STIGA

COLLECTOR 48 S (2021)

2L0482048/ST1

Spare parts list
Reservdelar
Repuestos
Ersatzteile
Pièces détachées
Reserve onderdelen
Catalogo ricambi

● Use ST. S.p.A. Genuine Spare Parts specified in the parts list for repair and/or replacement.
● The contents described in the parts list may change due to improvement.
● The drawings of the spare parts are only indicative And might Not represent the part in question exactly.
● The indications "right" - "left" - "front" - "rear" refer to the position of the operator when using the machine.
● When placing orders of parts for repair And/Or replacement, make sure that the illustrated parts list Is the one applying to the machine's year of manufacture, as shown on the identification plate attached to the machine.

All rights reserved. No part Of this material may be reproduced Or transmitted, in any form Or by any means, electronic Or mechanical, including photocopying, recording Or by any information storage And retrieval system, without permision in writing from ST. S.p.A.

Copyright ST. S.P.A.

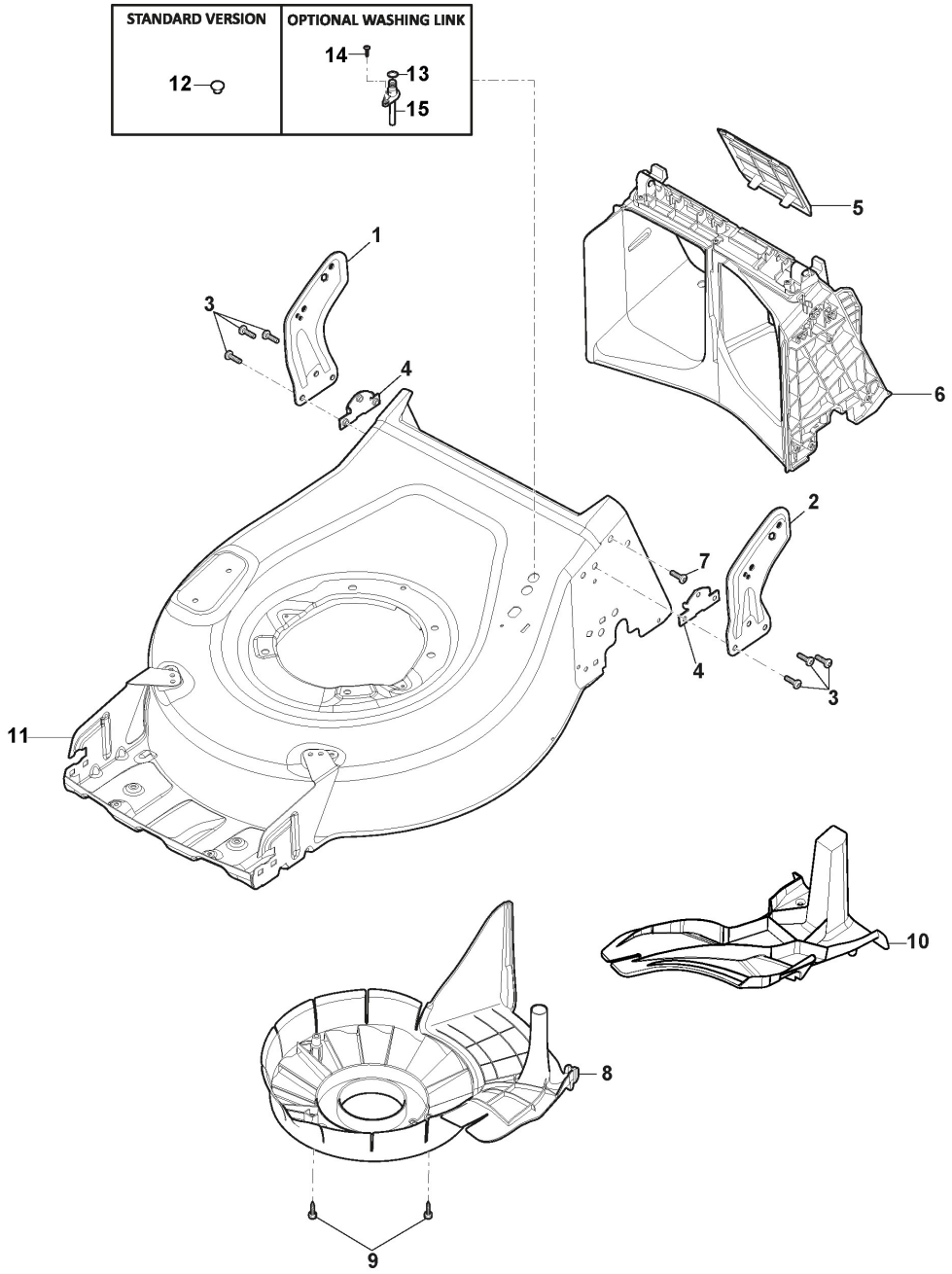

Copyright ST. S.P.A.

Deck

Ref.nr.	Qty	Item number	Description	Notes	From	Up to
1	1	381005235/2	Bracket-Rh	Grey Pearl		
2	1	381005237/2	Bracket-Lh	Grey Pearl		
3	6	112727802/0	Screw			
4	2	322545213/0	Plate			
5	1	322600310/0	Rear door	Only for Electric Start Engine with ION battery		
6	1	322108329/0	Rear Conveyor			
7	2	112728697/0	Screw			
8	1	322060242/2	Belt Protection	As Optional		
9	2	112728531/0	Screw	As Optional		
10	1	322140250/0	Mulching Deflector	As Optional		
11	1	381005027/0	Grey Deck			
12	1	322820077/1	Cap			
13	1	119035000/0	Or Ring			
14	1	112728450/0	Screw			
15	1	322034002/0	Washing Connection			

Copyright ST. S.P.A.

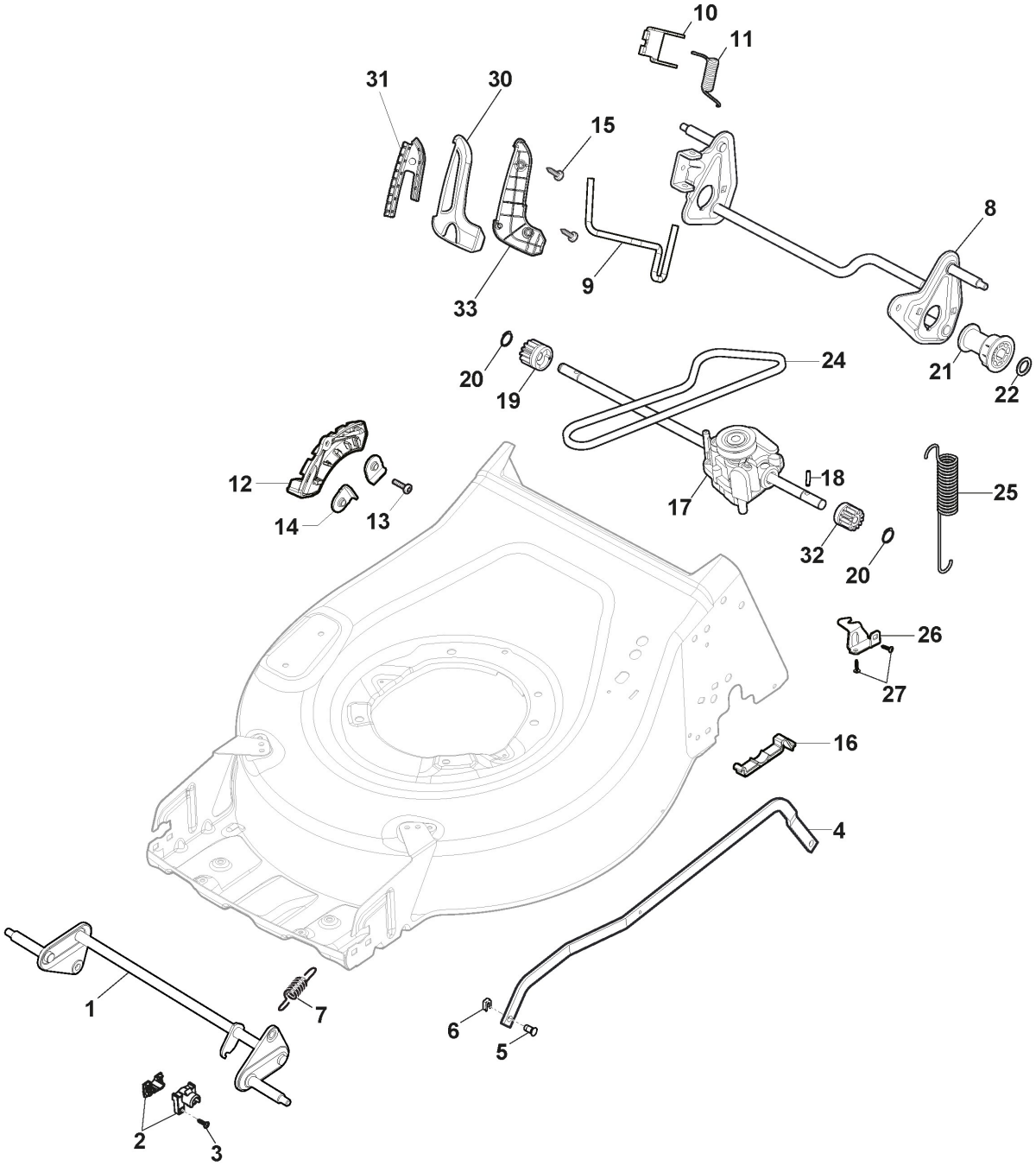

Copyright ST. S.P.A.

Height Adjusting

Ref.nr.	Qty	Item number	Description	Notes	From	Up to
1	1	381302935/0	Axle, Front Wheels			To S/N 20BA2WBH 045270
1	1	381302935/1	Axle, Front Wheels		From S/N	
2	2	322785305/1	Support			
3	4	112728697/0	Screw			
4	1	322869733/0	Rod, Height Adjustment			To S/N 20BA2WBH 048299
4	1	322869733/1	Rod, Height Adjustment		From S/N	
5	2	122519823/0	Pin			
6	2	112436051/0	Plate			
7	1	122450494/0	Spring			
8	1	381302851/0	Rear Wheel Axle			To S/N
8	1	381302851/1	Rear Wheel Axle		From S/N 20BA2WBH 045271	
9	1	322321553/0	Lever, Height Adjustment			
10	1	322557179/0	Plate			
11	1	122446198/1	Spring			
12	1	322735608/0	Sector, Height Adjustment			
13	2	112727802/0	Screw			
14	2	322545232/0	Plate			To S/N 19BA2WBH 031003
14	2	322545232/1	Plate		From S/N	To S/N
14	2	322545232/2	Plate		From S/N 20DA2WB H028505	
15	2	112728696/0	Screw			
16	2	322785500/0	Support			
17	1	181003114/0	Gear Box			
18	2	122753000/0	Pin			
19	1	122570110/1	Right Pinion			
20	4	112608600/0	Seeger			
21	2	322042066/0	Bushing			
22	2	112521371/0	Washer			
24	1	1111-9123-01	Drive Belt	Stiga Packed into 135063800/0		
24	1	135063800/0	Trapezoidal Belt			
25	1	122430254/0	Spring			
26	1	322778473/1	Bracket			
27	2	112728699/0	Screw			
30	1	322394552/0	Upper Handgrip	Grey NCS S8000-N		
31	1	322394551/0	Handgrip			
32	1	122570120/1	Left Pinion			
33	1	322394560/0	Lower Handgrip	Grey NCS S8000-N		

Copyright ST. S.P.A.

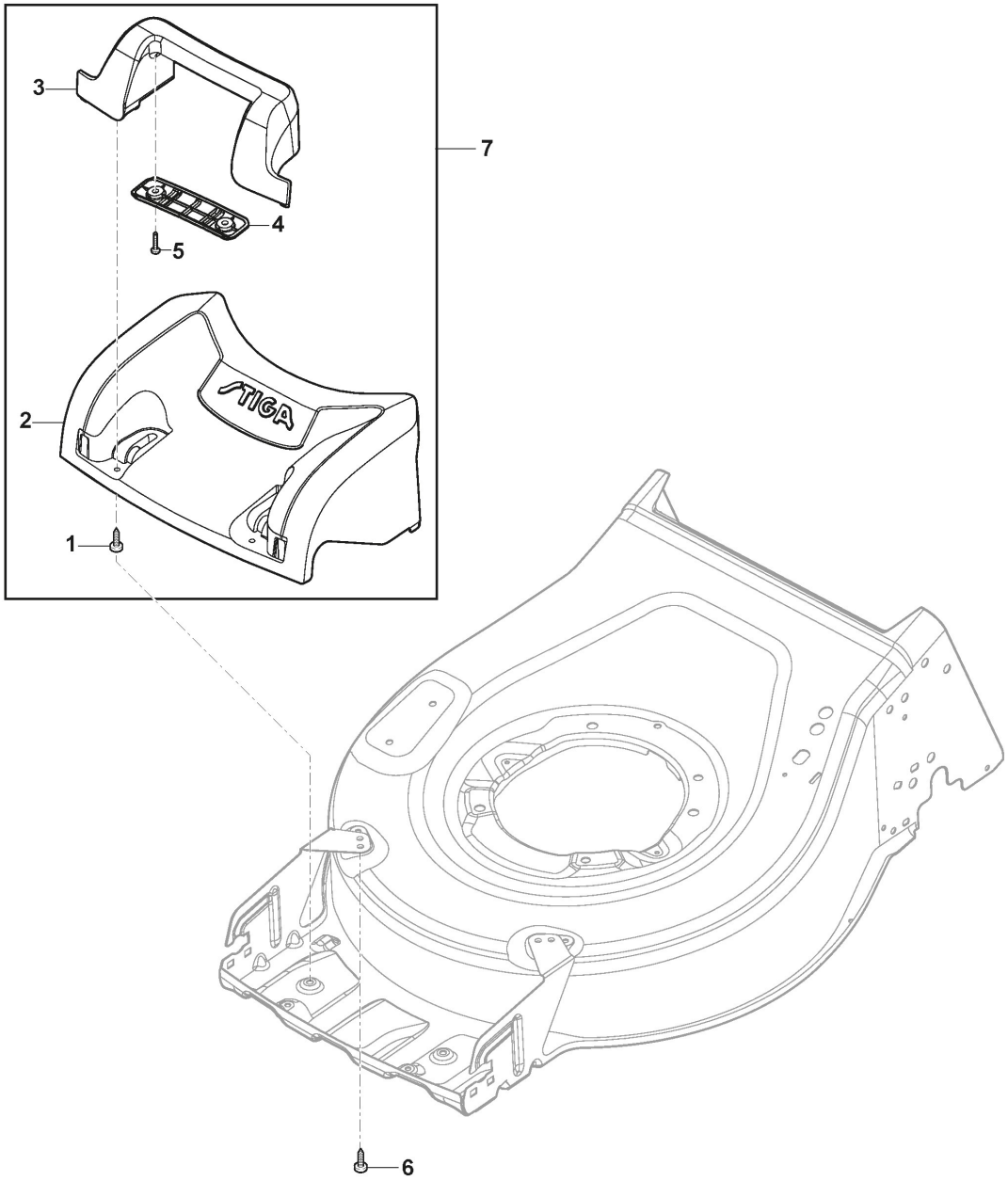

Copyright ST. S.P.A.

Mask

Ref.nr.	Qty	Item number	Description	Notes	From	Up to
1	2	112728689/0	Screw			
2	1	322226275/0	Mask, Grey			
3	1	322393779/0	Handle			
4	1	322393756/0	Front Handle Grip			
5	2	112728689/0	Screw			
6	2	112728702/0	Screw			
7	1	381390130/0	Plastic Frontal Assy, Grey NCS			

Copyright ST. S.P.A.

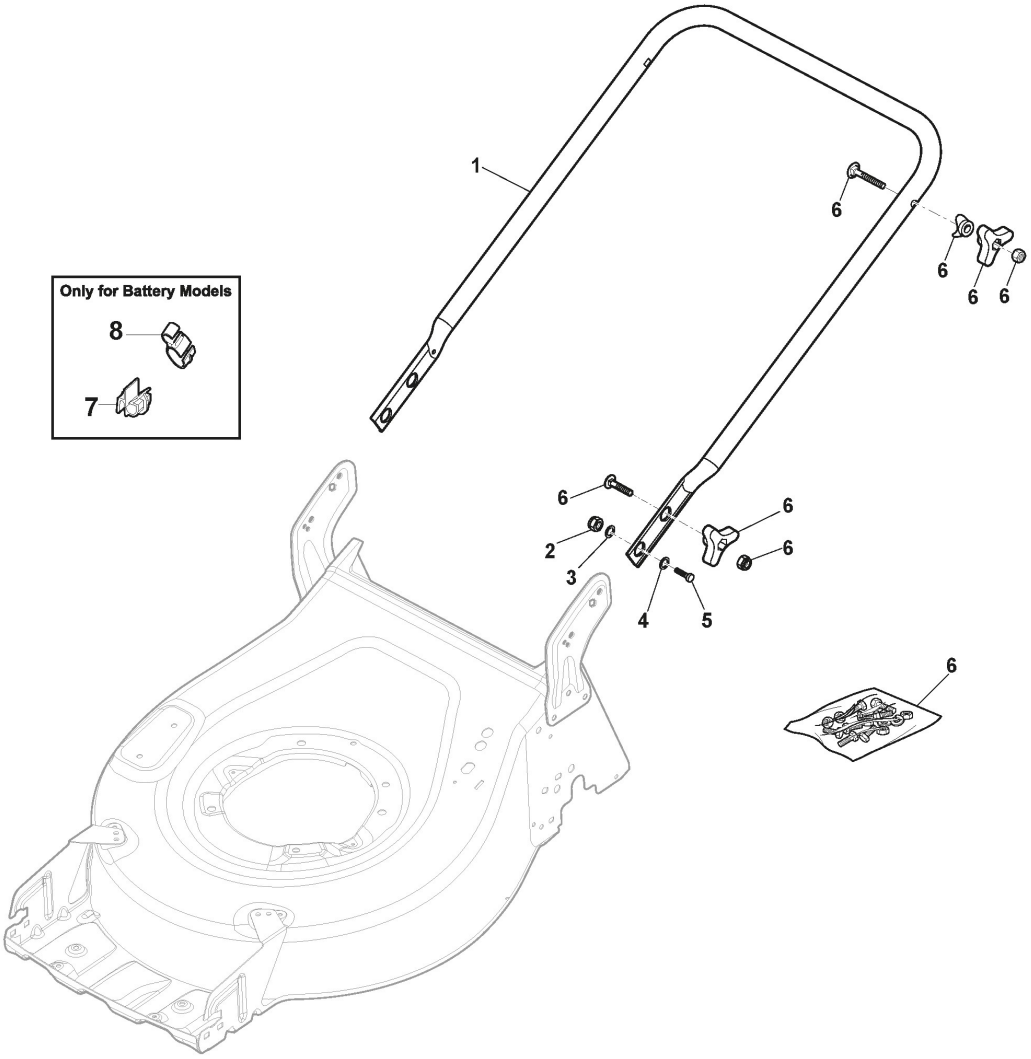

Copyright ST. S.P.A.

Handle, Lower Part

Ref.nr.	Qty	Item number	Description	Notes	From	Up to
1	1	381007537/0	Handle, Lower Part Yellow	Yellow		
2	2	112155000/0	Nut			
3	2	112521350/0	Washer			
4	2	112369500/0	Elastic Washer			
5	2	112760605/0	Screw			
6	1	381008691/0	Outfit, Screws	Black		
7	2	133320504/0	Fairlead	Only for Battery Models		
8	1	118390020/0	Conduit Clip	Only for Battery Models		

Copyright ST. S.P.A.

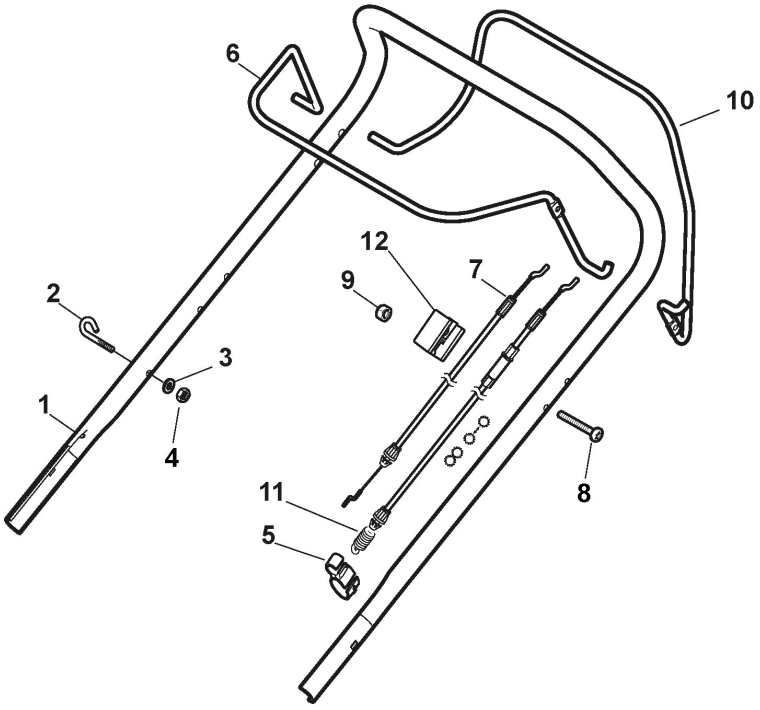

Copyright ST. S.P.A.

Handle, Upper Part

Ref.nr.	Qty	Item number	Description	Notes	From	Up to
1	1	381006753/1	Handle, Upper Part Yellow	Yellow without Sponge		
1	1	381006754/2	Handle, Yellow Upper Part with sponge handgrip	Yellow with Sponge		
2	1	122430313/0	Guide Spring	Not for IS Engine		
3	1	112521330/0	Washer	Not for IS Engine		
4	1	112154510/0	Nut	Not for IS Engine		
5	1	118390020/0	Conduit Clip			
6	1	181003363/1	Lever, Engine Brake Black	Black		
7	1	181030054/0	Cable, Thread Engine Brake			
8	1	112727783/0	Screw			
9	1	112154510/0	Nut			
10	1	181003364/0	Drive Control Lever	Black		
11	1	381030092/1	Cable Rear Drive			
12	1	322551640/0	Cable Holder			To S/N 20AA2WBH 066503
12	1	322551685/0	Cable Holder ø22		From S/N 20AA2WBH 066504	

Copyright ST. S.P.A.

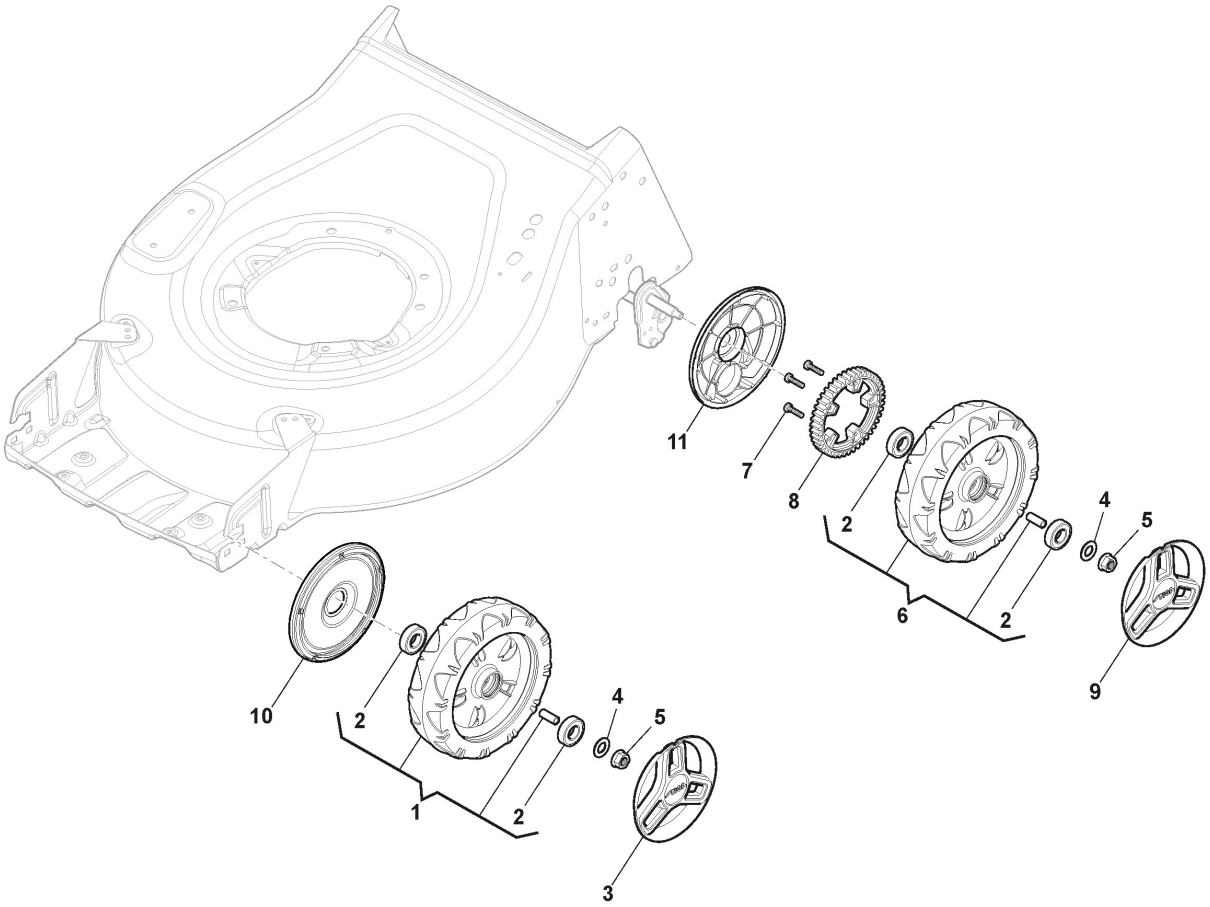

Copyright ST. S.P.A.

Wheel and Hub Cap

Ref.nr.	Qty	Item number	Description	Notes	From	Up to
1	2	381007416/2	Wheel Ø 200	Only bearings NOT bushings		To S/N 19JA2WBH 009252
1	2	381007416/3	Wheel Ø 200	Only bearings NOT bushings	From S/N 19JA2WBH	
2	8	119216035/0	Bearing			
3	2	322110744/0	Hub Cap Grey			
4	4	112521350/0	Washer			
5	4	112155000/0	Nut			
6	2	381007416/2	Wheel Ø 200	Only bearings NOT bushings		To S/N 19JA2WBH 009252
6	2	381007416/3	Wheel Ø 200	Only bearings NOT bushings	From S/N 19JA2WBH	
7	6	112728706/0	Screw			
8	2	322120114/0	Wheels Crown			
9	2	322110744/0	Hub Cap Grey			
10	4	322600145/0	Protection, Wheel	As Optional		
11	4	322600239/0	Protection, Wheel			

Copyright ST. S.P.A.

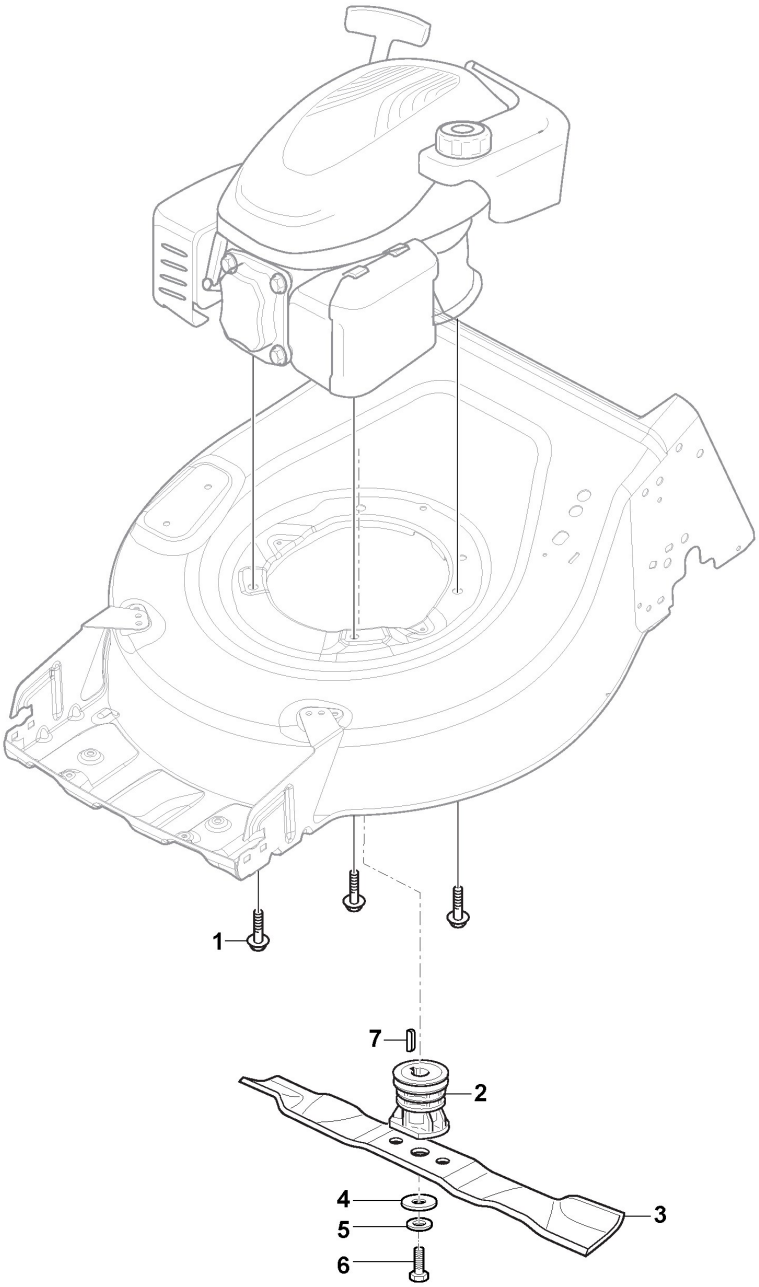

Copyright ST. S.P.A.

Blade

Ref.nr.	Qty	Item number	Description	Notes	From	Up to
1	3	112735108/1	Screw			
2	1	1111-9120-01	Blade Holder	Stiga Packed into 122465607/4		
2	1	122465607/4	Hub With Pulley, Crankshaft Ø 22.2			
3	1	1111-9121-02	Blade	Stiga Packed into 181004346/3		
3	1	181004346/3	Left Mulching, Blade			
4	1	122160400/0	Elastic Disc			
5	1	112523080/0	Washer			
6	1	112735698/0	Screw			
7	1	112139100/0	Key			

Copyright ST. S.P.A.

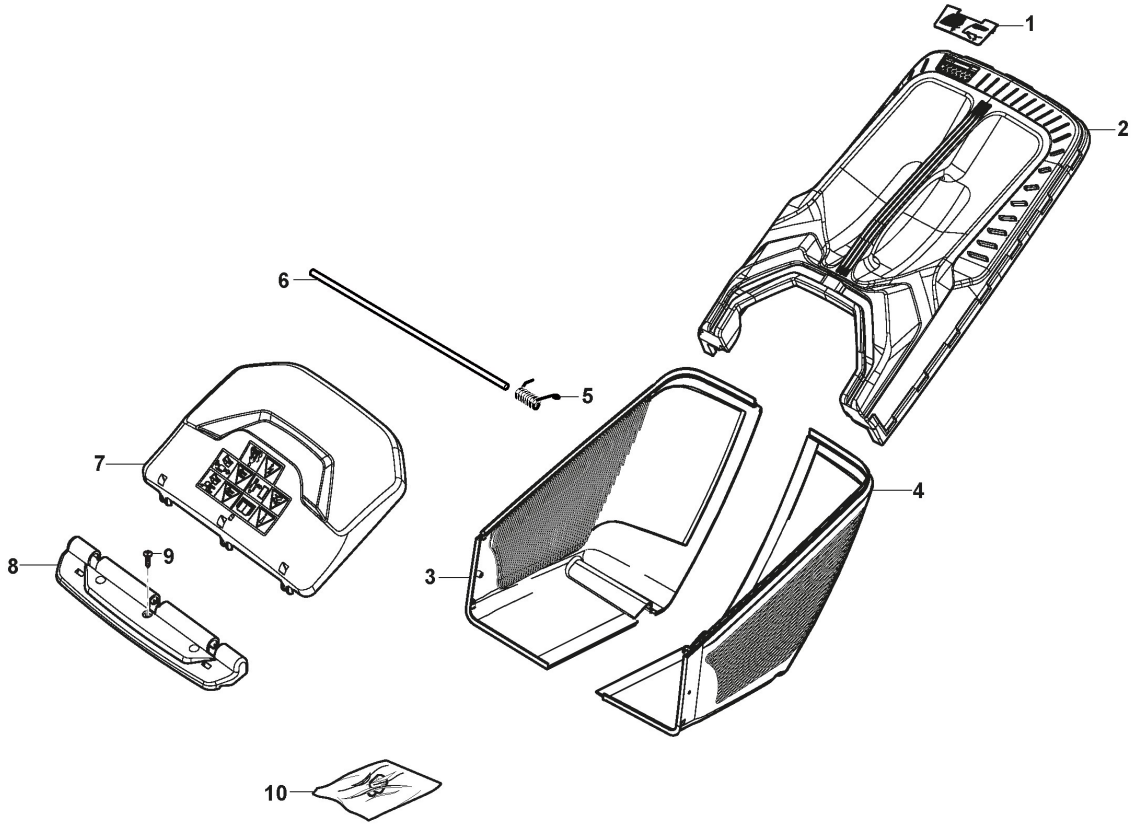

Copyright ST. S.P.A.

Grass-Catcher

Ref.nr.	Qty	Item number	Description	Notes	From	Up to
1	1	322486497/0	Rear door	Grey		
2	1	322486496/0	Grass-Box, Upper Part	Grey		
3	1	322486434/0	Grass-Box, Right Lower Part	Grey		
4	1	322486435/0	Grass-Box, Left Lower Part	Grey		
5	2	122450479/0	Spring			
6	1	122517884/0	Pin			
7	1	322600357/1	Stone Guard, Yellow	Yellow		
8	1	322109595/0	Stone Guard Support, Yellow	Yellow		
9	1	112728697/0	Screw			
10	1	381008735/0	Outfit, Plastic Pin	Only Plastic Pin - Plastic Pin is also available on the screw pocket		

Copyright ST. S.P.A.

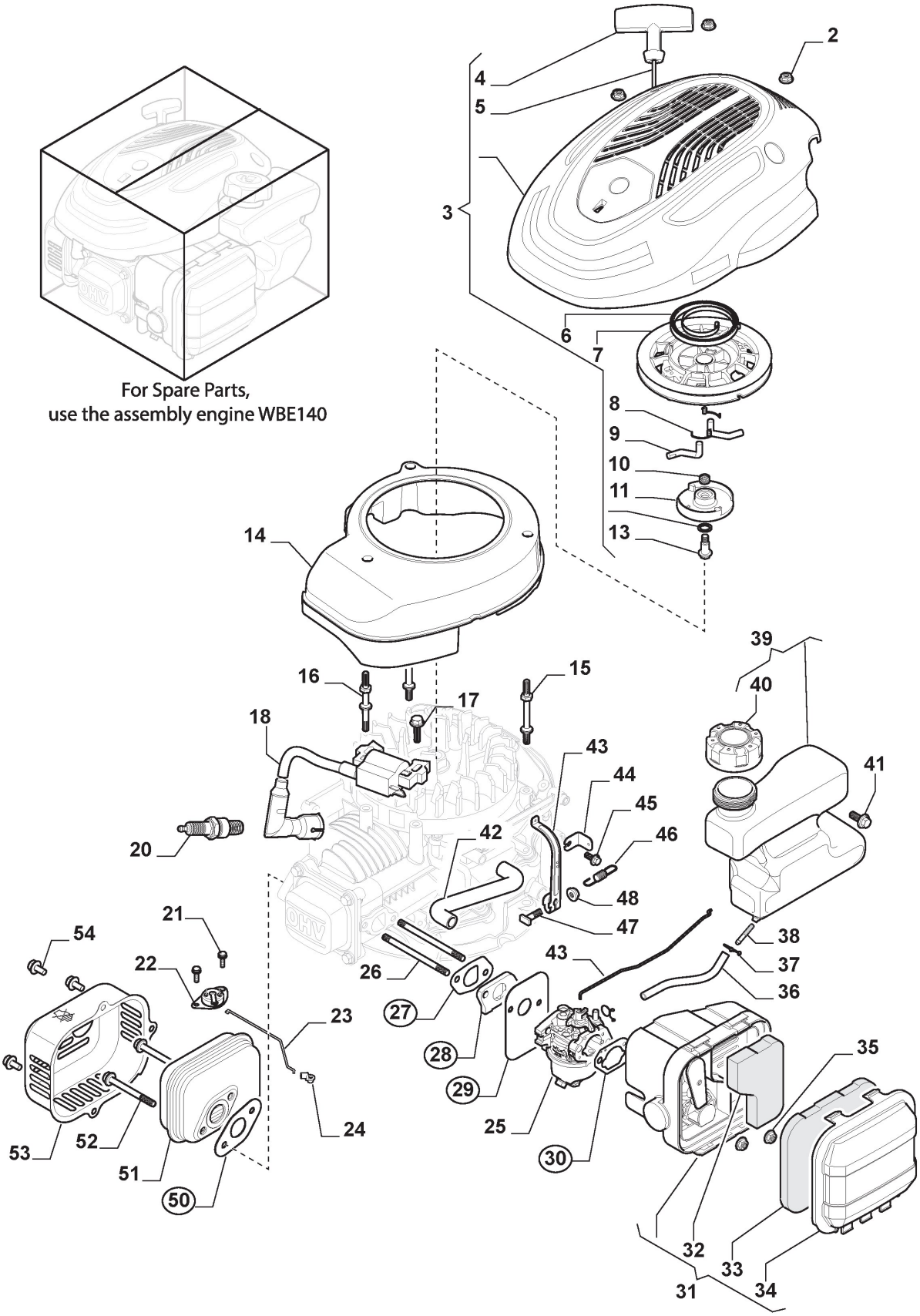

Copyright ST. S.P.A.

Engine - Carburettor, Tank

Ref.nr.	Qty	Item number	Description	Notes	From	Up to
2	3	112292102/0	Nut			
3	1	118551467/0	Starter Assy			
4	1	118551619/0	Starter Handle			
5	1	118550779/0	Starting Rope			
6	1	118551621/0	Starter Spring			
7	1	118551620/0	Starter Pulley			
8	2	118551626/0	Spring			
9	2	118551622/0	Ratchet, Starter			
10	1	118551625/0	Spring			
11	1	118551623/0	Cover			
13	1	118551624/0	Stud			
14	1	118550908/0	Air Guide			
15	2	118550907/0	Pin			
16	1	118550906/0	Pin			
17	1	112791500/0	Screw			
18	1	118551475/0	Elettronic Coil			
20	1	9400-0244-00	Spark Plug			
21	2	112789000/0	Screw			
22	1	118551456/0	Choke Control			
23	1	118551459/0	Control Rod			
24	1	118551352/0	Retainer			
25	1	118551489/0	Carburettor			
26	2	118550930/0	Stud Bolt			
27	1	118550929/0	Gasket			
28	1	118550928/0	Insulator, Carburettor			
29	1	118550927/0	Gasket			
30	1	118550924/0	Gasket			
31	1	118551461/0	Air Cleaner Assy			
32	1	118550946/0	Air Filter			
33	1	118550945/0	Air Filter			
34	1	118550944/0	Air Cleaner Cover			
35	2	112292102/0	Nut			
36	1	118551481/0	Fuel Pipe			
37	2	118550918/0	Pipe Clip			
38	1	118550314/0	Fuel Filter			
39	1	118551454/0	Tank			
40	1	118550943/0	Fuel Cap			
41	2	112792099/0	Screw			
42	1	118550920/0	Breather Fuel Pipe			
43	1	118550933/0	Arm Governor			
44	1	118550931/0	Plate			
45	1	112789000/0	Screw			
46	1	118550932/0	Spring			
47	1	118550805/0	Screw			
48	1	118550806/0	Nut			

Copyright ST. S.P.A.

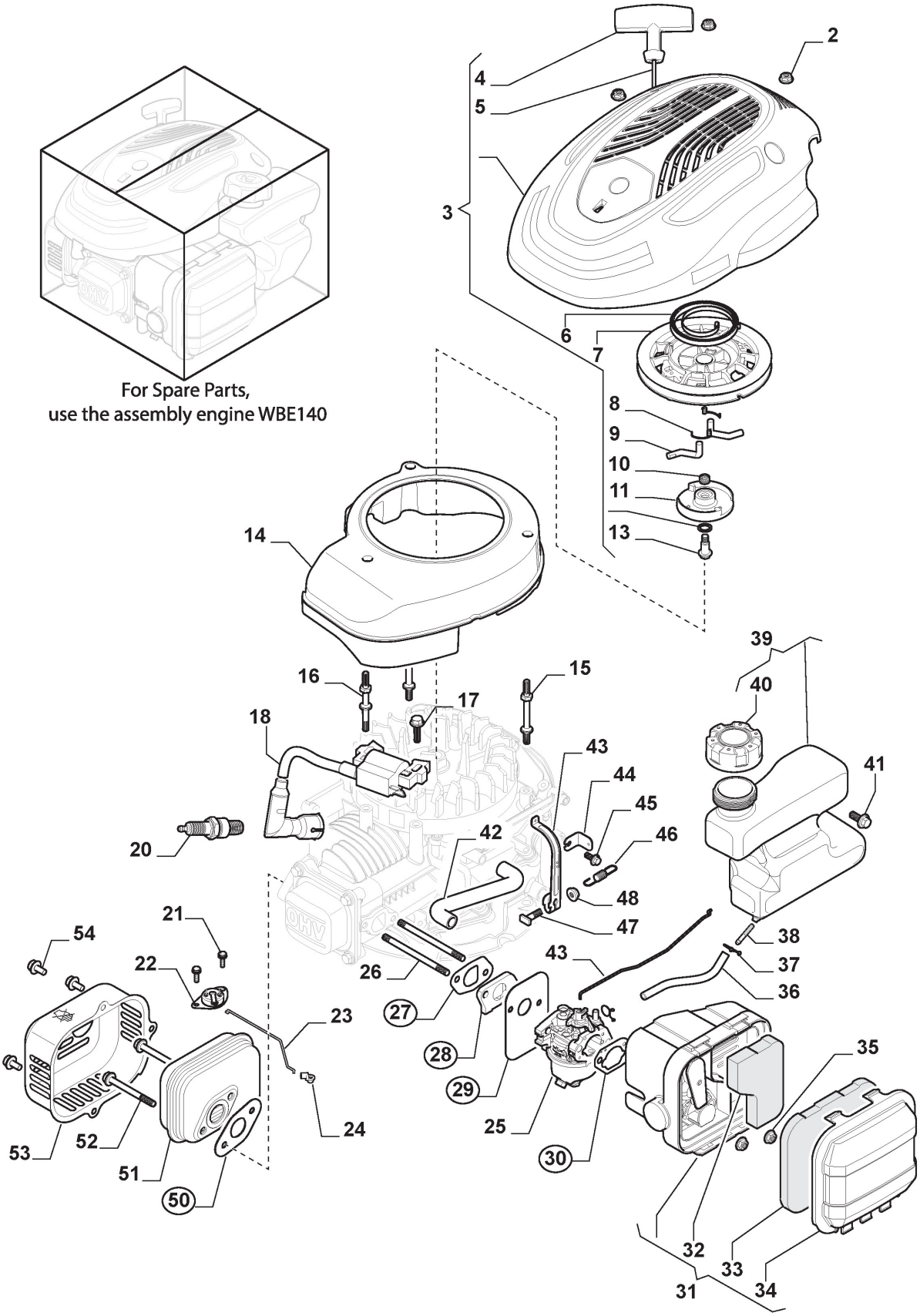

Copyright ST. S.P.A.

Ref.nr.	Qty	Item number	Description	Notes	From	Up to
49	1	118550925/0	Governor Link			
50	1	118550898/0	Gasket, Muffler			
51	1	118551464/0	Muffler			
52	2	112792425/0	Screw			
53	1	118550900/0	Muffler Guard			
54	3	118551277/0	Bolt			

Copyright ST. S.P.A.

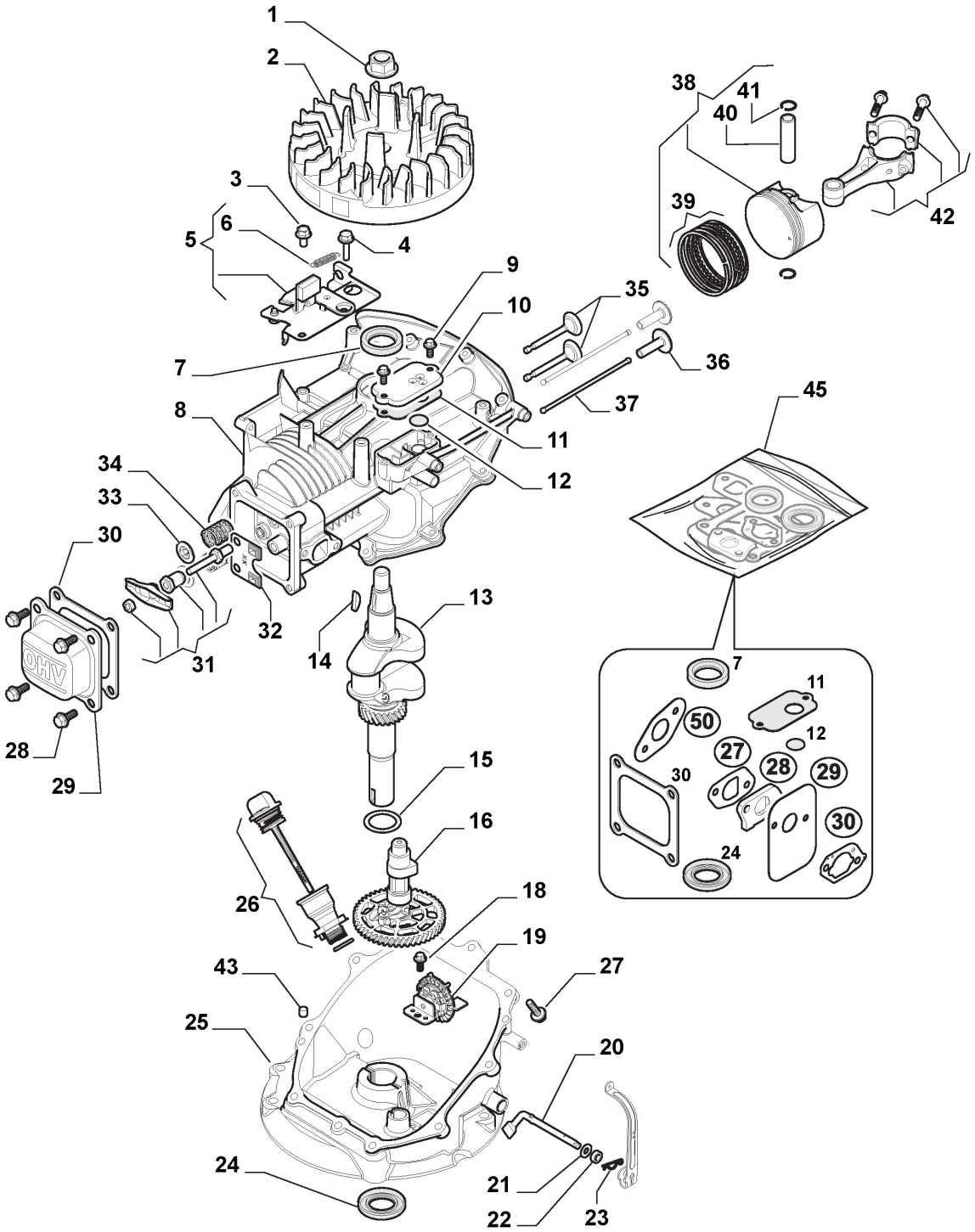

Copyright ST. S.P.A.

Engine - Piston, Crankshaft

Ref.nr.	Qty	Item number	Description	Notes	From	Up to
1	1	118550336/0	Nut			
2	1	118550905/0	Flywheel Ass.Y			
3	1	118551277/0	Bolt			
4	1	112791500/0	Screw			
5	1	118551483/0	Flywheel Brake/Stop Switch Assy			
6	1	118550911/0	Spring			
7	1	118550300/0	Oil Seal			
8	1	118550897/0	Cylinder Assy			
9	2	112789000/0	Screw			
10	1	118550904/0	Cover			
11	1	118550903/0	Gasket, Breath Groove			
12	1	118550902/0	Valve			
13	1	118551488/0	Crankshaft			
14	1	118550288/0	Woodruff Key			
15	1	118550283/0	Washer			
16	1	118550890/0	Camshaft Assy			
18	1	112789000/0	Screw			
19	1	118550888/0	Speed Governor Assy			
20	1	118550936/0	Shaft, Governor Arm			
21	1	118550666/0	Washer			
22	1	118550935/0	Oil Seal			
23	1	118550856/0	Cotter Pin			
24	1	118550379/0	Oil Seal			
25	1	118551209/0	Crankcase Cover			
26	1	118550887/0	Tank Cap			
27	10	112791500/0	Screw			
28	4	118551276/0	Bolt			
29	1	118550891/0	Cover Comp., Head			
30	1	118550892/0	Packing Head Cover			
31	2	118550893/0	Valve Arm Set			
32	1	118550894/0	Plate			
33	2	118550895/0	Retainer			
34	2	118550896/0	Spring			
35	1	118550910/0	Valve Assy, Intake + Exhaust			
36	2	118550291/0	Valve Lifter Assy			
37	2	118550912/0	Push Rod			
38	1	118551482/0	Piston			
39	1	118551445/0	Piston, Ring Set			
40	1	118550915/0	Piston Pin			
41	2	118550914/0	Washer, Piston Pin			
42	1	118551487/0	Connecting Rod Assy			
43	2	118551223/0	Grub Screw			
45	1	118550940/0	Engine Gasket Set			

Copyright ST. S.P.A.

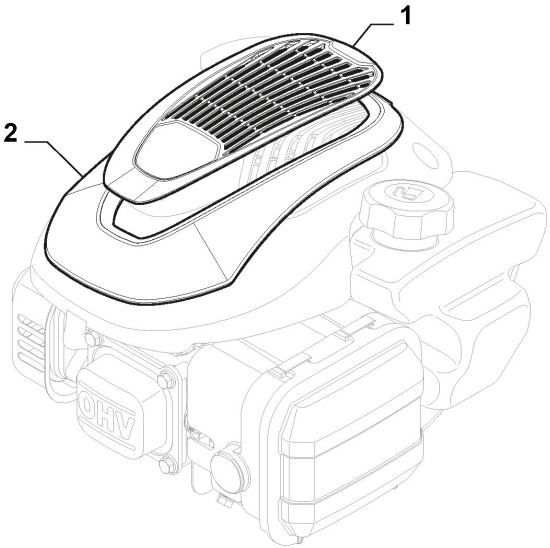

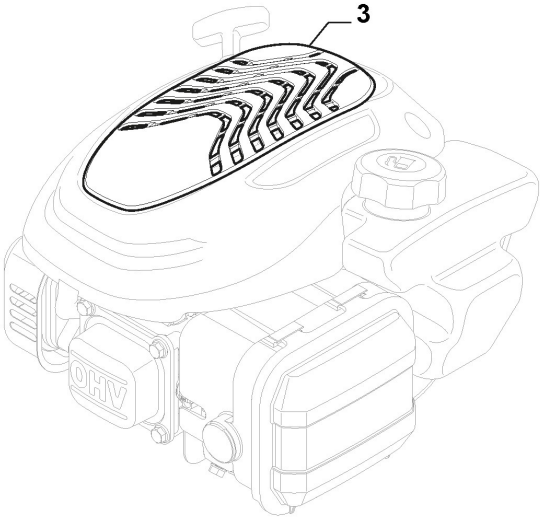

Copyright ST. S.P.A.

Engine Cover

Ref.nr.	Qty	Item number	Description	Notes	From	Up to
1	1	322055629/0	Grey Cover			
2	1	322055630/0	Hood, Yellow			
3	1	322055627/0	Grey Cover			

Copyright ST. S.P.A.