HUSKY®
Keeping our customers in the lead

# Supplier Quick Reference

## Common Drawing Features and Manufacturing Practices

All dimensions in millimeters unless otherwise specified

## 1) Scope and Purpose

This document is a quick reference for Husky Suppliers. It is designed to complement drawings that do not fully describe specific component features. This document is not intended to replace or supersede drawing specifications: Full detail of these features is obtained by combining the drawing with the quick reference information. The quick reference is applicable on drawings where designated as follows: UNDEFINED DRAWING FEATURES TO COMPLY WITH HS534 "SUPPLIER QUICK REFERENCE"

## 2) Metric Counterbore Holes

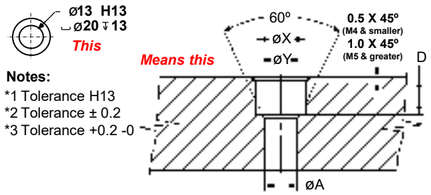


**Notes:**
*1 Tolerance H13
*2 Tolerance ± 0.2
*3 Tolerance +0.2 -0

| Screw Size | Drill Size øA*1 | Counterbore Diameter øX*2 | Countersink Diameter øY*3 | Counterbore Depth D*2 |
|---|---|---|---|---|
| | Nom. | Nom. | Min. | Nom. |
| M1.6 | 1.8 | 3.5 | 2.0 | 1.8 |
| M2 | 2.4 | 4.2 | 2.6 | 2.2 |
| M2.5 | 2.9 | 5.0 | 3.1 | 2.7 |
| M3 | 3.4 | 6.0 | 3.6 | 3.4 |
| M4 | 4.5 | 8.0 | 4.7 | 4.6 |
| M5 | 5.5 | 10.0 | 5.7 | 5.7 |
| M6 | 6.6 | 11.0 | 6.8 | 6.8 |
| M8 | 9.0 | 15.0 | 9.2 | 9.0 |
| M10 | 11.0 | 18.0 | 11.2 | 11.0 |
| M12 | 13.0 | 20.0 | 14.2 | 13.0 |
| M16 | 17.0 | 26.0 | 18.2 | 17.5 |
| M20 | 21.0 | 33.0 | 22.4 | 21.5 |
| M24 | 25.0 | 38.0 | 26.4 | 25.5 |
| M30 | 31.0 | 48.0 | 33.4 | 31.5 |
| M36 | 37.0 | 57.0 | 39.4 | 37.5 |
| M42 | 43.0 | 66.0 | 45.6 | 43.5 |
| M48 | 49.0 | 75.0 | 52.6 | 50.0 |

## 3) Counterbore Holes for Metric LHCS

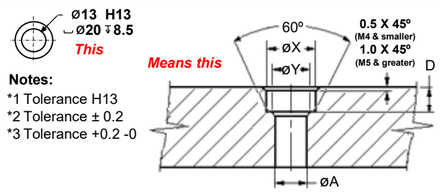


**Notes:**
*1 Tolerance H13
*2 Tolerance ± 0.2
*3 Tolerance +0.2 -0

| Screw Size | Drill Size øA*1 | Counterbore Diameter øX*2 | Countersink Diameter øY*3 | Counterbore Depth D*2 |
|---|---|---|---|---|
| | Nom. | Nom. | Min. | Nom. |
| M3 | 3.4 | 6.0 | 3.6 | 2.4 |
| M4 | 4.5 | 8.0 | 4.7 | 3.2 |
| M5 | 5.5 | 10.0 | 5.7 | 4.0 |
| M6 | 6.6 | 11.0 | 6.8 | 4.7 |
| M8 | 9.0 | 15.0 | 9.2 | 6.0 |
| M10 | 11.0 | 18.0 | 11.2 | 7.0 |
| M12 | 13.0 | 20.0 | 14.2 | 8.5 |
| M16 | 17.0 | 26.0 | 18.2 | 10.5 |
| M20 | 21.0 | 33.0 | 22.4 | 13.0 |

## 4) Metric Countersink Holes

| Screw Size | Drill Size øA*1 | Countersink Diameter øB*2 | Countersink Depth C |
|---|---|---|---|
| | Nom. | Nom. | For Ref. |
| M3 | 3.4 | 6.8 | 1.7 |
| M4 | 4.5 | 9.3 | 2.4 |
| M5 | 5.5 | 11.5 | 3.0 |
| M6 | 6.6 | 13.6 | 3.5 |
| M8 | 9 | 18.2 | 4.6 |
| M10 | 11 | 22.6 | 5.8 |
| M12 | 13 | 27.0 | 7.0 |
| M16 | 17 | 33.8 | 8.4 |
| M20 | 21 | 40.6 | 9.8 |

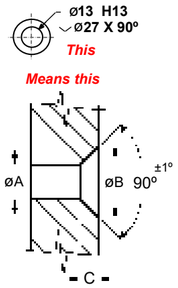


**Notes:**
*1 Tolerance H13
*2 Tolerance ± 0.2

## 5) Metric Clearance Holes

| Screw Size | Drill Size øA*1 | Countersink Diameter øY*2 |
|---|---|---|
| | Nom. | Nom. |
| M1.6 | 1.8 | 2.0 |
| M2 | 2.4 | 2.6 |
| M2.5 | 2.9 | 3.1 |
| M3 | 3.4 | 3.6 |
| M4 | 4.5 | 4.7 |
| M5 | 5.5 | 5.7 |
| M6 | 6.6 | 6.8 |
| M8 | 9.0 | 9.2 |
| M10 | 11.0 | 11.2 |
| M12 | 13.0 | 14.2 |
| M16 | 17.0 | 18.2 |
| M20 | 21.0 | 22.4 |
| M24 | 25.0 | 26.4 |
| M30 | 31.0 | 33.4 |
| M36 | 37.0 | 39.4 |
| M42 | 43.0 | 45.6 |
| M48 | 49.0 | 52.6 |

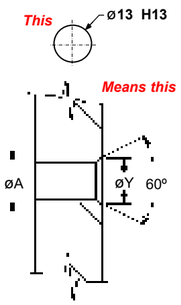


**Notes:**
*1 Tolerance H13
*2 Tolerance +0.2 -0

## 6) Metric Thread Installations

- General purpose. "Type 1" tapped holes (HS 259)
- ISO965 threads, coarse pitch
- Tolerance class 6H

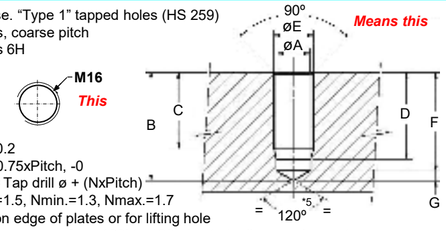


**Notes:**
*1 Tolerance ±0.2
*2 Tolerance +0.75xPitch, -0
*3 Chamfer ø = Tap drill ø + (NxPitch)
With Nnom.=1.5, Nmin.=1.3, Nmax.=1.7
*4 Not for use on edge of plates or for lifting hole
*5 Drill tip angle may vary from 120˚ to 180˚ due to tooling requirements

| Thread | Pitch | Tap Drill øA | | | B*1 | Tapping C*2 | D*2 | Chamfer øE*3 | | For Ref. F | G |
|---|---|---|---|---|---|---|---|---|---|---|---|
| | Nom. | Nom. | Max. | Min. | Nom. | Nom. | Min. | Nom. | Tol. | Nom. | Nom. |
| M3 | 0.5 | 2.5 | 2.599 | 2.459 | 9.5 | 6 | 7.5 | 3.25 | ±0.1 | 8.778 | 0.722 |
| M4 | 0.7 | 3.3 | 3.422 | 3.242 | 12.5 | 8 | 10.1 | 4.35 | ±0.14 | 11.547 | 0.953 |
| M5 | 0.8 | 4.2 | 4.334 | 4.134 | 16 | 10 | 12.4 | 5.4 | ±0.16 | 14.788 | 1.212 |
| M6 | 1 | 5 | 5.153 | 4.917 | 18.5 | 12 | 15 | 6.5 | ±0.2 | 17.057 | 1.443 |
| M8 | 1.25 | 6.75 | 6.912 | 6.647 | 24 | 16 | 19.75 | 8.625 | ±0.25 | 22.051 | 1.949 |
| M10 | 1.5 | 8.5 | 8.676 | 8.376 | 30 | 20 | 24.5 | 10.75 | ±0.3 | 27.546 | 2.454 |
| M12 | 1.75 | 10.25 | 10.441 | 10.106 | 35 | 24 | 29.25 | 12.875 | ±0.35 | 32.041 | 2.959 |
| M16 | 2 | 14 | 14.21 | 13.835 | 45 | 32 | 38 | 17.0 | ±0.4 | 40.959 | 4.041 |
| M20*4 | 2.5 | 17.5 | 17.744 | 17.294 | 56 | 40 | 47.5 | 21.25 | ±0.5 | 50.948 | 5.052 |
| M24 | 3 | 21 | 21.252 | 20.752 | 67 | 48 | 57 | 25.5 | ±0.6 | 60.938 | 6.062 |
| M30 | 3.5 | 26.5 | 26.771 | 26.211 | 83 | 60 | 70.5 | 31.75 | ±0.7 | 75.35 | 7.65 |
| M36 | 4 | 32 | 32.27 | 31.67 | 98 | 72 | 84 | 38.0 | ±0.8 | 88.762 | 9.238 |
| M42 | 4.5 | 37.5 | 37.799 | 37.129 | 114 | 84 | 97.5 | 44.25 | ±0.9 | 103.175 | 10.825 |
| M48 | 5 | 43 | 43.297 | 42.587 | 130 | 96 | 111 | 50.5 | ±1.0 | 117.587 | 12.413 |
| M56 | 5.5 | 50.5 | 50.796 | 50.046 | 150 | 112 | 128.5 | 58.75 | ±1.1 | 135.422 | 14.578 |

## 7) Counterbore Holes for Inch LHCS

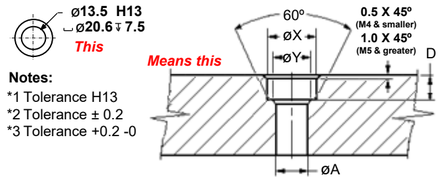


**Notes:**
*1 Tolerance H13
*2 Tolerance ± 0.2
*3 Tolerance +0.2 -0

All dimensions in millimeters unless otherwise specified

| Screw Size | | Drill Size øA*1 | Counterbore Diameter øX*2 | Countersink Diameter øY*3 | Counterbore Depth D*2 |
|---|---|---|---|---|---|
| Inch | Inch | Nom. | Nom. | Min. | Nom. |
| #4 | 0.1120 | 3.5 | 5.5 | - | 2.0 |
| #8 | 0.1640 | 4.9 | 8.0 | - | 2.5 |
| #10 | 0.1900 | 5.6 | 9.5 | - | 3.0 |
| 1/4 | 0.2500 | 7.1 | 11.1 | - | 4.0 |
| 5/16 | 0.3125 | 8.7 | 13.5 | - | 5.0 |
| 3/8 | 0.0375 | 10.3 | 15.9 | 10.5 | 6.0 |
| 1/2 | 0.5000 | 13.5 | 20.6 | 14.0 | 7.5 |

## 8) NPT / NPTF Pipe Threads

ANSI/ASME B1.20.1

- NPT – National Pipe Thread Taper
- NPTF – Dryseal American National Standard Taper Pipe Thread
- Sealant required on NPT
- 60° Thread Angle
- Pitch measured in inches
- Truncation of root and crest are flat
- Taper angle 1° 47' (taper 1:16)

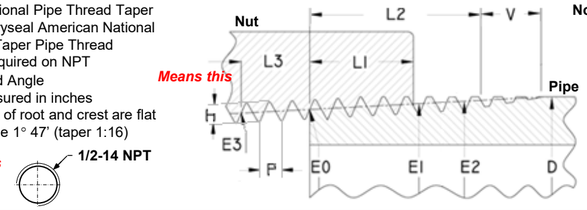


**Notes:**
*1 Truncation from point of thread triangle to flat (not displayed on drawing). Minimum = 0.033P for all pitches. See table for maximum. For NPTF threads, refer to ANSI B1.20.3 on limits on crest and root truncation
*2 Requires taper with reamer before tapping
*3 Tapping drills given for taper with reamer for NPT threads 1 1/4" and greater

Basic dimensions given to 5 or 6 decimal places to eliminate errors when calculating gauge dimensions (do not imply a greater degree of precision)

| NPT Thread (Inch) | Threads Per Inch | Outside Pipe Diameter øD | Pitch of Thread P | Height of Thread h | Truncation Max.*1 f | Pitch Diameter Start of Ext. Thread øE0 | Handtight Engagement Length L1 | Handtight Engagement Diameter øE1 | Effective Thread Length L2 | Effective Thread Diameter øE2 | Wrench Makeup Length, Internal Length L3 | Wrench Makeup Length, Internal Diameter øE3 | Vanish Thread Length V | Tapping Drills *3 Drill Size (Inch) | Tapping Drills *3 Eq. (mm) |
|---|---|---|---|---|---|---|---|---|---|---|---|---|---|---|---|
| 1/16" | 27 | 7.9375 | 0.940816 | 0.752602 | 0.09144 | 6.887972 | 4.064 | 7.141972 | 6.63194 | 7.3025 | 2.82194 | 6.711696 | 3.2639 | C | 6.1468 |
| 1/8" | 27 | 10.287 | 0.940816 | 0.752602 | 0.09144 | 9.233154 | 4.1148 | 9.48944 | 6.70306 | 9.652 | 2.82194 | 9.056624 | 3.2639 | Q | 8.4328 |
| 1/4" | 18 | 13.716 | 1.411224 | 1.128776 | 0.12446 | 12.125706 | 5.7912 | 12.487402 | 10.20572 | 12.7635 | 4.23418 | 11.861038 | 4.89712 | 7/16" | 11.1125 |
| 3/8" | 18 | 17.145 | 1.411224 | 1.128776 | 0.12446 | 15.545054 | 6.096 | 15.926054 | 10.35812 | 16.1925 | 4.23418 | 15.28064 | 4.89712 | 37/64" | 14.68374 |
| 1/2" | 14 | 21.336 | 1.814322 | 1.451356 | 0.14224 | 19.264122 | 8.128 | 19.772122 | 13.55598 | 20.111466 | 5.44322 | 18.924016 | 6.29412 | 45/64" | 17.85874 |
| 3/4" | 14 | 26.67 | 1.814322 | 1.451356 | 0.14224 | 24.579072 | 8.6106 | 25.117298 | 13.86078 | 25.445466 | 5.44322 | 24.238966 | 6.29412 | 29/32" | 23.02002 |
| 1" | 11 ½ | 33.401 | 2.208784 | 1.767078 | 0.16002 | 30.826202 | 10.16 | 31.461202 | 17.34312 | 31.91002 | 6.62686 | 30.412182 | 7.66318 | 1-9/32" | 32.54502 |
| 1 1/4" | 11 ½ | 42.164 | 2.208784 | 1.767078 | 0.16002 | 39.551102 | 10.668 | 40.217852 | 17.95272 | 40.67302 | 6.62686 | 39.137082 | 7.66318 | 1-15/32" | 37.30752 |
| 1 1/2" | 11 ½ | 48.26 | 2.208784 | 1.767078 | 0.16002 | 45.620686 | 10.2108 | 46.287436 | 18.3769 | 46.76902 | 6.62686 | 45.206412 | 7.66318 | 1-23/32" | 43.65752 |
| 2" | 11 ½ | 60.325 | 2.208784 | 1.767078 | 0.16002 | 57.633108 | 11.0744 | 58.325258 | 19.2151 | 58.83402 | 6.62686 | 57.219088 | 7.66318 | 2-5/32" | 54.77002 |
| 2 1/2" | 8 | 73.025 | 3.175 | 2.54 | 0.19812 | 69.076062 | 17.3228 | 70.15861 | 28.8925 | 70.881748 | 6.35 | 68.679314 | 11.01598 | 2-25/32" | 70.64502 |
| 3" | 8 | 88.9 | 3.175 | 2.54 | 0.19812 | 84.851748 | 19.4564 | 86.0679 | 30.48 | 86.756748 | 6.35 | 84.455 | 11.01598 | 3-9/32" | 83.34502 |

All dimensions in millimeters unless otherwise specified

## 9) SAE Straight Thread Ports

ISO 11926-1

**Notes:**
*1 Tolerance ±1.0. Exception: ±0.2 for SAE2 (1/8") plugs.
*2 Recommended drills as per HS 225.
*3 Tolerance +0.13 -0.00
Diameter d5 to be concentric with thread pitch diameter within 0.127mm. No longitudinal and spiral tool marks allowed. Annular marks up to 2.5µm permissible.
*4 Tolerance +0.4 -0.0
*5 Tap drill depths given require use of bottoming taps to produce specified full thread lengths.
*6 Recommended spotface depth. Tolerance +0.3 -0.2
*7 Full thread depth
*8 Tolerance ±1°
*9 Standard hydraulic applications: 90 durometer nitrile (N552-90)

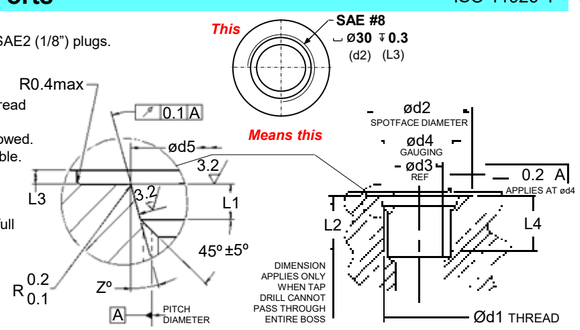


All dimensions in millimeters unless otherwise specified

| d1 INCH | d1 SAE # | Thread: Nominal Size (Inch) | Tap Drill Dia (mm) Min. | Tap Drill Dia (mm) Max. | ød2*1 Fittings & Plugs [Standard] | ød2*1 Plugs Only [Optional] | ød3*2 | ød4 | ød5*3 | L1*4 | L2*5 | L3*6 Fittings | L3*6 Plugs | L4*7 | Z*8 | O-Ring Size*9 |
|---|---|---|---|---|---|---|---|---|---|---|---|---|---|---|---|---|
| Nom. | Nom. | | | | Nom. | Nom. | Max. | Min. | Nom. | Nom. | Nom. | Nom. | Nom. | Min. | Nom. | |
| 1/8" | -2 | 5/16-24 UNF-2B | 6.78 | 7.04 | 17 | 12 | 6.35 | 11 | 9.1 | 1.9 | 12 | 0.3 | 3.5 | 10 | 12° | 3-902 |
| 1/4" | -4 | 7/16-20 UNF-2B | 9.73 | 10.03 | 21 | 16 | 8.7 | 15 | 12.4 | 2.4 | 14 | 0.3 | 3.5 | 11.5 | 12° | 3-904 |
| 5/16" | -5 | 1/2-20 UNF-2B | 11.32 | 11.60 | 23 | 19 | 11.2 | 16 | 14 | 2.4 | 14 | 0.3 | 3.5 | 11.5 | 12° | 3-905 |
| 3/8" | -6 | 9/16-18 UNF-2B | 12.75 | 13.08 | 25 | 21 | 11.2 | 18 | 15.6 | 2.5 | 15.5 | 0.3 | 3.5 | 12.7 | 12° | 3-906 |
| 1/2" | -8 | 3/4-16 UNF-2B | 17.32 | 17.68 | 30 | 24 | 16 | 22 | 20.6 | 2.5 | 17.5 | 0.3 | 5 | 14.3 | 15° | 3-908 |
| 5/8" | -10 | 7/8-14 UNF-2B | 20.27 | 20.68 | 34 | 28 | 20 | 26 | 23.9 | 2.5 | 20 | 0.3 | 5 | 16.7 | 15° | 3-910 |
| 3/4" | -12 | 1 1/16-12 UN-2B | 24.69 | 25.15 | 41 | 34 | 20 | 32 | 29.2 | 3.3 | 23 | 0.3 | 5 | 19 | 15° | 3-912 |
| 7/8" | -14 | 1 3/16-12 UN-2B | 27.86 | 28.32 | 45 | 38 | 25 | 35 | 32.3 | 3.3 | 23 | 0.3 | 5 | 19 | 15° | 3-914 |
| 1" | -16 | 1 5/16-12 UN-2B | 31.04 | 31.50 | 49 | 42 | 30 | 38 | 35.5 | 3.3 | 23 | 0.3 | 5 | 19 | 15° | 3-916 |
| 1 1/4" | -20 | 1 5/8-12 UN-2B | 38.99 | 39.45 | 58 | 50 | 38 | 48 | 43.5 | 3.3 | 23 | 0.3 | 5 | 19 | 15° | 3-920 |
| 1 1/2" | -24 | 1 7/8-12 UN-2B | 45.34 | 45.80 | 65 | 58 | 45 | 54 | 49.8 | 3.3 | 23 | 0.3 | 5 | 19 | 15° | 3-924 |
| 2" | -32 | 2 1/2-12 UN-2B | 61.21 | 61.67 | 88 | 75 | 50 | 70 | 65.7 | 3.3 | 23 | 0.3 | 5 | 19 | 15° | 3-932 |

## 10) Four-Bolt Split Flange Ports

ISO 6162

**Notes:**
*1 Code 61: 2.5 MPa to 35 MPa series
Code 62: 40 MPa series
*2 Tolerance +0, -1.5 As per ISO 6162
*3 Tolerance ±0.25
*4 Radius
*5 Dimensions AA, BB, and CC provide 1.5mm clearance between same size flanges
*6 Four general purpose "type 1" tapped holes (as per HS 259).
*7 Minimum full thread depth - For reference only.

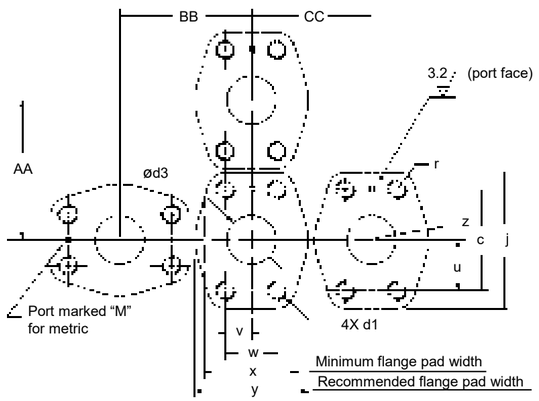


| Port Size INCH | Port Size SAE # | Code*1 | ød3*2 | w*3 | v*3 | c*3 | u*3 | y | j | x | z*4 | r*4 | AA*5 | BB*5 | CC*5 | d1*6 | t1*7 |
|---|---|---|---|---|---|---|---|---|---|---|---|---|---|---|---|---|---|
| Nom. | Nom. | | Nom. | Nom. | Nom. | Nom. | Nom. | Max. | Nom. | Min. | Nom. | Nom. | Min. | Min. | Min. | Nom. | Min. |
| 3/4" | -12 | 61 | 19.1 | 22.3 | 11.15 | 47.6 | 23.8 | 52 | 65 | 41 | 26 | 9 | 68 | 61 | 55 | M10-1.5 | 16.5 |
| 1" | -16 | 61 | 25.4 | 26.2 | 13.1 | 52.4 | 26.2 | 59 | 70 | 48 | 29 | 9 | 72 | 67 | 61 | M10-1.5 | 14.5 |
| 1 1/4" | -20 | 61 | 31.8 | 30.2 | 15.1 | 58.7 | 29.35 | 73 | 79 | 54 | 37 | 10 | 82 | 78 | 75 | M10-1.5 | 16.5 |
| 1 1/2" | -24 | 61 | 38.1 | 35.7 | 17.85 | 69.9 | 34.95 | 83 | 94 | 64 | 41 | 12 | 96 | 90 | 85 | M12-1.75 | 19.5 |
| 2" | -32 | 61 | 50.8 | 42.9 | 21.45 | 77.8 | 38.9 | 97 | 102 | 76 | 49 | 12 | 104 | 102 | 99 | M12-1.75 | 19.5 |
| 2 1/2" | -40 | 61 | 63.5 | 50.8 | 25.4 | 88.9 | 44.45 | 109 | 114 | 89 | 54 | 13 | 117 | 114 | 111 | M12-1.75 | 21.5 |
| 3" | -48 | 61 | 76.2 | 61.9 | 30.95 | 106.4 | 53.2 | 131 | 135 | 106 | 66 | 14 | 137 | 136 | 133 | M16-2 | 28.5 |
| 3 1/2" | -56 | 61 | 88.9 | 69.9 | 34.95 | 120.7 | 60.35 | 140 | 152 | 119 | 70 | 16 | 155 | 148 | 142 | M16-2 | 28.5 |
| 4" | -64 | 61 | 101.6 | 77.8 | 38.9 | 130.2 | 65.1 | 152 | 162 | 132 | 76 | 16 | 164 | 160 | 155 | M16-2 | 25.5 |
| 3/4" | -12 | 62 | 19.1 | 23.8 | 11.9 | 50.8 | 25.4 | 60 | 71 | 48 | 30 | 10 | 75 | 70 | 66 | M10-1.5 | 16.5 |
| 1" | -16 | 62 | 25.4 | 27.8 | 13.9 | 57.2 | 28.6 | 70 | 81 | 54 | 35 | 12 | 84 | 80 | 75 | M12-1.75 | 21.5 |
| 1 1/4" | -20 | 62 | 31.8 | 31.8 | 15.9 | 66.6 | 33.3 | 78 | 95 | 60 | 39 | 14 | 99 | 90 | 83 | M12-1.75 | 18.5 |
| 1 1/2" | -24 | 62 | 38.1 | 36.5 | 18.25 | 79.3 | 39.65 | 95 | 113 | 70 | 48 | 17 | 116 | 108 | 101 | M16-2 | 25.5 |
| 2" | -32 | 62 | 50.8 | 44.5 | 22.25 | 96.8 | 48.4 | 114 | 133 | 86 | 57 | 18 | 137 | 128 | 120 | M20-2.5 | 33.5 |

All dimensions in millimeters unless otherwise specified

## 11) Inch Thread Installations

- General purpose. "Type 1" tapped holes (HS 260)
- ANSI B1.1 Unified Inch screw threads
- Tolerance class 2B

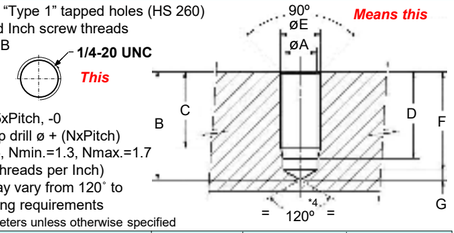


**Notes:**
*1 Tolerance ±0.2
*2 Tolerance +0.75xPitch, -0
*3 Chamfer ø = Tap drill ø + (NxPitch)
With Nnom.=1.5, Nmin.=1.3, Nmax.=1.7
Pitch = 25.4 / (Threads per Inch)
*4 Drill tip angle may vary from 120˚ to 180˚ due to tooling requirements

All dimensions in millimeters unless otherwise specified

| Thread Inch | Threads Per Inch Nom. | Tap Drill øA Nom. | Tap Drill øA Max. | Tap Drill øA Min. | Tapping B*1 Nom. | Tapping C*2 Nom. | Tapping D*2 Min. | Chamfer øE*3 Nom. | Chamfer øE*3 Tol. | For Ref. F Nom. | For Ref. G Nom. |
|---|---|---|---|---|---|---|---|---|---|---|---|
| #4 | 40 | 2.26 | 2.3851 | 2.1565 | 10.4 | 5.7 | 7.6 | 3.213 | ±0.127 | 9.747 | 0.653 |
| #8 | 32 | 3.45 | 3.5306 | 3.3020 | 13.5 | 8.3 | 10.68 | 4.641 | ±0.159 | 12.504 | 0.996 |
| #10 | 24 | 3.80 | 3.9624 | 3.6830 | 16.0 | 9.7 | 12.87 | 5.388 | ±0.212 | 14.903 | 1.097 |
| 1/4 | 20 | 5.11 | 5.2578 | 4.9784 | 20.3 | 12.7 | 16.51 | 7.015 | ±0.254 | 18.825 | 1.475 |
| 5/16 | 18 | 6.53 | 6.7310 | 6.4008 | 24.4 | 15.9 | 20.13 | 8.647 | ±0.282 | 22.515 | 1.885 |
| 3/8 | 16 | 7.94 | 8.1534 | 7.7978 | 28.7 | 19.1 | 23.86 | 10.321 | ±0.318 | 26.408 | 2.292 |
| 1/2 | 13 | 10.72 | 11.0236 | 10.5918 | 37.3 | 25.4 | 31.26 | 13.651 | ±0.391 | 34.205 | 3.095 |
| 5/8 | 11 | 13.49 | 13.8684 | 13.3858 | 46.0 | 31.8 | 38.73 | 16.954 | ±0.462 | 42.106 | 3.894 |
| 3/4 | 10 | 16.67 | 16.8402 | 16.3068 | 54.1 | 38.1 | 45.72 | 20.480 | ±0.508 | 49.288 | 4.812 |
| 1 | 8 | 22.23 | 22.6060 | 21.9710 | 70.9 | 50.8 | 60.32 | 26.993 | ±0.635 | 64.483 | 6.417 |
| 1 1/4 | 7 | 28.18 | 28.5242 | 27.8130 | 87.1 | 63.5 | 74.39 | 33.623 | ±0.726 | 78.965 | 8.135 |
| 1 1/2 | 6 | 34.00 | 34.2900 | 33.5280 | 103.9 | 76.2 | 88.9 | 40.350 | ±0.847 | 94.085 | 9.815 |
| 1 3/4 | 5 | 39.29 | 39.8272 | 38.9636 | 121.6 | 88.9 | 104.14 | 46.910 | ±1.016 | 110.258 | 11.342 |
| 2 | 4.5 | 45.25 | 45.5930 | 44.6786 | 138.9 | 101.6 | 118.53 | 53.717 | ±1.129 | 125.837 | 13.063 |

## 12) Inch Counterbore Holes

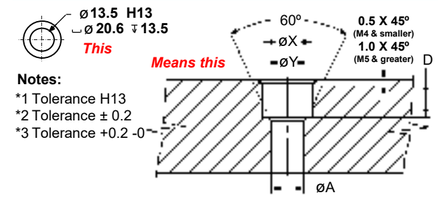


**Notes:**
*1 Tolerance H13
*2 Tolerance ± 0.2
*3 Tolerance +0.2 -0

| Screw Size | | Drill Size øA*1 | Counterbore Diameter øX*2 | Countersink Diameter øY*3 | Counterbore Depth D*2 |
|---|---|---|---|---|---|
| Inch | Inch | Nom. | Nom. | Min. | Nom. |
| #4 | 0.1120 | 3.5 | 5.5 | - | 3.0 |
| #8 | 0.1640 | 4.9 | 8.0 | - | 5.0 |
| #10 | 0.1900 | 5.6 | 9.5 | - | 6.5 |
| 1/4 | 0.2500 | 7.1 | 11.1 | - | 7.0 |
| 5/16 | 0.3125 | 8.7 | 13.5 | - | 9.0 |
| 3/8 | 0.0375 | 10.3 | 15.9 | 10.5 | 10.5 |
| 1/2 | 0.5000 | 13.5 | 20.6 | 14.0 | 13.5 |
| 5/8 | 0.6250 | 16.7 | 25.4 | 17.5 | 17.0 |
| 3/4 | 0.7500 | 19.8 | 30.2 | 21.0 | 20.0 |
| 1 | 1.0000 | 26.2 | 41.3 | 27.9 | 27.0 |
| 1-1/4 | 1.2500 | 33.3 | 50.8 | 34.8 | 33.0 |
| 1-1/2 | 1.5000 | 39.7 | 60.3 | 41.7 | 38.9 |
| 1-3/4 | 1.7500 | 46.0 | 69.9 | 48.5 | 45.2 |
| 2 | 2.0000 | 53.0 | 79.4 | 55.4 | 52.0 |

All dimensions in millimeters unless otherwise specified

Printed copies are uncontrolled

© 2025 Husky Technologies ™. NO INTELLECTUAL PROPERTY RIGHTS ARE GRANTED INCLUDING ANY LICENSE, IMPLIED OR OTHERWISE. ALL RIGHTS RESERVED. ALL INFORMATION IS MERELY FOR EDUCATIONAL AND/OR INFORMATIONAL PURPOSES AND IS NOT INTENDED TO BE RELIED UPON AS A SUBSTITUTE FOR PROFESSIONAL ADVICE.

HUSKY®
Keeping our customers in the lead

# Supplier Quick Reference

## Common Drawing Features and Manufacturing Practices

All dimensions in millimeters unless otherwise specified

## 13) ISO 7/1 - Rc, Rp or R Pipe Threads (BSPT)

ISO 7/1

**Internal Threads**
**(sealing on the thread)**
- ISO 7/1-Rc: taper pipe thread
- ISO 7/1-Rp: parallel pipe thread

**External Threads**
**(sealing on the thread)**
- ISO 7/1-R: taper (always) pipe thread

**H = .960491 P**
**h = .640327 P**
**r = .137329 P**

**Thread Inspection**
- ISO 7/2

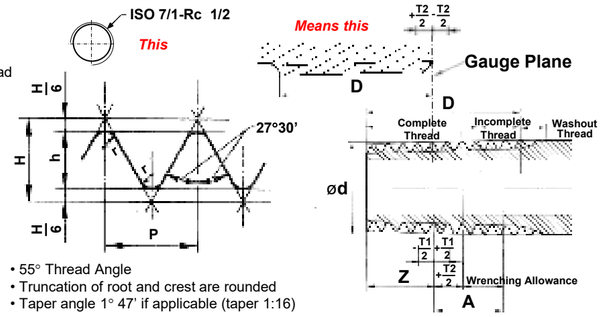


- 55° Thread Angle
- Truncation of root and crest are rounded
- Taper angle 1° 47' if applicable (taper 1:16)

| ISO 7/1 Thread | Thread Per Inch | Pitch of Thread | Depth of Thread | Basic Diameter at Gauge Plane | | | Gauge Length (distance to Pipe end) | | | | Gauge Plane Position | Length of Useful Thread (Pipe) | | | Fitting Allowance |
|---|---|---|---|---|---|---|---|---|---|---|---|---|---|---|---|
| | | P | h | ød | ød2 | ød1 | Z | T1/2 | Z | | T2/2 | D | | | A |
| | | Nom. | Nom. | Major | Pitch | Minor | Basic | (+/-) | Max. | Min. | (+/-) | Basic | Max. | Min. | mm |
| 1/16" | 28 | 0.907 | 0.581 | 7.723 | 7.142 | 6.561 | 4 | 0.9 | 4.9 | 3.1 | 1.1 | 6.5 | 7.4 | 5.6 | 2.5 |
| 1/8" | 28 | 0.907 | 0.581 | 9.728 | 9.147 | 8.566 | 4 | 0.9 | 4.9 | 3.1 | 1.1 | 6.5 | 7.4 | 5.6 | 2.5 |
| 1/4" | 19 | 1.337 | 0.856 | 13.157 | 12.301 | 11.445 | 6 | 1.3 | 7.3 | 4.7 | 1.7 | 9.7 | 11 | 8.4 | 3.7 |
| 3/8" | 19 | 1.337 | 0.856 | 16.662 | 15.806 | 14.95 | 6.4 | 1.3 | 7.7 | 5.1 | 1.7 | 10.1 | 11.4 | 8.8 | 3.7 |
| 1/2" | 14 | 1.814 | 1.162 | 20.955 | 19.793 | 18.631 | 8.2 | 1.8 | 10 | 6.4 | 2.3 | 13.2 | 15 | 11.4 | 5 |
| 3/4" | 14 | 1.814 | 1.162 | 26.441 | 25.279 | 24.117 | 9.5 | 1.8 | 11.3 | 7.7 | 2.3 | 14.5 | 16.3 | 12.7 | 5 |
| 1" | 11 | 2.309 | 1.479 | 33.249 | 31.77 | 30.291 | 10.4 | 2.3 | 12.7 | 8.1 | 2.9 | 16.8 | 19.1 | 14.5 | 6.4 |
| 1-1/4" | 11 | 2.309 | 1.479 | 41.91 | 40.431 | 38.952 | 12.7 | 2.3 | 15 | 10.4 | 2.9 | 19.1 | 21.4 | 16.8 | 6.4 |
| 1-1/2" | 11 | 2.309 | 1.479 | 47.803 | 46.324 | 44.845 | 12.7 | 2.3 | 15 | 10.4 | 2.9 | 19.1 | 21.4 | 16.8 | 6.4 |
| 2" | 11 | 2.309 | 1.479 | 59.614 | 58.135 | 56.656 | 15.9 | 2.3 | 18.2 | 13.6 | 2.9 | 23.4 | 25.7 | 21.1 | 7.5 |
| 2-1/2" | 11 | 2.309 | 1.479 | 75.184 | 73.705 | 72.226 | 17.5 | 3.5 | 21 | 14 | 3.5 | 26.7 | 30.2 | 23.2 | 9.2 |
| 3" | 11 | 2.309 | 1.479 | 87.884 | 86.405 | 84.926 | 20.6 | 3.5 | 24.1 | 17.1 | 3.5 | 29.8 | 33.3 | 26.3 | 9.2 |
| 4" | 11 | 2.309 | 1.479 | 113.03 | 111.551 | 110.072 | 25.4 | 3.5 | 28.9 | 21.9 | 3.5 | 35.8 | 39.3 | 32.3 | 10.4 |
| 5" | 11 | 2.309 | 1.479 | 138.43 | 136.951 | 135.472 | 28.6 | 3.5 | 32.1 | 25.1 | 3.5 | 40.1 | 43.6 | 36.6 | 11.5 |
| 6" | 11 | 2.309 | 1.479 | 163.83 | 162.351 | 160.872 | 28.6 | 3.5 | 32.1 | 25.1 | 3.5 | 40.1 | 43.6 | 36.6 | 11.5 |

All dimensions in millimeters unless otherwise specified

## 14) ISO 228 - G Pipe Threads (BSPP)

ISO 228-1

**Internal Threads**
**(sealing not made on the thread)**
- ISO 228-1- G: parallel pipe thread

**External Threads**
**(sealing not made on the thread)**
- ISO 228-1- G: parallel pipe thread, Tolerance class A

**H = .960491 P**
**h = .640327 P**
**r = .137329 P**

**For Port Applications**
An o-ring and washer or a bonded washer is needed to achieve a proper seal

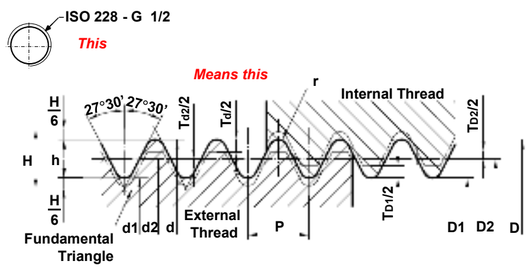


**Thread Inspection**
- ISO 228-2

- Profile of threads identical to parallel thread specified in ISO 7-1
- Truncation of crest as per $T_{D1}$ and $T_d$ (see table below)
- 55° Thread Angle

| ISO 228-1 Thread | Thread Per Inch | Pitch of Thread | Depth of Thread | Basic Diameters at Gauge Plane | | | Tolerances on Pitch Diameter | | | | Tolerances on Minor Diameter | | Tolerances on Major Diameter | |
|---|---|---|---|---|---|---|---|---|---|---|---|---|---|---|
| | | P | h | d=D | d2=D2 | d1=D1 | $T_{D2}$ | | $T_{d2}$ | | $T_{D1}$ | | $T_d$ | |
| | | Nom. | Nom. | Major | Pitch | Minor | Lower | Upper | Lower | Upper | Lower | Upper | Lower | Upper |
| 1/16" | 28 | 0.907 | 0.581 | 7.723 | 7.142 | 6.561 | 0 | 0.107 | -0.107 | 0 | 0 | 0.282 | -0.214 | 0 |
| 1/8" | 28 | 0.907 | 0.581 | 9.728 | 9.147 | 8.566 | 0 | 0.107 | -0.107 | 0 | 0 | 0.282 | -0.214 | 0 |
| 1/4" | 19 | 1.337 | 0.856 | 13.157 | 12.301 | 11.445 | 0 | 0.125 | -0.125 | 0 | 0 | 0.445 | -0.25 | 0 |
| 3/8" | 19 | 1.337 | 0.856 | 16.662 | 15.806 | 14.95 | 0 | 0.125 | -0.125 | 0 | 0 | 0.445 | -0.25 | 0 |
| 1/2" | 14 | 1.814 | 1.162 | 20.955 | 19.793 | 18.631 | 0 | 0.142 | -0.142 | 0 | 0 | 0.541 | -0.284 | 0 |
| 5/8" | 14 | 1.874 | 1.162 | 22.911 | 21.749 | 20.587 | 0 | 0.142 | -0.142 | 0 | 0 | 0.541 | -0.284 | 0 |
| 3/4" | 14 | 1.814 | 1.162 | 26.441 | 25.279 | 24.117 | 0 | 0.142 | -0.142 | 0 | 0 | 0.541 | -0.284 | 0 |
| 7/8" | 14 | 1.814 | 1.162 | 30.201 | 29.039 | 27.877 | 0 | 0.142 | -0.142 | 0 | 0 | 0.541 | -0.284 | 0 |
| 1" | 11 | 2.309 | 1.479 | 33.249 | 31.77 | 30.291 | 0 | 0.18 | -0.18 | 0 | 0 | 0.64 | -0.36 | 0 |
| 1-1/8" | 11 | 2.309 | 1.479 | 37.897 | 36.418 | 34.939 | 0 | 0.18 | -0.18 | 0 | 0 | 0.64 | -0.36 | 0 |
| 1-1/4" | 11 | 2.309 | 1.479 | 41.91 | 40.431 | 38.952 | 0 | 0.18 | -0.18 | 0 | 0 | 0.64 | -0.36 | 0 |
| 1-1/2" | 11 | 2.309 | 1.479 | 47.803 | 46.324 | 44.845 | 0 | 0.18 | -0.18 | 0 | 0 | 0.64 | -0.36 | 0 |
| 1-3/4" | 11 | 2.309 | 1.479 | 53.746 | 52.267 | 50.788 | 0 | 0.18 | -0.18 | 0 | 0 | 0.64 | -0.36 | 0 |
| 2" | 11 | 2.309 | 1.479 | 59.614 | 58.135 | 56.656 | 0 | 0.18 | -0.18 | 0 | 0 | 0.64 | -0.36 | 0 |
| 2-1/4" | 11 | 2.309 | 1.479 | 65.71 | 64.231 | 62.752 | 0 | 0.217 | -0.217 | 0 | 0 | 0.64 | -0.434 | 0 |
| 2-1/2" | 11 | 2.309 | 1.479 | 75.184 | 73.705 | 72.226 | 0 | 0.217 | -0.217 | 0 | 0 | 0.64 | -0.434 | 0 |
| 2-3/4" | 11 | 2.309 | 1.479 | 81.534 | 80.055 | 78.576 | 0 | 0.217 | -0.217 | 0 | 0 | 0.64 | -0.434 | 0 |
| 3" | 11 | 2.309 | 1.479 | 87.884 | 86.405 | 84.926 | 0 | 0.217 | -0.217 | 0 | 0 | 0.64 | -0.434 | 0 |
| 3-1/2" | 11 | 2.309 | 1.479 | 100.33 | 98.851 | 97.372 | 0 | 0.217 | -0.217 | 0 | 0 | 0.64 | -0.434 | 0 |
| 4" | 11 | 2.309 | 1.479 | 113.03 | 111.551 | 110.072 | 0 | 0.217 | -0.217 | 0 | 0 | 0.64 | -0.434 | 0 |
| 4-1/2" | 11 | 2.309 | 1.479 | 125.73 | 124.251 | 122.772 | 0 | 0.217 | -0.217 | 0 | 0 | 0.64 | -0.434 | 0 |
| 5" | 11 | 2.309 | 1.479 | 138.43 | 136.951 | 135.472 | 0 | 0.217 | -0.217 | 0 | 0 | 0.64 | -0.434 | 0 |
| 5-1/2" | 11 | 2.309 | 1.479 | 151.13 | 149.651 | 148.172 | 0 | 0.217 | -0.217 | 0 | 0 | 0.64 | -0.434 | 0 |
| 6" | 11 | 2.309 | 1.479 | 163.83 | 162.351 | 160.872 | 0 | 0.217 | -0.217 | 0 | 0 | 0.64 | -0.434 | 0 |

All dimensions in millimeters unless otherwise specified

## 15) Centre Holes (for Manufacturing)

- ISO 6411 - Simplified representation of centre holes
- Type A centre holes (as per ISO 866)
- No protecting chamfers
- Center holes required on finished part
- Dimension L depends on length of centre drill
- L should not be less than t

| Pilot Diameter | Countersink Diameter | Length |
|---|---|---|
| ød | øD2 | t |
| Nom. | Nom. | For Ref. |
| 1 | 2.12 | 0.9 |
| 2 | 4.25 | 1.8 |
| 4 | 8.5 | 3.5 |
| 6.3 | 13.2 | 5.5 |
| 10 | 21.2 | 8.7 |

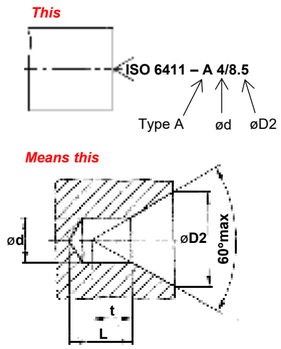


## 18) Surface Roughness

Surface Roughness Selection (ANSI Y14.36M, HS 514)

| Ra (µm) | Recommended Applications |
|---|---|
| ≥ 12.5 | Not machined sand mold casting, flame cut or hot rolled parts surfaces |
| 12.5 | Machined and then painted clearance surfaces or clearance surfaces not visible in parts assembly |
| 6.3 | Large clearance outside diameters or drilled clearance holes (vibrations) |
| 3.2 | Turned and milled datum surfaces (tol. ≥ 0.025mm), housing fits (no gasket or seal), mating surfaces (e.g. pad, face) |
| 1.6 | Turned and milled datum surfaces (tol. < 0.025mm), pressed fits, keyways, etc. |
| 0.8 | Apply only where required for the functionality or assembly of the parts. Limit to areas where absolutely needed |
| ≤ 0.4 | Precision sliding or rotating surfaces, friction surfaces, precision bearings, etc. |

Standard Roughness Cutoff *

| X < Ra ≤ Y (unit: µm) | | Roughness Cutoff (unit: mm) |
|---|---|---|
| - | 0.02 | 0.08 |
| 0.02 | 0.1 | 0.25 |
| 0.1 | 2 | 0.8 |
| 2 | 10 | 2.5 |
| 10 | - | 8 |

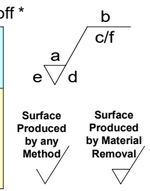


* If no roughness cutoff value is indicated

Symbol Value Application

a = roughness value Ra in micrometers
b = production method. treatment. coating. other text. or note callout
c = roughness cutoff or sampling length in millimeters
d = direction of lay
e = minimum material removal requirement in millimeters
f = roughness value other than Ra in micrometers preceded by its parameter symbol. Note: Rz shall not be used.

**Note:** b, c, d, e and f are optional

## 16) Inch Countersink Holes

| Screw Size | | Drill Size | Countersink Diameter | Countersink Depth |
|---|---|---|---|---|
| | | øA*1 | øB*2 | C |
| Inch | Inch | Nom. | Nom. | For Ref. |
| #4 | 0.1120 | 3.5 | 6.7 | 1.6 |
| #8 | 0.1640 | 4.9 | 9.3 | 2.2 |
| #10 | 0.1900 | 5.6 | 10.6 | 2.5 |
| 1/4 | 0.2500 | 7.1 | 13.7 | 3.3 |
| 5/16 | 0.3125 | 8.7 | 16.9 | 4.1 |
| 3/8 | 0.0375 | 10.3 | 20.1 | 4.9 |
| 1/2 | 0.5000 | 13.5 | 24.1 | 5.3 |
| 5/8 | 0.6250 | 16.7 | 30.5 | 6.9 |
| 3/4 | 0.7500 | 19.8 | 36.8 | 8.5 |

All dimensions in millimeters unless otherwise specified

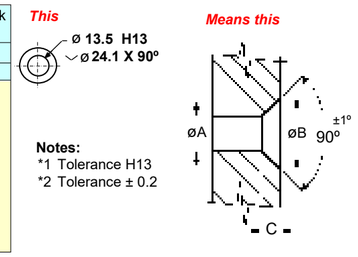


**Notes:**
*1 Tolerance H13
*2 Tolerance ± 0.2

## 17) Inch Clearance Holes

| Screw Size | | Drill Size | Countersink Diameter |
|---|---|---|---|
| | | øA*1 | øY*2 |
| Inch | Inch | Nom. | Nom. |
| #4 | 0.1120 | 3.5 | - |
| #8 | 0.1640 | 4.9 | - |
| #10 | 0.1900 | 5.6 | - |
| 1/4 | 0.2500 | 7.1 | - |
| 5/16 | 0.3125 | 8.7 | - |
| 3/8 | 0.0375 | 10.3 | 10.5 |
| 1/2 | 0.5000 | 13.5 | 14.0 |
| 5/8 | 0.6250 | 16.7 | 17.5 |
| 3/4 | 0.7500 | 19.8 | 21.0 |
| 1 | 1.0000 | 26.2 | 27.9 |
| 1-1/4 | 1.2500 | 33.3 | 34.8 |
| 1-1/2 | 1.5000 | 39.7 | 41.7 |
| 1-3/4 | 1.7500 | 46 | 48.5 |
| 2 | 2.0000 | 52.4 | 55.4 |

All dimensions in millimeters unless otherwise specified

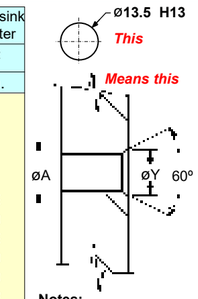


**Notes:**
*1 Tolerance H13
*2 Tolerance +0.2 -0

## 19) ISO Limits and Fits

ISO 286, Parts 1 & 2

This: 50 P7 — Means this: 50 - .017 / - .042

This: 50 u6 — Means this: 50 + .086 / + .070

**All values in micrometers unless otherwise specified (1 µm = 0.001mm)**

| Basic Size (mm) | | Holes (Internal Features) | | | | | | | | | | | | | | | | | | Shafts (External Features) | | | | | | | | | | | | | | | | | |
|---|---|---|---|---|---|---|---|---|---|---|---|---|---|---|---|---|---|---|---|---|---|---|---|---|---|---|---|---|---|---|---|---|---|---|---|---|---|
| Over | To | C11 | D9 | F8 | E8 | G7 | H6 | H7 | H8 | H9 | H10 | H11 | H12 | H13 | K7 | N7 | P7 | S7 | U7 | c11 | d9 | e9 | f7 | f8 | g6 | h6 | h7 | h8 | h9 | h11 | j6 | k6 | m6 | n6 | p6 | s6 | u6 |
| 0 | 3 | +120<br>+60 | +45<br>+20 | +20<br>+6 | +28<br>+14 | +12<br>+2 | +6<br>0 | +10<br>0 | +14<br>0 | +25<br>0 | +40<br>0 | +60<br>0 | +100<br>0 | +140<br>0 | 0<br>-10 | -4<br>-14 | -6<br>-16 | -14<br>-24 | -18<br>-28 | -60<br>-120 | -20<br>-45 | -14<br>-39 | -6<br>-16 | -6<br>-20 | -2<br>-8 | 0<br>-6 | 0<br>-10 | 0<br>-14 | 0<br>-25 | 0<br>-60 | +4<br>-2 | +6<br>0 | +8<br>+2 | +10<br>+4 | +12<br>+6 | +20<br>+14 | +24<br>+18 |
| 3 | 6 | +145<br>+70 | +60<br>+30 | +28<br>+10 | +38<br>+20 | +16<br>+4 | +8<br>0 | +12<br>0 | +18<br>0 | +30<br>0 | +48<br>0 | +75<br>0 | +120<br>0 | +180<br>0 | +3<br>-9 | -4<br>-16 | -8<br>-20 | -15<br>-27 | -19<br>-31 | -70<br>-145 | -30<br>-60 | -20<br>-50 | -10<br>-22 | -10<br>-28 | -4<br>-12 | 0<br>-8 | 0<br>-12 | 0<br>-18 | 0<br>-30 | 0<br>-75 | +6<br>-2 | +9<br>+1 | +12<br>+4 | +16<br>+8 | +20<br>+12 | +27<br>+19 | +31<br>+23 |
| 6 | 10 | +170<br>+80 | +76<br>+40 | +35<br>+13 | +47<br>+25 | +20<br>+5 | +9<br>0 | +15<br>0 | +22<br>0 | +36<br>0 | +58<br>0 | +90<br>0 | +150<br>0 | +220<br>0 | +5<br>-10 | -4<br>-19 | -9<br>-24 | -17<br>-32 | -22<br>-37 | -80<br>-170 | -40<br>-76 | -25<br>-61 | -13<br>-28 | -13<br>-35 | -5<br>-14 | 0<br>-9 | 0<br>-15 | 0<br>-22 | 0<br>-36 | 0<br>-90 | +7<br>-2 | +10<br>+1 | +15<br>+6 | +19<br>+10 | +24<br>+15 | +32<br>+23 | +37<br>+28 |
| 10 | 18 | +205<br>+95 | +93<br>+50 | +43<br>+16 | +59<br>+32 | +24<br>+6 | +11<br>0 | +18<br>0 | +27<br>0 | +43<br>0 | +70<br>0 | +110<br>0 | +180<br>0 | +270<br>0 | +6<br>-12 | -5<br>-23 | -11<br>-29 | -21<br>-39 | -26<br>-44 | -95<br>-205 | -50<br>-93 | -32<br>-75 | -16<br>-34 | -16<br>-43 | -6<br>-17 | 0<br>-11 | 0<br>-18 | 0<br>-27 | 0<br>-43 | 0<br>-110 | +8<br>-3 | +12<br>+1 | +18<br>+7 | +23<br>+12 | +29<br>+18 | +39<br>+28 | +44<br>+33 |
| 18 | 24 | +240<br>+110 | +117<br>+65 | +53<br>+20 | +73<br>+40 | +28<br>+7 | +13<br>0 | +21<br>0 | +33<br>0 | +52<br>0 | +84<br>0 | +130<br>0 | +210<br>0 | +330<br>0 | +6<br>-15 | -7<br>-28 | -14<br>-35 | -27<br>-48 | -33<br>-54<br>-40<br>-61 | -110<br>-240 | -65<br>-117 | -40<br>-92 | -20<br>-41 | -20<br>-53 | -7<br>-20 | 0<br>-13 | 0<br>-21 | 0<br>-33 | 0<br>-52 | 0<br>-130 | +9<br>-4 | +15<br>+2 | +21<br>+8 | +28<br>+15 | +35<br>+22 | +48<br>+35 | +54<br>+41<br>+61<br>+48 |
| 30 | 40 | +280<br>+120 | +142<br>+80 | +64<br>+25 | +89<br>+50 | +34<br>+9 | +16<br>0 | +25<br>0 | +39<br>0 | +62<br>0 | +100<br>0 | +160<br>0 | +250<br>0 | +390<br>0 | +7<br>-18 | -8<br>-33 | -17<br>-42 | -34<br>-59 | -51<br>-76<br>-61<br>-86 | -120<br>-280<br>-130<br>-290 | -80<br>-142 | -50<br>-112 | -25<br>-50 | -25<br>-64 | -9<br>-25 | 0<br>-16 | 0<br>-25 | 0<br>-39 | 0<br>-62 | 0<br>-160 | +11<br>-5 | +18<br>+2 | +25<br>+9 | +33<br>+17 | +42<br>+26 | +59<br>+43 | +76<br>+60<br>+86<br>+70 |
| 40 | 50 | +290<br>+130 | | | | | | | | | | | | | | | | | | | | | | | | | | | | | | | | | | | |
| 50 | 65 | +330<br>+140 | +174<br>+100 | +76<br>+30 | +106<br>+60 | +40<br>+10 | +19<br>0 | +30<br>0 | +46<br>0 | +74<br>0 | +120<br>0 | +190<br>0 | +300<br>0 | +460<br>0 | +9<br>-21 | -9<br>-39 | -21<br>-51 | -42<br>-72<br>-48<br>-78 | -76<br>-106<br>-91<br>-121 | -140<br>-330<br>-150<br>-340 | -100<br>-174 | -60<br>-134 | -30<br>-60 | -30<br>-76 | -10<br>-29 | 0<br>-19 | 0<br>-30 | 0<br>-46 | 0<br>-74 | 0<br>-190 | +12<br>-7 | +21<br>+2 | +30<br>+11 | +39<br>+20 | +51<br>+32 | +72<br>+53<br>+78<br>+59 | +106<br>+87<br>+121<br>+102 |
| 65 | 80 | +340<br>+150 | | | | | | | | | | | | | | | | | | | | | | | | | | | | | | | | | | | |
| 80 | 100 | +390<br>+170 | +207<br>+120 | +90<br>+36 | +125<br>+72 | +47<br>+12 | +22<br>0 | +35<br>0 | +54<br>0 | +87<br>0 | +140<br>0 | +220<br>0 | +350<br>0 | +540<br>0 | +10<br>-25 | -10<br>-45 | -24<br>-59 | -58<br>-93<br>-66<br>-101 | -111<br>-146<br>-131<br>-166 | -170<br>-390<br>-180<br>-400 | -120<br>-207 | -72<br>-159 | -36<br>-71 | -36<br>-90 | -12<br>-34 | 0<br>-22 | 0<br>-35 | 0<br>-54 | 0<br>-87 | 0<br>-220 | +13<br>-9 | +25<br>+3 | +35<br>+13 | +45<br>+23 | +59<br>+37 | +93<br>+71<br>+101<br>+79 | +146<br>+124<br>+166<br>+144 |
| 100 | 120 | +400<br>+180 | | | | | | | | | | | | | | | | | | | | | | | | | | | | | | | | | | | |
| 120 | 140 | +450<br>+200 | +245<br>+145 | +106<br>+43 | +148<br>+85 | +54<br>+14 | +25<br>0 | +40<br>0 | +63<br>0 | +100<br>0 | +160<br>0 | +250<br>0 | +400<br>0 | +630<br>0 | +12<br>-28 | -12<br>-52 | -28<br>-68 | -77<br>-117<br>-85<br>-125 | -155<br>-195<br>-175<br>-215 | -200<br>-450<br>-210<br>-460 | -145<br>-245 | -85<br>-185 | -43<br>-83 | -43<br>-106 | -14<br>-39 | 0<br>-25 | 0<br>-40 | 0<br>-63 | 0<br>-100 | 0<br>-250 | +14<br>-11 | +28<br>+3 | +40<br>+15 | +52<br>+27 | +68<br>+43 | +117<br>+92<br>+125<br>+100 | +195<br>+170<br>+215<br>+190 |
| 140 | 160 | +460<br>+210 | | | | | | | | | | | | | | | | | | | | | | | | | | | | | | | | | | | |
| 160 | 180 | +480<br>+230 | | | | | | | | | | | | | | | | -93<br>-133 | -195<br>-235 | -230<br>-480 | | | | | | | | | | | | | | | | | +133<br>+108 | +235<br>+210 |
| 180 | 200 | +530<br>+240 | +285<br>+170 | +122<br>+50 | +172<br>+100 | +61<br>+15 | +29<br>0 | +46<br>0 | +72<br>0 | +115<br>0 | +185<br>0 | +290<br>0 | +460<br>0 | +720<br>0 | +13<br>-33 | -14<br>-60 | -33<br>-79 | -105<br>-151<br>-113<br>-159 | -219<br>-265<br>-241<br>-287 | -240<br>-530<br>-260<br>-550 | -170<br>-285 | -100<br>-215 | -50<br>-96 | -50<br>-122 | -15<br>-44 | 0<br>-29 | 0<br>-46 | 0<br>-72 | 0<br>-115 | 0<br>-290 | +16<br>-13 | +33<br>+4 | +46<br>+17 | +60<br>+31 | +79<br>+50 | +151<br>+122<br>+159<br>+130 | +265<br>+236<br>+287<br>+258 |
| 200 | 225 | +550<br>+260 | | | | | | | | | | | | | | | | | | | | | | | | | | | | | | | | | | | |
| 225 | 250 | +570<br>+280 | | | | | | | | | | | | | | | | -123<br>-169 | -267<br>-313 | -280<br>-570 | | | | | | | | | | | | | | | | | +169<br>+140 | +313<br>+284 |
| 250 | 280 | +620<br>+300 | +320<br>+190 | +137<br>+56 | +191<br>+110 | +69<br>+17 | +32<br>0 | +52<br>0 | +81<br>0 | +130<br>0 | +210<br>0 | +320<br>0 | +520<br>0 | +810<br>0 | +16<br>-36 | -14<br>-66 | -36<br>-88 | -138<br>-190<br>-150<br>-202 | -295<br>-347<br>-330<br>-382 | -300<br>-620<br>-330<br>-650 | -190<br>-320 | -110<br>-240 | -56<br>-108 | -56<br>-137 | -17<br>-49 | 0<br>-32 | 0<br>-52 | 0<br>-81 | 0<br>-130 | 0<br>-320 | +16<br>-16 | +36<br>+4 | +52<br>+20 | +66<br>+34 | +88<br>+56 | +190<br>+158<br>+202<br>+170 | +347<br>+315<br>+382<br>+350 |
| 280 | 315 | +650<br>+330 | | | | | | | | | | | | | | | | | | | | | | | | | | | | | | | | | | | |
| 315 | 355 | +720<br>+360 | +350<br>+210 | +151<br>+62 | +214<br>+125 | +75<br>+18 | +36<br>0 | +57<br>0 | +89<br>0 | +140<br>0 | +230<br>0 | +360<br>0 | +570<br>0 | +890<br>0 | +17<br>-40 | -16<br>-73 | -41<br>-98 | -169<br>-226<br>-187<br>-244 | -369<br>-426<br>-414<br>-471 | -360<br>-720<br>-400<br>-760 | -210<br>-350 | -125<br>-265 | -62<br>-119 | -62<br>-151 | -18<br>-54 | 0<br>-36 | 0<br>-57 | 0<br>-89 | 0<br>-140 | 0<br>-360 | +18<br>-18 | +40<br>+4 | +57<br>+21 | +73<br>+37 | +98<br>+62 | +226<br>+190<br>+244<br>+208 | +426<br>+390<br>+471<br>+435 |
| 355 | 400 | +760<br>+400 | | | | | | | | | | | | | | | | | | | | | | | | | | | | | | | | | | | |
| 400 | 450 | +840<br>+440 | +385<br>+230 | +165<br>+68 | +232<br>+135 | +83<br>+20 | +40<br>0 | +63<br>0 | +97<br>0 | +155<br>0 | +250<br>0 | +400<br>0 | +630<br>0 | +970<br>0 | +18<br>-45 | -17<br>-80 | -45<br>-108 | -209<br>-272<br>-229<br>-292 | -467<br>-530<br>-517<br>-580 | -440<br>-840<br>-480<br>-880 | -230<br>-385 | -135<br>-290 | -68<br>-131 | -68<br>-165 | -20<br>-60 | 0<br>-40 | 0<br>-63 | 0<br>-97 | 0<br>-155 | 0<br>-400 | +20<br>-20 | +45<br>+5 | +63<br>+23 | +80<br>+40 | +108<br>+68 | +272<br>+232<br>+292<br>+252 | +530<br>+490<br>+580<br>+540 |
| 450 | 500 | +880<br>+480 | | | | | | | | | | | | | | | | | | | | | | | | | | | | | | | | | | | |
| 500 | 560 | | +435<br>+260 | +186<br>+76 | +255<br>+145 | +92<br>+22 | +44<br>0 | +70<br>0 | +110<br>0 | +175<br>0 | +280<br>0 | +440<br>0 | +700<br>0 | +1100<br>0 | 0<br>-70 | -44<br>-114 | -78<br>-148 | -280<br>-350<br>-310<br>-380 | -600<br>-670<br>-660<br>-730 | | -260<br>-435 | -145<br>-320 | -76<br>-146 | -76<br>-186 | -22<br>-66 | 0<br>-44 | 0<br>-70 | 0<br>-110 | 0<br>-175 | 0<br>-440 | | +44<br>0 | +70<br>+26 | +88<br>+44 | +122<br>+78 | +324<br>+280<br>+354<br>+310 | +644<br>+600<br>+704<br>+660 |
| 560 | 630 | | | | | | | | | | | | | | | | | | | | | | | | | | | | | | | | | | | | |
| 630 | 710 | | +490<br>+290 | +205<br>+80 | +285<br>+160 | +104<br>+24 | +50<br>0 | +80<br>0 | +125<br>0 | +200<br>0 | +320<br>0 | +500<br>0 | +800<br>0 | +1250<br>0 | 0<br>-80 | -50<br>-130 | -88<br>-168 | -340<br>-420<br>-380<br>-460 | -740<br>-820<br>-840<br>-920 | | -290<br>-490 | -160<br>-360 | -80<br>-160 | -80<br>-205 | -24<br>-74 | 0<br>-50 | 0<br>-80 | 0<br>-125 | 0<br>-200 | 0<br>-500 | | +50<br>0 | +80<br>+30 | +100<br>+50 | +138<br>+88 | +390<br>+340<br>+430<br>+380 | +790<br>+740<br>+890<br>+840 |
| 710 | 800 | | | | | | | | | | | | | | | | | | | | | | | | | | | | | | | | | | | | |
| 800 | 900 | | +550<br>+320 | +226<br>+86 | +310<br>+170 | +116<br>+26 | +56<br>0 | +90<br>0 | +140<br>0 | +230<br>0 | +360<br>0 | +560<br>0 | +900<br>0 | +1400<br>0 | 0<br>-90 | -56<br>-146 | -100<br>-190 | -430<br>-520<br>-470<br>-560 | -940<br>-1030<br>-1050<br>-1140 | | -320<br>-550 | -170<br>-400 | -86<br>-176 | -86<br>-226 | -26<br>-82 | 0<br>-56 | 0<br>-90 | 0<br>-140 | 0<br>-230 | 0<br>-560 | | +56<br>0 | +90<br>+34 | +112<br>+56 | +156<br>+100 | +486<br>+430<br>+526<br>+470 | +996<br>+940<br>+1106<br>+1050 |
| 900 | 1000 | | | | | | | | | | | | | | | | | | | | | | | | | | | | | | | | | | | | |
| 1000 | 1120 | | +610<br>+350 | +263<br>+98 | +360<br>+195 | +133<br>+28 | +66<br>0 | +105<br>0 | +165<br>0 | +260<br>0 | +420<br>0 | +660<br>0 | +1050<br>0 | +1650<br>0 | 0<br>-105 | -66<br>-171 | -120<br>-225 | -520<br>-625<br>-580<br>-685 | -1150<br>-1255<br>-1300<br>-1405 | | -350<br>-610 | -195<br>-455 | -98<br>-203 | -98<br>-263 | -28<br>-94 | 0<br>-66 | 0<br>-105 | 0<br>-165 | 0<br>-260 | 0<br>-660 | | +66<br>0 | +106<br>+40 | +132<br>+66 | +186<br>+120 | +586<br>+520<br>+646<br>+580 | +1216<br>+1150<br>+1366<br>+1300 |
| 1120 | 1250 | | | | | | | | | | | | | | | | | | | | | | | | | | | | | | | | | | | | |
| 1250 | 1400 | | +700<br>+390 | +305<br>+110 | +415<br>+220 | +155<br>+30 | +78<br>0 | +125<br>0 | +195<br>0 | +310<br>0 | +500<br>0 | +780<br>0 | +1250<br>0 | +1950<br>0 | 0<br>-125 | -78<br>-203 | -140<br>-265 | -640<br>-765<br>-720<br>-845 | -1450<br>-1575<br>-1600<br>-1725 | | -390<br>-700 | -220<br>-530 | -110<br>-235 | -110<br>-305 | -30<br>-108 | 0<br>-78 | 0<br>-125 | 0<br>-195 | 0<br>-310 | 0<br>-780 | | +78<br>0 | +126<br>+48 | +156<br>+78 | +218<br>+140 | +718<br>+640<br>+798<br>+720 | +1528<br>+1450<br>+1678<br>+1600 |
| 1400 | 1600 | | | | | | | | | | | | | | | | | | | | | | | | | | | | | | | | | | | | |
| 1600 | 1800 | | +800<br>+430 | +350<br>+120 | +470<br>+240 | +182<br>+32 | +92<br>0 | +150<br>0 | +230<br>0 | +370<br>0 | +600<br>0 | +920<br>0 | +1500<br>0 | +2300<br>0 | 0<br>-150 | -92<br>-242 | -170<br>-320 | -820<br>-970<br>-920<br>-1070 | -1850<br>-2000<br>-2000<br>-2150 | | -430<br>-800 | -240<br>-610 | -120<br>-270 | -120<br>-350 | -32<br>-124 | 0<br>-92 | 0<br>-150 | 0<br>-230 | 0<br>-370 | 0<br>-920 | | +92<br>0 | +150<br>+58 | +184<br>+92 | +262<br>+170 | +912<br>+820<br>+1012<br>+920 | +1942<br>+1850<br>+2092<br>+2000 |
| 1800 | 2000 | | | | | | | | | | | | | | | | | | | | | | | | | | | | | | | | | | | | |
| 2000 | 2240 | | +920<br>+480 | +410<br>+130 | +540<br>+260 | +209<br>+34 | +110<br>0 | +175<br>0 | +280<br>0 | +440<br>0 | +700<br>0 | +1100<br>0 | +1750<br>0 | +2800<br>0 | 0<br>-175 | -110<br>-285 | -195<br>-370 | -1000<br>-1175<br>-1100<br>-1275 | -2300<br>-2475<br>-2500<br>-2675 | | -480<br>-920 | -260<br>-700 | -130<br>-305 | -130<br>-410 | -34<br>-144 | 0<br>-110 | 0<br>-175 | 0<br>-280 | 0<br>-440 | 0<br>-1100 | | +110<br>0 | +178<br>+68 | +220<br>+110 | +305<br>+195 | +1110<br>+1000<br>+1210<br>+1100 | +2410<br>+2300<br>+2610<br>+2500 |
| 2240 | 2500 | | | | | | | | | | | | | | | | | | | | | | | | | | | | | | | | | | | | |
| 2500 | 2800 | | +1060<br>+520 | +475<br>+145 | +620<br>+290 | +248<br>+38 | +135<br>0 | +210<br>0 | +330<br>0 | +540<br>0 | +860<br>0 | +1350<br>0 | +2100<br>0 | +3300<br>0 | 0<br>-210 | -135<br>-345 | -240<br>-450 | -1250<br>-1460<br>-1400<br>-1610 | -2900<br>-3110<br>-3200<br>-3410 | | -520<br>-1060 | -290<br>-830 | -145<br>-355 | -145<br>-475 | -38<br>-173 | 0<br>-135 | 0<br>-210 | 0<br>-330 | 0<br>-540 | 0<br>-1350 | | +135<br>0 | +211<br>+76 | +270<br>+135 | +375<br>+240 | +1385<br>+1250<br>+1535<br>+1400 | +3035<br>+2900<br>+3335<br>+3200 |
| 2800 | 3150 | | |