CH40

Wireless Earbuds

Introduction

Thank you for choosing MSI CH40 wireless earbuds to be your companion. This exquisite wireless earbuds will surely give you a delightful and professional multimedia experience. This guide provides instructions and illustrations to help you get the most from the product, and it is recommended to read this guide before using it.

Overview

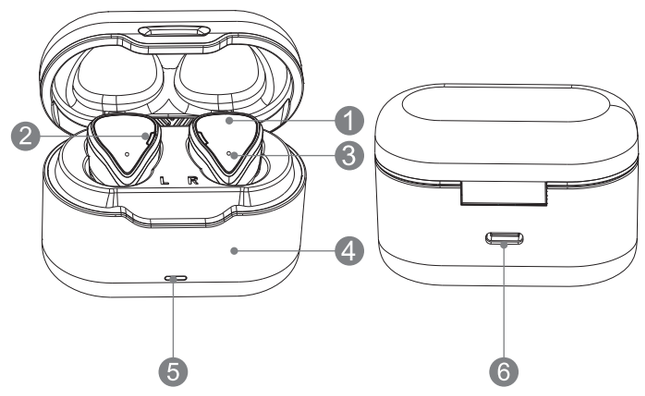

1. Touch Sensor
2. Earbud's Indicator
3. Microphone
4. Charging Case
5. Case's Indicator
6. USB Type-C Charging Port

Turn On and Turn Off

To turn on or off the earbuds, simply take them out from or put them back to the charging case.
Place your finger at the Touch Sensor for 5 seconds to turn ON or 5 seconds to turn OFF the earbuds, while not using the charging case.

Pairing

1. Take both earbuds out from the charging case.
2. While the earbuds are ready to use, the Right earbud indicator keeps flashing red and blue, and the Left earbud indicator flashes blue once every 5 seconds.
3. Put both earbuds onto your ears, and follow the voice prompt instruction to continue.
4. Activate the Bluetooth function of the device and search MSI CH40. Select MSI CH40 to connect it to the device.
5. Once MSI CH40 is connected to the device, both earbud indicators flash blue once every 5 seconds.

Note: If the MSI CH40 connection does not work properly, you may refer to "Troubleshooting" to continue.

Music

Be noted that the Touch Sensor of each earbud achieves the same result.

- Play:Touch the Touch Sensor once.
- Pause:Touch the Touch Sensor once when playing.
- Voice assistant:Double touch the Touch Sensor.
- Next:Triple touch the Touch Sensor when playing.
- Previous:Quadruple touch the touch Sensor when playing.

Phone

- Answer:Touch the Touch Sensor once to answer a calling.
- Hang up:Touch the Touch Sensor once to end a calling answered.
- Refuse: Long touch the Touch Sensor at least one second.

設備名稱 Equipment name：CH40 藍牙無線耳機 型號 (型式) Type designation (Type)：CH40 wireless earbuds						
單元 Unit	限用物質及其化學符號 Restricted substances and its chemical symbols					
	鉛Lead (Pb)	汞Mercury (Hg)	鎘 Cadmium (Cd)	六價鉻 Hexavalent chromium (Cr^{+6})	多溴聯苯 Polybrominated biphenyls (PBB)	多溴二苯醚 Polybrominated diphenyl ethers (PBDE)
印刷電路板	O	O	O	O	O	O
上/中/下蓋	O	O	O	O	O	O
按鍵	O	O	O	O	O	O
導光柱	O	O	O	O	O	O
USB 連接線	O	O	O	O	O	O
螺絲	O	O	O	O	O	O
腳墊	O	O	O	O	O	O
外箱貼紙	O	O	O	O	O	O

備考 1. "超出 0.1 wt %" 及 "超出 0.01 wt %" 係指限用物質之百分比含量超出百分比含量基準值。
Note 1: "Exceeding 0.1 wt%" and " exceeding 0.01 wt%" indicates that the percentage content of the restricted substance exceeds the reference percentage value of presence condition.

備考 2. "O"係指該項限用物質之百分比含量未超出百分比含量基準值。
Note 2: "O" indicates that the percentage content of the restricted substance does not exceed the percentage of reference value of presence.

備考 3. "–" 係指該項限用物質為排除項目。
Note 3 : "The "–" indicates that the restricted substance corresponds to the exemption.

产品中有毒有害物质或元素的名称及含量

部件名称	有害物质					
	铅 (Pb)	汞 (Hg)	镉 (Cd)	六价铬 (Cr(VI))	多溴联苯 (PBB)	多溴二苯醚 (PBDE)
印刷电路板组件*	O	O	O	O	O	O
外壳及附件	O	O	O	O	O	O

○：表示该有毒有害物质在该部件所有均质材料中的含量均在 SJ/T11363 2006 标准 规定的限量要求以下。
×：表示该有毒有害物质至少在该部件的某一均质材料中的含量超出 SJ/T11363 2006 标准规定的限量要求。
* 印刷电路板组件: 包括印刷电路板及其零部件、电子元器件等。
表中标有"X"的所有部件都符合欧盟 ROHS 法规。

在中华人民共和国境内销售的电子信息产品必须标示此标志。标志内的数字表示在正常的使用状态下的产品环保使用年限。

Micro-Star INT'L CO., LTD.
No.69, Lide St., Zhonghe Dist., New Taipei City 235, Taiwan
tel:+886-2-3234-5599 fax:+886-2-3234-5488
www.msi.com

Charging

It is always recommended to have the earbuds fully charged before using them for the first-time.

Earbuds

- Simply leave the earbuds within the charging case to have them recharged automatically,and both earbuds red.
- While the earbuds are ready to use,the earbud indicator keeps flashing red and blue for the main ear, and other earbud indicator flashes blue once for 5 seconds as auxiliary ear.
- Both earbud indicators flash red during charging.
- The indicators of both earbuds and charging case 10 seconds go off once the earbuds are all fully charged.
- While talking, the both earbuds indicators flashes red once for 5 seconds.

Note: Connect an external power supply to the charging case with a USB cable if the charging case does not work properly.
Note: Charge the earbuds when hearing a voice prompt telling Low Battery.

Charging Case

- The indicator flashes blue when the battery is in low capacity status.
- The indicator flashes red when charging with USB cable; the indicator glows red the charging case is fully charged.

Note: If the earbuds and the charging case are left aside for more than 2 weeks, please have them fully charged before using.

Troubleshooting

You may need to reset the earbuds if you encountered the situations as below

Connection failure between the earbuds and devices

- Place both earbuds back to the charging case.
- Long touch the touch sensors of both earbuds for more than 8 seconds to reset the earbuds.
- Delete the existing paring connection from the device.
- Repeat the Paring instructions to re-connect the earbuds to a device.

No sound response from one of the earbuds

- Put both earbuds onto your ears, and make sure the earbuds are turned ON.

- Place your fingers at the Touch Sensors of both earbuds for 3 seconds, and withdrew your fingers once hearing a beep.
- Place both earbuds back to the charging case.
- Take both earbuds out from the charging case, and put them onto your ears. Turn on the earbuds, and check the sound response of both earbuds.
- If there was still no sound responses from one or both earbuds, please reset the earbuds, and then reconnect the earbuds and the device.

Indicators Check Table

Indicator	Status
Left earbud: flashes blue Right earbud: flashes red and blue	Pairing
Both earbuds: flash blue	Paring completed
Both earbuds: glows red Charging case: glows blue	Charging the Earbuds
Both earbuds: flashes red	On the phone
Both earbuds: flashes red with low battery tone	Low battery
Charging case: flashes red	Charging the Charging case
Charging case: glows red	Charging case fully charged
Earbuds and charging case: indicators 10 seconds and go off	Charging: Earbuds are fully charged. Non charging: out of battery
Charging case: flashes blue	Low power state

簡 介

感謝選用 MSI CH40 藍牙無線耳機，此精心設計製作的產品將帶給您愉悅的聽覺體驗。
本手冊提供耳機的使用說明與圖示，幫助使用者認識產品並快速上手，建議您在使用產品前先行閱讀本手冊並妥善保管。

外觀檢視

1. 觸控感應器　2. 耳機指示燈號　3. 麥克風
4. 充電盒本體　5. 充電盒指示燈號　6. USB Type-C 充電孔

啟動與關閉

啟動或關閉耳機時，只需要將其自充電盒取出或放入即可。
於不使用充電盒時，讓手指在耳機的觸控感應器上，停留五秒可啟動耳機，或停留五秒可關閉耳機。

裝置配對

1. 將兩個耳機自充電盒取出。
2. 當右耳機持續交替閃爍紅燈與藍燈，而左耳機每五秒閃爍一次藍燈時，此付耳機處於待機可使用狀態。
3. 將耳機置入雙耳，並遵照語音提示進行下一步。
4. 啟動欲配對之裝置的藍牙功能，並搜尋 MSI CH40。選定 MSI CH40 來與裝置配對。
5. 當 MSI CH40 與裝置配對完成，兩個耳機的燈號都是每五秒閃爍一次藍燈。
   注意：若 MSI CH40 的配對連線無法確實執行，請參閱「問題排除」進行下一步。

音樂播放

兩個耳機的觸控感應器可作相同功能操作

- 音樂播放：輕觸一下觸控感應器
- 音樂暫停：音樂播放時，輕觸一下觸控感應器
- 語音助手：快速輕觸兩下觸控傳感器
- 下一首：音樂播放時，快速輕觸三下觸控感應器
- 上一首：音樂播放時，快速輕觸四下觸控感應器

通話功能

- 接聽：來電時，輕觸一下觸控感應器
- 掛斷：通話時，輕觸一下觸控感應器
- 拒接：來電時，長按觸控感應器至少一秒

充 電

第一次使用耳機前，建議務必將耳機完全充電。

耳 機

- 將耳機留置於充電盒內，即可自動為耳機充電，此時左右耳機亮紅燈。
- 左右耳機處於待機可使用狀態時，耳機紅藍閃爍的為主耳機，另一只耳機藍燈5秒閃一次為副耳。

- 充電時，兩個耳機的燈號持續亮紅燈。
- 當耳機充電完成時，耳機上藍燈會長亮10秒後熄滅，充電盒的指示燈10秒熄滅。
- 在耳機通話過程中，此時左右耳機會5秒一次紅燈閃爍。
  注意：若充電盒無法確實充電，請以 USB 連接線替充電盒接上外部電源。
  注意：當語音提示告知耳機為低電量狀態時，請為耳機充電。

充電盒

- 指示燈號閃爍藍燈時表示為低電量狀態。
- 以 USB 連接線為充電盒充電時，指示燈號閃爍紅燈；充電盒完成充電時，其指示燈為紅色。
  注意：當充電盒與耳機超過兩週沒有使用，請將其完全充電再開始使用。

問題排除

若遇到以下狀況，請重新設定耳機。

耳機與裝置的連線錯誤

- 將耳機置入雙耳，並確認耳機為開啟。
- 讓手指放在兩個耳機的觸控感應器上，停留三秒，一旦聽到嗶聲即讓手指離開觸控感應器。
- 將兩個耳機放回充電盒內。
- 將兩個耳機自充電盒取出，將耳機置入雙耳。開啟耳機，確認聲音回應。
- 如果單耳機或雙耳機仍是沒有聲音反應，請放入充電盒中取出即可復位重啟。

燈號顯示快查表

燈號顯示	狀態
左耳機：閃爍藍燈 右耳機：紅藍燈交替閃爍	配對
左右耳機：閃爍藍燈	配對完成
左右耳機：長亮 紅燈 充電盒：亮藍燈	耳機充電中
兩個耳機：閃紅燈	通話中
兩個耳機：閃紅燈並伴有低電提示音	耳機低電
充電盒：閃爍紅燈	充電盒充電中
充電盒：亮紅燈	充電盒完成充電
左右耳機及充電盒：耳機充滿電後藍燈10秒后熄滅 充電盒藍燈10秒熄滅	充電中： 充電中燈熄滅 非充電中：非充電中燈熄滅
充電盒：閃爍藍燈	低電量

简 介

感谢选择 MSI CH40 蓝牙无线耳机，此款精心设计制作的产品将带给您愉悦的听觉体验。
本指南提供耳机的使用说明与图示，帮助您认识产品并快速上手，建议您在使用产品前先阅读本指南并妥善保管。

概 述

1. 触摸传感器　2. 耳机指示灯　3. 麦克风
4. 充电盒　5. 充电盒指示灯　6. USB Type-C 充电端口

打开和关闭

打开或关闭耳机时，只需要将其从充电盒取出或放入即可。
于不使用充电盒时，让手指在耳机的触控传感器上，停留五秒可启动耳机，或停留五秒可关闭耳机。

装置配对

1. 将两个耳机从充电盒取出。
2. 当右耳机指示灯持续交替闪烁红色与蓝色，且左耳机指示灯每五秒闪烁一次蓝色时，此副耳机处于待机可使用状态。
3. 将耳机置入双耳，并遵照语音提示进行下一步。
4. 激活欲配对设备的蓝牙功能并搜寻 MSI CH40。 选择 MSI CH40 将其连接到设备。
5. 将 MSI CH40 连接到设备后，两个耳机指示灯都会每5秒闪烁一次蓝色。
   注意：若 MSI CH40 的配对联机无法确实执行，请参阅「问题排除」进行下一步。

音乐播放

请注意，每个耳机的触摸传感器都能达到相同的效果。

- 播放：轻触一下触控传感器
- 暂停：音乐播放时，轻触一下触控传感器
- 语音助手：快速轻触两下触控传感器
- 下一首：音乐播放时，快速轻触三下触控传感器
- 上一首：音乐播放时，快速轻触四下触控传感器

通话功能

- 接听：来电时，轻触一下触控传感器
- 挂断：通话时，轻触一下触控传感器
- 拒接：来电时，长按触控传感器至少一秒

充 电

第一次使用耳机前，建议务必将其充满电。

耳 机

- 将耳机留置于充电盒内，即可自动为耳机充电，此时左右耳机亮红灯。
- 左右耳机处于待机可使用状态时，耳机红蓝闪烁的为主耳，另一只耳机蓝灯5秒闪一次为副耳。

- 充电时，两个耳机的指示灯持续亮红色。
- 当耳机充电完成时，耳机上蓝灯会长亮10秒后熄灭，充电盒的指示灯10秒熄灭
- 在耳机通话过程中，此时左右耳机会5秒一次红灯闪烁
  注意：如果充电盒无法正常工作，请使用 USB 电缆将外部电源连接到充电盒。
  注意：当听到语音提示"电池电量不足"时，请为耳机充电。

充电盒

指示灯闪烁蓝色时表示为低电量状态。

- 用 USB 电缆为充电盒充电时，指示灯闪烁红色；充电盒完成充电时，其指示灯亮红色。
  注意：当充电盒与耳机超过两周没有使用，请将其充满电再开始使用。

问题排除

若遇到以下状况，请重新设定耳机。

耳机与装置的联机错误

- 将耳机置入双耳，并确认耳机为开启。
- 让手指放在两个耳机的触控传感器上，停留三秒，一旦听到哔声即让手指离开触控传感器。
- 将两个耳机放回充电盒内。
- 将两个耳机自充电盒取出，将耳机置入双耳。开启耳机，确认声音响应。
- 如果单耳机或双耳机仍是没有声音反应，请放入充电盒中取出即可复位重启。

指示灯显示检查表

指示灯显示	状态
左耳机：闪烁蓝色 右耳机：红色和蓝色交替闪烁	配对
两个耳机：闪烁蓝色	配对完成
两个耳机：长亮 红色 充电盒：亮蓝色	耳机充电中
	通话中
两个耳机：闪红灯并伴有电量低提示音	耳机低电
充电盒：闪烁红色	充电盒充电中
充电盒：亮红色	充电盒完成充电
耳机及充电盒：耳机充满电后蓝灯10秒后熄灭 充电盒蓝灯10秒熄灭	充电中：充电中灯熄灭 非充电中：非充电中灯熄灭
充电盒：闪烁蓝色	低电量状态

FCC Compliance Statement

This device complies with Part 15 of the FCC Rules. Operation is subject to the following two conditions: (1) this device may not cause harmful interference, and (2) this device must accept any interference received, including interference that may cause undesired operation.

This equipment has been tested and found to comply with the limits for a Class B digital device, pursuant to Part 15 of the FCC Rules. These limits are designed to provide reasonable protection against harmful interference in a residential installation.
This equipment generates, uses and can radiate radio frequency energy and, if not installed and used in accordance with the instructions, may cause harmful interference to radio communications. However, there is no guarantee that interference will not occur in a particular installation.
If this equipment does cause harmful interference to radio or television reception, which can be determined by turning the equipment off and on, the user is encouraged to try to correct the interference by one or more of the following measures:
– Reorient or relocate the receiving antenna.
– Increase the separation between the equipment and receiver.
– Connect the equipment into an outlet on a circuit different from that to which the receiver is connected.
– Consult the dealer or an experienced radio/TV technician for help.

Any changes or modification not expressly approved by the party responsible for compliance could void the user's authority to operate the device. Where shielded interface cables have been provided with the product or specified additional components or accessories elsewhere defined to be used with the installation of the product, they must be used in order to ensure compliance with FCC regulations.

ISED Compliance Statement

This device contains licence-exempt transmitter(s)/receiver(s) that comply with Innovation, Science and Economic Development Canada's licence-exempt RSS(s). Operation is subject to the following two conditions: (1)This device may not cause interference.(2)This device must accept any interference, including interference that may cause undesired operation of the device.

L'émetteur/récepteur exempt de licence contenu dans le présent appareil est conforme aux CNR d'Innovation, Sciences et Développement économique Canada applicables aux appareils radio exempts de licence. L'exploitation est autorisée aux deux conditions suivantes :(1)L'appareil ne doit pas produire de brouillage; (2)L'appareil doit accepter tout brouillage radioélectrique subi, même si le brouillage est susceptible d'en compromettre le fonctionnement.

RF Exposure Statement

This equipment complies with FCC/IC RSS-102 radiation exposure limits set forth for an uncontrolled environment. This equipment should be installed and operated with minimum distance 20cm between the radiator and your body.

Cet équipement est conforme aux limites d'exposition aux radiations FCC/IC CNR-102 établies pour un environnement non contrôlé. Cet équipement doit être installé et utilisé avec une distance minimale de 20 cm entre le radiateur et votre corps.

低功率射頻電機警語: (低功率射頻電機適用)

經形式認證合格之低功率射頻電機，非經許可，公司、商號或使用者均不得擅自變更頻率、加大功率或變更原設計之特性及功能。
低功率射頻電機之使用不得影響飛航安全及干擾合法通信；經發現有干擾現象時，應立即停用，並改善至無干擾時方得繼續使用。前項合法通信，指電信法規定作業之無線電通信。低功率射頻電機須忍受合法通信或工業、科學及醫療電波輻射性電機設備之干擾。