Osaki

Ai SERIES

Osaki OS - Trion Flex Duo 4D+3D

INSTRUCTION MANUAL

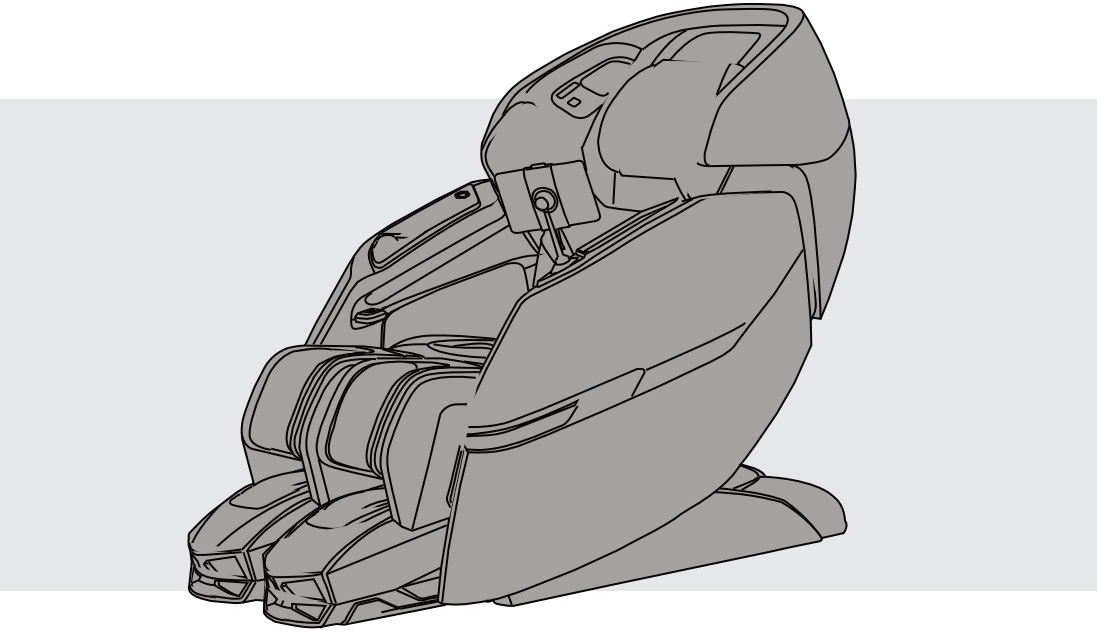

Please read all instructions carefully before using.

IMPORTANT SAFETY INSTRUCTIONS

Read all instructions before using.

DANGER – To reduce the risk of electric shock:
1) Always unplug this appliance from the electrical outlet immediately after using and before cleaning.

WARNING – To reduce the risk of burns, fire, electric shock, or injury to persons:
1) An appliance should never be left unattended when plugged in. Unplug from outlet when not in use, and before putting on or taking off parts.
2) Do not operate under blanket or pillow. Excessive heating can occur and cause fire, electric shock, or injury to persons.
3) Close supervision is necessary when this appliance is used by, on, or near children, invalids, or disabled persons.
4) Use this appliance only for its intended use as described in this manual. Do not use attachments not recommended by the manufacturer.
5) Never operate this appliance if it has a damaged cord or plug, if it is not working properly, if it has been dropped or damaged, or dropped into water. Return the appliance to a service center for examination and repair.
6) Do not carry this appliance by supply cord or use cord as a handle.
7) Keep the cord away from heated surfaces.
8) Never operate the appliance with the air openings blocked. Keep the air openings free of lint, hair, and the like.
9) Never drop or insert any object into any opening.
10) Do not use outdoors.
11) Do not operate where aerosol (spray) products are being used or where oxygen is being administered.
12) To disconnect, turn all controls to the off position, then remove plug from outlet.
13) Do not use massager in close proximity to loose clothing or jewelry.
14) Keep long hair away from massager while in use.
15) Use heated surfaces carefully.May cause serious burns.Do not use over insensitive skin areas or in the presence of poor circulation.The unattended use of heat by children or incapacitated persons may be dangerous.

SAVE THESE INSTRUCTIONS

For household use only.

TECHNICAL SPECIFICATIONS

Name: Deluxe Multi-function Massage Chair
Model:Osaki OS - Trion Flex Duo 4D+3D
Rated voltage: 110-120V~
Rated frequency:60Hz
Rated current: 2.38A

Thank you for purchasing this product.
Please read this user manual carefully before using to ensure proper installation and operation.
Please keep this USER MANUAL properly for future reference.

CONTENTS

SAFETY PRECAUTIONS 1
NAME AND FUNCTION OF EACH COMPONENT 3
External Structure 3
Internal Structure 3
Power Box 4
Armrest Quick Buttons 5
Instructions of Armrest Quick Buttons 5
FUNCTIONS AND FEATURES 7
PRELIMINARY CHECKS 8
Position & Placement for Installation 9
Floor Protection 10
Surrounding Environment 10
Grounding 10
Installation Method 11
Moving the Massage Chair 15
Connecting to Power 15
Commissioning 16
Before Sitting in the Chair 16
After Use 16
PRODUCT CARE AND STORAGE 17
TROUBLESHOOTING 18
TECHNICAL SPECIFICATIONS 19

SAFETY PRECAUTIONS

Safety Precautions

▶Before using, please read the SAFETY PRECAUTIONS carefully to ensure correct operation of this appliance.

▶Precautions and warnings listed below will help to ensure proper operation of this appliance.

▶The classes of accidents caused by incorrect use are classified into WARNING and CAUTION.Read all WARNINGS and CAUTIONS below and follow all instructions within this manual.

WARNING	Improper operation may cause injury to users.
CAUTION	Improper operation may cause injury to users or damage to product.

	Prohibited		NO Disassemble

Not suitable for the following persons

We recommend that those with any of the following conditions should consult your physician before using.

WARNING	◆Those with pacemaker or electronic devices implanted in the body. ◆Those undergoing treatment, especially those who are not feeling well. ◆Those with malignant tumors,acute disease,heart disease or severe hypertension. ◆Need to be supervised. ◆Women who are pregnant or menstruating. ◆Those with osteoporosis,distorted joints,dysfunction or recent fracture. ◆Those with serious or injured skin conditions. ◆Those with high fever. ◆The appliance has a heated surface. Persons insensitive to heat must be careful when using the appliance.（Need to be supervised） ◆This appliance is not intended for use by persons (including children) with reduced physical, sensory or mental capabilities, or lack of experience and knowledge, unless they have been given supervision or instruction concerning use of the appliance by a person responsible for their safety. ◆This appliance can be used by children aged from 8 years and above and persons with reduced physical, sensory or mental capabilities or lack of experience and knowledge if they have been given supervision or instruction concerning use of the appliance in a safe way and understand the hazards involved.

Controller Precautions

CAUTION	◆Do not operate the controller with wet hands or pull the controller wire by force. ◆Do not spill water or other liquid into the controller to avoid fault. ◆Do not lay heavy items on the controller.

Cautions Regarding the Power Connectors and Power Cord

CAUTION	◆The appliance is only to be used with the power supply unit provided with the appliance. ◆It must only be supplied at safety extra low voltage corresponding to the marking on the appliance. ◆Do not use a wet hand to unplug the AC cord to avoid electric shock. ◆Do not pull on the power cord,reach to the front end to unplug it. ◆Do not squeeze the power cord by heavy objects. ◆Do not damage,over bend,pull hard or twist the power cord. ◆If the supply cord is damaged, it must be replaced by the manufacturer or its service agent or a similarly qualified person in order to avoid a hazard.

TROUBLESHOOTING

No.	Symptoms	Possible Causes	Possible Solutions
1	Noise is heard while in use	This sound is normal and comes from the air pump motor or other mechanical parts rubbing against the cloth cover	No need to take any measures
2	Appliance does not start	The power cord is not secured into the socket	Insert the power plug properly into the power socket
		Power switch is off	Turn on the switch
		The fuse is blown	Replace only with a fuse of same type and rating
3	No music comes from the speaker	The volume is turned to the lowest	Adjust the speaker volume from the mobile devices
		Bluetooth is off	Switch on Bluetooth
		Bluetooth connected with other device	Reconnect Bluetooth
4	Backrest or footrest can not raise or recline	Excessive load has been pressed on the backrest or legrest	Reduce the load and try again
5	Airbag malfunction	The air hose is blocked	Straighten the air hose and clear out the blockage

If problem remains, please contact the dealer for maintenance.

Important: Do not attempt to repair this product yourself,our company shall not be liable for the injury or damage caused by any servicing without authorization.

CARE AND MAINTENANCE

Care Instructions

- ▶To treat stains on back panel,armrest,footrest,plastic parts or air hose,spot clean with mild detergent foam,then wipe it with a dry cleaning cloth.
- ▶To treat stains on controller,power box,spot clean with a dry cleaning cloth.
- ▶To treat stains on back cushion or pillows,use a water-based upholstery cleaner only,wipe it with moist cloth,then air dry.
- ▶To clean the foot/calf unit covers,remove them from the chair,hand wash with a mild detergent, then line dry.

WARNING

- ▶ Children shall not play with the appliance. Cleaning and user maintenance shall not be made by children without supervision.
- ▶ Pull out the power cord from the power strips before care and maintenance.
- ▶ To avoid electrical shock or injury,do not touch the power cord with wet hands.
- ▶ Make sure no detergent enter into the power box while cleaning.
- ▶ Do not use benzene,thinner or other solvents on your product,it may cause fading or damage to the product.
- ▶ Do not iron the upholstery.

Storage Methods

- ▶ Cover the product with a dust-free cloth to prevent collection of dust if not in use of a long period of time.

CAUTION

- ▶Do not leave this product exposed to direct sunlight for long periods of time. This may cause fading or damage.

Warm Tips

During daily use, please check for the following symptoms:

- ▶ Burnt smell.
- ▶ Power flickers on and off when touching the charging cable.
- ▶ The power cord is hot.
- ▶ Other abnormal symptoms.

CAUTION

- ▶ Please stop using the product to avoid breakdowns or accidents if any above symptom exists.
- ▶ Switch off the power button and disconnect the plug , contact the local distributors or supplier for repair.
- ▶ All other servicing except above care and maintenance should be serviced by an authorized dealer or service center.

WARNING Pull out the power cord from the power strips before care and maintenance. To avoid electrical shock or injury,do not touch the power cord with wet hands. Do not try to dismantle or repair the product yourself,please send your massage chair to the authorized service center.

SAFETY PRECAUTIONS

Best Circumstances

CAUTION	◆ Do not use this appliance where the temperature is over 40C / 104F. ◆ Do not use this appliance in moist or dusty environment. ◆ Unplug from outlet during thunder or lightening storms. ◆ Do not use outdoors. ◆ Please place the product on the flat level floor. ◆ Do not store near heat or open flame.

Best Practices for Safe Use

CAUTION	◆Only for users weights below 120kg / 265lbs. ◆Do not use other therapeutic device together with this product. ◆Use this product only for its intended use as described in this manual. ◆Appliance should only be used by one person,do not use by two or more persons at the same time to avoid damage to the products. ◆Do not use the product right after meal, it may cause discomfort. ◆Remove the accessories from the arms and empty the pockets while use the massage services. ◆Check the upholstery under the cushions and other spots, if any damages are present, do not use it and refer to a qualified service professional for servicing. ◆If you feel any abnormal discomfort during the operation of this product, turn off the power immediately and do not use the product. ◆Use the appliance for 20 minutes each time is highly recommended. ◆Make sure there are no obstacles behind the chair and there is enough clearance before adjusting the backrest or footrest angle ◆Make sure no other excessive load pressed on the backrest or footrest,keep children,pets or any other barrier away from the unit reclining backrest/extending footrest to prevent any accidental injury. ◆Please be seated properly while using the appliance to avoid injury to the user or damage to the appliance. ◆Do not drag or push the chair or roll on its casters on wood floor or carpet to avoid damage.
PROHIBITED	◆ Never operate this product if it has damaged /exposed parts or power leakage. ◆ Do not stand on or stack heavy objects on the footrest. ◆ Children should be supervised to ensure that they do not play with the massage chair. ◆ Do not fall into sleep while the product is operating. ◆ Avoid using the product under the influence of alcohol. ◆ Do not put hands or foreign objects in the openings of the appliance to avoid injury to the user or damage to the appliance. ◆ If there is any smoke or unusual smell during operation,stop using immediately.
NO DISASSEMBLE	◆Do not disassemble this product to avoid failure. ◆Do not attempt to repair or dismantle the appliance without permission. ◆Please contact authorized dealer or service agent.
UNPLUG POWER CORD	◆Pull out the power cord from the power strips before maintenance. ◆Never plug in or pull out power cord with wet hand to avoid shock or injury. ◆Pull out the power cord from the power strips after use. ◆Unplug from outlet when the power supply is cut.

NAME AND FUNCTION OF EACH COMPONENT

External Structure

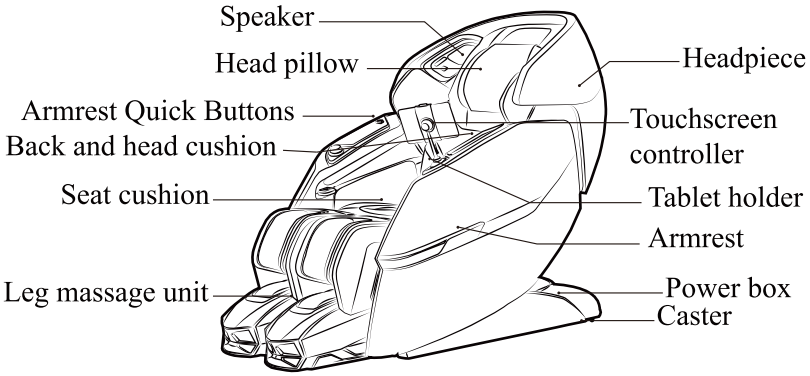

Internal Structure

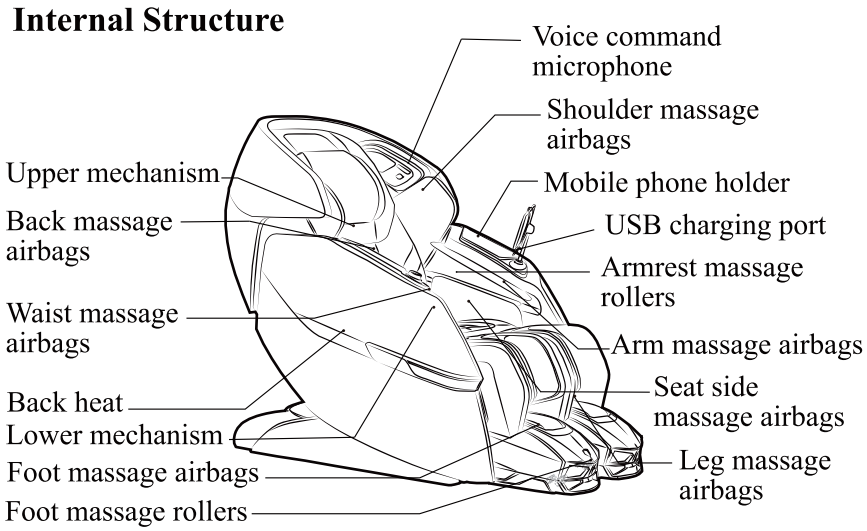

PRELIMINARY CHECKS

Commissioning

- Use the controller to recline the backrest to its lowest position,raise and extend the footrest to its top position, make sure there is enough clearance before commissioning.
- Return the backrest and footrest back to its default position after commissioning and turn off the power switch. （To choose the massage program, please check the Instructions of Control Buttons and Instructions of Tablet Controller for reference.）

Before Sitting in the Chair

- Ensure the footrest is well assembled before sitting on the massage chair.
- Ensure the massage chair is returned to its original position before sitting on it.If there is any part not in default position,please turn on the massage chair to allow it to restore.

CAUTION

- Do not take seat while the legrest is lifted.
- Do not put excessive load on the legrest to avoid damage.

Feet Extension

- You may extend or retract the footrest to the length you desire for better massage experience by using manual - leg extend / retract on the controller (make sure there is enough clearance) ,release the button to fix the position.

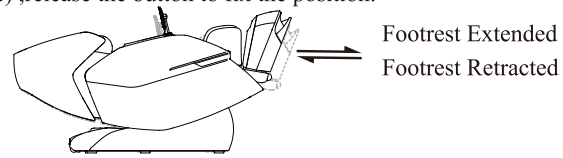

- A footrest sensor is set at the bottom of footrest,the footrest will adjust the length automatically once the chair started.

WARNING

- Do not play on the massage chair or operate it improperly.
- Ensure there is no obstruction when raising or reclining the backrest and footrest.
- Do not put foot,fingers or any other objects in the openings of the chair when it is in the reclining,raising or restoring motion.
- Ensure that massage chair is restored back to its original position before getting off the massage chair.

After Use

- Always unplug the massage chair from the electrical outlet immediately after use.
- Turn off the power switch and unplug the massage chair from the electrical outlet while not in use to avoid children power on the massage chair accidentally.
- When not in use for a long period of time,we recommend that the chair be covered, the power cord be coiled and that the unit be placed in an environment free of dust and moisture.

PRELIMINARY CHECKS

Moving the Massage Chair

- ▶ Roll the chair on its casters to the desired location.
- ▶ Incline the backrest to upright position.
- ▶ Turn off the power switch and unplug the appliance from the electrical outlet.
- ▶ Using two people,push down on the backrest and lift up on the front side by grabbing the moving Holder located to the front bottom of the armrest),roll the chair on its casters to the desired location(check the sketch for reference).

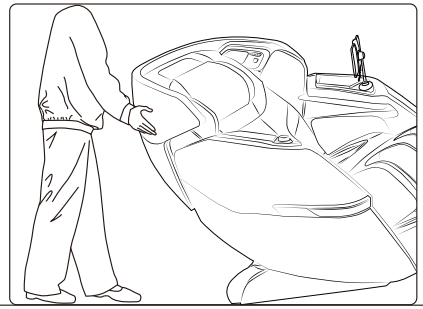

CAUTION

- ▶ Do not move the chair when there is user inside.
- ▶ To carry this product, do not lift by the footrest or armrest,hold the chassis and steady the backrest(have 4 or more people to carry the product).

Connecting to Power

- ▶ Connect this appliance to a 3-wire properly grounded outlet.
- ▶ Turn on the main power switch by the right hand side of the massage chair.

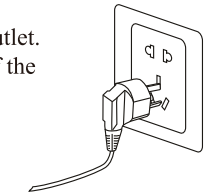

CAUTION

- ▶ Please verify that there is no damage to the supply cord before switching on the massage chair.
- ▶ Please verify that the main power switch is turned off before connecting to power.

NAME AND FUNCTION OF EACH COMPONENT

Power box

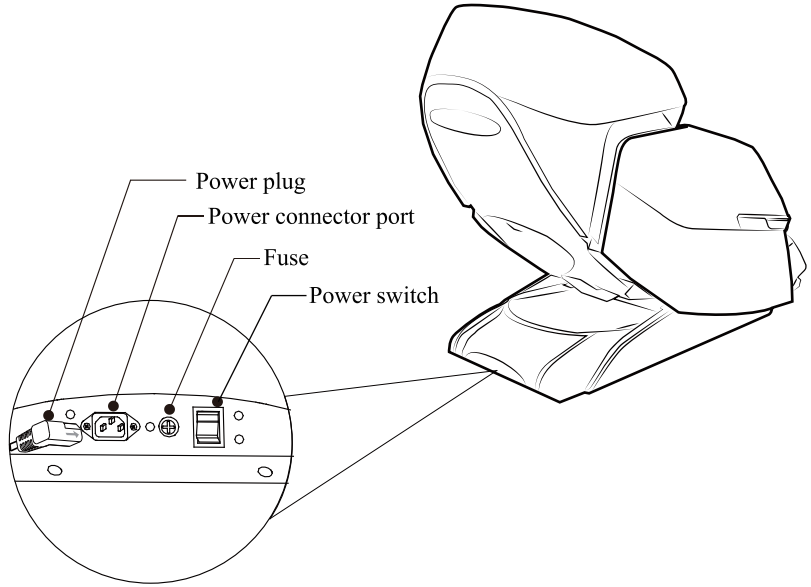

Caution

- ▶ Children should be supervised to ensure that they do not play with the chair or touch the power box.
- ▶ Always unplug the massage chair from the electrical outlet immediately after use.
- ▶ Unplug from outlet during thunder or lightning storms.
- ▶ Turn off the power switch and unplug the massage chair from the electrical outlet while not in use to avoid children power on the massage chair accidentally.
- ▶ When not in use for a long period of time,we recommend that the chair be covered, the power cord be coiled and that the unit be placed in an environment free of dust and moisture.

NAME AND FUNCTION OF EACH COMPONENT

Armrest Quick Buttons

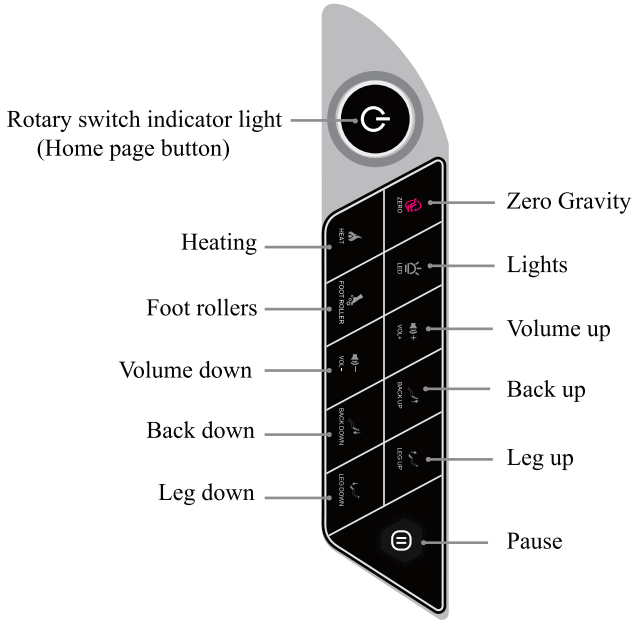

Controller Instructions

Power / Auto massage

▶ Indicator lights up yellow in standby mode and turns into white when power on.Press and hold to power on/off the massage chair,quick press to toggle auto massage programs.

Zero Gravity Button

▶Press to put massage chair into Zero Gravity position,the indicator light of the button turns green when Zero Gravity Position 1 is chosen, it turns blue when Zero Gravity Position 2 is chosen.

Heating Button

▶Press to turn on level 1 heating ,the indicator light of the button turns green, press again to switch to level 2 heating,the indicator light of the button turns yellow accordingly,press for the third time to switch to level 3 heating,the indicator light of the button turns red,press for the fourth time to turn off heating function,the indicator light of the button turns white.

PRELIMINARY CHECKS

▶ Attach the plastic legrest connector onto the legrest rotation shaft. Lift up the black metal legrest hook and attach the legrest. Lower the hook and screw in place.

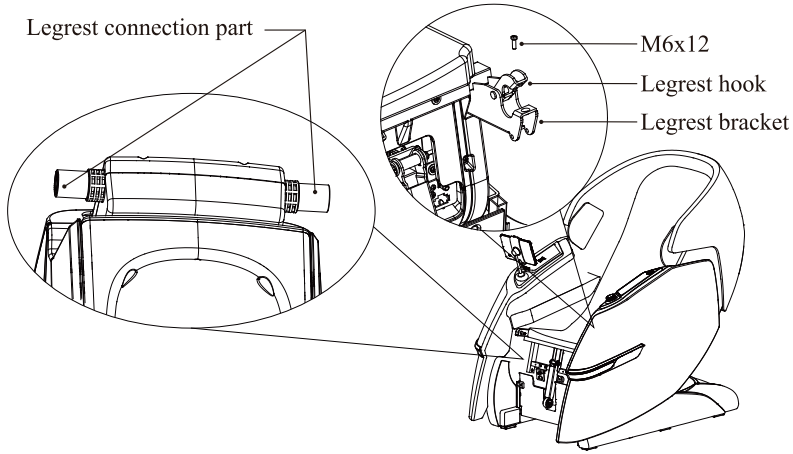

Step 6 , Other Accessories

▶ Connect the power cable to the product power socket located at the bottom of right armrest.

▶ Connect power to chair,switch ON the power button,use the controller to raise the backrest to fully upright position.

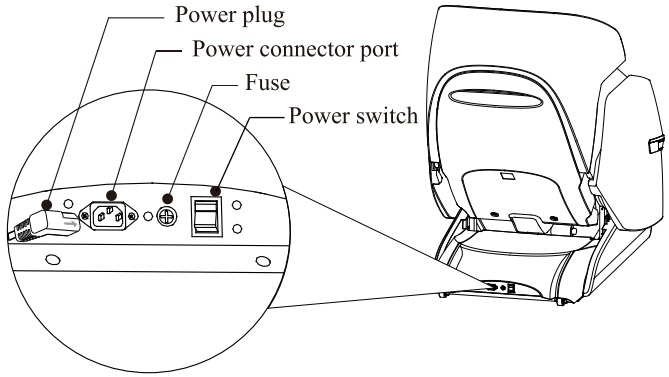

Step 4 , Install Touchscreen Controller Holder

▶Connect the controller cable to the massage chair's port (line up the pins with the port before connection),then tighten the screw cap clockwise to secure the connector in place.

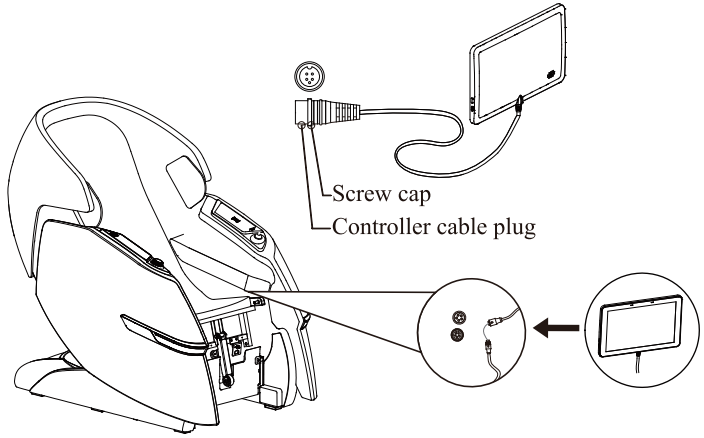

Step 5, Install the Footrest Unit

▶ Raise the legrest unit,thread the air hose into the air nozzle,and fit the air valve plug into the air valve port which located at the face side of seat base,make sure they are well secured.

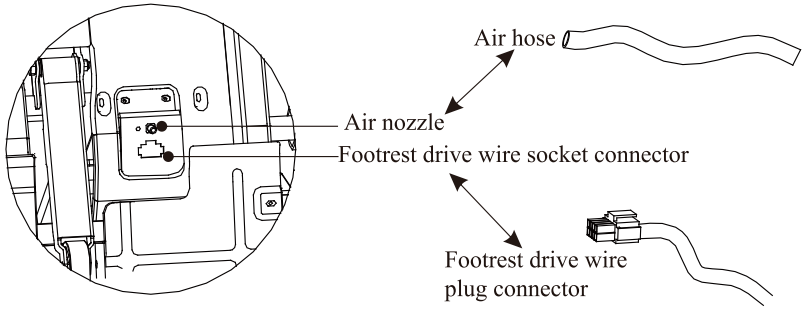

Controller Instructions

LED

Lights Button

▶Press to turn on ambient lights: the button indicator turns blue when the ambient lights of the speakers,armrests and legrests are on; The button indicator turns white when the ambient lights of the speakers,armrests and legrests are off.

FOOT ROLLER

Foot Roller Button

▶ Press this button to toggle among foot rolling speed level 1,foot rolling speed level 2, foot rolling speed level 3 with blue indicator light and foot rolling off with white indicator light.

VOL+

Volume Up

▶The indicator light of the button displays white when press this button to increase the volume, it turns blue when the maximum volume is reached.

VOL−

Volume Down

▶The indicator light of the button displays white when press this button to decrease the volume, it turns blue when the minimum volume is reached.

BACK UP

Back Up

▶ Press and hold to raise the backrest(blue indicator flashes)to the limit position(indicator turns steady blue); release the button to stop(indicator turns white).

BACK DOWN

Back Down

▶Press and hold to recline the backrest(blue indicator flashes)to the limit position(indicator turns steady blue); release the button to stop(indicator turns white).

LEG UP

Legs Up

▶Press and hold to raise the legrest(blue indicator flashes)to the limit position(indicator turns steady blue); release the button to stop(indicator turns white).

LEG DOWN

Legs Down

▶Press and hold to lower the legrest(blue indicator flashes)to the limit position (indicator turns steady blue); release the button to stop(indicator turns white).

Pause

▶Press to pause / resume the massage chair functions.

FUNCTIONS AND FEATURES

1. One-Press Control Sliding

It will slide forward by 28cm / 11 inches and recline afterwards.Glider recliner linkage mechanism to save space and provide utmost relaxing position.

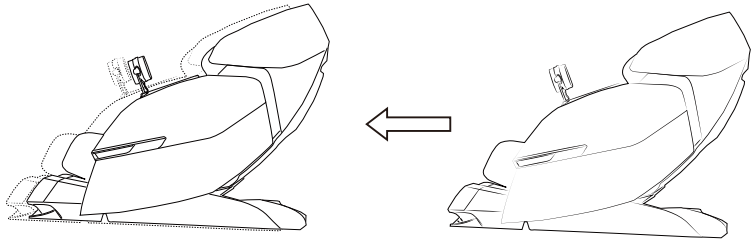

2.Zero Gravity

At such a weightless position that the height of the legs slightly higher than the upper body,the weight of body can evenly distributed throughout,reducing the pressure of the spine and joints both physically and mentally.

3. Auto/Manual Footrest Extension

The footrest can extend automatically to customize the user's leg length,you may also use the controller button to adjust the footrest according to your needs.The footrest can extend by 15cm / 5.9 inches automatically for various users of different height ranges

4. Air Pressure Massage

Whole body air pressure massage for shoulders,arms,back,waist,hips,legs and feet.

5. Rolling Massage

Three-row of rollers provide hand simulation rolling and shiatsu massage for the sole reflex zone.

6.Versatile Massage Techniques

Mimic human hand Kneading,Tapping,Knocking,Shiatsu,Sync and 4D Shiatsu massage techniques for custom-tailored relaxation.

7. Off-line Voice Control

Intelligent voice control system meets the demands for easier control.

8. Dual-core massage

4D deep tissue massage Mech and specialized waist&buttock Mech coupled with body scanning system to provide a multi-angle,perfect fitting massage for the users.

9.Innovative flexible guide track

mechanism travel distance increased from 1160mm / 45.7 inches to 1210mm / 47.6 inches, delivering three dimensional massage along neck,shoulder,the entire length of the spine, and all the way down to hips and thighs.

PRELIMINARY CHECKS

▶ Hold the armrest unit up and hook the bracket 2 onto the carrier groove,slowly push the armrest unit back into the chair linkage until bracket 2 aligns completely with bracket 4,insert bracket 1 into bracket 3,use a screw to secure the armrest into place. (Same installation method with the other side)

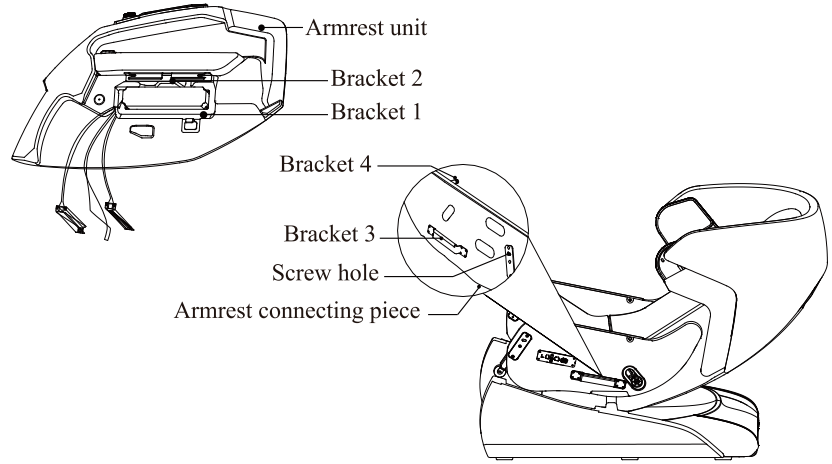

Step 3, Install Touchscreen Controller Holder

▶Insert the lower end of Tablet Controller holder into the socket,turn the nut clockwise to secure the holder into place.

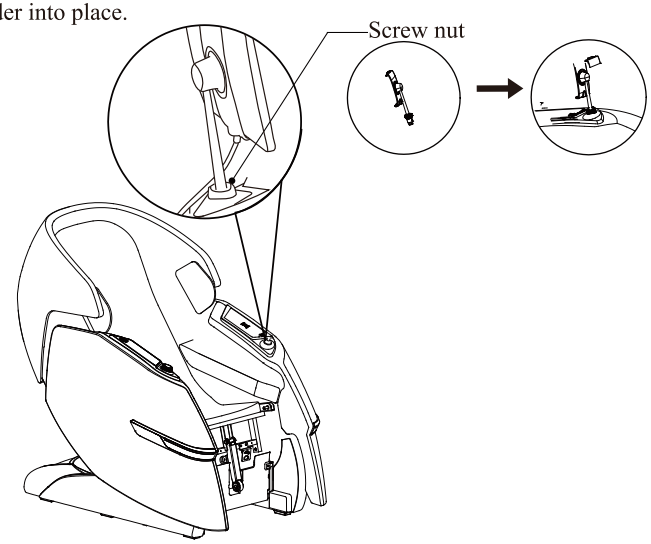

Installation Method

Step 1, Take all massage chair units out of the cartons.

- ▶ Unpack the cartons and take all sewing and other accessories out of the cartons.
- ▶ Before beginning installation, please verify that all components are included(check with the packing list carefully)

Step 2: Install Armrest Unit

- ▶ Connect the air hoses of the armrest unit to the matching nozzles. (Same installation method with the other side)

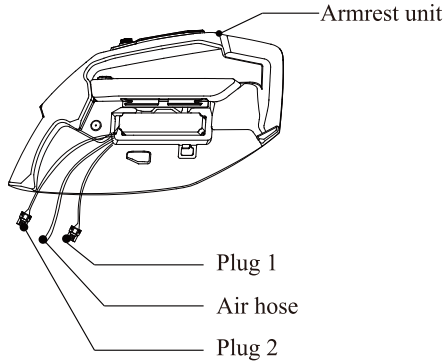

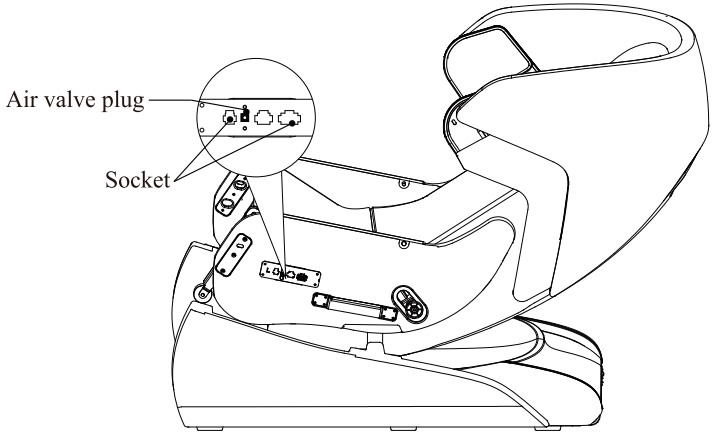

Off-line Voice Control

Voice control function can be activated by touching the square shaped groove on left-side speaker box or speaking “Hi Osaki” or “Hey Osaki” .(Massage chair need to be turned on.)

Position & Placement for Installation

Clearance space for the massage chair:

- ▶ Ensure there is an adequate clearance for the installation:It needs 10cm clearance for the reclining of the backrest;It needs 60cm clearance space for the extension of footrest and sliding forward of the chair.
- ▶ Keep it 1 meter away from the TV,radio or other audio/video appliance to avoid signal interference.

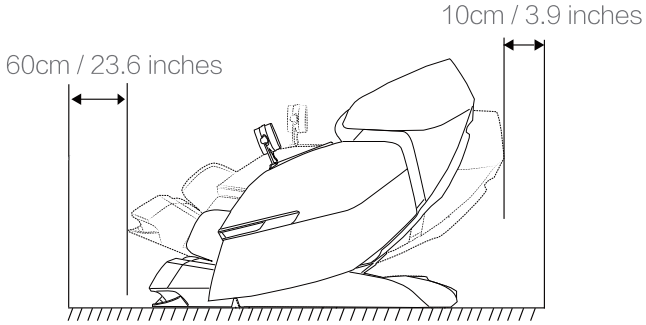

▶ Keep the distance between the power socket and power switch within 1.5 meters.

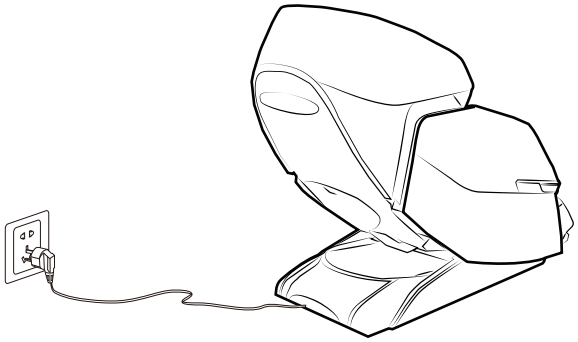

CAUTION

- ▶ Keep the distance between the power socket and power switch within 1.5 meter to avoid damage of power cord while massage chair sliding forward.
- ▶ Straighten the power cord while in use to avoid tangle or damage.
- ▶ When the massage chair is sliding forwards or back,please check to make sure there are no children,pets or other obstacles around to avoid accident.

PRELIMINARY CHECKS

Floor Protection

- ▶ We recommend to place a piece of carpet or soft mat underneath it to avoid damaging the floor.

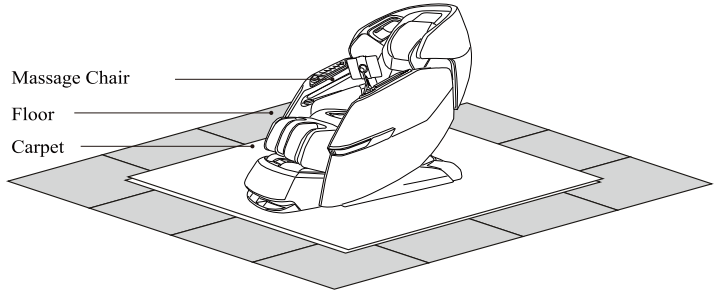

Surrounding Environment

Do not use the massage chair in high moisture environment such as near swimming pool or bathroom to prevent electric shock accident.

Please keep the massage chair away from heated surfaces to prevent fire hazard or damage to the product.

Grounding

This product must be grounded, the plug must be plugged into an appropriate 3-wire grounded outlet that is properly installed and grounded in accordance with all local codes and ordinances to reduce risk of electrical shock.