CUT SIZE: 5"W x 4"H

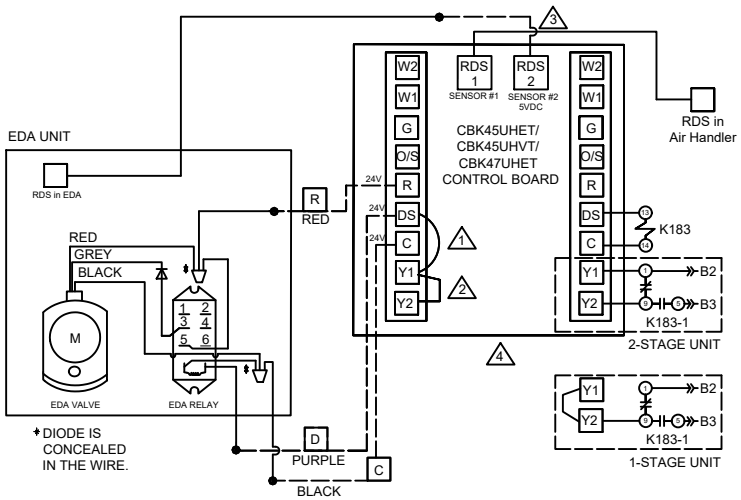


| DESCRIPTION | |
|---|---|
| KEY | COMPONENT |
| RDS | A2L LEAK SENSOR |
| K183 | INDOOR BLOWER RELAY |

NOTE: IF ANY WIRE IN THIS APPLIANCE IS REPLACED, IT MUST BE REPLACED WITH WIRE OF LIKE SIZE, RATING, INSULATION THICKNESS AND TERMINATION.

1. DS-Y1 JUMPER - MUST BE REMOVED FOR HUMIDITROL OPERATION
2. Y1-Y2 JUMPER - ONLY REMOVE IF 2-STAGE COOLING
3. RDS SENSOR in EDA UNIT MUST BE INSTALLED IN SENSOR #2 LOCATION

CONNECT LOW VOLTAGE EDA HARNESS TO CONTROL BOARD IN AIR HANDLER FOR HUMIDITROL OPERATION

4. REFER TO EDA INSTALLATION INSTRUCTION, REPLACE THE CONTROL BOARD IN AIR HANDLER (1 RDS INPUT) WITH CONTROL BOARD SHIPPED WITH THE EDA (2 RDS INPUT) FOR HUMIDITROL OPERATION

EDA 024B, 036C, 060D
WIRING DIAGRAM

Form No.
**538621-01**

Litho U.S.A.