Installation Guide

Heavy Duty 4-Speed EV Transmission PTO Installation Guide TRPT2200

August 2025

EMA-26N0304A

Powering Business Worldwide

BACKED BY Roadranger SUPPORT

Important Information 1
PTO Configuration and Location 2
PTO - Transmission Interface 3
PTO Modes 6
PTO Operation Modes 6
PTO Control Modes 6
PTO Controlled by Transmission Controller (Analog) 7
PTO Controlled by Body Controller 8
PTO Controlled by Transmission Controller Using J1939 Request from Body Controller 9
PTODE Message Parameters 11
Source Addresses 11
PTO Wiring 12
Troubleshooting PTO Operation 12
PTO Operation 13
PTO Configurable Options 14
PTO Engaged Shifting 14
Maximum Motor Speed and Vehicle Speed 14
38-Pin Vehicle Harness Connector 15
Transmission Lubrication 17
Lubrication Fill Procedure with PTO Installed 18
Change Control Log 19

© 2025 Eaton Corporation. All rights reserved

Important Information

This symbol is used throughout this manual to call attention to critical information where failure to adhere to safety specifications may result in personal injury and/or component damage.

Departure from the instructions, choice of tools, material or recommended parts mentioned in this publication may jeopardize safety.

Safety Requirements:

Safety related requirements placed on the vehicle system by the transmission. Failure to comply may disable key and/or redundant safety features of the transmission system.

DANGER: Failure to follow indicated procedures will result in death or serious injury.

WARNING: Failure to follow indicated procedures and/or safety requirements could result in death or serious injury.

CAUTION: Failure to follow indicated procedures could result in minor or moderate injury.

NOTICE: Failure to follow indicated procedures could result in damage to the transmission system.

WARNING: While working on a vehicle, do not modify transmission components or systems. Modification (altering, substituting, relocating) of transmission components may result in major vehicle component damage, severe injury or death.

This publication has been assembled to assist the original equipment manufacturer (OEM) with proper design integration, handling and assembly of PTO on xEV HD 4-Speed transmissions. For additional information such as transmission operation, troubleshooting and warranty information, please see the Other Useful Publications section in this manual.

The system is designed to operate correctly and safely when the requirements in this installation guide are met, in particular unintended or incorrect system operation could occur if requirements marked as a safety requirement are not complied with.

Transmissions installed at OEM facilities shall meet all requirements as identified in the Installation Guide TRIG2200 and be approved by Eaton Application Engineering. Contact your OEM Application Engineering department or Eaton Application Engineering for the proper Application Approval Form. All applications shall be submitted for approval.

Failure to adhere to installation requirements or any handling and installation requirements may affect transmission performance and/or warranty coverage.

Important Notice

Any reference to brand names in this publication is made as an example of the types of tools and materials recommended for use and should not be considered an endorsement. Equivalents may be used.

Every effort has been made to ensure the accuracy of the information contained in this manual. However, Eaton makes no warranty, either expressed or implied, based on the information provided and reserves the right to discontinue or modify models and/or procedures and to change specifications at any time without notice.

The vehicle OEM shall be responsible for producing parts that meet the requirements of this document.

© 2025 Eaton Corporation. All rights reserved

PTO Configuration and Location

The xEV HD4 Speed Transmission is equipped with an option for a rear-mounted PTO. Only use a PTO that has been specified for Eaton xEV Transmission.

NOTICE: Failure to use the correct PTO will result in transmission damage.

The lower countershaft, which provides drive to the PTO, rotates at 0.65 times the motor speed in the opposite direction and can deliver up to 700Nm of continuous torque at the PTO input.

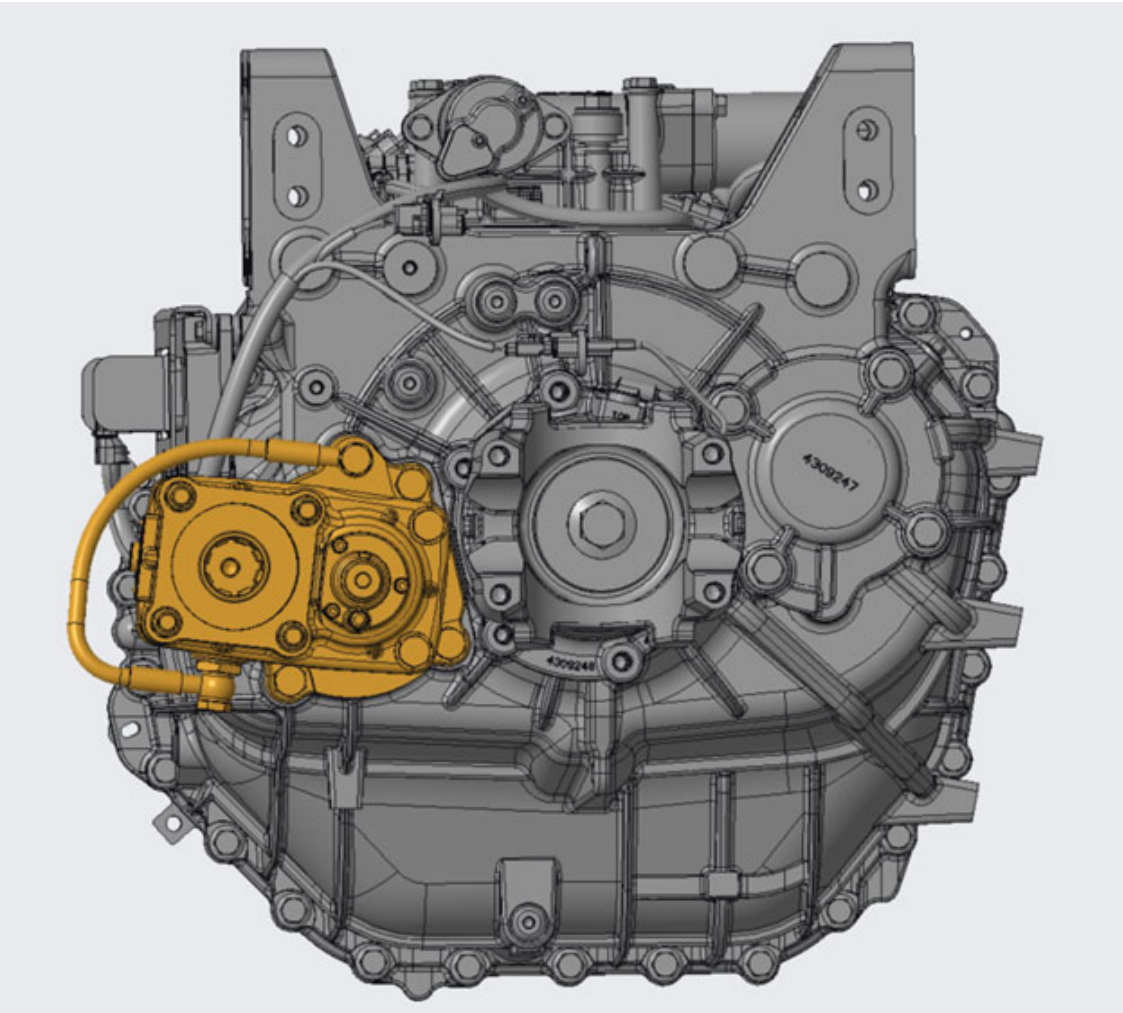

Figure 1 - xEV HD4 with Rear Mounted PTO

© 2025 Eaton Corporation. All rights reserved

PTO - Transmission Interface

PTO Mounting Bolt Pattern: 4 x M12 x 1.75, PCD 146 mm, max depth 25 mm

PTO Input Shaft Splines Requirement: 24 teeth external involute spline per ANSI B92.1 1976, 30° flat root side fit, 20/40 pitch, Class 5. Spline to be inspected using full form GO gauge to effective size. A NO-GO sector gauge or min size over pin to be used to control excessive tooth variation. Gauges are to be approved by Eaton.

The system integrator is responsible for the PTO interface design. PTO mounting face should incorporate a controlled squeeze elastomer seal and a lube channel feeding to the countershaft rear bearing. PTO should also maintain proper clearances to the countershaft and rear bearing. See below figures for reference.

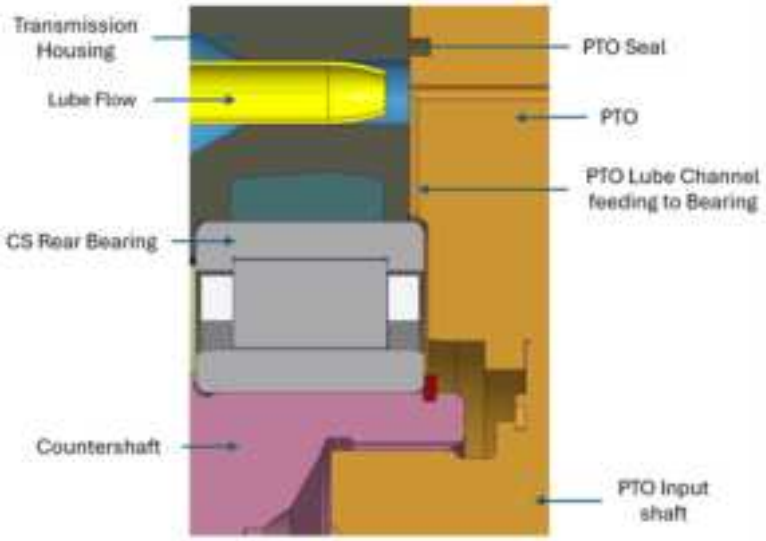

Figure 2 - Transmission Interface

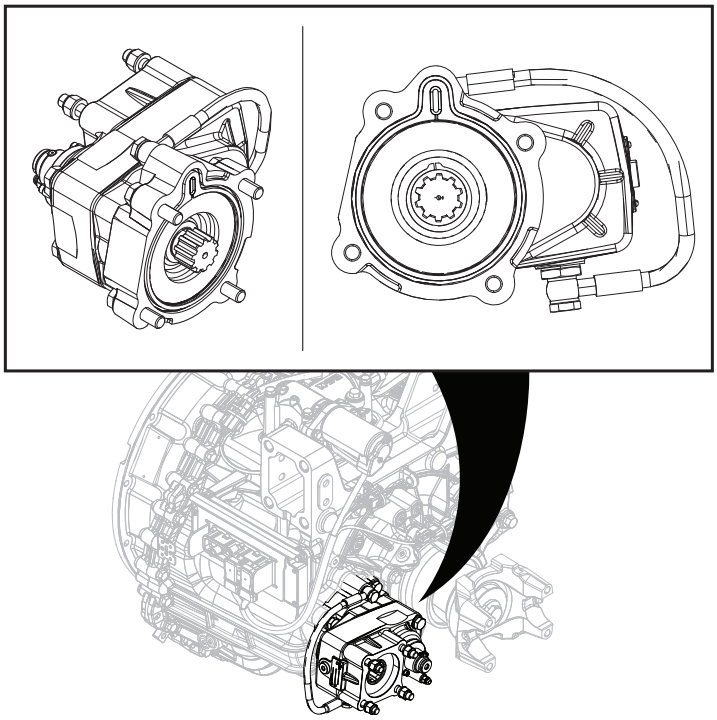

Figure 3 - PTO

© 2025 Eaton Corporation. All rights reserved

Below are Eaton's recommendations for the interface design. Eaton requests review of final design to verify variants meet these requirements.

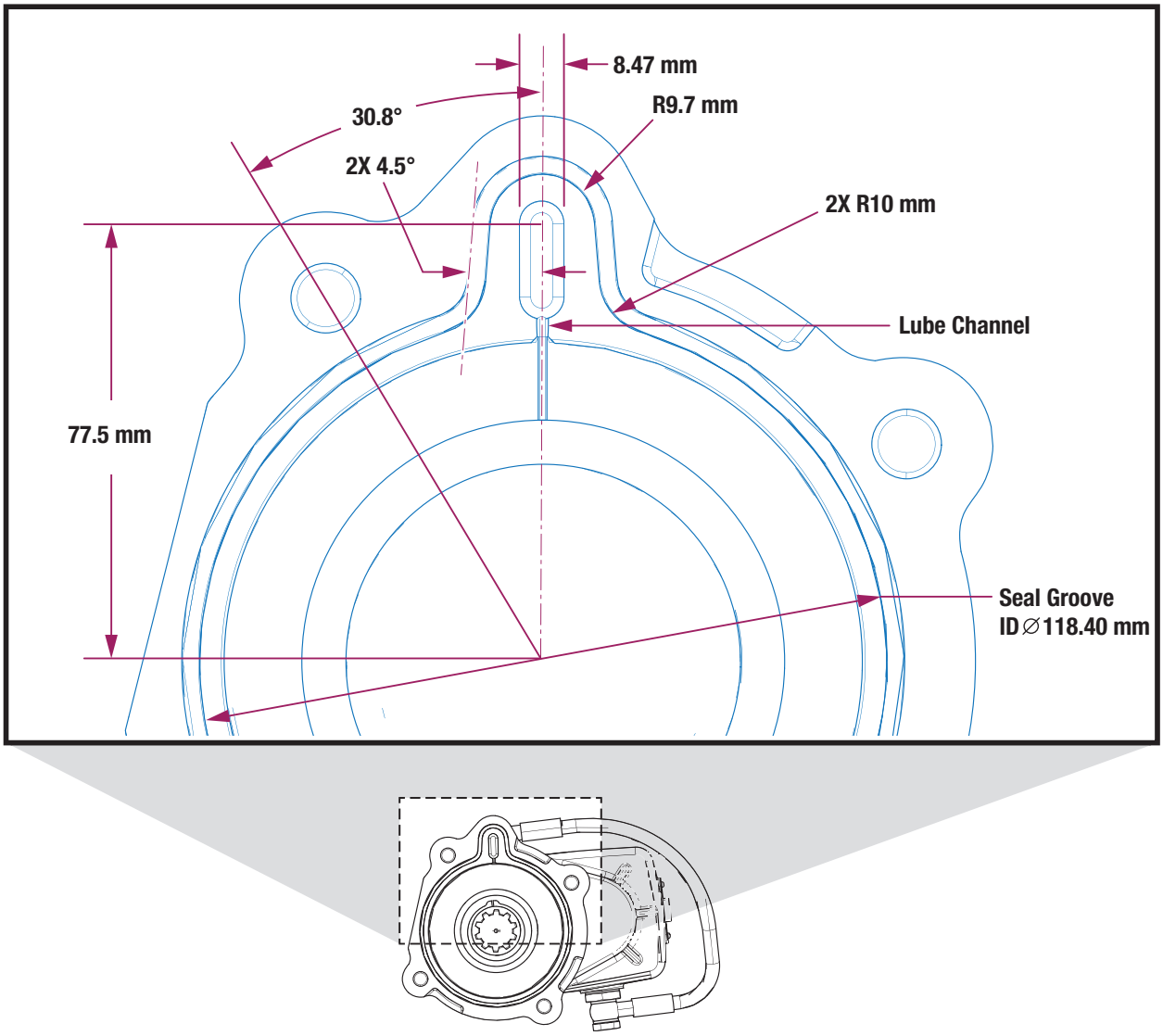

Figure 4 - PTO Measurements

© 2025 Eaton Corporation. All rights reserved

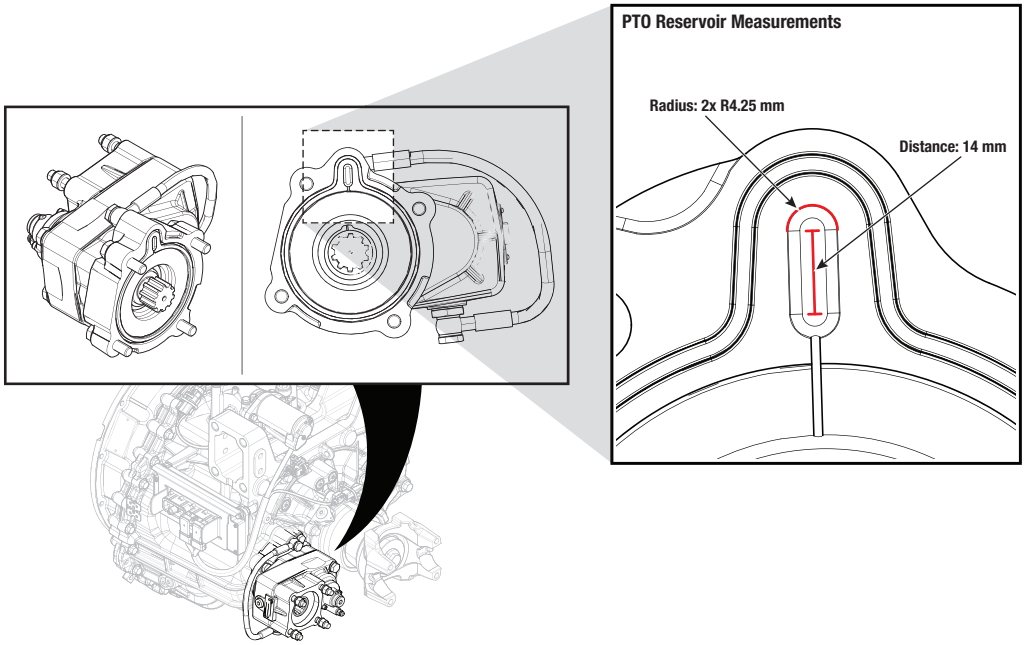

Figure 5 - PTO Reservoir Measurements

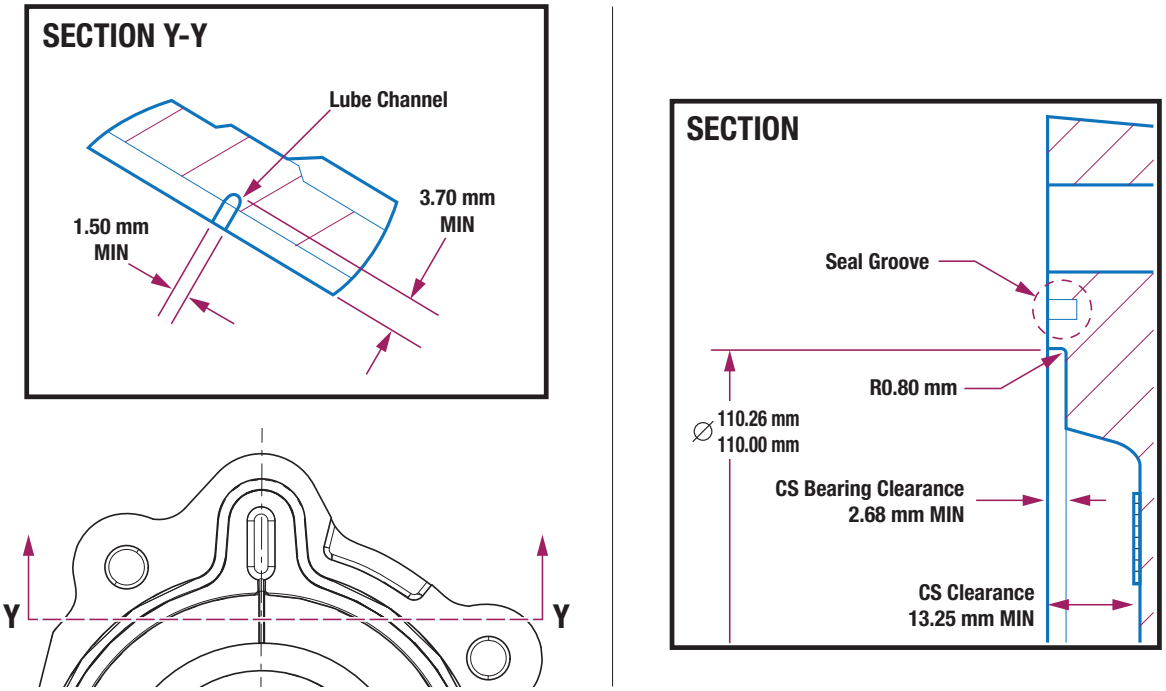

Figure 6 - Lube Channel Measurements

CAUTION: Failure to maintain proper interface design requirements could cause significant damage to transmission and external oil leak.

Reference “INSTALLATION DRAWING 5587306” (available upon request) for additional interface details.

© 2025 Eaton Corporation. All rights reserved

PTO Modes

PTO Operation Modes

There are two modes of PTO Operation.

Stationary:

In stationary PTO operation mode, the transmission remains in neutral and gear shifts are not allowed. This feature is set using ACN26 (PTO in Drive) = 0 (Disabled).

Mobile:

In mobile PTO operation mode, the transmission remains in neutral during the engagement of the PTO, mode and gear shifts are allowed. This feature is set using ACN26 (PTO in Drive) = 1 (Enabled).

PTO Control Modes

The xEV HD4 Speed Transmission has three available options of PTO Control. These control modes are dependent on type of vehicle architecture and are configured using ACN25 (Counter shaft PTO).

When value of ACN 25 (Counter shaft PTO) is set to zero (Disabled), the transmission control unit shall not follow the logic of PTO control.

When ACN25 (Counter shaft PTO) = 1, PTO is controlled by Transmission Controller (Analog).

When ACN25 (Counter shaft PTO) = 2, PTO is controlled by Body Controller.

When ACN25 (Counter shaft PTO) = 3, PTO is controlled by Transmission Controller using J1939 request from Body Controller.

© 2025 Eaton Corporation. All rights reserved

PTO Controlled by Transmission Controller (Analog)

The xEV HD4 Speed Transmission controller is responsible for PTO engagement and disengagement based on driver request for PTO engagement and internal conditions for engagement and disengagement.

The conditions protect from improper engagement/disengagement that can damage the PTO.

How this works:

- The transmission will receive a “PTO request” signal from the PTO switch requesting PTO engagement and the transmission will check if all of the conditions for engagement are satisfied.
- If conditions are acceptable to engage a PTO, the transmission will energize the PTO Solenoid and engage the PTO.
- When the PTO is engaged, the engagement switch located on the PTO sends a “PTO Engagement Feedback” signal back to the transmission confirming its engagement.

Note: Refer to an Eaton Engineer for engagement and disengagement conditions.

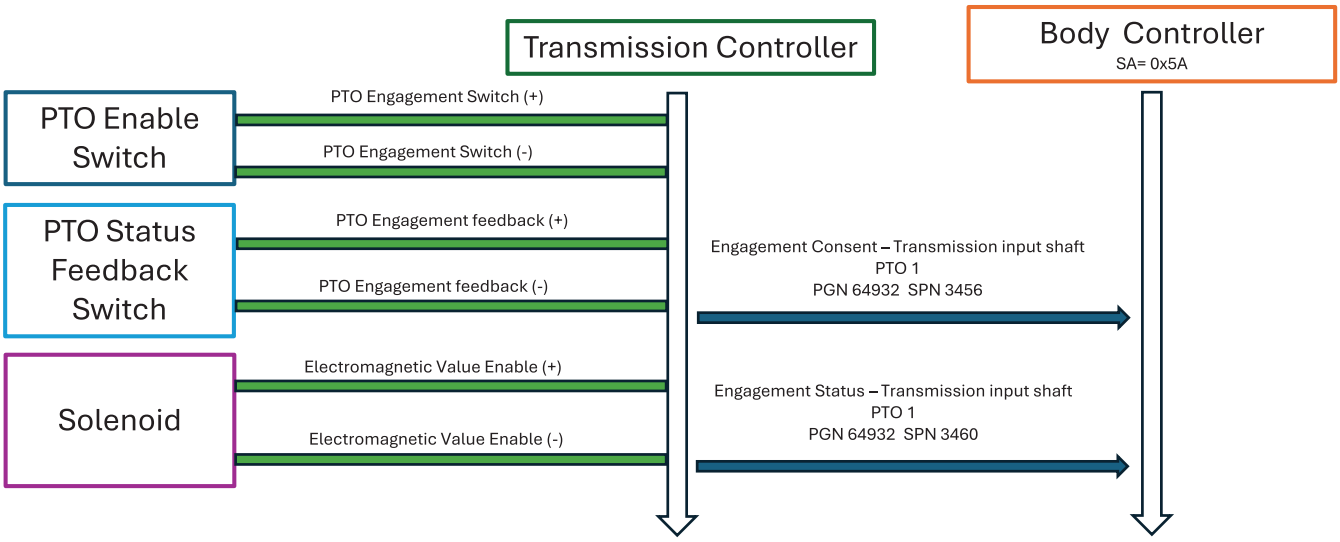

Figure 7 - PTO Controlled by Transmission Controller (Analog)

© 2025 Eaton Corporation. All rights reserved

PTO Controlled by Body Controller

The Body Controller is responsible for PTO engagement and disengagement based on driver request for PTO engagement and OEM conditions for engagement and disengagement.

The condition protects from improper engagement/disengagement that can damage the PTO.

The ACN 25 (Counter shaft PTO) value is set to 2 for this control mode of the PTO.

How this works:

- The body controller will receive a “PTO request” signal from the PTO switch requesting PTO engagement.
- The body controller will energize the “PTO control command” output to engage the PTO when the engagement conditions are met.
- When the PTO is engaged, the engagement switch located on the PTO sends a “PTO Status” signal back to the body controller confirming its engagement.
- The Body Controller broadcasts “Engagement Status - transmission Input Shaft PTO1, SPN 3460” for the transmission.

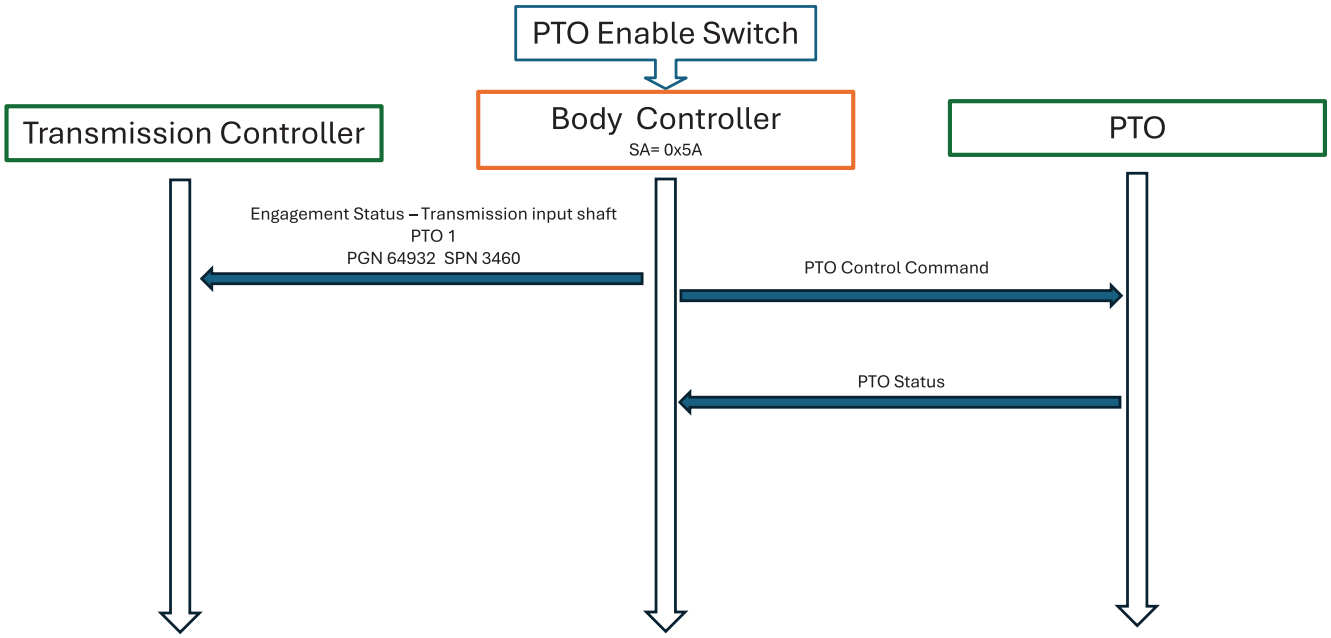

Figure 8 - PTO Controlled by Body Controller

© 2025 Eaton Corporation. All rights reserved

PTO Controlled by Transmission Controller Using J1939 Request from Body Controller

The xEV HD4 Speed Transmission controller is responsible for PTO engagement and disengagement based on driver request, PTO Enable Switch, sent to the Body Controller.

The ACN 25 (Counter shaft PTO) value is set to 3 for this control mode of the PTO.

How this works:

- The body controller will receive a “PTO request” signal from the PTO switch requesting PTO engagement.
- The body controller will send the “PTODE SPN 3452 Enable Switch - Transmission Input Shaft PTO 1” to the transmission controller.
  - 00b = Enable switch off - PTO operation not desired
  - 01b = Enable switch on - PTO operation desired
  - 10b = Error
  - 11b = Not available
- The transmission continually monitors the conditions it requires before its PTO drive can be engaged. Regardless of whether the operator has requested PTO engagement, the “engagement consent” status is continually broadcast by the transmission. “PTODE SPN 3456 Engagement Consent - Transmission Input Shaft PTO1” to the Body controller based on the engagement conditions.
  - 00b = Consent not given - PTO drive should not be engaged
  - 01b = Consent given - PTO drive may be engaged
  - 10b = Error
  - 11b = Not available
- If conditions are acceptable, the transmission controller will energize the “Electro magnetic value enable” output to the solenoid to engage the PTO when the engagement conditions are met.
- When the PTO is engaged, the engagement switch located on the PTO sends a “PTO Engagement feedback” signal back to the transmission controller confirming its engagement.
- The Transmission Controller broadcasts “PTODE SPN 3460 Engagement Status - Transmission Input Shaft PTO1, SPN 3460” for the transmission.
  - 00b = PTO is not engaged
  - 01b = PTO is engaged
  - 10b = Error
  - 11b = Not available

© 2025 Eaton Corporation. All rights reserved

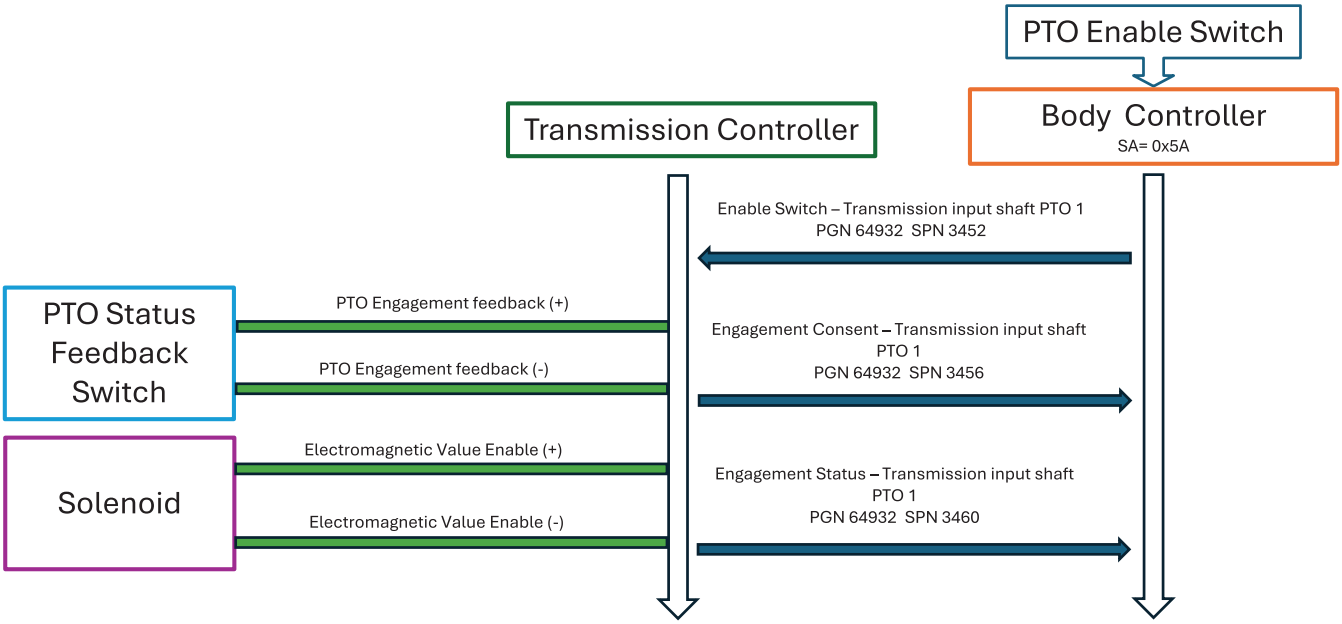

Figure 9 - PTO Controlled by Transmission Controller using J1939 request from Body Controller

© 2025 Eaton Corporation. All rights reserved

PTODE Message Parameters:

The following SAE J1939 PTODE message parameters are used.

- SPN 3452 - Enable Switch - Transmission Input Shaft PTO 1
- SPN 3456 - PTO 1 Engage (Transmission Consent)
- SPN 3460 - PTO 1 Confirm (Engagement Status)

Note: Each device on the J1939 data link broadcasting the PTODE message shall only populate valid data (00 or 01) for the parameters it is controlling. All other parameters shall be sent as “Not Available”.

Source Addresses:

The source address of the transmission on the J1939 data link is (03). The xEV HD4 Speed transmission will accept PTODE control messages from the following source addresses by default:

- Body Controller - Source Address (5A or 00)
- Vehicle Management Computer - Source Address (39/27h)
- Cab Controller Primary - Source Address (49/31h)

© 2025 Eaton Corporation. All rights reserved

PTO Wiring

The xEV HD4 Speed Transmission supports the use of dedicated inputs and outputs which can be wired directly to the transmission for PTO Control. Hardware I/O is identical for both Analog control and PTO Control by Transmission controller- using J1939 request from body controller, the only difference being that the PTO Enable Switch sends the request to the body controller instead of the transmission controller.

Hardwired I/O Control Logic:

- PTO Engagement Switch - Input to Transmission to request PTO operation.
- Electromagnetic Value Enable - Output from Transmission to enable PTO engagement.
- PTO Engagement Feedback - Input to Transmission to confirm PTO is engaged.

Pin Arrangement (Vehicle Side):

- PIN 19 (PTO engagement switch+) and PIN 33 (PTO engagement switch-) are connected with the ends of PTO enable switch (Normally open)
- PIN 18 (PTO engagement feedback +) and PIN 34 (PTO engagement feedback -) are connected with the ends of PTO status feedback switch (Normally open) via connector
- PIN 21 (Electromagnetic value enable -) and PIN 22 (Electromagnetic value enable +) are connected with the ends of solenoid valve (Normally closed)

Troubleshooting PTO Operation

Please refer to the xEV HD4 Speed Transmission troubleshooting manual for any faults raised by PTO to find the effective way to resolve them.

© 2025 Eaton Corporation. All rights reserved

PTO Operation

PTOs can be operated with the vehicle parked in neutral, or while moving the vehicle in a non-neutral mode.

PTO Operation while parked in Neutral

To engage a PTO:

1. Ensure the vehicle is at a complete stop.
2. Select Neutral (N) mode using the transmission driver interface device.
3. Set the vehicle parking brake and release the service brake.
4. Toggle the PTO switch to On to start PTO operation.

To disengage the PTO:

1. Toggle the PTO switch to Off.

Note: When the vehicle is stationary in neutral with the parking brakes set, the PTO can be switched on and off from within the cab or from a remote location outside of the cab.

PTO Operation while moving in Drive or Reverse

To engage a PTO:

1. Ensure the vehicle is at a complete stop.
2. Select Neutral (N) mode using the transmission driver interface device.
3. Set the vehicle parking brake and release the service brake.
4. Toggle the PTO switch to On to start PTO operation.
5. Select desired driving mode (RDML).
6. Release the service brake to start driving, PTO operation will resume once the vehicle is in motion.

To disengage the PTO:

1. Ensure the vehicle is at a complete stop.
2. Select Neutral (N) mode using the transmission driver interface device.
3. Toggle the PTO switch to Off.

Note: PTO cannot be disengaged while the vehicle is in motion.

© 2025 Eaton Corporation. All rights reserved

PTO Configurable Options

The xEV HD4 Speed Transmission provides configurable options that can be enabled/disabled using ServiceRanger. Some options are restricted to certain models. Below is a brief description of each of these options.

PTO Engaged Shifting

By default, transmission will not allow the transmission to be shifted out of the start gear when the PTO is engaged. The PTO Engaged Shifting option will allow the transmission to shift to all 4 gears Manual and Drive modes, only 1st gear is available in reverse mode. This option is enabled when ACN 26 (PTO in Drive) is set to 1.

Maximum Motor Speed and Vehicle Speed

The xEV HD4 Speed Transmission does not offer options to limit motor speed or vehicle speed when the PTO is engaged. Consult the OEM on how to configure to limit motor speed and/or vehicle speed whenever the PTO is engaged.

© 2025 Eaton Corporation. All rights reserved

38-Pin Vehicle Harness Connector

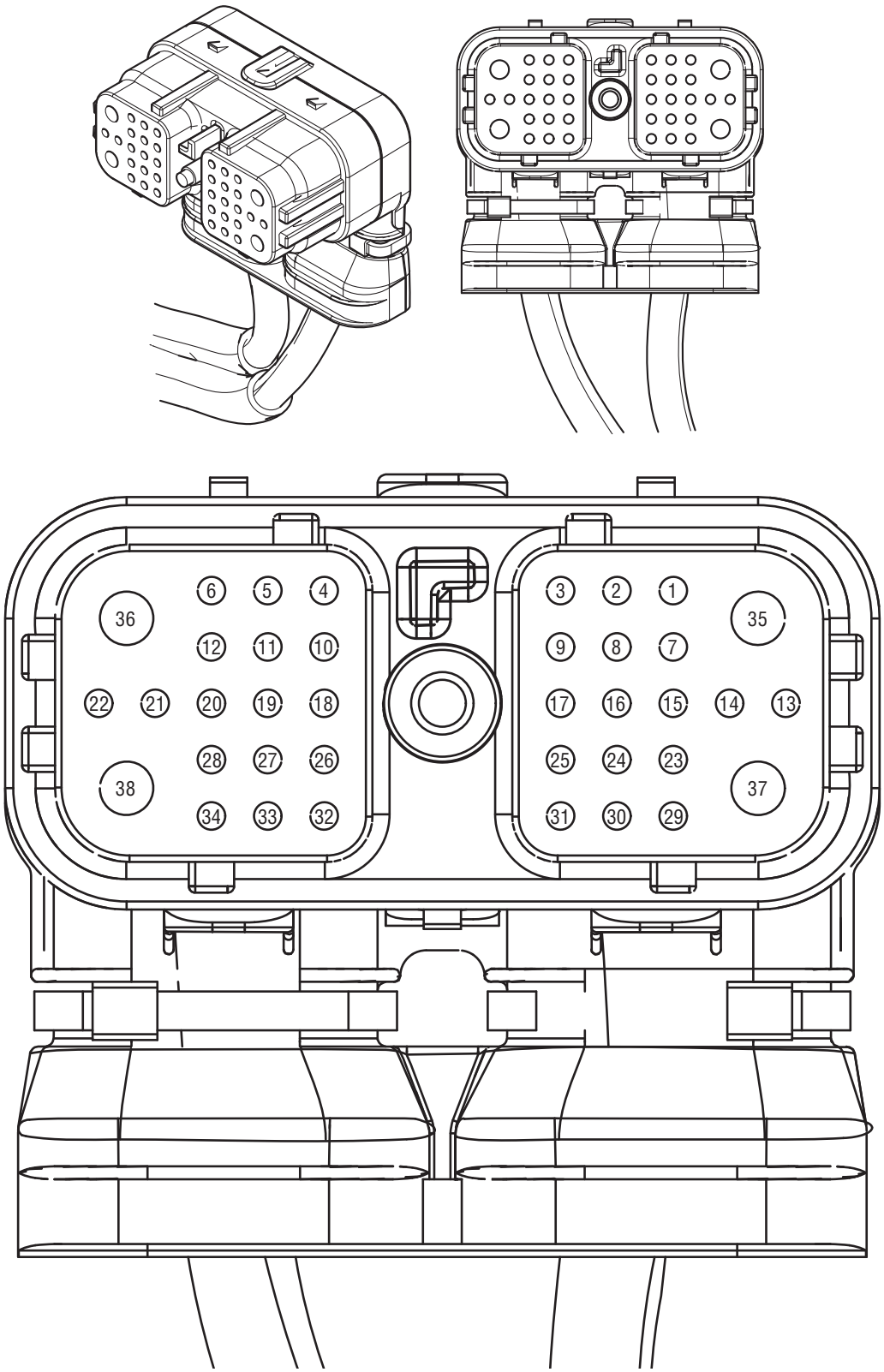

Figure 10 - 38-Way Connector

© 2025 Eaton Corporation. All rights reserved

38-Way Pin	Description	Wire
1	Not Ussed	Plug
2	J1939 Low (-)	18 TXL
3	J1939 High (+)	18 TXL
4	Not Used	Plug
5	Not Used	Plug
6	Not Used	Plug
7	Not Used	Plug
8	Not Used	Plug
9	Not Used	Plug
10	Not Used	Plug
11	Not Used	Plug
12	Not Used	Plug
13	Not Used	Plug
14	Shift Control Input Common 2 (-)	18 TXL
15	Shift Control Input Auto Mode Signal (+)	18 TXL
16	Shift Control Input Manual Mode Signal (+)	18 TXL
17	Shift Control Input Common 1 (-)	18 TXL
18	PTO Engagement Feedback (+)	18 TXL
19	PTO Engagement Switch (+)	18 TXL

38-Way	Description	Wire
20	Not Used	Plug
21	Electromagnetic Value Enable (-)	18 TXL
22	Electromagnetic Value Enable (+)	18 TXL
23	Service Light Supply	18 TXL
24	Not Used	Plug
25	Shift Control Protected Battery Negative (-)	18 TXL
26	Not Used	Plug
27	HIL Low (-)	18 TXL
28	HIL High (+)	18 TXL
29	Not Used	Plug
30	Not Used	Plug
31	Shift Control Protected Battery Positive (+)	18 TXL
32	Not Used	Plug
33	PTO Engagement Switch (-)	18 TXL
34	PTO Engagement Feedback (-)	18 TXL
35	Ignition	12 GXL or 14SXL
36	Battery Negative (-)	12 GXL
37	Not Used	Plug
38	Battery Positive (+)	12 GXL

© 2025 Eaton Corporation. All rights reserved

Transmission Lubrication

Note: The transmission lubricant shall be approved per Eaton PS-386 requirements as documented in the Lubrication Manual TCMT0020.

A list of approved lubricants and suppliers can be found in the Approved Lubricant Supplier Manual TCMT0020. Not using the required lubricant will result in degraded performance and shortened life of the product.

- Additives and/or friction modifiers are not approved. Additives of any kind will result in unpredictable consequences. No liability of any kind will be accepted by Eaton for any damage resulting from the use of such additives.
- Failure to use the required lubricant will affect the transmission performance and the warranty coverage.
- All approved lubricants are required to display the PS-386 approved logo.

Figure 11 - Eaton Approved Lubricant Label

© 2025 Eaton Corporation. All rights reserved

Lubrication Fill Procedure with PTO Installed

xEV HD 4spd transmissions shall be filled with lubrication using a fill hole located at the top rear of the transmission rear case.

- Ensure transmission is level to ground
- Remove fill plug from top rear of transmission rear case.
- Follow established transmission lubrication fill process for selecting and dispensing lubrication. Ensure 7 liters of lubricant has been dispensed.
- Reinstall fill location plug and torque plug to 18 – 22 lb. ft. (24.5 – 29.5 Nm).
- With the PTO engaged, spin the transmission at 1000 RPM in 4th gear for 5 minutes
- Remove level check plug and verify oil level. If needed, pour additional oil through fill hole until oil level reaches level hole. Re-install both level plug and fill plug and torque to 18-22 lb ft (24.5 - 29.5 Nm).
- Clean any lubrication residue from around the fill plug.

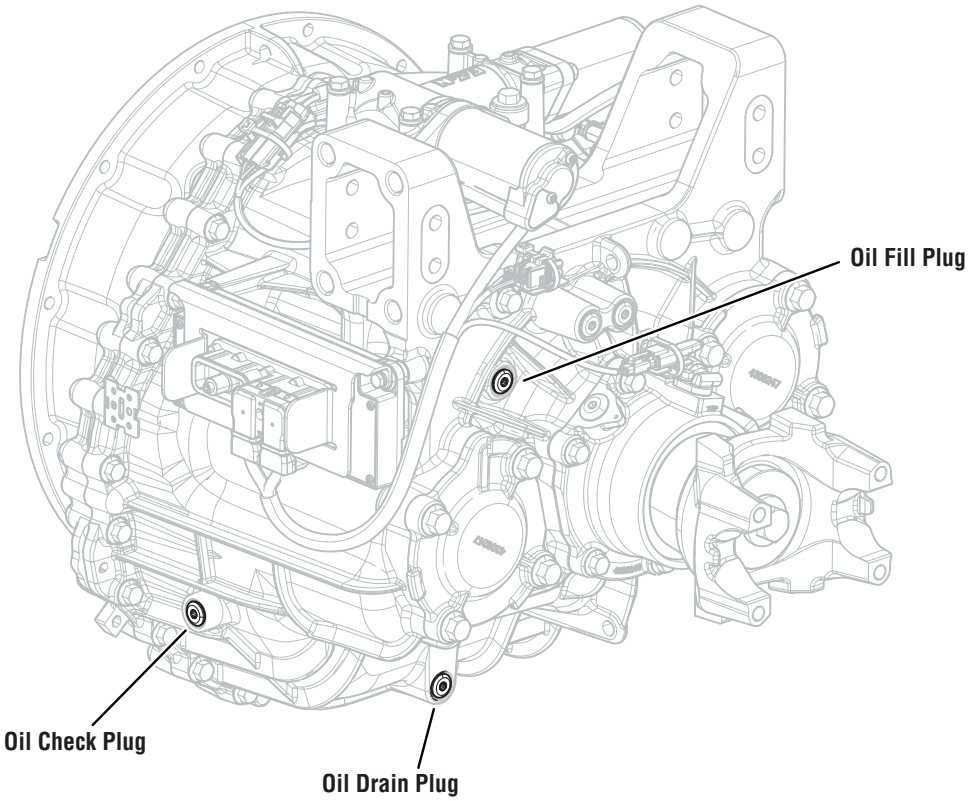

Figure 12 - Oil Plug Locations

© 2025 Eaton Corporation. All rights reserved

Change Control Log

Last Revised Date	Description of Clarifications and Updates
August 2025	Document created.

© 2025 Eaton Corporation. All rights reserved

Copyright Eaton Corporation, 2025. Eaton Corporation hereby grant their customers, vendors, or distributors permission to freely copy, reproduce and/or distribute this document in printed format. It may be copied only in its entirety without any changes or modifications. THIS INFORMATION IS NOT INTENDED FOR SALE OR RESALE, AND THIS NOTICE MUST REMAIN ON ALL COPIES.

Note: Features and specifications listed in this document are subject to change without notice and represent the maximum capabilities of the software and products with all options installed. Although every attempt has been made to ensure the accuracy of information contained within, Eaton makes no representation about the completeness, correctness or accuracy and assumes no responsibility for any errors or omissions. Features and functionality may vary depending on selected options.

For spec'ing or service assistance, call 1-800-826-HELP (4357) or visit www.eaton.com/roadranger. In Mexico, call 001-800-826-4357.

Roadranger: Eaton and trusted partners providing the best products and services in the industry, ensuring more time on the road.

Eaton Corporation
26201 Northwestern Hwy,
Southfield, MI 48076 USA
800-826-HELP (4357)
www.eaton.com/roadranger

Printed in USA

Powering Business Worldwide

BACKED BY
Roadranger
SUPPORT