PYLE

DESIGNED IN THE USA

Visit Our Website

SCAN ME

PyleUSA.com

USER GUIDE

PLUTV53BTA - PLUTV53BTA.5

5.25'' Waterproof Rated Off-Road Wireless BT Speakers

Get Into It!

Features:

- Pro Audio PowerSport Speakers
- Amplified (Active) Speaker System
- Bluetooth Wireless Music Streaming
- Bridged Sound System: (2) x 5.25" Woofers + (2) x 1" Tweeters
- Marine-Grade Waterproof Construction
- Weatherproof & Water-Resistant Housing
- 2-Way Full-Range Stereo Sound Reproduction
- Built-in Digital Sound Processing Amplifier
- Integrated Speaker Power & Wiring Harness
- Compact Size with High-Powered Output
- Impressive Bass Response
- 3.5mm Aux Input Jack
- Connect & Stream Audio from External Devices
- Sleek Design, Machine-Molded Speaker Cabinet Housing
- Rugged, Universal Mounting Bracket Design for Roll Bar / Roll Cage
- Designed for Off-Road Outdoor Vehicles: ATV, UTV, 4x4, Jeeps, Marine Watercraft

Bluetooth Connectivity:

- Simple & Hassle-Free Pairing
- Instant Wireless Audio Streaming
- Compatible with All Modern Devices (Smartphones, Tablets, Laptops, etc.)
- Bluetooth Version: V5.0
- Bluetooth Network Name: 'PyleUSA'
- Wireless Range: 30+ ft.
- Bluetooth Receiver Module is Built Into the Amplifier of the Main/Active Speaker

California Prop 65 Warning

⚠**WARNING:**

This product contains Di (2-ethylhexyl) phthalate (DEHP) which is known to the state of California to cause cancer birth defects and other reproductive harm. Do not ingest.

For more info go to: www.P65warnings.ca.gov

What's in the Box:

- (2) 5.25'' Amplified Main Speakers
- 6.5 ft. Speaker Connection Wires
- (2) Butt Connectors (16–22 AWG)
- (2) 1.75'' Aluminum Mounting Brackets
- (2) 2'' Aluminum Mounting Brackets
- (2) Rubber Pads: 6.5'' x 0.95'' x 0.67''
- (2) Rubber Pads: 5.7'' x 0.95'' x 0.67''
- (2) 6x50mm Hexagon Socket Head Cap Screws
- (2) Stainless Steel Nuts

Technical Specs:

- Speaker Power: 1000 Watts MAX
- Amp Power: 2 x 250 Watts MAX @ 4 Ohms (2 x 125 Watts RMS)
- Amp Type: 2-Channel, Class D
- Marine Grade Waterproof Rating: IP-X45
- Speaker Type: Polypropylene Cone, Butyl Rubber Surround (x2)
- Tweeter Type: Neodymium Dome (x2)
- Impedance: 4 Ohm
- Magnet Type: 24 oz. Circuit
- Mid-Woofer Voice Coil: 1'', Aluminum
- Sensitivity: 88 dB ± 2 dB @ 1M/1W
- Anti-Thump Turn-On
- Soft Turn On/Off
- Total Harmonic Distortion (T.H.D.): <0.05%
- Signal-to-Noise Ratio (S/N): >80 dB
- Channel Separation: >65 dB
- Amp Frequency Response: 20 Hz – 20 kHz
- Fuse: 1 x 15A
- Power Supply: DC 12V
- Universal Mounting Bracket Diameter (Roll Bar/Roll Cage): 1.75'' ~ 2.0''
- Speaker Dimensions (with Bracket, each): 6.5'' x 7.1'' x 9.5''

Installation

1. To avoid potential shorts in the electrical system, disconnect the (-) battery cable before installation. Use this unit only with a 12-volt battery and negative ground. Failure to do so may result in fire or malfunction.

2. **Suggested Speaker Mounting:**

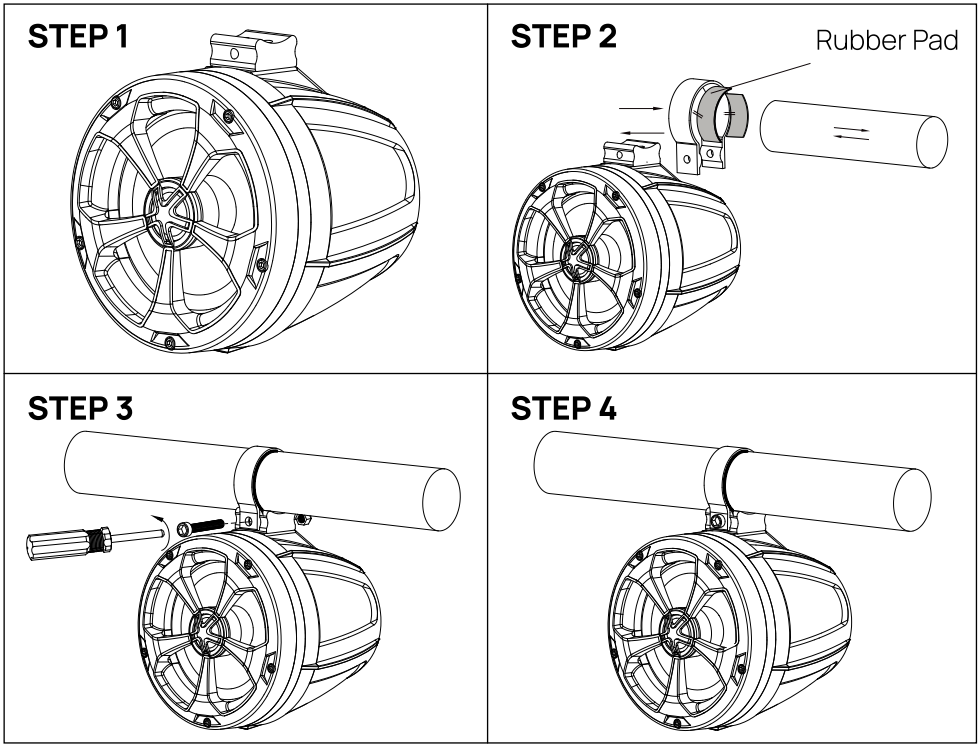

Step 1: Place the speaker in a secure location.

Step 2: Slide the buckle with the rubber pad attached onto the speaker's bracket stand. Attach the assembly to the vehicle or watercraft handlebar.

Step 3/4: Secure the buckle using the provided screw.

Step 5: Use the included butt connectors to connect the speaker wires. (See Illustration 1)

Step 6: Use the included butt connectors to connect the power cable. (See Illustration 2)

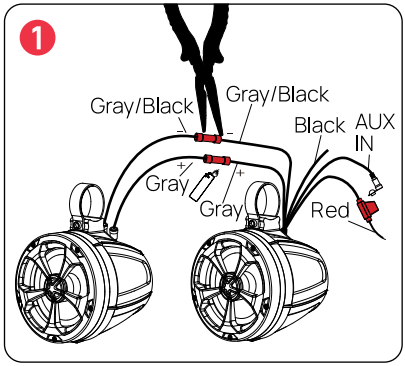

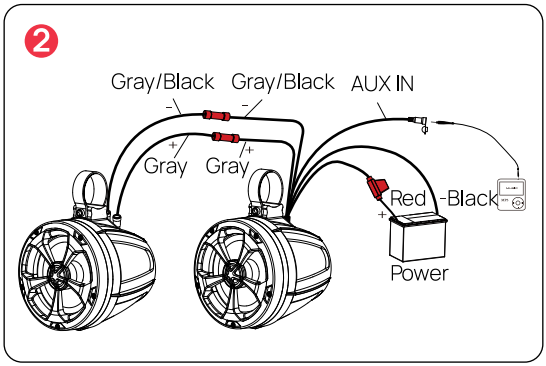

Cleaning, Maintenance, and Storage

Cleaning:

- Turn off and unplug the speakers before cleaning.
- Wipe the outside with a soft, damp cloth.
- Do not use harsh cleaners or spray water directly on the speakers.

Maintenance:

- Check the brackets and screws to make sure they are tight.
- Look at the wires for any damage. Replace if needed.
- Keep the speaker surface free from dust and dirt.

Storage:

- Unplug and remove the speakers if not used for a long time.
- Store in a cool, dry place away from direct sunlight.
- Keep covered to protect from dust and damage.

Register Product

Thank you for choosing PyleUSA. By registering your product, you ensure that you receive the full benefits of our exclusive warranty and personalized customer support.
Complete the form to access expert support and to keep your PyleUSA purchase in perfect condition.

Start Here

Model Number:
PLUTV53BTA

PyleUSA.com/pages/register

PYLE

Get Into It!

Questions? Comments?
We are here to help!
Phone: (1) 718-535-1800
PyleUSA.com/ContactUs

Get Into It!