MGC

RA-1000 Series

Remote Multiplex Annunciator Panels

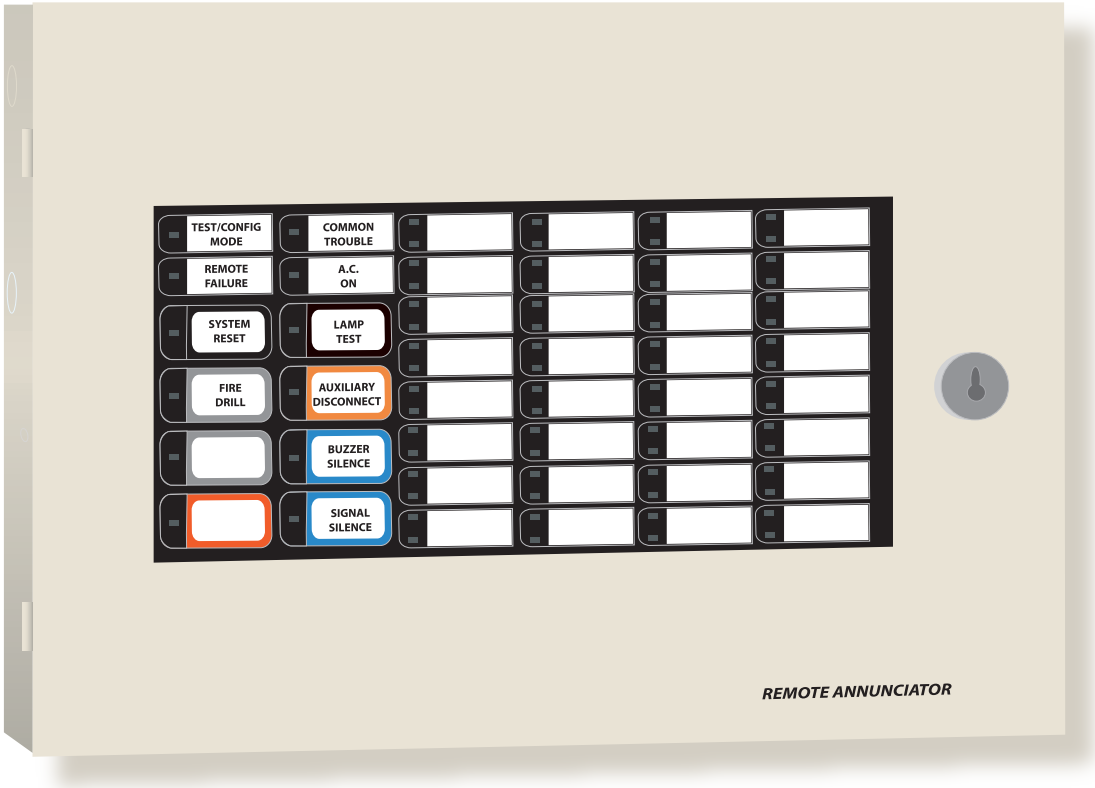

Installation and Wiring Manual

LT-617 Rev. 19
April 2018

firealarmresources.com

firealarmresources.com

Table of Contents

1.0 Introduction 1

2.0 Mechanical Installation 2

3.0 Wiring Instructions 3

3.1 RS-485 WIRING 3
3.2 24V DC POWER WIRING 3

4.0 DIP Switch Settings 4

4.1 The DIP switches (located on the main) are set as: 4
4.2 For FA-1000, FA-300 and MR-2300 Series Panels 4
4.3 For FX-2000 Panels 5
4.4 For FleX-Net™ and MMX™ Panels 5
4.5 For FX-3500, FX-3500RCU, FX-3318, FX-350, FA-300, FR-320, MR-3500, MR-3500RCU, and MR-2350 Panels 6
4.6 The RAX-1048TZDS Adder Annunciator Chassis 6
4.7 The RAM-1032TZDS Main Annunciator Chassis 6
4.8 The RAM-1016TZDS Main Annunciator Chassis 6

5.0 Specifications and Features 7

5.1 Enclosures 7
5.2 Annunciators 7
5.2.1 RAM-1016TZDS Main Annunciator Chassis 7
5.2.2 RAM-1032TZDS Main Annunciator Chassis 7
5.2.3 RAX-1048TZDS Adder Annunciator Chassis 8
5.3 Current Drain for Battery Calculations 8
5.4 Environmental Specifications 8

firealarmresources.com

firealarmresources.com

1.0 Introduction

MGC's modular design RA-1000 Series Remote Multiplex Annunciator panels provide a large capacity of annunciation with MGC's Analog and Network Fire Alarm Control Panels. Tables below describe the different main annunciator and adder chassis models. Each circuit indicator is a bi-colour LED that is automatically configured to match the fire alarm control panel configuration.

Table 1 Annunciator Chassis Descriptions

Annunciator Model Number	Description
RAM-1016TZDS	16-circuit main annunciator chassis with 16 added zoned trouble LEDs
RAM-1032TZDS	32-circuit main annunciator chassis with 32 added zoned trouble LEDs that may be expanded with up to four RAX-1048TZDS adder annunciator chassis to a maximum of 208 circuit display points
RAX-1048TZDS	48-circuit adder annunciator chassis with 48 added zoned trouble LEDs

firealarmresources.com

2.0 Mechanical Installation

There are five sizes of enclosures available, see Table 2 below:

Table 2 Enclosure Dimensions and Capacity

Enclosure Model Number	Height H(in.)	Width (in.)	Mounting A (in.)	Mounting B (in.)	Annunciator Capacity
BB-1001D/R (MMX-BB-1001D/R)	9.0”	12.75”	9.95”	7.5”	1
BB-1002D/R (MMX-BB-1002D/R)	18.0”	12.75”	9.95”	16.5”	2
BB-1003D/R (MMX-BB-1003D/R)	26.5”	12.75”	9.95”	24.9”	3
BB-1008D/R (MMX-BB-1008D/R)	33.0”	22.5”	20.9”	35.2”	8
BB-1012D/R (MMX-BB-1012D/R)	45.0”	22.5”	20.9”	52.0”	12

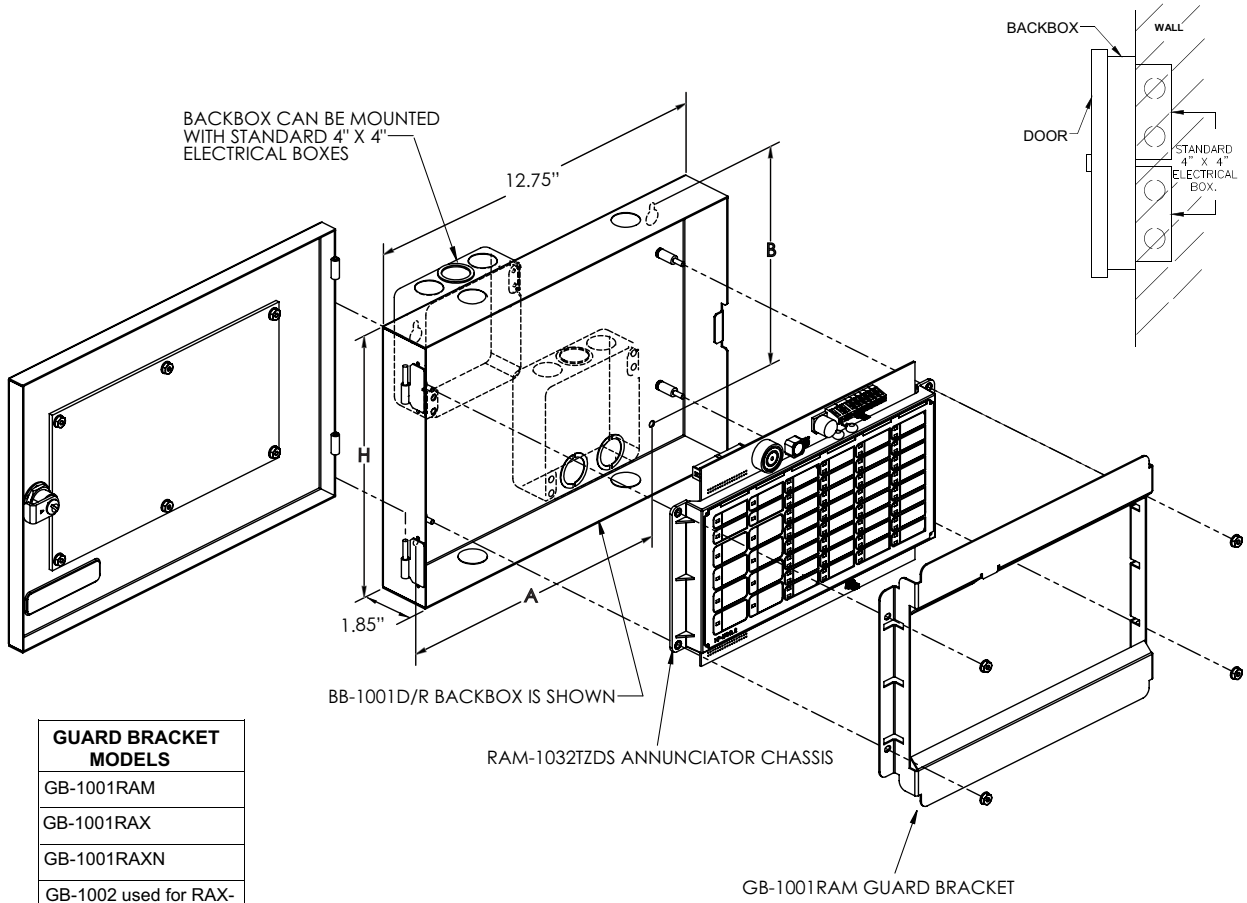

GUARD BRACKET MODELS
GB-1001RAM
GB-1001RAX
GB-1001RAXN
GB-1002 used for RAX-1048TZDS

Figure 1 Mechanical Assembly Diagram

Notes: The RAM-1032TZDS and the RAM-1016TZDS are supplied with the NP-680 laser printable label sheet. Column 1A or 1B (English or French) is selected for either a 2-stage or 1-stage system and the blank labels are used to print zone information. The RAX-1048TZDS is supplied with the NP-681 blank laser printable label sheet.

The RA-1000 series of annunciators RAM-1016TZDS, RAM-1032TZDS, and RAX-1048TZDS display Initiating Circuit Status and individual circuit trouble indication. Indicating and Relay Circuits are not remotely displayed. For more details, see the Fire Alarm Control Panel manual.

firealarmresources.com

3.0 Wiring Instructions

3.1 RS-485 WIRING

The RS-485 wiring to the RAM-1016TZDS and RAM-1032TZDS Module is recommended to be twisted shielded pair as shown in Figure 2. The wire gauge may be:

- 22 AWG up to 2000 ft.
- 20 AWG up to 4000 ft.

Figure 2 Wiring Diagram

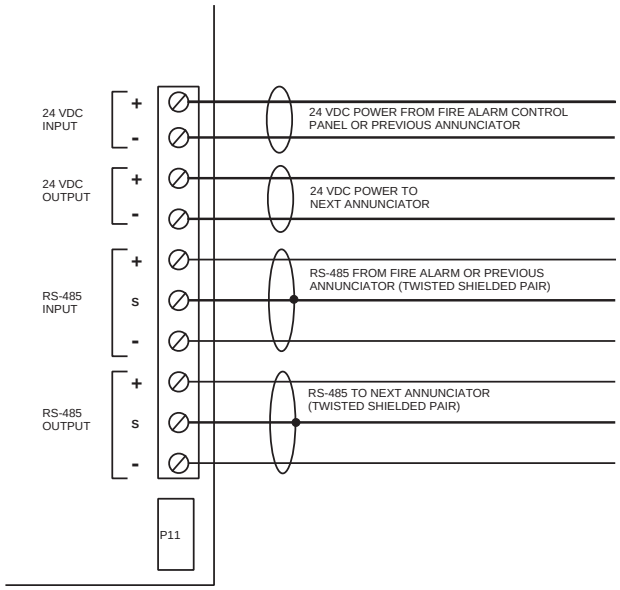

3.2 24V DC POWER WIRING

The RS-485 wiring from the fire alarm control panel to the annunciator(s) must be point-to-point from the fire alarm panel to the first annunciator, then to the next annunciator, and so on. No star wiring or T-tapping is allowed. Each RAM-1016TZDS and RAM-1032TZDS Main Annunciator Module has a 120 ohm end-of-line resistor on its RS-485 output terminals. This is removed on all except the last wired module.

The 24 VDC field wiring needs to be of an appropriate gauge for the number of annunciators and the total wiring run length. Use the Current Drain for Battery Calculations on page 8 to calculate the maximum current for all annunciators summed together.

Note: All circuits are power limited and must use type FPL, FPLR, or FPLP power limited cable.

Attention: Accidentally connecting any of the 24 VDC wires to the RS-485 wiring will result in damage to the annunciator and/or to the fire alarm control panel to which it is connected.

Table 3 Wiring Table for Power to Annunciator

Total Maximum Current for all Annunciators	Maximum Wiring Run to Last Annunciator								Max Loop Resistance
	18AWG		16AWG		14AWG		12AWG		
Amperes	ft	m	ft	m	ft	m	ft	m	Ohms
0.06	2350	716	3750	1143	6000	1829	8500	2591	30
0.12	1180	360	1850	567	3000	915	4250	1296	15
0.30	470	143	750	229	1200	366	1900	579	6
0.60	235	71	375	114	600	183	850	259	3
0.90	156	47	250	76	400	122	570	174	2
1.20	118	36	185	56	300	91	425	129	1.5
1.50	94	29	150	46	240	73	343	105	1.2
1.70	78	24	125	38	200	61	285	87	1.0

firealarmresources.com

4.0 DIP Switch Settings

Each annunciator assembly (main and adder chassis) needs to be assigned a unique, sequential “Address” via the main annunciator DIP Switch SW1. DIP Switch SW2 is used for disabling of some Front Panel (located on the main annunciator chassis) push buttons (when individual switches are “ON” then the corresponding push button is disabled).

4.1 The DIP switches (located on the main) are set as:

DIP SWITCH SW1			DIP SWITCH SW2		
SW1-1	=	Address A0	SW2-1	=	Disable System Reset button
SW1-2	=	Address A1	SW2-2	=	Disable Fire Drill button
SW1-3	=	Address A2	SW2-3	=	Disable Acknowledge button
SW1-4	=	Address A3	SW2-4	=	Disable General Alarm button
SW1-5	=	Must be set to “OFF” for all panels except the FX-2000 (see Table 5).	SW2-5	=	Not Used
SW1-6	=	Not Used	SW2-6	=	Disable Auxiliary Disconnect button
SW1-7	=	Not Used	SW2-7	=	Not Used
SW1-8	=	Checksum Select	SW2-8	=	Disable Signal Silence button

Checksum Select:

ON when used with fire alarm panels FleX-Net™, MMX™, FX-2000 version 2.X.X and higher, FX-350, MR-2350, FX-3500, FX-3500RCU, FX-3318, MR-3500, MR-3500RCU (16 bit checksum).

OFF when used with fire alarm panels FA-1000, FA-300, and MR-2300 (8 bit checksum).

4.2 For FA-1000, FA-300 and MR-2300 Series Panels

Set the main annunciator “Address” (see the manual for the fire alarm control panel being used for the maximum number of annunciator addresses allowed), as shown in the following table:

Table 4 Annunciator Addresses

DIP Switch Positions	Annunciator Address							
	1	2	3	4	5	6	7	8
SW1-1 (A0)	ON	OFF	ON	OFF	ON	OFF	ON	OFF
SW1-2 (A1)	OFF	ON	ON	OFF	OFF	ON	ON	OFF
SW1-3 (A2)	OFF	OFF	OFF	ON	ON	ON	ON	OFF
SW1-4 (A3)	OFF	OFF	OFF	OFF	OFF	OFF	OFF	ON

Note: Annunciators on a common RS-485 connection must be numbered sequentially; i.e.: 1,2,3,4, and not randomly such as 5,3,8,14! Note that NOT ALL annunciator “Addresses” are valid for all Fire Alarm Control Panels. Refer to the Fire Alarm Control Panel Manual for further information

firealarmresources.com

4.3 For FX-2000 Panels

Set the annunciator “Address” (see the manual for the fire alarm control panel being used), as follows in the following table:

Table 5 Annunciator Address Settings

Address	SW1-1	SW1-2	SW1-3	SW1-4	SW1-5	Address	SW1-1	SW1-2	SW1-3	SW1-4	SW1-5
33	ON	OFF	OFF	OFF	OFF	**48**	OFF	OFF	OFF	OFF	ON
34	OFF	ON	OFF	OFF	OFF	**49**	ON	OFF	OFF	OFF	ON
35	ON	ON	OFF	OFF	OFF	**50**	OFF	ON	OFF	OFF	ON
36	OFF	OFF	ON	OFF	OFF	**51**	ON	ON	OFF	OFF	ON
37	ON	OFF	ON	OFF	OFF	**52**	OFF	OFF	ON	OFF	ON
38	OFF	ON	ON	OFF	OFF	**53**	ON	OFF	ON	OFF	ON
39	ON	ON	ON	OFF	OFF	**54**	OFF	ON	ON	OFF	ON
40	OFF	OFF	OFF	ON	OFF	**55**	ON	ON	ON	OFF	ON
41	ON	OFF	OFF	ON	OFF	**56**	OFF	OFF	OFF	ON	ON
42	OFF	ON	OFF	ON	OFF	**57**	ON	OFF	OFF	ON	ON
43	ON	ON	OFF	ON	OFF	**58**	OFF	ON	OFF	ON	ON
44	OFF	OFF	ON	ON	OFF	**59**	ON	ON	OFF	ON	ON
45	ON	OFF	ON	ON	OFF	**60**	OFF	OFF	ON	ON	ON
46	OFF	ON	ON	ON	OFF	**61**	ON	OFF	ON	ON	ON
47	ON	ON	ON	ON	OFF	**62**	OFF	ON	ON	ON	ON

4.4 For FleX-Net™ and MMX™ Panels

Set the annunciator “Address” (see the manual for the fire alarm control panel being used), as follows in the following table:

Table 6 Annunciator “Address” Settings

Address	SW1-1	SW1-2	SW1-3	Address	SW1-1	SW1-2	SW1-3
33	ON	OFF	OFF	**37**	ON	OFF	ON
34	OFF	ON	OFF	**38**	OFF	ON	ON
35	ON	ON	OFF	**39**	ON	ON	ON
36	OFF	OFF	ON				

firealarmresources.com

4.5 For FX-3500, FX-3500RCU, FX-3318, FX-350, FA-300, FR-320, MR-3500, MR-3500RCU, and MR-2350 Panels

Set the annunciator “Address” (see the manual for the fire alarm control panel being used - FA-300, MR-2300, FR-320 is 6 annunciator addresses maximum), as follows in the following table:

Table 7 Annunciator Addresses

DIP Switch Positions	Annunciator Address						
	1	2	3	4	5	6	7
SW1-1 (A0)	ON	OFF	ON	OFF	ON	OFF	ON
SW1-2 (A1)	OFF	ON	ON	OFF	OFF	ON	ON
SW1-3 (A2)	OFF	OFF	OFF	ON	ON	ON	ON

4.6 The RAX-1048TZDS Adder Annunciator Chassis

P1: Connects to the Main Annunciator Chassis, or to the previous Adder Annunciator Chassis.

P2: Connects to the Next Adder Annunciator Chassis.

4.7 The RAM-1032TZDS Main Annunciator Chassis

P2: Connects to the first Adder Annunciator Chassis.

P11: Not used.

Jumpers: Factory set. *Do not change*.

Terminals: See Wiring Instructions on page 3 for details.

SW1, SW2: Set DIP Switches as described in 4.0 DIP Switch Settings on page 4.

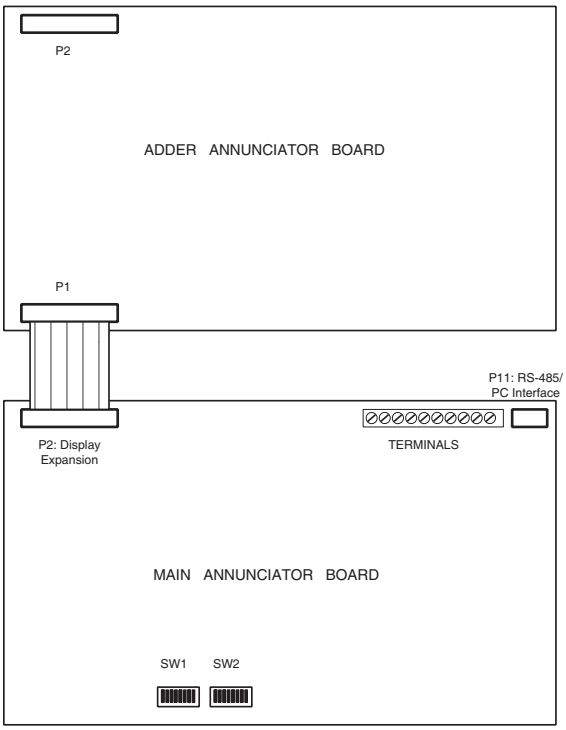

Figure 3 Annunciator Connections

4.8 The RAM-1016TZDS Main Annunciator Chassis

P2: Not used. No expansion allowed.

P11: Not used.

Jumpers: Factory set. *Do not change*.

Terminals: See Wiring Instructions on page 3 for details.

SW1, SW2: Set DIP Switches as described in 4.0 DIP Switch Settings on page 4.

JW6: RS-485 termination jumper. Remove on all except for last RAM-1016TZDS.

firealarmresources.com

5.0 Specifications and Features

5.1 Enclosures

The finish of all enclosures is painted semi-gloss off white, the backbox is black. Add the suffix “R” for red painted door. For enclosure dimensions see Mechanical Installation on page 2..

Table 8 Enclosure Model Descriptions

Model Numbers	Material	Description
BB-1001D/R **MMX-BB-1001D/R**	18 GA. CRS	Backbox for one annunciator chassis with keylock door
BB-1002D/R **MMX-BB-1002D/R**	18 GA. CRS	Backbox for two annunciator chassis with keylock door
BB-1003D/R **MMX-BB-1003D/R**	16 GA. CRS	Backbox for three annunciator chassis with keylock door
BB-1008D/R **MMX-BB-1008D/R**	16 GA. CRS Door is 14 GA.	Backbox for eight annunciator chassis with keylock door
BB-1012D/R **MMX-BB-1012D/R**	16 GA. CRS Door is 14 GA.	Backbox for twelve annunciator chassis with keylock door

5.2 Annunciators

5.2.1 RAM-1016TZDS Main Annunciator Chassis

- 20 to 39 VDC (filtered or full-wave-rectified)
- Sealed membrane-like buttons and LED indicators.
- Local Buzzer, Indicators (AC-ON, Common Trouble, Remote Failure, Aux. Disconnect, Acknowledge, General Alarm, Signal Silence, Test/Config Mode), and Controls (System Reset, Lamp Test, Fire Drill, Aux. Disconnect, Buzzer Silence, Signal Silence, General Alarm, Acknowledge).
- Buzzer silence activation silences the main fire alarm panel buzzer and all attached annunciator buzzers.
- Annunciation of up to 16 points with trouble annunciation.
- Non-expandable.
- Standby: 50 mA Max., All LEDs “On”: 150 mA Max.

5.2.2 RAM-1032TZDS Main Annunciator Chassis

- 20 to 39 VDC (filtered or full-wave-rectified)
- Sealed membrane-like buttons and LED indicators.
- Local Buzzer, Indicators (AC-On, Common Trouble, Remote Failure, Aux. Disconnect, Acknowledge, General Alarm, Signal Silence, Test/Config Mode), and Controls (System Reset, Lamp Test, Fire Drill, Aux. Disconnect, Buzzer Silence, Signal Silence, General Alarm, Acknowledge).
- Buzzer silence activation silences the main fire alarm panel buzzer and all attached annunciator buzzers.
- Annunciation of up to 32 points with trouble annunciation.
- Expandable by using up to four RAX modules.
- Standby: 50 mA Max., All LEDs “On”: 300 mA Max.

firealarmresources.com

5.2.3 RAX-1048TZDS Adder Annunciator Chassis

- Interconnect via one ribbon cable to RAM-1032TZDS or to previous RAX-1048TZDS.
- Annunciation of up to 48 additional points with trouble annunciation.
- Standby: 22 mA Max., All LEDs “On”: 262mA Max.

5.3 Current Drain for Battery Calculations

The lamp test feature draws the maximum normal current because it illuminates all lamps one chassis at a time. Thus the currents are:

Normal Standby Current = 50 mA + [_____ X 15 mA]
(number of adder chassis)

Maximum Alarm Current = Max. Main Annunciator Alarm Current (mA) + [_____ X 15 mA]
(number of adder chassis)

Use the **Normal Standby Current** for battery size calculations (see the fire alarm control panel manual for battery calculations) which includes the current drain for the Trouble Buzzer, Trouble LED, and one alarm LED. Use the **Maximum Current** to calculate the wire size (see Wiring Instructions on page 3).

5.4 Environmental Specifications

This annunciator is intended for indoor use only.

firealarmresources.com

firealarmresources.com

firealarmresources.com

firealarmresources.com

MGC™

CANADA - Main Office
25 Interchange Way
Vaughan, ON L4K 5W3
Tel: (888) 660-4655
(905) 660-4655
Fax: (905) 660-4113

U.S.A
4575 Witmer Industrial Estates
Niagara Falls, NY 14305
Tel: (888) 660-4655
(905) 660-4655
Fax: (905) 660-4113

© MGC 2018
Printed in Canada
Subject to change without prior notice

www.mircom.com

firealarmresources.com