Extended Manual for RADDY RF919

V2.5, August 1st, 2024

Thank you for purchasing a RADDY RF919.

Before use, please read this extended manual carefully and keep it for later reference.

Table of Contents

Table of Contents **2**

About RADDY **6**

1 Revision history of this document **7**

2 Product overview **8**

3 Product features **9**

4 What is in the box? **11**

5 Get started **13**

6 Buttons and their functions **15**

6.1 Buttons below the primary display *15*

6.2 Buttons below the secondary display *16*

6.3 Buttons surrounding the tuning knob *17*

6.4 Buttons besides the numerical keypad *18*

6.5 Buttons and sockets on the right side of the radio *19*

6.6 Switch and socket on the back side of the radio *20*

6.6.1 External antenna connected to the 3.5mm TRS 20

6.6.2 Automatic mode for MW and SW 20

6.6.3 Manual mode for MW, SW1 and SW2 20

6.6.3.1 Manual MW tuning 21

6.6.3.2 Manual SW tuning 21

6.7 Buttons and sockets on the top side of the radio *21*

6.7.1 WT antenna connected to SMA-m socket 21

6.7.2 External loop antennas connected to the 3.5mm TRS socket 21

6.7.3 Switch for activating external loop antennas 21

7 The primary and secondary screen **22**

7.1 The primary screen *22*

7.2 Icons on primary screen *22*

7.3 Messages on primary screen 25
7.4 The secondary screen 26

8 Functions 27

8.1 Power on / Power off 27
8.1.1 Turn the radio on/off 27
8.1.2 Set the sleep timer 27
8.2 Adjust the volume 27
8.3 Listen to the radio 27
8.3.1 Supported frequency bands 28
8.3.2 FM frequency starting point 28
8.3.3 MW frequency starting point and corresponding stepping value 29
8.3.4 Search for active stations 29
8.3.4.1 Search frequencies manually using the tune keys 29
8.3.4.2 Search frequencies automatically using the tune keys 29
8.3.4.3 Search and store active radio stations using the SCAN-key 30
8.3.4.4 Search by rotating the tuning knob 30
8.3.5 Select meter waves 31
8.3.6 Store channels manually 31
8.3.7 Recall previously stored channels 31
8.3.8 Delete channels 32
8.3.9 Weather Band of North America 32
8.3.10 Reception settings 33
8.3.10.1 FM reception settings 34
8.3.10.2 SW (AM) and CB reception settings 35
8.3.10.3 SW (SSB), VHF and UHF reception settings 36
8.3.10.4 AIR reception settings 37
8.3.11 Select bandwidth 38
8.3.12 SW Demodulation types 38
8.3.13 Demodulation types of other bands 39

9 Use of TF card 40

9.1 Inserting a TF card 40
9.2 Automatic playback of tracks 40
9.3 Record on TF card 41

10 Equalizer setting 42

11 Bluetooth mode 43

11.1 Connect via Bluetooth 43
11.2 Disconnect from Bluetooth 43

12 Control via APP 44

12.1 The APP interface 45
12.2 The APP symbols and controls 46

12.3 Operating modes 49
12.3.1 TF card playback 49
12.3.2 PC mode 49
12.3.3 Bluetooth audio mode 50

13 Use of the lock button 50

14 Set current date and time 51

15 Set alarm time 52

15.1 Turn off the alarm time 53

15.2 Confirm alarm 53

16 System settings 54

17 USB Type-C charging 56

18 Use as TF card reader 56

19 AUX input 56

20 Temperature display 56

21 Firmware update 57

21.1 What is needed 58
21.1.1 microSD/flash card with no more than 64GB 58
21.1.2 Download firmware update archive 58
21.1.3 unzip archive 58
21.1.4 Content of archive 60
21.1.5 Copy firmware update to microSD/flash card 61
21.1.6 Make sure that the radio has sufficient power 61

21.2 Perform update 61
21.2.1 Insert the microSD/flash card 61
21.2.2 Power on the radio 62
21.2.3 Confirmation of update and restart of radio 63

21.3 Check if update has been successful 63
21.3.1 Remove microSD/flash card 63

22 Firmware Release Notes 64

22.1.1 V1.706 as of June 26th 2024 64
22.1.2 V1.689 as of April 2nd 2024 64

23 Use of antennas 65

23.1 Built-in magnetic antenna 66

23.2 Receiving operating mode 66
23.2.1 External antenna sockets 66

24 Frequencies of some stations 67

24.1 Shortwave stations 67

24.2 Free communication channels 68

24.2.1 GMRS/FRS frequencies 68

24.2.2 PMR446 frequencies 69

24.2.3 PRS409 frequencies 69

25 Cleaning and maintenance 70

26 Safety tips 70

27 Common problems and how to solve them 71

28 Technical specifications 72

28.1 General specifications 72

28.2 Covered frequency ranges 72

29 Certification 73

30 Where to find support material 74

About RADDY

Our Mission: Keep connected while you are enjoying the outdoors.

We all could use a little more time outdoors. When we get off the couch and take our eyes off the screen, we can see some beautiful things. Even when we are enjoying the outdoors it can be nice to have a few modern comforts.

From shortwave radios to emergency radios, weather stations to solar panels, and everything in between, we offer a line of outdoor and emergency-preparedness products to keep you safe or just let you enjoy the outdoors while staying connected to the rest of the world.

We believe that preparing for whatever comes next is as important as enjoying the outdoors.

Be prepared, get Raddy, and HAVE FUN!

Please feel free to contact us by email via support@iraddy.com and we'll do our best to solve your concerns.

Copyright© 2024 by RADDY

All rights reserved. This manual or any portion thereof may not be reproduced or used in any manner whatsoever without the written permission of the publisher, except for the use of brief quotations embodied in critical reviews and certain other noncommercial uses permitted by copyright law. For permission requests, write to the publisher.

Disclaimer

This document is based on the version of the manual that comes with the radio but with lots of enhancements and corrections. It does describe all those details, that are required to know in order to get the most out of your RADDY RF919.

In case something does not work as you´d expect it to, get in touch with our support. Our support is available via support@iraddy.com only. If you find anything that needs correction or should be added, please let us know via the very same email address.

Android™, IOS™ and Windows™ are the properties of their respective owners. Should any trademark attribution be missing, mistaken or erroneous, please contact us as soon as possible for rectification.

1 Revision history of this document

We are constantly trying to update our manuals according to the feedback we get for our customers. If you miss any aspect in this document or believe that something has been described incorrectly or in a misleading way, please feel free to give us feedback at support@iraddy.com. We will try our best to make the next version of this document of even more added value for you.

Revision	Changes	released
V2.5	• Minor corections	2024-08-01
V2.4	• Minor Update regarding "Firmware update"	2024-07-02
V2.3	• Added description of features added with firmware V1.706 • Added chapter on Firmware update • Added details on new system setting options • Added details on how to select free citizen radio band channels of within Europe, North America and China • Smaller updates	2024-06-26
V2.2	• Extended manual will be included with future shipments	2024-06-03
V2.1	• Correction of typos • Added chapter on Common problems and how to solve them	2024-04-16
V2.0	• Numerous additions and corrections • Added chapter on APP-usage with screenshots • All content revised and checked against radio	2024-04-14
V1.0	• Initial version which comes with the radio	2024-04-08

2 Product overview

Our aim in new product R&D has always been continuous innovation and meeting the needs of users. We hope you like our meticulously crafted RADDY **RF919** radio which will bring even more happiness to people who like to listen to radio stations all over the world. This is a broadband multi-functional radio. For more details, please read this extended manual.

3 Product features

- The RADDY **RF919** can receive wireless signals of LW, MW, SW, CB, FM, AIR, VHF, WB and UHF. It supports several kinds of demodulation (FM, STEREO, AM, LSB, USB), Bandwidth (BW) settings according to the used frequency band, attenuation for local stations, preamplifier for DX-stations, double tuning knob for quick/slow tuning, magnetic rod antenna for LW and MW receiving, an expandable rod antenna for all other bands, Connection socket for DIY MW/SW loop antenna and so on for best reception results.
- The radio supports multiple ways of choosing a radio station:
  - Enter its channel number using the numerical keypad
  - tuning fine tuning
  - tuning quick tuning
  - numerical keypad to choose automatically and searching and storing a channel automatically.
- In receive mode, the radio can store up to 1,600 channels within its huge memory (FM/MW/SW/VHF/UHF/LW/CB/AIR: 200 channels for each).
- The radio has two screens, a primary screen (to display the various operating modes) and the secondary screen (to display the audio level, time, signal intensity, etc.). The primary screen is a Film-Super-Twisted (FSTN) type all-sight screen with Vertical Alignment (VA) color, giving users the highest contrast rate and superior readability. It measures 3.54 inch in diameter with a display window of 82.9mm * 45.2mm whereas the secondary screen comes with a display window of 47.5 mm * 35.56mm.
- The primary screen backlight color is selectable.
- The radio can be remotely operated within an operating radius of approximately 20 m using a mobile APP (Android and IOS are supported).
- Advanced audio technology is used to realize Bluetooth connection for wireless music play.
- TF cards (microSD size) with up to 256 GB of MP3, WMA, WAV, APE and FLA files are supported to store your favorite music.
- Two powerful and replaceable 18650 2500mAH lithium batteries give a total of 5000 mAh to ensure a long lasting operating time.
- The meter waves are pre-sliced. SW (AM) has 15 meter waves, SW (SSB) has 10 meter waves, AIR has 5 meter waves, VHF and UHF both have 8 meter waves, which allows you to switch between frequencies and search your channel quickly.
- Whenever music is being played, the current audio level is displayed.
- According to your needs you either listen to the 3-inch all-band 20W speaker with BASS effect or via a stereo earphone connected to the 3.5mm TRS earphone socket on the right side of the RADDY RF919.

- The radio is independent of national boundary limitations.
  - FM has three frequency start points to choose from:
    - FM1: 87.5-108 MHz
    - FM2: 76.0-108 MHz
    - FM3: 64.0-108 MHz
  - AM comes with two frequency start points to choose from:
    - AM 522-1710 kHz (step value: 9 kHz):
    - AM: 520-1710 kHz (step value: 10 kHz)
- In TF card playback mode, 4 modes are supported:

Icon	Play mode
	Repeat tracks in current folder
	Play random track
	Repeat all tracks
	Repeat current track

- Audio streams can be recorded on inserted TF card as MP3 with 160 kBit/s.
- Keyboard lock (on the right side of the radio) to prevent accidental changes.
- A sleep timer can be set as 90, 80, 70, 60, 50, 40, 30, 20 and 10 minutes.
- Two independent alarm times for scheduled power-on can be set.
- Whenever scheduled power-on has been selected, the power-off time after scheduled power-on can also be set.
- Backlight time for the primary screen, the secondary screen and the keys can be setup independent from each other. This makes the radio very convenient for you to use in the darkness.
- Various equalizer settings align the radio to your personal preferences.
- The current temperature, time and date may be displayed on the primary screen.
- If the radio is connected via USB to a PC it can act as a TF card reader and an external PC speaker.
- In case you ever completely messed up the radio, you can reset it with the factory data.

4 What is in the box?

Thank you for choosing the RADDY **RF919**. We recommend that you first check the delivery contents listed in the following table and keep the packaging for later storage. If something is missing or damaged, please contact your dealer immediately.

Item	Quantity	Picture
RADDY **RF919** high-performance all-band radio	1	color depending on what had been ordered
T-shape external antenna *) Inductance: 132µH Antenna Gain: +3-5dB	1	
Carrying strap	1	
USB-C charging cable	1	

*) If this antenna is missing, please contact the iRaddy customer support at support@iraddy.com to get yours.

Item	Quantity	Picture
Screwdriver	1	
Brush	1	
Extended Manual	1	

5 Get started

This chapter is limited to just two pages and intended for those customers that want to get started hearing some FM radio stations using their RADDY RF919 without having to read the complete manual first.

The red circled numbers represent the location of the operating element for the corresponding step as described on the next page.

1. Carefully flip out the rod antenna located at the top of the radio and direct it towards the sky.
2. Carefully extract the rod antenna to its maximum length.
3. Short press [VOL-] or [VOL+] just to turn on the backlight
4. Immediately thereafter, short press [SLEEP ⏻] to power on the radio.
5. The radio should now be in "FM" receive mode. If not, press [RADIO BAND] until it is in "FM" receive mode
6. Long press [SCAN ATS] to scan the current frequency band and store all found radio stations to separate channels. This process may take some minutes. "PRESET" will be blinking on the primary display during the process. You will hear the first radio station found as soon as the scan process has completed.
7. Short press [PRESET] until "PRESET" is constantly displayed on the primary screen. This turns on the channel mode with the channels stored in the previous step being easily available.
8. Use [TUNE+ NEXT △] and [TUNE- PREV ▽] to select one of the stored radio stations.
9. Use [VOL-] and [VOL+] to align the volume as required.

Now listen to your new RADDY RF919. Whilst doing so, read the remaining pages of this manual.

Long press [SLEEP ⏻] to turn off the radio.

6 Buttons and their functions

The RADDY RF919 is equipped with three antenna sockets for connecting external antennas, two screens, two tuning wheels, several switches and keys. This chapter gives a brief explanation of all those elements.

6.1 Buttons below the primary display

Button	Function
SQL	• When the radio is working, short press [SQL] to mute and unmute. "" will be flashing whenever muted. • In VHF/UHF/AIR/CB/SW mode , long press [SQL] for 2 seconds to activate ("") or deactivate ("") the squelch function.
RADIO BAND	In receive mode, short press [RADIO BAND] to switch between FM, SW, MW and LW.
SUB BAND	• In FM/MW mode, short press [SUB BAND] to choose the FM or MW frequency receiving range. Please see chapter 8.3.2 "FM frequency starting point" on page 28 and 8.3.3 "MW frequency starting point and corresponding stepping value" on page 29. • In SW/UHF/VHF/AIR mode, short press [SUB BAND] to switch between the various SW&UHF&VHF&AIR meter waves. Please see chapter 8.3.5 "Select meter waves" on page 31. • In UHF mode, long press [SUB BAND] to switch between the various free communication frequencies of China, Europe and North America • In TF card mode, short press [SUB BAND] to switch between play modes: "Repeat current folder", "Play random track", "Repeat all tracks" and "Repeat current track". Please see chapter 9.2 "Automatic playback of " on page 40. • In TF card mode, long press [SUB BAND] to restart current track from the beginning
UHF VHF	In receive mode, short press [UHF VHF] to switch between AIR, CB, WB, VHF and UHF.
BW DEMOD	• In receive mode, short press [BW DEMOD] to set the bandwidth.. See chapter 8.3.11 "Select bandwidth" on page 38. • In FM/SW receive mode, long press [BW DEMOD] to set the demodulation type. See chapter 8.3.12 "SW Demodulation types" on page 38 and 8.3.13 "Demodulation types of other bands" on page 39.
SEL...	• In LW, MW, SW, CB, VHF, WB and UHF mode , short press [SEL...] to choose the mode of antenna: ○ DX Antenna signal will pre pre-amplified by +20dB to allow reception of weak signals ○ INTERNAL manual tuning of built-in antenna (including rod antenna/ magnetic rod) ○ EXTERNAL External antenna (including WT antenna and external loop antenna)

Button	Function
ATT -10/20	In LW, MW, SW, CB, VHF, WB and UHF mode with neither manual tuning of built-in antenna nor externa antenna selected, short press [ATT -10/20] to switch between "LOCAL" and "EXT" mode.
MODE	• When the radio is working, short press [MODE] to switch between Bluetooth, TF playback and PC mode (acting as TF card reader and audio output device for the USB-connected PC) • Long press [MODE] to disconnect Bluetooth when in Bluetooth mode. • When the radio is turned off and the time is displayed, long press [MODE] to disconnect APP.

6.2 Buttons below the secondary display

Button	Function
TIME/SET	• When the radio is not working but in display mode, long press [TIME/SET] to set the time using the primary screen. See chapter 14 "Set current date and time" on page 51. • When the primary screen of the radio is set to be lit for 5-30 seconds in the system settings menu (see chapter 16 "System settings" on page 54 for details regarding "A-LCD SETTING"), short press [TIME/SET] to constantly turn on the backlight of the primary screen. This will be indicated by "☼" in the lower left of the primary screen. Short press [TIME/SET] again restore the backlight time to the value as set within the system settings menu and the "☼" will disappear. In case the system settings time for the primary screen had been set to "FULL", the backlight will constantly be on, regardless of the status of the "☼" symbol.
ALARM	• When the secondary screen of the radio is set to be lit for 5-30 seconds in the system settings menu (see chapter 16 "System settings" on page 54 for details regarding "B-LCD SETTING"), short press [ALARM] to constantly turn on the backlight of the secondary screen. This will be indicated by "☼" in the lower left of the primary screen. Short press [TIME/SET] again restore the backlight time to the value as set within the system settings menu and the "☼" will disappear. In case the system settings time for the secondary screen had been set to "FULL", the backlight will constantly be on, regardless of the status of the "☼" symbol. • Long press [ALARM] to set the alarm clock. See chapter 15 "Set alarm time" on page 52.

Button	Function
DISPLAY	• In time/Bluetooth/TF card playback mode, short press [DISPLAY] to see the alarm time 1 on the secondary screen. On second short press of [DISPLAY], alarm time 2 will be shown on the secondary screen and on third press of [DISPLAY] the current time will again be shown on the secondary screen. • In receive mode, short press [DISPLAY] to switch back and forth between SNR/RSSI and current time display on the secondary screen. • In normal time display mode, long press of [DISPLAY] to turn off the time display and backlight of the primary and secondary screen (at least firmware V1.706 required)
SLEEP ⏻	• Press any button to turn on the light and show the time. When the time is displayed, short press [SLEEP ⏻] to turn on the radio. In receive mode, long press [SLEEP ⏻] to turn off the radio. See chapter 8.1.1 “Turn the radio” on page 27. • Long press [SLEEP ⏻] to set the sleep power-off time. See chapter 8.1.2 “Set the sleep timer” on page 27.

6.3 Buttons surrounding the tuning knob

Button	Function
	• In receive mode, rotate the inner and outer tuning knob [] to select a receiving frequency. • Rotate the outer tuning knob [] to progressively increase/decrease at the min stepping value of the currently selected frequency band • Short press the inner tuning knob [] to start changing the stepping value . Short press the inner tuning knob [] to confirm the selected stepping width . • Rotate the inner tuning knob [] to quickly change the least selected digit which will start fliashing. As long as it is flashing, you now can advance to the next digit left to the current with a short press of the inner tuning knob []. • In TF card playback mode, rotate the inner and outer tuning knob [] to select a music and press inner tuning knob [] to confirm your selection. • When setting the time- ,alarm clock- or system-menu, press the inner tuning knob [] to set the selected parameter within the corresponding submenu.
SCAN... ATS	• In VHF/UHF/AIR/CB mode, short press [SCAN... ATS] to enter the Scan-Freq mode, SCAN for stations with signals, if no signal stations are detected, they will always be searched. Press [SCAN... ATS] again to exit Scan-Freq mode. • In receive mode (excluding WB), long press [SCAN... ATS] for 2 seconds to automatically search/store all found stations to channels. • In WB receive mode, long press [SCAN... ATS] for 2 seconds to start/stop automatic search of WB channels.

Button	Function
SET...	• Short press [ ] to switch between temperature display and display according to working mode. • When the radio is turned on, long press [ ] to enter the menu for reception settings. See chapter 8.3.10 “Reception settings” on page 33. • When the radio is turned off and only time is displayed, long press [ ] to enter the menu for general radio settings. See chapter 16 “System ” on page 54.
DEL	• In receive mode, select a previously stored channel and long press [ ] for 2 seconds to delete the selected channel. • When manually entering a number using the numerical keypad [ ], initiated by hitting the [EN] key, press [ ] to delete the last entered digit. • In TF card mode , select the recording to be deleted and long press [ ] for 2 seconds. When “dEL” is flashing on the primary screen, long press [ ] again to confirm deletion.
PRESET	• Short press [ ] to switch between channel and frequency mode. • Long press [ ] for 2 seconds to store a channel, and short press [ ] again to confirm the storage.

6.4 Buttons besides the numerical keypad

Button	Function

7 8 9
4 5 6
1 2 3
0
	• In receive mode:
	  ○ *Select a frequency*: By using the [ ] key make sure that frequency mode is selected. Now short press [EN] to enter a frequency using the numerical keypad [ ] and press [EN] to confirm.
	  ○ *Select a channel*: Directly press the number key to switch to channel mode by entering the required channel number via the numerical keypad [ ] and press [EN] to confirm.
	  ○ *Manually store a channel*: long press [ ] to enter the mode of manual channel storing. Press the number key to select an address of channel storing, and short press [ ] to confirm.
	• In TF card playback mode, short press [ ] and [EN] to select a music.

TUNE+ △ NEXT	• In receive mode, short press [ ] to progressively increase the min step value of frequency at all brands. Long press it for 2 seconds to search channels up automatically. • In TF card mode, short press [ ] to play the next music, and long press [ ] to play fast-forward. • In Bluetooth play mode [ ] short press this button to play the next music.

Button	Function
TUNE- PREV ▽	• In receive mode, short press [TUNE- PREV ▽] to progressively decrease the min step value of frequency at all bands. Long press [TUNE- PREV ▽] for 2 seconds to search channels down automatically. • In TF card mode, short press [TUNE- PREV ▽] to play the previous music, and long press [TUNE- PREV ▽]to play fast-backward. • In Bluetooth play mode, short press [TUNE- PREV ▽] to play the previous music.
VOL+	When the radio is working, short press/long press [VOL+] to increase the volume.
VOL-	When the radio is working, short press/long press [VOL-] to decrease the volume.
EN	• In receive mode, short press [EN] to select a frequency using the numerical keypad [ ] and press [EN] again to confirm. • In TF card mode, short press [ ] and [EN] to select a track.
EQ	When the radio is working, short press [ ] to switch between the Equalizer modes NORMAL, POP, ROCK, JAZZ, CLASSIC, COUNTRY and, depending on operating mode NEWS, VOICE, DAC-ANALOG and CW.

6.5 Buttons and sockets on the right side of the radio

Button	Function
	When an external T-shaped antenna is used in MW/SW mode, align the SignalNoiseRatio (SNR) and ReceivedSignalStrengthIndicator (RSSI) with the tuning knob on the right side of the radio. The higher the SNR and RSSI values are, the better.
• UN-LOCK • RS-LOCK • .....LOCK	• Shift the switch to the “UN-LOCK” position and all keys and knobs are not locked. • Shift the switch to the “RS-LOCK” position and the tuning knobs are locked. • Shift the switch to the “.....LOCK” position and all keys and knobs are locked (the state of lock)
AUX	When the radio is working, insert the 3.5mm external audio source and listen to the music of the external source.
	When the radio is working, insert the 3.5mm TRS plug of the earphone cable to listen to the radio and deactivate the internal loud speaker.
TF CARD	When the radio is working, insert a TF card to start playback the tracks stored on the inserted TF card.
DC5V	• USB-C Charging jack • Connect to USB port of PC to operate radio as external TF card reader and external speaker (radio needs to be powered on and in “PC” mode).

6.6 Switch and socket on the back side of the radio

The RADDY RF919 comes with a built-in rod antenna. Alternatively, an external antenna can be connected to the radio, replacing the internal rod antenna.

6.6.1 External antenna connected to the 3.5mm TRS

An external antenna can be connected to the 3.5mm TRS socket marked "● EXT.ANT ●" at the backside of the radio. As soon as the 3.5mm plug is inserted into the 3.5mm TRS socket, the internal rod antenna gets disconnected from the radio. The connections of the TRS socket at the backside of the radio are as follows:

Pin	Signal
Tip	External antenna line
Ring	GND/Shield
Sleeve	GND/Shield

6.6.2 Automatic mode for MW and SW

Normally the antenna signal is routed by the automatic mode via the following RF channels

- 10db attenuation
- 20dB attenuation
- HighPassFIlter (HPF) for frequencies above 30 MHz,
- LowPassFilter (LPF) for frequencies below 30 MHz
- LowNoiseAmplifier (LNA1) or
- direct connection

to the LowNoiseAmplifier LNA2.

> ***Notes***: *More details on the internal building blocks to be found in chapter 23 "*Use of antennas*" on page 65.*

6.6.3 Manual mode for MW, SW1 and SW2

Alternatively, the antenna signal can be routed via the manual antenna tuner, tuned by its manual tuning knob [○] and the manual switch on the backside of the radio via the SW antenna tuner selection to the very same LowNoiseAmplifier LNA2.

If used with a suitable external antenna, connected to the socket on the backside of the RADDY RF919, the radio supports a manual antenna tuning function for MW, SW1 and SW2 using the manual tuning knob [○] on the right side of the radio. This can improve the receiving sensitivity to a certain extent if used correctly. But if the tuning method is not used correct, the receiving performance may be even worse than if the internal antenna is used.

6.6.3.1 Manual MW tuning

When the switch is set to the “MW” position, turn the manual tuning knob [●] on the right of the radio and observe the SNR and RSSI readings on the secondary screen. The higher the values, the better. The best position of the manual tuning knob can be determined by listening to the clarity of the sound.

6.6.3.2 Manual SW tuning

When the switch is set to either the “SW1”-position (5...15 MHz) or to the “SW2”-position (13...30 MHz), press the Antenna select [SEL] key to select manual tuning. The primary screen will display “ INTERNAL ”. Now turn the manual tuning knob [●] on the right of the radio and observe the SNR and RSSI readings on the secondary screen. The higher the values, the better. The best position of the manual tuning knob can be determined by listening to the clarity of the sound.

6.7 Buttons and sockets on the top side of the radio

On the top of the RADDY RF919 two more sockets for connection of external antennas are located.

6.7.1 WT antenna connected to SMA-m socket

The male SMA-socket “WT ●” on top of the radio can be used in combination with a Walky-talky (WT) antenna suitable for the selected band (either VHF or UHF band).

6.7.2 External loop antennas connected to the 3.5mm TRS socket

If you are familiar with creating your own loop antenna for Long Wave (LW), Medium Wave (MW) and Short Wave (SW), you may do so and connect such to the 3.5mm TRS socket at the top of the radio. The connections are as follows:

Pin	Signal
Tip	IN
Ring	GND/Shield
Sleeve	GND/Shield

Make sure that the LW antenna should have an inductance of 2.2mH. The MW antenna should have an inductance of 250µH and the SW1 antenna should have an inductance of 7.5µH (for the frequency range 2.4...8MHz). The SW2 antenna may be just a ring antenna. The radio has a built-in adaptive tuning function for LW, MW and SW1, whereas for SW that function is not activated by default.

6.7.3 Switch for activating external loop antennas

To activate an external antenna connected to the 3.5mm TRS socket on the top of the radio, turn the switch right beside the TRS socket from the default “OFF”-position to its “ON-ANT”-position.

***Notes**: Keep in mind that all antenna connectors are sensitive to static electricity and may easily get damaged if you do not take extreme care on that.*

7 The primary and secondary screen

7.1 The primary screen

The primary screen displays most of the operating conditions and parameters. The visualized information is depending on the currently selected operating mode.

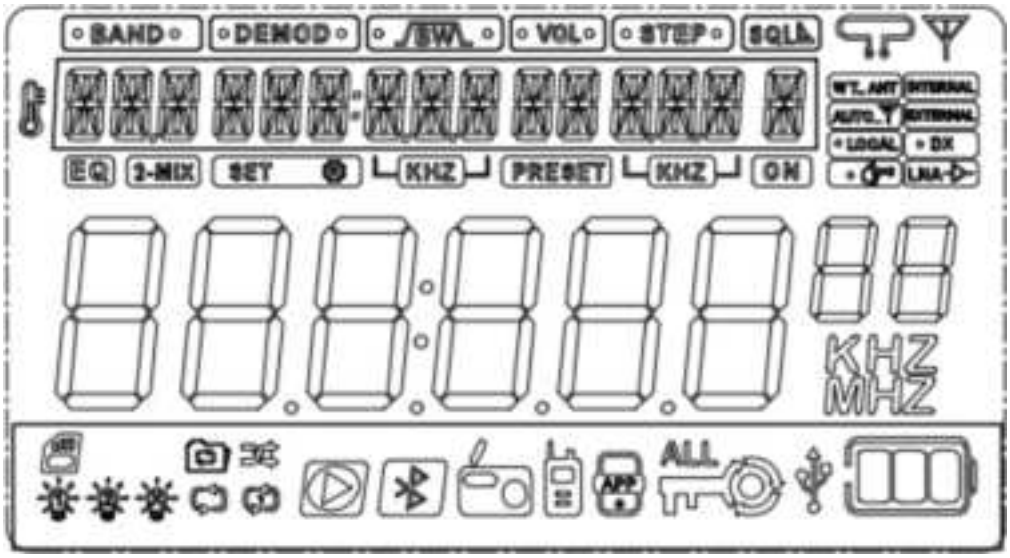

7.2 Icons on primary screen

The various icons refer to different parameters as explained in the below table:

Icon	Parameter
	Temperature
	Band: LW, MW, SW, CB, FM, AIR, VHF, WB, UHF
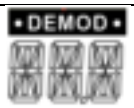	Demodulation mode: AM, FM, WFM, USB, LSB
	Bandwidth
	Volume
	Step value
	Squelch level • “ ” squelch is ON • “ ” squelch is off

Icon	Parameter
	Use of loop antenna (magnetic rod loop antenna)
	Rod antenna (including the external antenna)
	Use of SMA socket input
	Built-in antenna (including rod antenna/magnetic rod) receiving
	Automatic antenna mode
	External antenna connected to one of the three sockets activated (including WalkyTalky (WT) and the two 3.5mm sockets)
	Antenna signal will be attenuated by 10dB/20dB for better reception of local stations
	Antenna signal will not be attenuated in order to receive even weak signals. (default)
	Manual antenna tuning
	Use of LowNoiseAmplifier LNA1 (or setting)
	Mode for settings of parameters is active
	Search and store a channel automatically Store a channel manually (character flashing) Take a channel (character always on)
	• Radio is in standby mode: show the time • Radio is working: o FM mode: show the frequency o Bluetooth mode: "BT" is displayed o PC mode: "PC" is displayed o TF card playback mode: show the elapsed playing time of the current track • As soon as a 3.5mm plug gets inserted to the "AUX" input of the radio, "AUX" is displayed
kHz	The stated number represents the frequency in kHz
MHz	The stated number represents the frequency in MHz

Icon	Parameter
	TF card is inserted
	Indicator for the primary screen to be steady on
	Indicator for the secondary screen to be steady on
	Repeat tracks in current folder
	Play random track
	Repeat all tracks
	Repeat current track
	Bluetooth & TF card playback ○ flashing “ ”: pause ○ constant “ ”: play
	Bluetooth connection: ○ flashing “ ”: waiting for connection ○ constant “ ”: successful connection
	Radio receive mode
	Radio is successfully connected to the mobile APP
	Lock: lock the tuning knob lock all
	Power for charging the battery is supplied via USB-C connector
	Current charging level of battery

7.3 Messages on primary screen

Message	Meaning
ALE	Weather band alarm of North American countries
A-LCDSETTING	• Set backlight time of primary screen • Set backlight color of primary screen
B-LCDSETTING	Set backlight time of secondary screen
C-KEYSETTING	Set backlight time for buttons
ANT-CHANNEL	Select the antenna channel
ANT-DEFAULT	Default settings for antenna signal
ANT-HPF	Antenna routing via HighPassFilter (HPF)
ANT-KEEP-PASS	Keep antenna pass
ANT-LNA 1	Antenna routing via LNA1
ANT-LNA 1 antenna LNA1 channel	ANT-LPF Antenna routing via LowPassFilter (LPF) ANT-HPF Antenna routing via HighPassFilter (HPF)
ANT-LNA 1-GAIN	LNA1 antenna channel gain selection
ANT-LNA 1-GAIN-L	LNA1 antenna channel low gain
ANT-LNA 1-GAIN-H	LNA1 antenna channel high gain
ANT-LNA2-GAIN	LNA2 antenna channel gain selection
ANT-LNA2-GAIN-L	LNA2 antenna channel low gain
ANT-LNA2-GAIN-H	LNA2 antenna channel high gain
ANT-LPF	Antenna routing via LowPassFilter (LPF)
APP ENABLE	Enable APP connection
APP DISABLE	Disable APP connection
ATT-*** antenna attenuation selection	ANT- 10DB Antenna attenuation 10 dB ANT-20DB Antenna attenuation 20 dB
SYSTEM RESET	Factory data reset
VERSION-*-*	Version number *-*

7.4 The secondary screen

Most of the working parameters are displayed on the primary screen. However, some parameters are visualized on the secondary screen. Those are:

Icon	Description
	Audio level indicator
	Alarm clock 1 activated
	Alarm clock 2 activated
	Sleep timer has been activated
	When radio turned off (":" shown): • Display of current time (same as on primary screen) When radio operating (":" not shown): • Left two digits: Signal Noise Ratio (SNR) • Right two digits: Received Signal Strength Indicator (RSSI)

8 Functions

8.1 Power on / Power off

8.1.1 Turn the radio on/off

Short press any key to activate the time display. Short press [SLEEP ⏻] to turn on the radio. You will hear a short Morse-code ("CQ") as confirmation. When the radio is working, long press [SLEEP ⏻] for 2 seconds to turn it off. You will also hear a short Morse-code ("QRT") as confirmation. The Morse-Code can be deactivated using the system settings option for "TONE" as described in chapter 16 "System settings" starting on page 54 (at least firmware version V1.704 required).

***Note**:*	*Before using the radio for the first time, please fully charge the two installed batteries.*

8.1.2 Set the sleep timer

When the time is displayed, long press [SLEEP ⏻] for 2 seconds to set the sleep timer. "90" appears on the secondary screen indicating the default value of 90 minutes. As long as the [🛏] is blinking right beside the value you may decrease the value by 10 with a short press of [SLEEP ⏻] to choose the sleep time: 90, 80, 70, 60, 50, 40, 30, 20 and 10 minutes. After choosing the sleep time, the sleep symbol [🛏] is constantly shown on the secondary screen.

***Note**:*	*The light of the power button will have different colors depending on the current working state.*

8.2 Adjust the volume

When the radio is working, short press [VOL+] or [VOL-] for single stepping or long press [VOL+] or [VOL-] for continues alignment of the volume between "0" and "32".

8.3 Listen to the radio

Starting with as low as just 2.3 MHz and without any gap going up to 999 MHz, all radio frequency bands are covered. The frequency bands are selected using [RADIO BAND] , [AIR BAND] and [VHF VHF] (depending on the actual frequency band. Some of the bands also support different demodulation types such as NFM, WFM, STEREO, AM, LSB or USB.

8.3.1 Supported frequency bands

The RADDY RF919 does support reception of the following frequency bands. Short press [RADIO BAND] or [VHF] to select a frequency band.

Button	Band	Frequency	Remarks
RADIO BAND	FM	64-108 MHz	FM Radio band Stereo and Wide FM (WFM) demodulation
RADIO BAND	SW	2.3-30.0 MHz	Short Wave band AM, LSB and USB demodulation
RADIO BAND	MW	520-1710 kHz	Middle Wave band AM demodulation
RADIO BAND	LW	153-522 kHz	Long Wave band AM demodulation
VHF	VHF	20.00- 250.00MHz	VHF band NFM demodulation
VHF	UHF	250.00- 999.00 MHz	UHF band NFM demodulation
VHF	AIR	118.00- 138.00 MHz	Air band AM demodulation
VHF	CB	25.00- 28.00 MHz	Citizen Band AM demodulation (use the VHF band for FM demodulation and the shortwave band for LSB and USB single sideband demodulation)
VHF	WB	162.40- 162.55 MHz	Weather Band (North America only) NFM demodulation

8.3.2 FM frequency starting point

When in FM-mode, short press [STEP] to show the FM frequency starting point. Initially "6400 MHZ" will be displayed on the primary screen. Subsequent pressing of [STEP] will scroll through the three possible values of 6400 MHZ, 7600 MHZ and 8750 MHZ. The stated four digit number represents the frequency starting point for the FM band.

Value on primary screen	Frequency range
6400 MHZ	FM1: 64-108 MHz
7600 MHZ	FM2: 76-108 MHz
8750 MHZ	FM3: 87.5-108 MHz

The finally selected frequency range will be the default one.

8.3.3 MW frequency starting point and corresponding stepping value

In MW mode, short press [SCAN ATS] to show the MW frequency starting point. This may be either „520 KHZ“ or „522 KHZ“ and is shown on the primary screen.

Value on primary screen	Frequency range	Stepping value	Area
520 KHZ	520-1710 kHz	10.0 kHz	*US, Canada, Mexico and other countries of North America and South America*
522 KHZ	522-1710 kHz	9.0 kHz	Rest of world

The finally selected MW frequency range will be the default one.

***Note**: In the US, Canada, Mexico and other countries of North America and South America the stepping value is 10 kHz. In most other countries it is 9 kHz.*

8.3.4 Search for active stations

There are various options to search for active radio stations. You may search manually or even automatically by just using the tune keys [TUNE NEXT △] or [TUNE PREV ▽]. Pressing [SCAN ATS] for 2 seconds activates the automatic search for active radio stations including storing them in free channels of the radio. And of course, searching the frequency band by rotating the inner or outer tuning knob [◉] is possible as well.

8.3.4.1 Search frequencies manually using the tune keys

Short press [TUNE NEXT △] or [TUNE PREV ▽] to progressively decrease or increase with the minimum stepping value of the current frequency band.

Frequency band	Minimum stepping value
FM	0.1 MHz
SW	0.005 MHz (AM) 0.001MHz (SSB)
MW	9 kHz / 10 kHz
LW	9 kHz
VHF	0.0125 MHz
UHF	0.0125 MHz
AIR	0.025 MHz
CB	0.005 MHz

***Info**: The Weather Band does not support stepping values due to its 7 fixed channel assignments as listed in chapter 8.3.9 “*Weather Band of North America*” on page 32.*

8.3.4.2 Search frequencies automatically using the tune keys

Long press [TUNE NEXT △] or [TUNE PREV ▽] for 2 seconds to search for active radio stations at the minimum stepping value of the currently selected frequency band. Search will stop after finding a active radio station, and the found station will be played.

8.3.4.3 Search and store active radio stations using the SCAN-key

In receive mode, long press [SCAN ATS] for 2 seconds to search for active radio stations and store their frequencies automatically as channels in the huge memory of the radio. During the automatic search, the currently scanned frequency is displayed on the primary screen. Whenever an active frequency has been detected, "CH***" appears on the primary screen, with "***" being the latest stored channel number and the frequency of that radio station gets automatically stored in the next available free channel.

After a search round, search will stop automatically, and the first channel stored will be selected.

Every frequency band, except the Weather Band (WB), can hold up to 200 channels. This results in a total of 1,600 channels. The Weather Band WB has 7 fixed channel assignments as listed in chapter 8.3.9 "Weather Band of North America" on page 32.

***Note**:*	*The number of automatically stored channels depends on the local signal strength of the stations.*

8.3.4.4 Search by rotating the tuning knob

In receive mode, rotate the inner or outer tuning knob [] at the front of radio to set the receive frequency. Rotate the outer tuning knob [] to progressively increase/decrease at the minimum step value of the currently selected frequency band. Short press the small tuning knob [] to select a step value. Rotate the big tuning knob [] clockwise or anti-clockwise to select the frequency you need according to the selected step value.

The adjustable step values for the various bands are as follows:

Band	Step Value	Default Value
FM	10 kHz, 50 kHz, 100 kHz	100 kHz
SW (AM/LSB/USB)	0.01 kHz, 0.02 kHz, 0.10 kHz, 1.00 kHz, 5.00 kHz	5 kHz
LW	3 kHz, 9 kHz	9 kHz
MW stepping value is 9 kHz	3 kHz, 9 kHz	9 kHz or 10 kHz
MW stepping value is 10 kHz	5 kHz, 10 kHz,	
LW	3 kHz, 9 kHz	9 kHz
VHF	1.0 kHz, 5.0 kHz, 6.2 kHz, 7.5 kHz, 12.5 kHz, 25.0 kHz	12.5 kHz
UHF	1.0 kHz, 5.0 kHz, 6.2 kHz, 7.5 kHz, 12.5 kHz, 25.0 kHz	12.5 kHz
AIR	8.3 kHz, 12.5 kHz, 25 kHz	25 kHz
CB	0.01 kHz, 0.02 kHz, 0.1. kHz, 1.00 kHz, 5.00 kHz	5 kHz
WB	25 kHz	25 kHz

Rotate the inner tuning knob [], the least selected digit starts flashing. As long as it is flashing, you now can advance to the next digit left to the current one with a short press of the inner tuning knob [ ]. Rotate the inner tuning knob [ ] to quickly change the selected digit.

8.3.5 Select meter waves

SW, AIR, VHF and UHF have meter waves. Short press [] and press[], [] or the tuning knob to quickly find the frequency you need.

Band	Meter Wave
SW (AM)	2.3 MHz, 3.2 MHz, 3.75 MHz, 3.9 MHz, 4.75 MHz, 5.73 MHz, 7.1 MHz, 9.25 MHz, 11.5 MHz, 13.57 MHz, 15.03 MHz, 17.48 MHz, 18.9 MHz, 21.45 MHz, 25.67 MHz (15 meter waves)
SW (SSB)	2.3 MHz, 3.5 MHz, 5.3510 MHz, 7.0 MHz, 10.10 MHz, 14.0 MHz, 18.068 MHz, 21.0 MHz, 24.89 MHz, 28.0 MHz (10 meter waves)
AIR	118 MHz, 123 MHz, 128 MHz, 133 MHz, 138 MHz (5 meter waves)
VHF	30.0 MHz, 42.0 MHz, 55.0 MHz, 68.0 MHz, 100.0 MHz, 136.0 MHz, 218.0 MHz, 250.0 MHz (8 meter waves)
UHF	250.0 MHz, 320.0 MHz, 460 MHz, 580.0 MHz, 620.0 MHz, 730.0 MHz, 800.0 MHz, 999.0 MHz (8 meter waves)

8.3.6 Store channels manually

When the RADDY RF919 is working, select the target frequency as described in chapter 8.3.4 “Search for active stations” on page 29.

- Long press [] for 2 seconds. “CH***” flashes on the primary screen, with “***” being the current channel. Short press [] or [] to choose a channel number for storing channels (or the number of the channel that should be replaced). Short press [] again to confirm storage at the selected channel.
- Long press [] for 2 seconds. “CH***” flashes on the primary screen, with “***” being the current channel. Using short keypresses of the numerical keyboard [] to input the channel number. Short press [] again to confirm storage at the selected channel.

8.3.7 Recall previously stored channels

Recalling channels is done similar to storing them as described in chapter 8.3.4.3 “Search and store active radio stations using the SCAN-key” on page 30 and 8.3.6 ”Store channels manually” on page 31.

- Short press [] to enter the mode for recalling a previously stored channel. When “ CH ***” appears on the primary screen, with “***” being the current channel., short press [] or [] to select a channel number.
- You can also directly enter a valid channel number using the numerical keyboard [], and then confirm your input with the [EN] key. If the entered channel number is not valid, the primary screen will display “NULL”.

- To exit this mode, short press the [PRESET] key and the main screen LCD "PRESET" label disappears to indicate that the mode for recalling previously stored channels is no longer active.

8.3.8 Delete channels

To delete a channel that is no longer needed, select that channel as described in chapter 8.3.7 "Recall previously stored channels" on page 31, long press [DEL], then "DEL" appears on the primary screen to indicate that the channel has been successfully deleted.

8.3.9 Weather Band of North America

Weather Band (WB) is a service provided in North America only. Weather forecasts from their regional National Weather Service station are broadcasted 24 hours a day. The network is operated by NOAA (National Oceanic and Atmospheric Administration) and part of the Emergency Alert System. The information is repeated every three to seven minutes and updated every one to six hours. It is only available in the US.

Short press [VHF] to switch to Weather Band. Next short press [TUNE NEXT] or [TUNE PREV] or rotate the small or the big tuning knob [◎] to select the desired weather frequency channel. The following table lists the 7 available WB channels:

Channel	WX Channel	Frequency	Marine Channel
1	WX2	162.400 MHz	36B
2	WX4	162.425 MHz	96B
3	WX5	162.450 MHz	37B
4	WX3	162.475 MHz	97B
5	WX6	162.500 MHz	38B
6	WX7	162.525 MHz	98B
7	WX1	162.550 MHz	39B

8.3.9.1.1 Search WB channels automatically

Whenever WB mode has been selected, long press [SCAN ATS] for 2 seconds to automatically search the WB channels. "ALE" is flashing on the primary screen. If no WB channel is found when "ALE" had been activated, again long press [SCAN ATS] for 2 seconds to exit the automatic search.

Note:	*Whenever automatic search is active, all other buttons do not work. You must use other receiving functions by long pressing [SCAN ATS] for 2 seconds to cancel automatic search.*

8.3.10 Reception settings

The RADDY RF919 is highly customizable to your specific needs regarding the internal routing of the signal received from the connected antenna. It is possible to either manually tune the antenna signal by routing it via the manual switch on the backside of the radio or by routing it via several RF channel selections. Those are:

- Attenuation with 10 or 20 dB
- HighPassFilter (HPF) for signal above 30 MHz
- LowPassFilter (LPF) for signals below 30 MHz
- LowNoiseAmplifier (LNA1) or
- Direct connection

Afterwards the signal is once more amplified by LNA2 before it gets to te input of the frequency mixing.

Long Wave (LW) and Medium Wave (MW) are directly fed to the frequency mixer.

In receive mode, long press [SETTING] to enter the setting function and enter the main menu. Rotate the outer tuning button [] clockwise or anti-clockwise to navigate to one of the parameters. Short press the tuning knob [] to enter the sub-menu. Rotate the tuning button [] clockwise or anti-clockwise to select one of the options and short press the tuning button [] to confirm your selection. "SETTING OK" appears on the primary screen.

In order to exit the reception settings when in a sub-menu, short press [SETTING] to exit or wait for about 10 seconds for automatic exit.

In order to exit the main settings menu, directly short press [SETTING] to exit or wait for about 10 seconds for automatic exit.

8.3.10.1 FM reception settings

As the FM band is above 30 MHz, only the relevant reception settings are available.

Setting parameter	Options within sub-menu
ANT-DEFAULT	Default settings for antenna signal
ANT-KEEP-PASS	Keep current antenna signal routing
ANT-CHANNEL	ANT-HPF HighPassFilter ANT-LNA 1 LNA1 channel
ANT-LNA 1-GAIN	ANT-LNA 1-GAIN-L LNA1 antenna channel low gain ANT-LNA 1-GAIN-H LNA1 antenna channel high gain
ANT-LNA2-GAIN	ANT-LNA2-GAIN-L LNA2 antenna channel low gain ANT-LNA2-GAIN-H LNA2 antenna channel high gain
ATT-GAIN	ANT- 10DB antenna attenuation 10dB ANT-20DB antenna attenuation 20dB

8.3.10.2 SW (AM) and CB reception settings

As the SW band and CB band both are below 30 MHz, only the relevant reception settings are available.

Setting parameter	Options within sub-menu
ANT-DEFAULT	Default settings for antenna signal
ANT-KEEP-PASS	Keep current antenna signal routing
ANT-CHANNEL	ANT-LPF LowPassFilter ANT-LNA 1 LNA1 channel
ANT-LNA 1-GAIN	ANT-LNA 1-GAIN-L LNA1 antenna channel low gain ANT-LNA 1-GAIN-H LNA1 antenna channel high gain
ANT-LNA2-GAIN	ANT-LNA2-GAIN-L LNA2 antenna channel low gain ANT-LNA2-GAIN-H LNA2 antenna channel high gain
ATT-GAIN	ANT- 10DB antenna attenuation 10dB ANT-20DB antenna attenuation 20dB
SQL-LEVEL	SQL-LEVEL 00-01-02-03-04-05-06-07-08-09 9 squelch levels with "00" squelch being turned off

***Note**: If the Squelch function is active, long press [ ] for 2 seconds to deactivate it. [ ] shows 0 on the primary screen. Long press [ ] for 2 seconds again, [ ] shows the recovered squelch value of current Squelch setting.*

8.3.10.3 SW (SSB), VHF and UHF reception settings

Setting parameter	Options within sub-menu
ATT-GAIN	ANT- 10DB antenna attenuation 10dB ANT-20DB antenna attenuation 20dB
SQL-LEVEL	SQL-LEVEL 00-01-02-03-04-05-06-07-08-09 9 squelch levels with "00" squelch being turned off
WT-SCAN-MODE	WT-SCAN-MODE-FREQ Frequency scanning mode using the antenna connected to the WT-socket on top of the radio. Short press [SCAN ATS] to scan for an active station until stopping the search. Press [SCAN ATS] again to stop the scan process. WT-SCAN-MODE-PRESET Scan the stored channels

***Note**: If the Squelch function is active, long press [▷II SQL] for 2 seconds to deactivate it. [VOL] shows 0 on the primary screen. Long press [▷II SQL] for 2 seconds again, [VOL] shows the recovered squelch value of current Squelch setting.*

8.3.10.4 AIR reception settings

Setting parameter	Options within sub-menu
ANT-DEFAULT	Default settings for antenna signal
ANT-KEEP-PASS	Keep current antenna signal routing
ANT-CHANNEL	ANT-HPF HighPassFilter ANT-LNA 1 LNA1 channel
ANT-LNA 1-GAIN	ANT-LNA 1-GAIN-L LNA1 antenna channel low gain ANT-LNA 1-GAIN-H LNA1 antenna channel high gain
ANT-LNA2-GAIN	ANT-LNA2-GAIN-L LNA2 antenna channel low gain ANT-LNA2-GAIN-H LNA2 antenna channel high gain
ATT-GAIN	ANT- 10DB antenna attenuation 10dB ANT-20DB antenna attenuation 20dB
SQL-LEVEL	SQL-LEVEL 00-01-02-03-04-05-06-07-08-09 9 squelch levels with "00" squelch being turned off
WT-SCAN-MODE	WT-SCAN-MODE-FREQ frequency scanning mode using the antenna connected to the WT-socket on top of the radio. Short press [SCAN ATS] to SCAN a signal station until stopping the search. Press the scan key again to stop the scan process. WT-SCAN-MODE-PRESET Scan the stored channels

***Note**: If the Squelch function is active, long press [▲] for 2 seconds to deactivate it. [▼] shows 0 on the primary screen. Long press [▲] for 2 seconds again, [▼] shows the recovered squelch value of current Squelch setting.*

8.3.11 Select bandwidth

In receive mode, short press [MENU] to select the bandwidth (BW) of every band. Short press [MENU], "BW" flashes on the primary screen. Short press [MENU], then the numbers change in turn. Wait for 2 seconds, then the final selection will become the default one.

The following table lists the possible bandwidths depending on the selected band:

LW	MW	SW (AM)	SW (SSB)	CB
1.0 kHz	1.0 kHz	1.0 kHz	0.50 kHz,	1.0 kHz
1.8 kHz	1.8 kHz	1.8 kHz	1.00 kHz,	1.8 kHz
2.0 kHz	2.0 kHz	2.0 kHz	1.20 kHz,	2.0 kHz
2.5 kHz	2.5 kHz	2.5 kHz	2.20 kHz,	2.5 kHz
3.0 kHz	3.0 kHz	3.0 kHz	3.00 kHz,	3.0 kHz
4.0 kHz	4.0 kHz	4.0 kHz	4.00 kHz	4.0 kHz
6.0 kHz	6.0 kHz	6.0 kHz		6.0 kHz

FM	AIR	VHF	WB	UHF
110 kHz	1.0 kHz	1.7 kHz	3.0 kHz	1.7 kHz
84 kHz	1.8 kHz	2.0 kHz		2.0 kHz
60 kHz	2.0 kHz	2.5 kHz		2.5 kHz
40 kHz	2.5 kHz	3.0 kHz		3.0 kHz
	3.0 kHz	3.75 kHz		3.75 kHz
	4.0 kHz	4.0 kHz		4.0 kHz
	6.0 kHz	4.25 kHz		4.25 kHz
		4.50 kHz		4.50 kHz

8.3.12 SW Demodulation types

In SW receive mode, the RADDY RF919 supports three demodulation types: AM (Amplitude Modulation), LSB (Lower Side Band) and USB (Upper Side Band).

- In SW receive mode, with normal AM demodulation being active, long press [MENU] for 2 seconds "AM" flashes on the primary screen. Now, within 2 seconds, short press [MENU] and "USB" flashes and "" will be scrolling indicating it is searching. About 2 seconds later, it will have switched to Upper Side Band (USB) demodulation.
- When USB demodulation is active, long press[MENU] for 2 seconds, then "USB" flashes. Now short press [MENU] again to switch to Lower Side Band (LSB) demodulation.
- When LSB demodulation is active, long press[MENU] for 2 seconds, then "LSB" flashes. Now short press [MENU] again to switch to normal Amplitude Modulation (AM).

8.3.13 Demodulation types of other bands

In receive mode, long press [ ], then " " flashes on the primary screen. Short press [ ] to select the demodulation type. For SW demodulation types, please see the previous chapter 8.3.12 "SW Demodulation types" on page 38. The demodulation types of all bands are listed in the following table:

FM Mode	MW Mode	SW Mode	LW Mode	WB Mode	CB Mode	AIR Mode	VHF Mode	UHF Mode
WFM (MONO)	AM	AM	AM	NFM	AM	AM	NFM	NFM
ST (STEREO)		USB						
		LSB						

9 Use of TF card

The RADDY RF919 allows to play back audio files stored on a TF card in MP3, WMA, WAV, APE or FLAC format. Up to 65,535 files may be stored on a single TF card and TF cards with up to 256 GB are supported. Besides playback of tracks, the radio also supports recording of received radio stations is MP3-format with 160 kBit/s.

9.1 Inserting a TF card

Please insert the TF card correctly into the TF card slot indicated by the "" icon. The golden fingers of the TF card need to be pointing to the left and facing towards the front of the radio. Carefully push in the TF card. Push it in once more in order to release it for removal.

Note:	*When the radio is playing music in TF card playback mode, please adjust the volume in case of sound vibration caused by the music source. When the radio is receiving in Bluetooth mode, music play fails after inserting the TF card and "0000" is displayed as the number of tracks on the primary screen, It is possibly caused by the format of the tracks source or maybe the TF card is broken. If the TF card is broken, please replace it with a new one.*

9.2 Automatic playback of tracks

If the RADDY RF919 is powered on and the normal receive mode is selected, the insertion of a TF card automatically triggers the playback of songs from the inserted TF card. The primary screen shows the TF card icon „".

Other working modes may require to short press [] in order to switch to TF card playback mode.

- Short press [] to switch between "pause" and "play"
- Short press [] to play the next track
- Short press [] to play the previous track
- Long press [] to play fast-forward
- Long press [] to play fast-backward
- Short press press [] to switch between the four playback modes.

Symbol	Function
	Repeat tracks in current folder
	Play random track
	Repeat all tracks
	Repeat current track

When TF card playback is active, rotate the internal and external tuning knob to select a song music. Short press [] to confirm your selection. You can also directly enter the valid music track number using the numerical keyboard [] and short press [EN] to start playback of the selected song.

9.3 Record on TF card

The RADDY RF919 is able to record a received audio stream MP3-encoded with 160 kBit/s on a inserted TF card. When the radio is working, insert a TF card.

Start: Long press [REC] to start recording the current audio sound. "RECORDING" flashes on the primary screen and the elapsed recording time is displayed on the secondary screen.

Stop: Long press [REC] to stop recording the current audio sound.

Playback: When in TF card playback mode (see chapter 9.2 "Automatic playback of " on page 40), long press [BAND] key to start playback of recorded tracks. Use [TUNE+ NEXT △] and [TUNE- PREV ▽] key or rotate the small or big tuning knob [◎] to navigate. Press the inner tuning knob [◎] to select the recording file to be deleted. Long press [DEL] key, "DEL" will be flashing on the primary screen. Long press [DEL] again to confirm deletion. See chapter 6.3 "Buttons surrounding the tuning knob" starting on page 17 for details.

Delete: Press [MENU] to enter TF card playback mode and select from the TF music list. Then long press the [DEL] key for two seconds. "dEL" flashes on the primary screen. Now long press the [DEL] key again to confirm the deletion of the selected recording.

> ***Notes***: *Non self-recorded tracks cannot be deleted.*

Alternatively connect the radio via USB to your PC and use the TF card reader functionality to modify the TF card content. See chapter 18 "Use as TF card reader" on page 56 for details.

10 Equalizer setting

In normal working mode, short press [] to select an equalizer setting.

Working mode / EQ	FM	MW	SW	LW	WB	CB	AIR	VHF	UHF	BT Bluetooth	TF card
EQ-NORMAL	■	■	■	■	■	■	■	■	■	■	■
EQ-POP	■					■				■	■
EQ-ROCK	■					■				■	■
EQ-JAZZ	■					■				■	■
EQ-CLASSIC	■					■				■	■
EQ-COUNTRY	■					■				■	■
EQ-NEWS	■	■	■	■	■	■	■	■	■	■	■
EQ -VOICE	■	■	■	■	■	■	■	■	■	■	■
DAC-ANALOG	■	■	■	■	■	■	■	■	■		
EQ -CW		■	■	■		■		■	■		

[■] means the EQ effect is available for the selected working mode.

Note:	*NEWS filter:*	*audio filter: 150-4000 Hz*
	VOICE filter:	*audio filter: 250-2500 Hz*
	CW filter:	*audio filter: 500-1100 Hz*

11 Bluetooth mode

The Bluetooth name of the RADDY RF919 is “RF919”.

11.1 Connect via Bluetooth

When the radio is working, short press [] to switch to “bt” mode. The Bluetooth symbol “” starts flashing to indicate that the radio is waiting for a Bluetooth connection. Turn on Bluetooth on your mobile device and connect it to the RADDY RF919. After successful connection, “” is always displayed and “” flashes. Turn on the music player on the mobile device that´s connected to the radio.

- Short press [] to play the next music song on the mobile device
- Short press [] to play the previous music song on the mobile device
- Short press [] to switch between pause and play or use your mobile device to control

11.2 Disconnect from Bluetooth

To disconnect from a paired mobile device, long press [] on the.

12 Control via APP

Your RADDY RF919 may be remotely operated using the APP. However, the appropriate APP needs to be installed first.

Step	Action	Details
1	Turn on the radio	
2	Download the APP QR codes also to be found on the battery cover	Android:QR code Radio-c IOS:APP Store Radio-ct
3	Install the APP on the mobile device	 Radio-c
4	Start the APP and click [ ] in the bottom right corner to connect with “RF919-BLE”	

If you To disconnect the APP, long press [SLEEP] to turn off the radio and display the clock. Then long press [] for 2 seconds to exit the APP after the APP connection symbol [] disappears on the primary screen. You can also exit the APP in the system menu. For details, please see chapter 16 “System settings” on page 54 about how to disable the App).

12.1 The APP interface

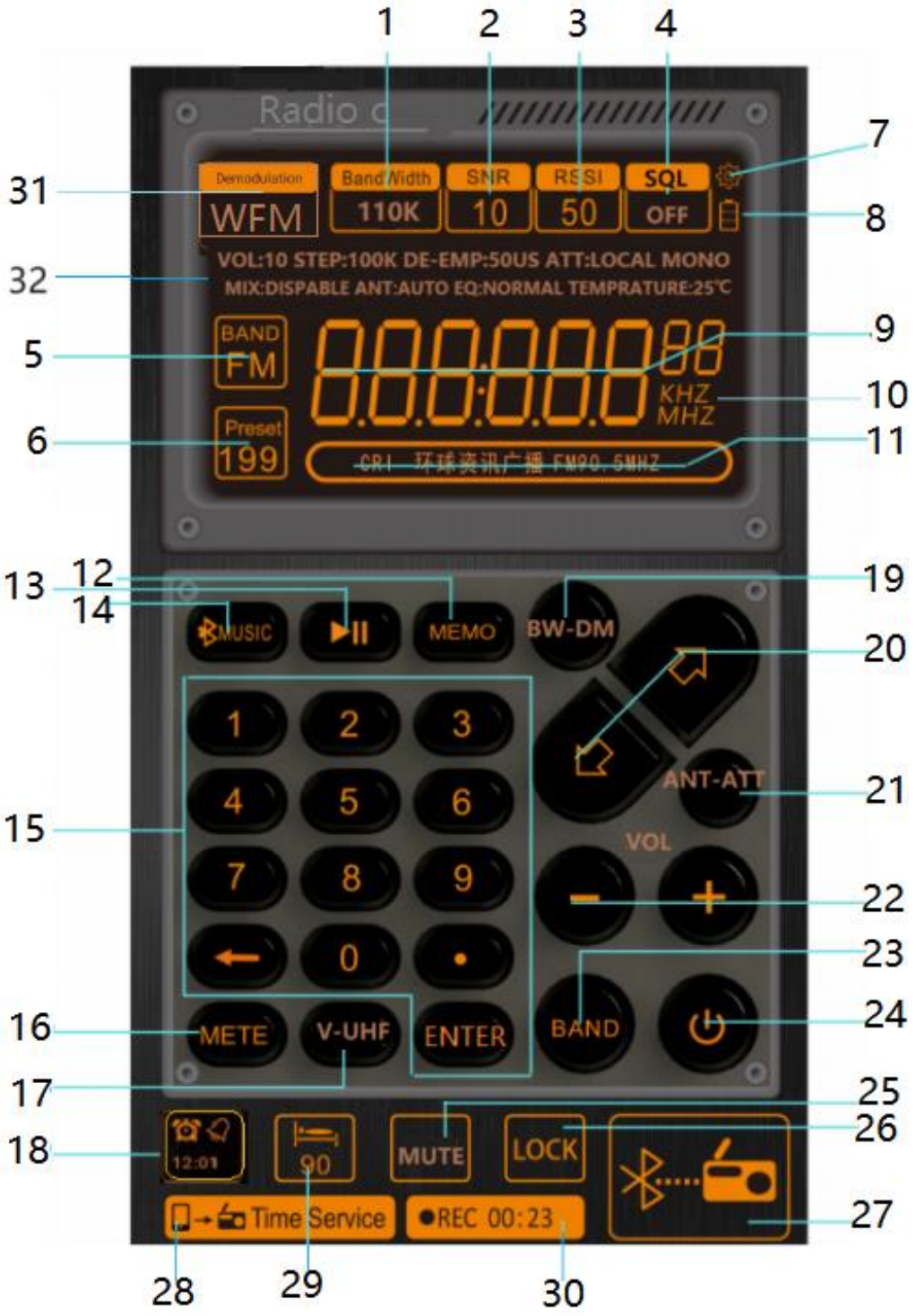

The following pages describe each field and button. Further details on the functionality are to be found starting with chapter 6 “Buttons and their functions” on page 15.

.

12.2 The APP symbols and controls

#	Icon	Meaning
1		Bandwidth setting of currently selected band
2		Signal-to-noise ratio
3		Received Signal Strength Intensity
4		In the SW, CB, AIR, VHF and UHF band mode, press [ ] to modify the squelch settings.
5		Band selection. Short press [ ] to select FM, AM, SW, AIR, CB, UHF, WB or VHF (see also #23).
6		„ “ Number of previously stored channel. Use numerical keypad to recall a specific channel and confirm numerical input with [ ]. „ “ flashing, no stored stations
7		Press [ ] to view the details on Firmware version, Model and support email address.
8		Remaining battery capacity Battery currently being charged
9		Radio Frequency display
10		Unit display
11		n.a.
12		Short press [ ] to switch to channel mode. Then use [ ] or [ ] to select a previously saved channel or use the numerical keypad to enter the channel number and confirm the input with [ ]. Long press [ ] to save the current frequency to a channel. „ “ starts flashing. Use [ ] or [ ] to select a channel. Short press [ ] to confirm storage of frequency to the selected channel.
13		Press [ ] to Play & pause

#	Icon	Meaning
14		Switch between TF card playback mode , PC mode and Bluetooth play mode ***Note**: If you need to play music in Bluetooth mode, please open the mobile phone Bluetooth connection, select "RF919" in the search list, to playback after successful connection.*
15		*Specify frequency*: Short press [ENTER], now enter the frequency using the numerical keypad [0-9] and confirm your entry with [ENTER]. *Recall channel*: enter the channel number using the numerical keypad [0-9] and confirm your entry with [ENTER]. *Select track*: enter the track number using the numerical keypad [0-9] and confirm your entry with [ENTER].
16		In SW mode, select meter wave
17		Switch between AIR, CB, WB, VHF and UHF band
18		"⏰" No alarm set, short press to activate alarm 1 "⏰" Alarm 1 is activated, short press to deactivate alarm 1 Long press [⏰]/[⏰] to modify alarm settings for alarm 1 ***Note**: Only alarm 1 can be set with the APP.*
19		Short press [BW-DM] to change the "Bandwidth" Long press [BW-DM], the current "Demodulation" type flashes, now short press [BW-DM] to change the "Demodulation" type
20		Short press [◀] or [▶] to adjust the frequency, choose a song, select a channel
21		Short press [ANT/ATT] to select the antenna attenuation
22		[−] decrease volume [+] increase volume
23		Short press [BAND] to switch between FM, SW, MW and LW (see also #5).

#	Icon	Meaning
24		• Short press [ ] to power on the radio. • Long press [ ] to power off the radio. • Disconnect APP connection: after powering off the radio is in time display mode. Now long press [ ] on the radio until "" is no longer displayed on the primary screen of the radio.
25		Long press [ ] to enable the mute function. "" symbol flashes when the device is muted. Long press [] again to unmute.
26		Long press [] to lock the operating elements of the APP. Long press [] again to unlock them.
27		Press [ ] to connect the APP with the RADDY RF919 via Bluetooth. The color of the button [] will turn orange as soon as the connection to the radio has been established.
28		Short press [ ] to align the time of the radio to the time of the connected mobile device.
29		Set sleep timer
30	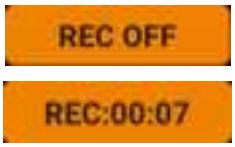	Short press [ ] to start recording of current audio stream. Short press the same button again to stop recording. During recording, the elapsed time will be displayed "" ***Note**: Recording is only possible if a TF card has been inserted in the radio.*
31		The field " " shows the current demodulation type used for the currently selected frequency band.
32		This area shows various other parameter values, such as: VOL: Current Volume STEP: Stepping value for current band DE-EMP: De-Emphasis ATT: DX, LOCAL STEREO, MONO: normally "MONO" MIX: DISABLE (not available) ANT: AUTO EQ: Equalizer setting (NORMAL, POP, ROCK, JAZZ, CLASSIC, COUNTRY) TEMPERATURE: Current temperature in °C

12.3 Operating modes

Short press on [ ] to turn off normal receiving mode and select one of the other operating modes. The most choices are available whenever the radio is connected via USB to a PC. To get back to receiving mode, short press [ ] or [ ].

TF card playback mode, PC mode and Bluetooth audio mode allow to align the sound output using the built-in equalizer. The current equalizer setting is visualized left besides the battery symbol. To align the equalizer to your needs, short press on the symbol to switch to the next setting:

Symbol	Equalizer setting
	Normal
	Pop
	Rock

Symbol	Equalizer setting
	Jazz
	Classic
	Country

12.3.1 TF card playback

TF card playback mode is only available when a TF card has been inserted in the TF card slot on the right side of the radio. To navigate within the available track use [ ] or [ ].

Left to the equalizer setting, the current playback mode is visualized according to the below table. Short press the symbol to change the playback mode.

Symbol	Setting
	Repeat all tracks
	Repeat current track

Symbol	Setting
	Repeat tracks in current folder
	Play random track

12.3.2 PC mode

Whenever the radio is connected via USB to a PC it is possible to select PC mode. When PC mode is selected and a TF card has been inserted in the TF card slot on the right side of the radio the content of the inserted TF card is shown on the PC as a separate drive. This makes it convenient to store music files onto the TF card without having to remove it from the radio.

Besides that, the radio acts as a speaker (DSP Device). All audio output of the PC may be routed to the speaker of the radio.

12.3.3 Bluetooth audio mode

In order to use the Bluetooth audio mode, a Bluetooth capable audio streaming device needs to be connected via Bluetooth to the radio. As soon as the connection is established (message “Bluetooth connected!”) you can use the normal navigation keys on your mobile device and the navigation keys [⏯], [⏭] and [⏮] on the radio to control the audio playback.

13 Use of the lock button

The slider switch on the right side of the RADDY RF919 has three positions:

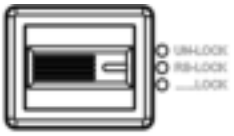

Position	Function
UN-LOCK	Radio is not locked/unlock.
RS-LOCK	Only the big and small tuning knobs are locked. “🔑” flashes on the primary screen.
……LOCK	All buttons are locked. The symbol “🔑ALL” appears on the primary screen with “ALL” flashing. Now all buttons are locked. However, it is still possible to operate the radio via the mobile APP.

14 Set current date and time

In time display mode, long press [TIME/SET] for 2 seconds to set the current time/date as follows:

Step	Action
1	On the time display state.
2	Long press the [TIME/SET] button
3	Hour digit [] is flashing
4	Turn the big/small tuning knob [ ] to adjust the hour
5	Short press [TIME/SET] button
6	Minute digit [] is flashing
7	Turn the big/small tuning knob [ ] to adjust the Minute
8	Short press [TIME/SET] button
9	Year digit [] is flashing
10	Turn the big/small tuning knob [ ] to adjust the Year
11	Short press [TIME/SET] button
12	Month digit [ ] is flashing
13	Turn the big/small tuning knob [ ] to adjust the Month
14	Short press [TIME/SET] button
15	Date digit [] is flashing
16	Turn the big/small tuning knob [ ] to adjust the Date
17	Short press [TIME/SET] button to confirm the settings

Note:	*The day of the week (MON, TUE, WED, THU, FRI, SAT and SUN) will be updated automatically according to the set date.* *The easiest way to set the date and time of the radio is by using the APP with its Time Service function* [ ] .

15 Set alarm time

After setting the current time as described in the previous chapter 14 “Set current date and time” on page 51, long press the [Alarm] key for 2 seconds to set the alarm time for ringing or automatic power on Two different sets of alarm time can be set as follows:

Step	Action
1	On the time display state.
2	Long press [ALARM] button to enter alarm setting mode
3	“ALARM 1/2 ON/OFF” will be displayed with the number indicating the alarm channel, flashing. Turn the big/small tuning knob [ ] to select the wanted alarm channel.
4	Short press [ALARM] button to confirm the selection
5	When “ON” / “OFF” is flashing, turn the big/small tuning knob [ ] to either to turn the alarm “ON” or “OFF”.
6	Short press [Alarm] button to confirm alarm activation/deactivation
7	Alarm hour digit [12] is flashing
8	Turn the big/small tuning knob [ ] to adjust alarm hour
9	Short press [Alarm] button to confirm alarm hour
10	Alarm Minute digit [37] is flashing
11	Turn the big/small tuning knob [ ] to adjust alarm minute.
12	Short press [Alarm] button to confirm alarm minute
13	Turn the big/small tuning knob [ ] to select either the radio “rAd” or a buzzer “bUZ” as alarm type
14	Short press [Alarm] button to confirm alarm type
15.1	If alarm type is “rAd”, turn the big/small tuning knob [ ] to select the duration of power-on time after timed power-on. Possible values: 10--20--30--40--50--60--70--80--90--FULL (Unit: minutes). “FULL” means the radio will not automatically shut down after automatic power on.
15.2	If alarm type is “rAd”, short press [Alarm] button to confirm power-on time
16.1	If alarm type is “bUZ”, turn the big/small tuning knob [ ] to select one of the four ring melodies: • “M 1” Bells • “M2” Nature melody • “M3” Telephone ring • “M4” Telegraph ring
16.2	If alarm type is “bUZ”, short press [Alarm] button to confirm ring melody
17	After setting the alarm clock, the corresponding alarm clock symbol " " or " " appears on the secondary display.

15.1 Turn off the alarm time

Select " 1OFF" or "2 OFF" as described at the beginning of the chapter. After selecting "OFF", the alarm clock symbol of the secondary screen will disappear.

Note:	*If scheduled power on "rAd" is selected and scheduled power off time of 10-20-30-40-50-60-70-80-90 minutes are selected, the radio will be turned off on schedule and the sleep symbol "" will appear on the secondary screen. After setting the scheduled switch-on and wake-up time, press [DISPLAY] briefly when the radio is switched on or the time is displayed to check the alarm times of "" and "".*

15.2 Confirm alarm

Whenever the alarm type is "radio", the radio will automatically turn on with its last operating mode preselected. The "sleep mode"-symbol "" is displayed on the secondary screen. A confirmation of any kind is not required. The radio will stay on if the alar duration had been set to "FULL". If it has been set to any other value, the radio will automatically turn off after the specified time.

Whenever the alarm type is "bu2", the buzzer will sound with the specified ring melody. The volume will be constantly increasing.

By pressing the inner tuning knob [], the melody will be paused for 5 minutes and the alarm symbol "" / "" displayed on the secondary screen will be flashing during that time.

Long press [ALARM] to confirm the alarm. The alarm is confirmed for now, but will again sound the next day at the very same time.

16 System settings

In time mode, long press [SETTING] to set functions. After entering the main menu there are the following options:

- Rotate the big tuning knob [] clockwise or anti-clockwise to select the sub menu
- After selecting the sub menu, press the tuning knob [] to confirm for sub-menu selection
- Rotate the big tuning knob [] clockwise or anti-clockwise to select the parameter to change
- Short press the tuning knob [] to confirm the setting
- In case of no operation within 10 seconds, the last selection made is automatically confirmed

Main menu	Sub-menu options
A-LCDSETTING	*Set the backlight color/light on time of the primary screen* TIME SET 05-S/06-S/07-S/08-S...30-S/FULL Rotate the tuning knob [] to select the time. "FULL" means the backlight of the primary screen is always on. After selection, the lower left corner of the primary screen will display " ". Short press the tuning knob [] to set the backlight color of the primary screen: COLOUR SET 1...7 There are seven colours to choose from: • Fresh grass green • Elegant brown • Soft blue • Light green • Pure light blue • Luxury purple • Joyful yellow
B-LCDSETTING	*Set the light on time of the secondary screen* TIME SET 05-S/06-S/07-S/08-S...30-S/FULL The time unit is "s". Rotate the tuning knob [] to select the time. "FULL" means the backlight of the secondary screen is always on. After selection, the lower left corner of the primary screen will show " ".

Main menu	Sub-menu options
C-KEY SETTING	*Set the light on time in working state* TIME SET 05-S/ 06-S/ 07-S/ 08-S/ 30-S/ FULL Rotate the tuning knob [] to select the time. ”FULL” means the backlight of the keys is always on. In case of no operation within 10 seconds, the final choice will be confirmed automatically. Time display will be recovered.
APP ENABLE	*Connect/disconnect APP* APP DISABLE APP doesn’t work (this might be helpful for power saving and interference reduction) APP ENABLE APP works normally
TONE ENABLE	Starting with firmware V1.706, the Morse-code confirmation tones may be turned off. Whenever the radio is powered ON a short Morse-code (“CQ”) may be heard whereas when powered OFF a short Morse-code (“QRT”) may be heard as confirmation. TONE ENABLE Morse-code confirmation during power ON/OFF TONE DISABLE No Morse-code confirmation during power ON/OFF
TIMER OFF	*Display/off of the primary screen* TIMER DISPLAY The time display of the primary screen is always on TIMER OFF The time display of the primary screen will be off whenever the backlight is off.
MUTE	This feature requires at least firmware V1.706 MUTE ENABLE Mute speaker during tuning MUTE DISABLE Unmute speaker during tuning
SYSTEM RESET	YES Perform Factory data reset NO Factory data reset is abandoned
VERSION-***	Show firmware version number

17 USB Type-C charging

This product has overvoltage protection function in charging. The maximum charging voltage is 6.2V. Please use the charging device with an output voltage of 5V DC @ 1...3A to power the radio for charging its batteries. If the RADDY RF919 is not in use for a long time, please charge it once a month or remove both batteries.

Insert the USB cable into the socket on the right side of the radio. "" appears on the primary screen and the charging indication symbol "" flashes to indicate that it is charging the batteries. When the batteries are fully charged, "" appears and stops flashing. The charging time is normally about 4-5 hours.

18 Use as TF card reader

When the TF card is inserted into the radio, connect the radio to the computer using a USB cable for file transmission and deletion of files in the TF card. The radio needs to be turned on and PC mode ("PC") needs to be selected.

19 AUX input

When the RADDY RF919 is turned on, connect the output of your external device (such as mobile phone or computer) via a 3.5mm TRS jack to the "AUX•" - input on the right side of the RADDY RF919. "AUX" appears on the primary screen, and the signal applied to the "AUX•" input will be heard on the built-in speaker of your radio.

***Note**: The RADDY RF919 does not come with any additional 3.5mm audio cable.*

20 Temperature display

Short press [SETTING] to display the current temperature value "" in the upper left of the primary screen. Short press [SETTING] again to exit the temperature display. The measured unit is fixed to °C (Celsius).

21 Firmware update

It is possible to update the internal operating system (firmware) of the radio. Whenever an update becomes available, we will publish those on our support page (More details to be found in chapter 30 “Where to find support material” starting on page 74).

In general, an update of the radio-firmware should only be done if it is really required, following the golden rule

‘**If it isn´t broken, don´t fix it!**’.

Notes: All Firmware updates for the the RADDY RF919 do come with official RADDY ‘Release Notes’. Please do not share any archives within social media groups. Never use any firmware that you have not downloaded from our official website https://iraddy.com/ .

Please carefully read our ‘Release Notes’,
then decide if the update is of added value for your personal needs
before starting to update your radio.

Therefore, first check which firmware version your RADDY RF919 has. With the radio switched off and in time display mode, press and hold [ ] and select "VERSION" by turning the inner or outer tuning knob [ ]. The firmware version currently installed on the radio is then shown on the primary display.

For further details, see chapter 16 “System settings” starting on page 54.

Only carry out an update if the new version number is higher than the version number now displayed on the radio. Details on the firmware release versions can also be found in chapter 22 “Firmware Release Notes” starting on page 64.

21.1 What is needed

21.1.1 microSD/flash card with no more than 64GB

You need a microSD/flash card with no more than 64GB of capacity. Format the card using your PC. The type of format should be FAT32 or exFAT. The update will not work if the card has been formatted using NTFS or any other format type.

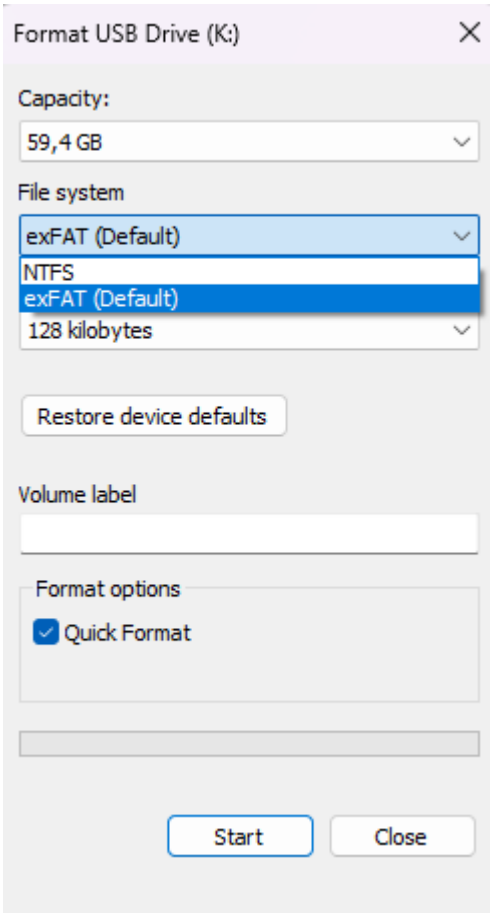

Note: It is extremely important to give the microSD/flash card a fresh format. Using a card that had been formatted sometime in the past and been used for storing files already will very likely cause the later update process to fail and brick your radio.

21.1.2 Download firmware update archive

Next, download the firmware update archive from our support area (More details to be found in chapter 30 “Where to find support material” on page 74). Normally you will find the downloaded file in the current users download folder, such as:

21.1.3 unzip archive

The downloaded file comes with an extension of ‘.ZIP’. Such files are packed archives that normally contain various files and need to be unpacked first. Look

at it like the box your radio came with. It did contain the radio and various accessories. Our update archives are very similar to that. They contain so called 'Release Notes' that list all the details that should be known for the new firmware. Often those archives also do contain directions on how to perform the update. And of course, they do contain the actual firmware file required to update the radio.

If you are afraid of updating your radio or not experienced in such, please ask a more experienced person for help. Often young kids know best how to perform such actions.

In order to get to the actual files, you need to unpack the archive first. The process is called 'unZip an archive'. Most operating systems do allow to unpack ZIP-archives. If that does not work for you, install 7-ZIP on your PC. You get 7-ZIP for free at: https://www.7-zip.org/download.html.

If you are using a Windows PC, you very likely will require the 64-bit Windows x64 version (1). macOS users very likely need the macOS version (2). Linux-users take the one that matches to their computer architecture (3).

21.1.4 Content of archive

After you did unpack the archive you will find files, similar to the ones listed below.

Filename	Content
ReadMe1st.txt	Plain text file that should be read first
2099-99-99 Release notes - RADDY RF919 Firmware update V1.706.pdf	Release Notes to be read before performing the firmware update
RF919.upd	Firmware update file

We advise all customers to read the Release Notes first and only after reading decide if a firmware update of the radio is really required. The firmware update has to be done exactly as described. If not followed by the word, you may end up with a bricked radio that is not covered by any warranty.

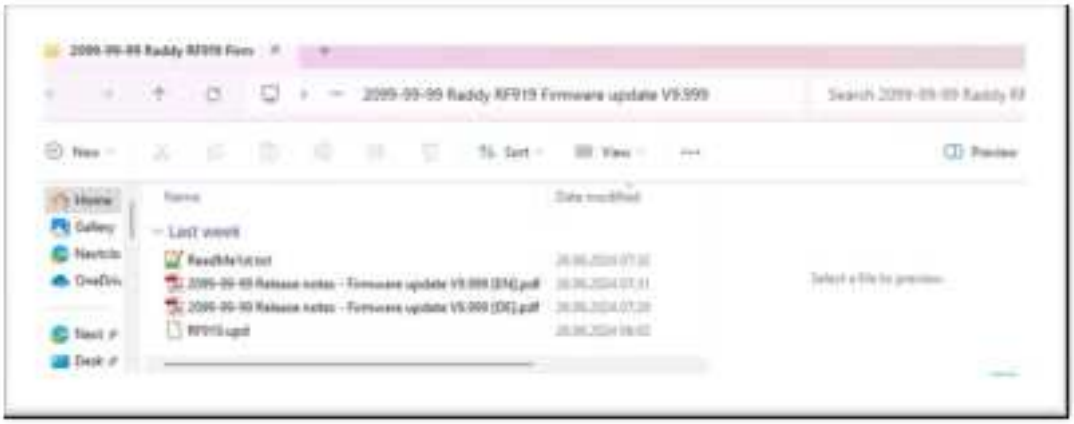

21.1.5 Copy firmware update to microSD/flash card

Copy only the file “RF919.upd” to the microSD/flash card.

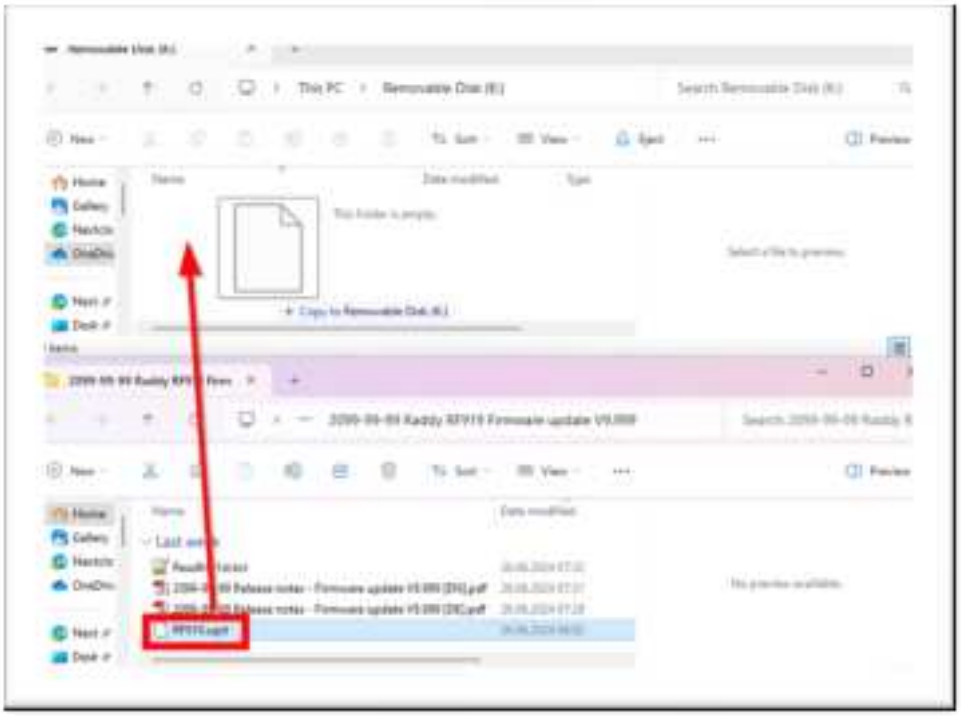

The update process does require a file with exactly that name.

21.1.6 Make sure that the radio has sufficient power

Make sure that the radio battery is fully charged or, even better, connect the radio via USB-C to an external power supply. Make sure the radio is powered off.

21.2 Perform update

21.2.1 Insert the microSD/flash card

Insert the prepared microSD/flash card into the memory slot of the RADDY RF919 as described in chapter 9.1 “Inserting a TF card” on page 40. The golden

fingers of the microSD/flash card have to be facing towards the front of the RADDY RF919.

21.2.2 Power on the radio

Turn on the radio, using the [SLEEP ⏻] key. Next select playback-mode using the [🖭] key. As soon as playback-mode has been activated, the primary display will output "00:00" for about a second. Then the primary display will change to "UPd" to indicate that a firmware update is being performed.

ATTENTION:	*Under no circumstances, remove the microSD/flash card from the RADDY RF919 or disconnect the radio from its external power supply during the update. Also do not press any keys on the radio. The update process will take a about 10 seconds.*

21.2.3 Confirmation of update and restart of radio

After the upgrade has finished, you will hear a short two-tone confirmation sound and the radio will reset to its default settings.

Very important:	*Do not operate any button during the upgrade process or disconnect the power supply, otherwise the radio will become a "brick". Such is not covered by our warranty!*

21.3 Check if update has been successful

With the radio still being powered off and in time display mode, long press [ ] and select "VERSION" by turning the inner or outer tuning knob [ ] to check that the radio is now running on the new firmware version.

For more details see chapter 16 "System settings" starting on page 54.

21.3.1 Remove microSD/flash card

If the update has been successful, you can now remove the microSD/flash card from the radio.

22 Firmware Release Notes

This chapter lists all firmware versions yet published including their corresponding Release Notes.

22.1.1 V1.706 as of June 26th 2024

Version	Changes	Released
V1.706	• In normal time display mode, long press of [DISPLAY] to turn off the time display and backlight of the primary and secondary screen • Lowest volume level has been slightly reduced • New system setting “MUTE” • New system setting “TONE” • List of free citizen channels has been enhanced and updated	2024/06/26

22.1.2 V1.689 as of April 2nd 2024

Version	Changes	Released
V1.689	• This is the initial version	2024/04/02

23 Use of antennas

When listening to SW, CB, FM, AIR, VHF, WB or UHF, pull out the extendable rod antenna of the RADDY RF919 and align its length for best reception. Try different directions and find a position with the best receiving effect.

Tip:	*Shorten the extendable rod antenna if the received signal is distorted by very strong radio interference, resulting in crosstalk.*

The below block diagram is intended as a reference to the building blocks of the RADDY RF919 as seen from a technical point of view.

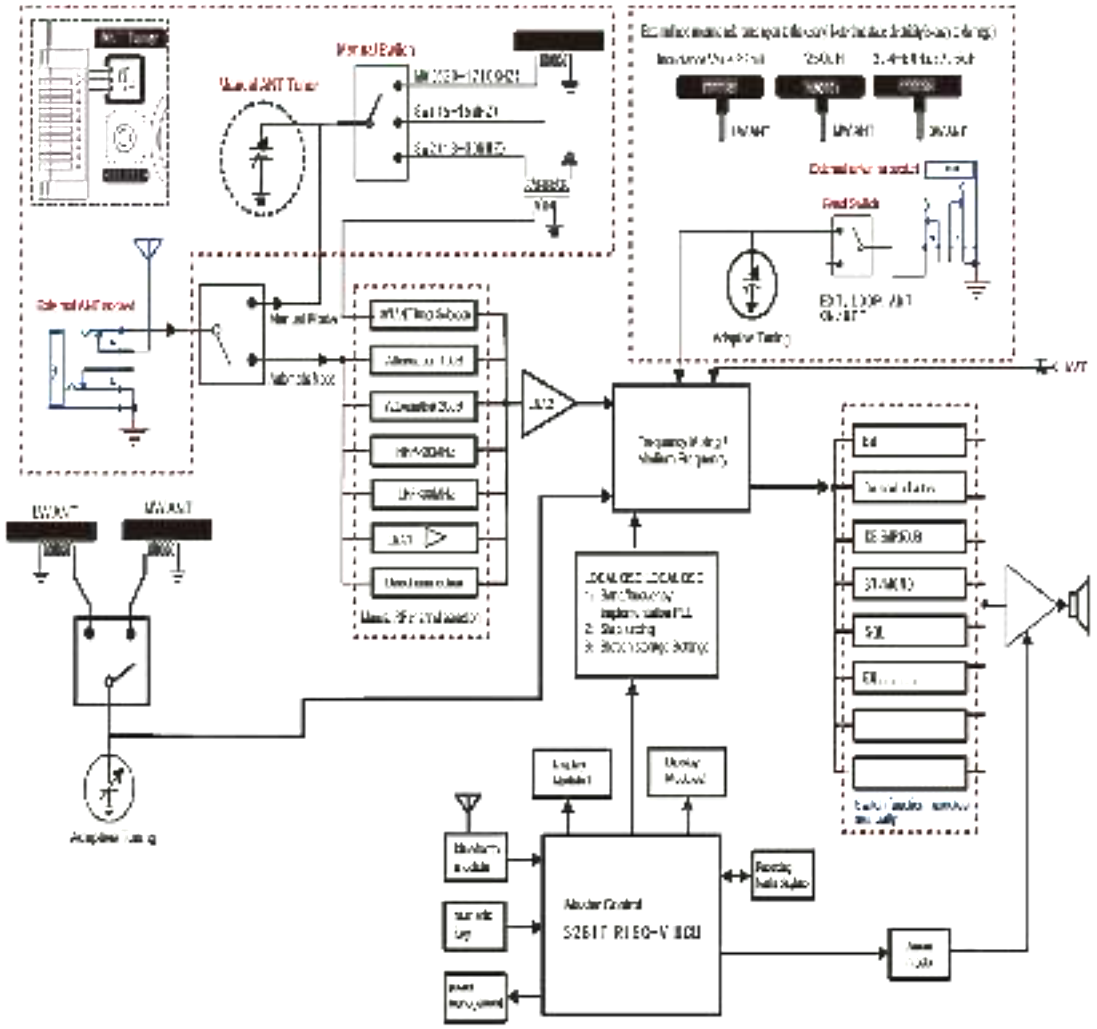

23.1 Built-in magnetic antenna

The RADDY RF919 uses a built-in magnetic antenna to receive medium wave MW and long wave LW. This magnetic antenna has a certain direction when receiving signals. So, when listening to medium wave & long wave, rotate the body direction of the radio appropriately, to find the best position to receive the signal.

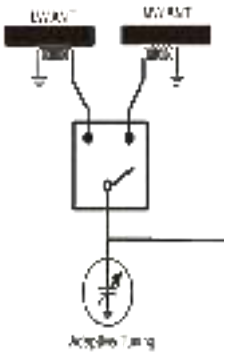

23.2 Receiving operating mode

When in radio receive mode, short press [DISPLAY] to turn the signal-to-noise ratio (SNR) and Received Signal Strength Indicator (RSSI) on the secondary screen on or off.

23.2.1 External antenna sockets

The RADDY RF919 has a total of three external antenna connectors. The following table provides their details:

Connector	purpose	Where to find	# in picture
3.5 mm TRS	MW, SW	Backside of radio	1
3.5 mm TRS	LW, MW, SW	Top of radio	2
SMA-m	Walky-Talky bands	Top of radio	3

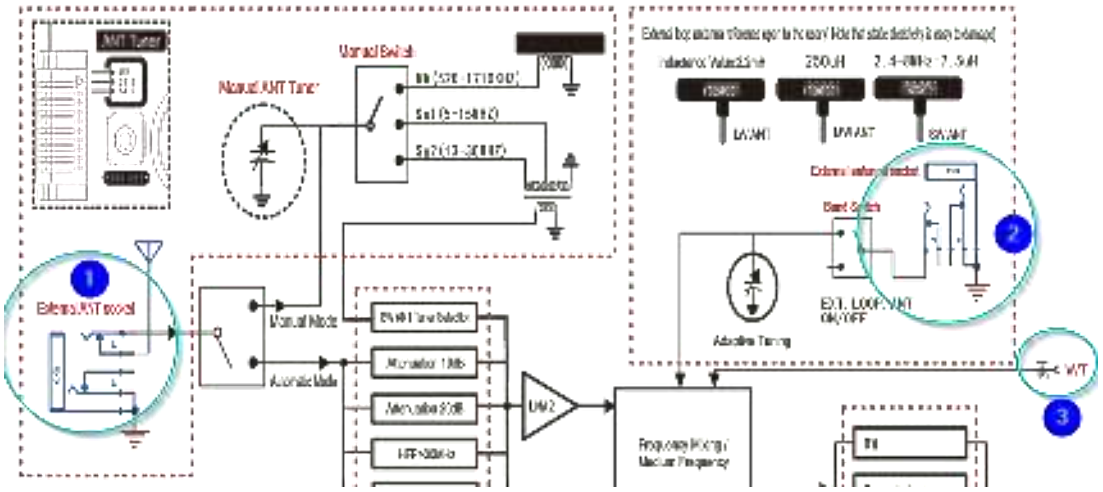

More on those antenna connectors is to be found in the corresponding chapters 6.6 “Switch and socket on the back side of the radio” on page 20 and 6.7 “Buttons and sockets on the top side of the radio” on page 21. The sockets need to be selected via the reception settings. See chapter 8.3.10 “Reception settings” on page 33 for details on those.

24 Frequencies of some stations

24.1 Shortwave stations

Country	Frequency (kHz)	Modulation
AUSTRALIA	2310, 2325, 2485, 4835, 4910, 5025, 5995, 6020, 6080, 7240, 9475, 9560, 9580, 9590, 9660, 9710, 11650, 11880, 12080, 13630, 13670, 15160, 15230, 15240, 15515, 17715, 17750, 17775, 17785, 17795, 21725	AM
AUSTRIA	5945, 6155, 7325, 9870, 13675, 13730	AM
CANADA	9610, 9755, 9770, 13650, 15365, 17740	AM
CHINA	5960, 5990, 6005, 6020, 6040, 6080, 6115, 6190, 7285, 9570, 9580, 9690, 9730, 9785, 9790, 9870, 11885, 11900, 11970, 13675, 13740, 15230, 15240	AM
CZECH REP	5930, 6200, 7345, 7385, 9400, 9430, 9435, 9890, 9955, 11600, 13580, 15710	AM
FRANCE	5920, 7315, 9720, 9765, 9805, 9865, 11615, 11725, 13680, 11995, 15160, 15275, 15605, 21620	AM
GERMANY	5905, 6140, 6180, 7225, 7240, 7280, 7285, 9565, 9735, 9755, 11690, 12045, 15275	AM
GREECE	7475, 9420, 9935, 12105, 15630, 17525	AM
ITALY	5965, 6010, 6035, 6090, 6120, 7170, 9760, 11800	AM
POLAND	7130, 9525	AM
SPAIN	6055, 6125, 9680, 11625, 11680	AM
SWEDEN	6010, 7420, 11550, 15240	AM
TURKEY	5960, 6020, 6055, 7240, 9525, 11735, 12035	AM
UKRAINE	5820, 5830, 9925	AM
U K	5875, 5975, 6005, 6040, 6130, 6195, 7130, 7160, 7320, 9410, 9480, 9660, 9740, 9750, 11675, 11750, 11765, 11920, 12095, 15105, 15285, 15360, 15400, 15575, 17640, 17830, 17885, 21470	AM
UNITED NATIONS	9565, 17810	AM
USA	4319, 5446.5, 5765, 6350, 7811.5, 10320, 12133.5, 12759, 13362	USB
USA	4930, 4960, 5960, 6080, 6105, 6110, 7125, 7175, 7205, 7405, 9645, 9760, 9785, 9885, 11655, 11885, 11890, 11975, 12015, 12150, 13600, 13640, 13710, 13735, 13755, 15150, 15185, 15205, 15290, 15445, 15580, 17640, 17715, 17730, 17895	AM
USA	5110, 9330, 18910	LSB

24.2 Free communication channels

In receive mode, short press [VHF UHF] to switch to UHF. Next long press [ENTER] to enter free communication channel mode. Now short press [ENTER] to switch between the free communication frequencies of China, Europe and North America. Selecting one of the prestored channels is done using the inner or outer tuning knob [◉]. Alternatively, this can also be established by using the [TUNE NEXT ▲] and [TUNE PREV ▽] keys.

24.2.1 GMRS/FRS frequencies

The Family Radio Service (FRS) has been available in the US since 1996 (later also in Canada and Mexico due to its popularity). In Europe, it is comparable to Freenet, PMR radio (PMR446) or SRD radio (formerly LPD) and in China it is comparable to PRS409.

The General Mobile Radio Service (GMRS) is a mobile UHF 2-way radio service in the US that requires users to obtain a license. The below frequency chart also applies to FRS, as GMRS and FRS use the same frequencies and thus, can communicate with each other. All 30 channels are supported by the free communication channel mode as described in chapter 24.2 „Free communication channels“ on page 68 whenever „FRS--USA“ has been selected using the [ENTER] key.

Channel	Frequency	Channel	Frequency
1	462.5625 MHz	16	462.5750 MHz
2	462.5875 MHz	17	462.6000 MHz
3	462.6125 MHz	18	462.6250 MHz
4	462.6375 MHz	19	462.6500 MHz
5	462.6625 MHz	20	462.6750 MHz
6	462.6875 MHz	21	462.7000 MHz
7	462.7125 MHz	22	462.7250 MHz
8	467.5625 MHz	15RP	467.5500 MHz
9	467.5875 MHz	16RP	467.5750 MHz
10	467.6125 MHz	17RP	467.6000 MHz
11	467.6375 MHz	18RP	467.6250 MHz
12	467.6625 MHz	19RP	467.6500 MHz
13	467.6875 MHz	20RP	467.6750 MHz
14	467.7125 MHz	21RP	467.7000 MHz
15	462.5500 MHz	22RP	467.7250 MHz

24.2.2 PMR446 frequencies

PMR446, often referred to simply as PMR (short for Personal Mobile Radio, Private Mobile Radio or Professional Mobile Radio), is an everyman radio application (in Germany since 1999) to which the UHF frequency range 446.000-446.200 MHz is allocated. PMR446 is the European equivalent of the US GMRS/FRS and China has its PRS409. All 16 channels are supported by the free communication channel mode as described in chapter 24.2 „Free communication channels“ on page 68 whenever „PMR--EUR“ has been selected using the [⚙] key.

Channel	Frequency
1	446.00625 MHz
2	446.01875 MHz
3	446.03125 MHz
4	446.04375 MHz
5	446.05625 MHz
6	446.06875 MHz
7	446.08125 MHz
8	446.09375 MHz

Channel	Frequency
9	446.10625 MHz
10	446.11875 MHz
11	446.13125 MHz
12	446.14375 MHz
13	446.15625 MHz
14	446.16875 MHz
15	446.18125 MHz
16	446.19375 MHz

24.2.3 PRS409 frequencies

PRS409, often also referred to as just PRS (short for Public Radio Service) is a license free radio service similar to FRS/GMRS in North America and PMR446 in Europe. All 20 channels are supported by the free communication channel mode as described in chapter 24.2 „Free communication channels“ on page 68 whenever „PRS--CHN“ has been selected using the [⚙] key.

Channel	Frequency
1	409.7500 MHz
2	409.7625 MHz
3	409.7750 MHz
4	409.7875 MHz
5	409.8000 MHz
6	409.8125 MHz
7	409.8250 MHz
8	409.8375 MHz
9	409.8500 MHz
10	409.8625 MHz

Channel	Frequency
11	409.8750 MHz
12	409.8875 MHz
13	409.9000 MHz
14	409.9125 MHz
15	409.9250 MHz
16	409.9375 MHz
17	409.9500 MHz
18	409.9625 MHz
19	409.9750 MHz
20	409.9875 MHz

25 Cleaning and maintenance

To clean the RADDY RF919 use a dry cotton cloth and the brush that comes with the radio to remove any dust from the radio.

In case it is required to exchange the two 18650 style rechargeable battery cells use the supplied screwdriver to open the battery compartment and exchange the batteries. Close the battery compartment and charge the new batteries.

26 Safety tips

Please comply with the following safety tips to use the RADDY RF919, ensuring safe and reliable use.

- Read and know all safety instructions and information on the correct usage of the RADDY RF919.
- A flashing battery symbol " " displayed in the bottom right corner of the primary screen indicates that the battery is almost empty. Please charge the battery as soon as possible to ensure normal use.
- Please use a charger with an output voltage of 5V DC @1A-3A to charge the battery to avoid any damage of the battery or the device.
- If the radio is not in use for a long time, please charge it once a month.
- Keep the radio away from rainwater and damp. Do not drop or splash any liquid onto the product.
- Keep the radio away from high-temperature heat source.
- Avoid direct sunlight for a long time.

27 Common problems and how to solve them

The following table list questions of our customers and our corresponding answers.

Problem	Solution
Radio is not identified by the PC although connected via USB.	Make sure to use a data cable for the USB-connection. A Power cable only routes the power lines.
A want to listen to a CB station transmitting in LSB mode but CB band only supports AM demodulation.	Select SW radio mode and set the demodulation type to AM, LSB or USB.
A want to listen to a CB station transmitting in FM mode but CB band only supports AM demodulation.	Select VHF radio mode to listen to a FM station in CB band.
Is it possible to switch off the 'peep' by press the keys?	The volume of the key beep is preset by the factory to a bare minimum and not user selectable.
Is there a possibility to adjust the main display for permanent Illumination?	Permanent illumination is possible via the system settings menu ("A-LCD SETTING" and "B-LCD SETTING").
Is the battery replaceable?	The batteries are replaceable.
Will the Bluetooth transmit to earbuds?	No, but it is possible to have the radio act as a Bluetooth speaker.
Can the firmware be updated to correct any bugs?	The radio supports firmware upgrades, but the process must be handled with caution to avoid bricking the device.
Is the radio PC programmable for managing the 1600 channels?	Unlike amateur handheld radios, the RADDY RF919 does not support PC programming.

28 Technical specifications

28.1 General specifications

Parameter	Value
Speaker	3 inch, 3Ω, 20W
Number of channels stored	1,600
Bluetooth version	V5.1
Bluetooth receiving distance	≤ 20m
Min operating voltage	3.5V
Batteries	2 * 3.7V LiIon 2500mAh each
External input voltage	5V DC @ 1...3A
TF card supports	Up to 256 GB
TF card file formats	MP3, WMA, WAV, APE and FLAC
Product dimension	170mm * 190mm * 85mm
Net weight	1,090g (including two batteries)

28.2 Covered frequency ranges

Band	Frequency range	Demodulation mode	Receiving sensitivity	Description
LW	153-522 kHz	AM	1mV/m	LW BAND
MW	520-1710 kHz	AM	1mV/m	MW BAND
SW	2.30-30.00 MHz	AM/LSB/USB	20μV	SW BAND
CB	25-28 MHz	AM	10dBμV	CITIZEN BAND
FM	64-108 MHz	WFM/ST	2μV	FM BAND
AIR	118-138 MHz	AM	1μV	AIR BAND
VHF	20-250 MHz	NFM	-9dBμV	VHF
WB	162.40-162.55 MHz	NFM	-9dBμV	Weather Band
UHF	250.00-999.00 MHz	NFM	-9dBμV	UHF

29 Certification

The RADDY RF919 is:

- FCC Part 15 Subpart C certified with FCC ID: 2APU9-HRD-C919
- CE approved and verified to Radio Equipment Directive 2014/53 EU
- Conformant to ETSI EN 303 345-1 V1.1.1:2019-06 (“Broadcast Sound Receivers; Part 1: Generic requirements and measuring methods”)
- Conformant to ETSI EN 303 345-2 V1.2.1 (2021/12) (“Broadcast Sound Receivers; Part 2: AM broadcast sound service; Harmonised Standard for access to radio spectrum”)
- Conformant to ETSI EN 303 345-3 V1.1.1;2021-06 (“Broadcast Sound Receivers; Part 3: FM broadcast sound service; Harmonised Standard for access to radio spectrum”)
- Conformant to ETSI EN 300 328 V2.2.2 (2019-07) (“Wideband transmission systems; Data transmission equipment operating in the 2,4 GHz band; Harmonised Standard for access to radio spectrum”)
- Conformant to ETSI EN 301 489-1 V 2.2.3 (2019-11) (“ElectroMagnetic Compatibility (EMC) standard for radio equipment and services; Part 1: Common technical requirements; Harmonised Standard for ElectroMagnetic Compatibility”)
- Conformant to ETSI EN 301 489-17 V3.2.4 (2020-09) (“ElectroMagnetic Compatibility (EMC) standard for radio equipment and services; Part 17: Specific conditions for Broadband Data Transmission Systems; Harmonised Standard for ElectroMagnetic Compatibility”)
- Conformant to EN 55032:2015+A11:2020 (“Electromagnetic compatibility of multimedia equipment. Emission requirements”)
- Conformant to EN 55035:2017+A11:2020 (“Electromagnetic compatibility of multimedia equipment. Immunity requirements”)
- Conformant to EN IEC 61000-3-2:2019+A1:2021 (“Electromagnetic compatibility (EMC) Limits. Limits for harmonic current emissions (equipment input current 16 A per phase))
- Conformant to ETSI EN 300 328 V2.2.2 (2019-07) (“Wideband transmission systems; Data transmission equipment operating in the 2,4 GHz band; Harmonised Standard for access to radio spectrum”)
- Conformant to EN 61000-3-3:2013+A2:2021+AC:2022 (“Electromagnetic compatibility (EMC) Limits. Limitation of voltage changes, voltage fluctuations and flicker in public low-voltage supply systems, for equipment with rated current ≤ 16 A per phase and not subject to conditional connection”)
- Conformant to EN 62368-1:2014+A11:2017 (“Audio/video, information and communication technology equipment - Part 1: Safety requirements (IEC 62368-1:2014, modified”)
- Conformant to EN 50663:2017 (“Generic standard for assessment of low power electronic and electrical equipment related to human exposure restrictions for electromagnetic fields (10 MHz - 300 GHz)”)

30 Where to find support material

Please kindly note that all the files related to the RADDY RF919 can be found in the Download area of our official website by following these steps:

https://iraddy.com → Download → click on the appropriate radio model

As for the RADDY RF 919 the resulting support page will look similar to the following:

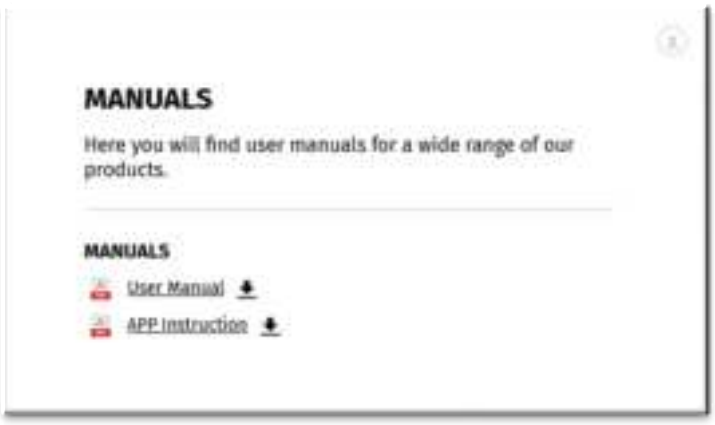

As soon as any new file becomes available, it will be published within our download area.

We would like to thank all RADDY customers for their constructive feedback.

If you do find any bug in this documentation or if you are missing a detail, you would have expected, write an email to support@iraddy.com.

Thank You for Shopping at RADDY!

FIND TUTORIALS, SUPPORT AND MORE AT:

https://iraddy.com/