RIB Building Automation

Functional Devices, Inc.
101 Commerce Drive
Sharpsville, IN 46068

Confidence & Peace of Mind in Every Box™
www.functionaldevices.com
sales@functionaldevices.com

Office: (765) 883-5538
Fax: (765) 883-7505
Toll Free: (800) 888-5538

INTELLIGENT FIELD DEVICE

RIBTW2421B-BCIP

BACnet IP Network Relay Device, One Binary Output + Override,
One Binary Input, 24 Vac/dc / 120-277 Vac Power Input, NEMA 1 Housing

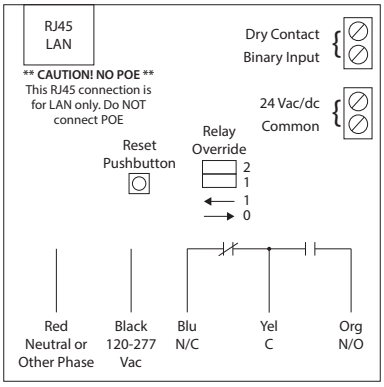

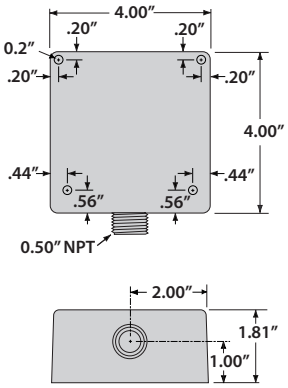

SPECIFICATIONS

 # Relays & Contact Type: One (1) SPDT Continuous Duty Coil
Expected Relay Life: 10 million cycles minimum mechanical
Operating Temperature: -30 to 140° F
Humidity Range: 5 to 95% (noncondensing)
Operate Time: 18ms
Green LED: Network Communication
Red LED: Relay Status
Yellow LED: Link Status
Blue LED: Heartbeat
Pink LED: Binary Input Status
Dimensions: 4.00"H x 4.00"W x 1.81"D with 0.50" NPT hub
Origin: Made of US and non-US parts
Wires: 16´´, 600V Rated
Approvals: CE, UL Listed, UL916, C-UL, RoHS
Housing Rating: UL Accepted for Use in Plenum, NEMA 1
Gold Flash: No
Relay Override Switch: DIP Switch Control
Network Media: Ethernet Cable

Contact Ratings:
20 Amp Resistive @ 277 Vac
20 Amp Ballast @ 277 Vac
16 Amp Electronic Ballast @ 277 Vac (N/O)
10 Amp Tungsten @ 120 Vac (N/O)
1110 VA Pilot Duty @ 277 Vac
770 VA Pilot Duty @ 120 Vac
2 HP @ 277 Vac
1 HP @ 120 Vac

Power Input Ratings:
80 mA @ 24 Vdc
135 mA @ 24 Vac
19 mA @ 120-277 Vac

Power Input:
24 Vac/dc; 120-277 Vac; 50-60 Hz

BACnet® Details:
Device ID will default to 277XXX where XXX is the decimal value of the last octet of the device's MAC address

Examples:

MAC Address –
D8:47:8F:23:97:9E
Hexadecimal 9E = Decimal 158
Device ID – 277158

MAC Address –
D8:47:8F:23:9F:20
Hexadecimal 20 = Decimal 32
Device ID – 277032

DIP SWITCHES*		RELAY STATE**
1	2	
0	1	Auto
1	X	Override on
0	0	Override off

* 0 = Open ; 1 = Closed
** Device must be powered for override

Notes:
Dry contact binary input is a general purpose input that is not tied to the relay internally. Can be used with any dry contact switching device, such as a current sensor, to report back to the network.

When connecting 24 Vac to both the RIB(s and a half-wave device, damage to device can occur.
Option 1: Use separate transformers for each device.
Option 2: Add diode between devices, see Option 2 note below. ^^

Device ID can be changed with a BACnet configuration tool or on the product's webpage via an internet browser.

This model utilizes:
BO1 (Relay output)
BI1 (Dry Contact Binary Input),
NP1 (Network Port Object)

PIC Statement available on website

See Bulletin B3703 for more information

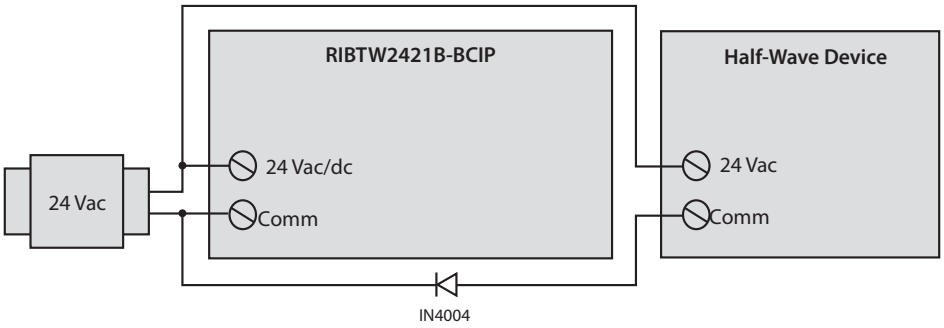

^^ Option 2: Add diode on 24 Vac power (Comm) interconnection between devices. Band on diode faces towards RIB(s).