country 4 blu

Operating & Installation Instructions

CONTENTS

QUICK GUIDE **4**

OPERATING INSTRUCTIONS **5**

FUEL 5

LIGHTING 5

CONTROLLING THE FIRE 5

REFUELLING 6

ASH CLEARANCE 6

REDUCED BURNING 6

MAINTENANCE 6

THROAT PLATE AND FLUEWAY CLEANING 7

CHIMNEY SWEEPING 7

TROUBLE SHOOTING 8

CO ALARM 8

IF YOU NEED FURTHER HELP 8

UNPACKING THE STOVE 9

HEALTH AND SAFETY PRECAUTIONS 9

CO ALARMS 9

SPECIFICATION 9

CHIMNEY 9

INSTALLATION INSTRUCTIONS **9**

HEARTH AND FIRE SURROUND 10

CONNECTIONS TO FLUES 10

SOOT DOORS 11

PRE LIGHTING CHECK 11

COMMISSIONING 11

CAA AND SMOKE CONTROL 12

DIMENSIONS **13**

PARTS LIST **14**

CERTIFICATION **15**

Ref.country4-blu v1 06.19

QUICK GUIDE

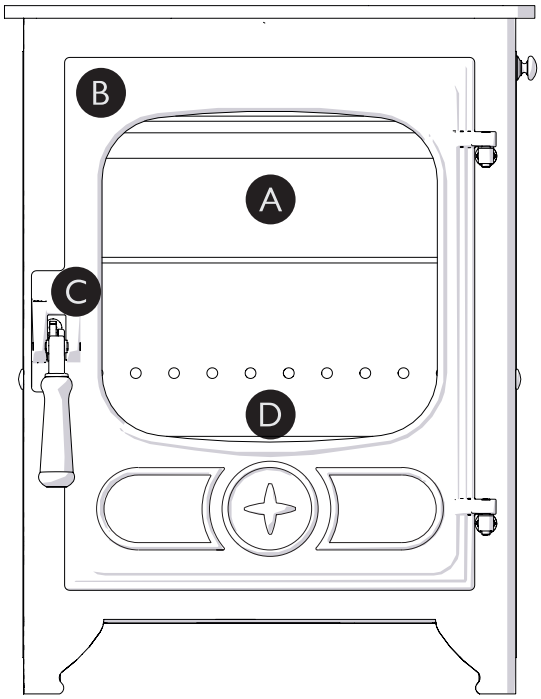

A Throat plate
Improves efficiency of stove by slowing down flue gases

B Door
Keep closed when stove is in use

C Door handle
Pull to open

D Fuel retainer
Ensure fuel does not protrude beyond retainer

MAINTENANCE AND CLEANING

GLASS	Wipe with damp, lint free cloth. Any stubborn deposits on the glass may be removed with a proprietary stove glass cleaner or ceramic hob cleaner.
THROAT PLATE & UPPER BAFFLE	Take down once a month and clean. Sweep sooty deposits into fire
CHIMNEY	Have chimney swept twice a year. Chimney can be swept through stove.
SERVICING	Stove should be serviced by a professional at least once a year.

LIGHTING AND CONTROLLING THE FIRE

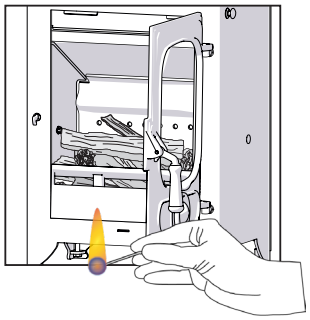

Add kindling and paper or firelighters. Keep air control fully out and close door.

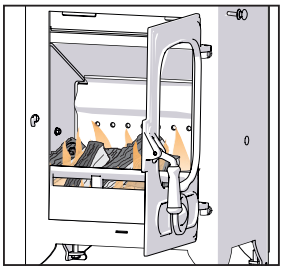

Once kindling is alight, add smaller logs. Keep air control fully out, turn the spin wheel anti - clockwise and close door.

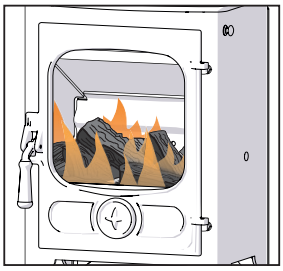

Add larger logs once fire is established. Air control can be reduced to minimum.

Suitable fuels for your Charnwood:
Wood logs

Unsuitable fuels:
Petroleum coke
Liquid fuel
Household waste
Coal singles
Small nuts or coal dust
Wet or unseasoned wood

OPERATING INSTRUCTIONS

Congratulations on becoming the owner of a Charnwood Country 4 Blu Stove. Your stove has been approved in smoke control areas to burn wood logs if it is used in accordance with these instructions. It is very important that you read and understand these instructions before using the stove.

Before lighting the stove check with the installer that the work and checks described in the Installation Instructions have been carried out correctly and that the chimney has been swept, is sound and free from any obstructions. The stove is not suitable for use in a shared flue system.

If you are using your stove to burn wood logs in a smoke controlled area, then the provided Defra Stop **MUST** be fitted and the instructions on lighting and refuelling **MUST** be followed. This stove will not produce significant smoke if well seasoned logs of less than 20% moisture content are burnt and these instructions are adhered to. Burning wet (>20% moisture content) wood and operating the stove in an irresponsible manner may produce smoke which is illegal in smoke controlled areas.

Remember that the stove will be hot and that it is made from hard materials – ensure that you have good balance before operating the fire. Always use the provided operating tool and gloves.

Do not use an aerosol spray on or near the stove when it is alight. There is a risk of explosion or flash ignition of the spray.

When using the stove in situations where children, aged and/or infirm persons are present a fireguard must be used to prevent accidental contact with the stove. The fireguard should be manufactured in accordance with BS 8423:2002.

The stove is suitable for intermittent operation.

FUEL

This stove has been designated to burn wood. Only dry well seasoned wood should be burnt on this appliance as burning wet unseasoned wood will give rise to heavy tar deposits in the stove, on the glass and within the chimney. For the same reason hard woods (such as Ash, Beech and Oak) are better than soft woods (such as Pine and Spruce). Burning wet unseasoned wood will also result in considerably reduced outputs. The wood should be cut and split and then left to season in a well ventilated dry place for at least one year but preferably two years before use.

Approximate suitable log sizes are:

225mm(10in) long and 75mm (3in) diameter

Log moisture content of less than 20% is recommended.

PETROLEUM COKE IS NOT SUITABLE FOR USE ON THIS APPLIANCE. ITS USE WILL INVALIDATE THE GUARANTEE.

This stove is not designed to burn household waste.

LIGHTING

On initial lighting, the stove may smoke and give off an odour as the silicon paint with which the firebox is painted reacts to the heat. This is normal and will cease after a short time, but meanwhile the room should be kept well ventilated.

At first only light a small fire and burn it slowly for two hours to allow any residual moisture in the chimney to evaporate.

Light the stove using dry kindling wood and paper or fire lighters. Put the paper, or fire lighters, and kindling in the firebox and cover with a few small dry logs. Open the air controls – the primary air control in the door and the airwash control - fully (see Fig. 1) Light the paper or fire lighters. The door may be left cracked open for a few minutes to assist the combustion and heat up the firebox more quickly. When the kindling wood is well alight add a few more small logs, close the door but leave the air control fully open. When the flames are established around these logs, load the stove with the required fuel load. Maintain the air control at maximum at this stage. Once the fire is up to temperature the airwash system will begin to work, so allow the fire to become hot before adjusting the air control to the required setting. During the lighting period, do not leave the stove unattended. Do not leave the door open except as directed above to avoid excessive smoke.

When relighting the stove, leave the ash on the base if burning wood, unless it is becoming too deep, in which case some of it may be removed.

CONTROLLING THE FIRE

The rate of burning and hence the output is controlled by the spin wheel and the airwash control (see Fig. 1).

The spin wheel should only be used when lighting or when rapid burning is required. It should not be left fully open for long periods as this can cause over-firing. For low burning it should be closed.

The airwash control is used most of the time to control the burning rate and to keep the glass clean. Fully extended gives full airwash for faster burning and clean glass whereas fully closed gives low burning. It will not be possible to keep the glass clean if this control is fully closed, particularly immediately after refuelling. For correct firing we recommend the use of a stove pipe thermometer which may be purchased from your supplier or from ourselves.

When the stove is hot, these controls must only be operated using the tool provided or a glove to avoid the danger of burned fingers.

Operation with the air controls open can cause excess smoke. The appliance must not be operated with air controls except as directed in the instructions. The Charnwood Country 4 Blu is provided with an air control stop to be fitted before use in a smoke control area. This stops the stove from burning too slowly.

Fig. 1 Stove controls

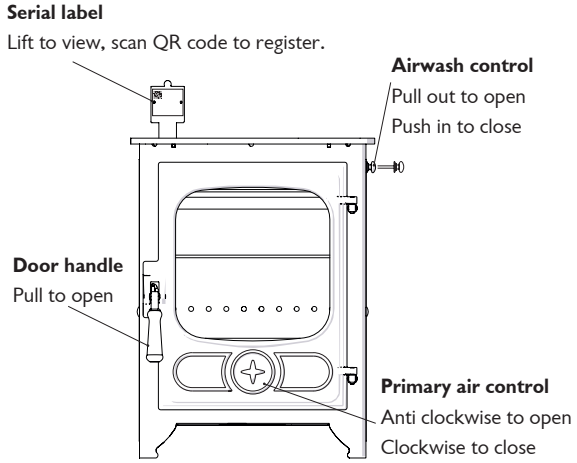

REFUELLING

Keep the firebox well filled but do not allow fuel to spill over the top of the fuel retainer.

Logs should be evenly distributed, filling the firebed to give the most pleasing flame pattern. The air control must be fully opened after refuelling until the flames are established above the fire. It is best to refuel on to a hot bed of embers. If at this point the fire starts to die, the door must be cracked open until the fire is revived. If the fire has started to die down before refuelling, then more kindling wood must be added, the air control opened fully and the door cracked open to re-establish the firebed before adding larger logs (see suitable log sizes in Fuel section). This will avoid excessive smoke emission.

Care should be taken, especially when burning wood, that fuel does not project over the fuel retainer or damage to the glass may be caused when the door is closed. It can also cause the glass to blacken up. Maximum filling height is such that logs cannot fall from the fire when the door is opened.

In smoke controlled areas do not fill the stove above the level of the air holes in the back bricks, as overloading can cause excess smoke.

Do not operate with the door left open except as directed by the instructions as this can cause excessive smoke.

ASH CLEARANCE

For optimum wood burning, it is important to leave a layer of ash around 1cm thick on the base of the stove. Before removing ash ensure that it has cooled down,

To make ash removal easier there are ash carriers available. These may be purchased from your supplier or, in case of difficulty, from Charnwood.

REDUCED BURNING

For reduced burning the fire door must be closed.

When burning wood in areas that are not smoke controlled, load some large logs on the fire and allow to burn for half an hour before closing the air control (this will help to reduce tar deposits in the chimney). Some experimentation may be necessary to find the setting most suitable for the type of fuel being used and the draw on the chimney.

MAINTENANCE

Cleaning

The stove is finished with a high temperature paint which will withstand the temperatures encountered in normal use. This may be cleaned with a damp lint-free cloth when the stove is cold. Should re-painting become necessary, high temperature paints are available from your supplier or from stove shops.

Cleaning the Glass

Most deposits on the glass may be burnt off simply by running the fire at a fast rate for a few minutes. If it becomes necessary to clean the glass then open the door and allow it to cool. Clean the glass using a damp cloth and then wiping over with a dry cloth. Any stubborn deposits on the glass may be removed with a proprietary stove glass cleaner or ceramic hob cleaner. Do not use abrasive cleaners or pads as these can scratch the surface which will weaken the glass and cause premature failure

When Not in Use

If the fire is going to be out of use for a long period (for instance in the summer) then to prevent condensation, and hence corrosion, the air control should be left fully open and the fire door left ajar. It Is also advisable to sweep the chimney and clean out the fire. Spraying the inside of the door and firebox with a light oil, such as WD40, will also help to keep all internal parts working well. After long periods where the fire has been out of use, the chimney and appliance flueways should be cleaned before lighting.

Door Seals

For the fire to operate correctly it is important that the door seals are in good condition. Check that they do not become worn or frayed and replace them when necessary.

Servicing

It is recommended that the fire is serviced once a year to keep it in first class working order. After cleaning out the firebox thoroughly, check that all internal parts are in good working order, replacing any parts that are beginning to show signs of wear. Check that the door seals are in good condition and that the doors seal correctly. A servicing guide is available on request. Repairs or modifications may only be carried out by the Manufacturer or their approved agents. Use only genuine Charnwood replacement parts.

THROAT PLATE AND FLUEWAY CLEANING

It is important that the throat plate and all the stove flueways are kept clean in order to prevent potentially dangerous fume emission. They should be cleaned at least monthly, and more frequently if necessary. It is necessary to let the fire out to carry out these operations.

To remove the lower throat plate, first remove the fuel retainer (item 'd' page 5) to allow enough room so that the throat plate clears the sides of the fire box when removed.

Slide the lower throat plate forwards so that it clears the back plate, then slide it either right or left so that the opposite side clears the retaining flange on the side plate and can be gently lowered. Any sooty deposits should then be swept from the throat plate and into the fire.

To return the lower throat plate to its correct position- At an angle, insert the throat plate so that it sits on top of either the right or left side of the retaining flange on the side plates. Raise the opposite side of the throat plate and slide so that the throat plate is central and supported by both side plates. Slide back so that the throat plate rests neatly on the top of the back plate.

The upper baffle plate rests centrally on top of the air wash tubes. The stud on the baffle plate should be located into the hole on the bracket

Fig.2 Throat Plate Location

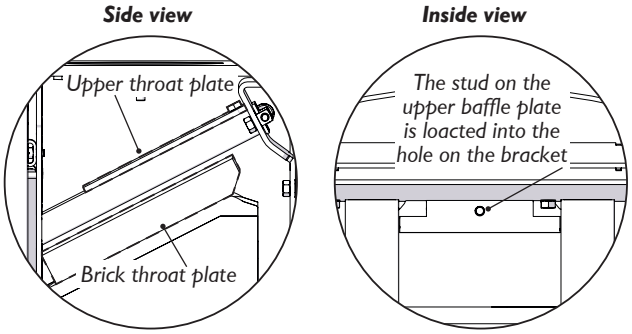

CHIMNEY SWEEPING

Where the chimney previously served an open fire, it is possible that the higher flue gas temperature from a stove may loosen soot deposits with the consequent risk of flue blockage. It is therefore recommended that the chimney be swept a second time within a month of regular use after installation.

The chimney should be swept at least twice a year. Where the top outlet or vertical rear flue connector is used it will generally be possible to sweep the chimney through the appliance.

First remove the fuel retainer and the upper and lower throat plates. Then sweep the chimney ensuring that soot is removed from all horizontal surfaces after sweeping.

In situations where it is not possible to sweep through the appliance the installer will have provided alternative means, such as a soot door. After sweeping the chimney the appliance flue outlet and the flue pipe connecting the stove to the chimney must be cleaned with a flue brush.

After clearing any soot from within the stove, replace the throat plate (see Fig. 2) and the fuel retainer.

Different types of sweep's brushes are available to suit different flueways. For prefabricated insulated chimneys the manufacturers instructions with regard to sweeping should be consulted.

TROUBLE SHOOTING

Fire Will Not Burn

Check that:

a) the air inlet is not obstructed in any way,

b) chimneys and flueways are clear,

c) a suitable fuel is being used,

d) there is an adequate air supply into the room,

e) If an extractor fan is fitted, that it is not causing lack of flue draft when operating.

f) there is sufficient draw in the chimney. Once the chimney is warm a draught reading of at least 1.25 mm (0.05 in.) water gauge (12Pa) should be obtained.

Blackening of Door Glass

Differences in chimney draughts mean that the best settings of the air controls will vary for different installations. A certain amount of experimentation may be required, however the following points should be noted and with a little care should enable the glass to be kept clean in most situations:

a) Wet or unseasoned wood, or logs overhanging the front fence will cause the glass to blacken.

b) The airwash relies on a supply of heated air to keep the glass clean, therefore, when lighting the stove allow the firebed to become well established before closing the air control. This may also be necessary when re-fuelling the stove.

c) When re-fuelling keep the fuel as far back from the front fence as possible, do not try to fit too much fuel into the firebox.

d) Do not completely close the air control.

It is always more difficult to keep the glass clean when running the stove very slowly for long periods.

If blackening of the glass still occurs check that all flue connections and the blanking plate are well sealed. It is also important that the chimney draw is sufficient and that it is not affected by down-draught. When the chimney is warm a draught reading of at least 1.25 mm (0.05 in.) water gauge (12Pa) should be obtained. Some blackening of the glass may occur below the level of the fuel retainer. This will not obscure the view of the fire or affect its performance.

Fume Emission

Warning Note: Properly installed and operated this appliance will not emit fumes. Occasional fumes from de-ashing and re-fuelling may occur. Persistent fume emission is potentially dangerous and must not be tolerated. If fume emission does persist, then the following immediate actions should be taken:

a) Open doors and windows to ventilate the room and then leave the premises.

b) Let the fire out and safely dispose of the fuel from the appliance.

c) Check for flue or chimney blockage, and clean if required.

d) Do not attempt to re-light the fire until cause of fuming has been identified, if necessary seek professional advice.

The most common cause of fume emission is flueway or chimney blockage. For your own safety these must be kept clean.

Fire blazing out of control

Check that:

a) The door is tightly closed.

b) The air control slider is fully closed.

c) A suitable fuel is being used.

d) Door seals and airwash slide are intact.

Chimney Fires

If the chimney is thoroughly and regularly swept, chimney fires should not occur. However, if a chimney fire does occur close the air control, and tightly close the door of the appliance. This should cause the chimney fire to go out in which case the controls should be kept closed until the stove has gone out. The chimney and flueways should then be cleaned. If the chimney fire does not go out when the above action is taken then the fire brigade should be called immediately. After a chimney fire the chimney should be carefully examined for any damage. Expert advice should be sought if necessary.

CO ALARM

Your installer should have fitted a CO alarm in the same room as the appliance. If the alarm sounds unexpectedly, follow the instructions given under “Warning Note” above.

IF YOU NEED FURTHER HELP

If you need further help with your Charnwood then your Installer will be able to provide the answers to most questions. Your Local Charnwood Premier Dealer has a great deal of experience and will also be able to provide helpful advice. Further help is available from the Charnwood Customer Services department who will be pleased to give advice, if necessary.

UNPACKING THE STOVE

The stove arrives fixed its pallet facing up. There must be adequate facilities for unloading and manoeuvring into position The wrapping is first removed, then the stove released from the pallet by removing the screws from the base. The stove may now be moved to its final position. The pallet is intended to be cut up and used for kindling fuel.

HEALTH AND SAFETY PRECAUTIONS

Please take care when installing the stove that the requirements of the Health and Safety at Work Act 1974 are met.

Some types of fire cement are caustic and should not be allowed to come into contact with the skin. In case of contact wash with plenty of water.

If there is a possibility of disturbing any asbestos in the course of installation then please use appropriate protective equipment.

Ideally there should not be an extractor fan fitted in the same room as the appliance. If this situation is unavoidable then specialist advice should be taken to ensure that the extractor fan does not cause the appliance to emit fumes into the room. An additional air supply correctly positioned may be necessary. It is essential to carry out a spillage test to ensure that the appliance can operate safely when the extractor fan is operating.

There must be an adequate air supply into the room in which the appliance is installed to provide combustion air. The combustion air supply must be via a permanently open vent. The requirement for minimum free area is partly dependent on the design air permeability of the house. In older properties the air permeability will be above 5.0m³/(h.m²), but in some modern properties it may be less. The vent must be positioned such that it is not liable to blockage. Minimium areas are given in the following table:

AIR PERMEABILITY $m^3/(h.m^2)$	MINIMUM VENT AREA $cm^2(in^2)$
	COUNTRY 4 BLU
>5.0	*No requirement*
<5.0	*27.5 (4.3)*

This stove is capable of intermittent operation, and is not suitable for use in a shared flue system.

In addition to these instructions the requirements of BS.8303 and BSEN 15287-1:2007 must be fulfilled. Local Authority Bylaws and Building Regulations, including those referring to national and European Standards, regarding the installation of Solid Fuel burning appliances, flues and chimneys must also be observed.

CO ALARMS

Building regulations require that whenever a new or replacement fixed solid fuel or wood/biomass appliance is installed in a dwelling a carbon monoxide alarm must be fitted in the same room as the appliance. Further guidance on the installation of the carbon monoxide alarm is available in BS EN 50292:2002 and from the alarm manufacturer's instructions. Provision of an alarm must not be considered a substitute for either installing the appliance correctly or ensuring regular servicing and maintenance of the appliance and chimney system.

SPECIFICATION

SPECIFICATION	COUNTRY 4 BLU	
Fuel	*Wood logs*	
Rated Heat Output kW (BTU/hr)	*5.0*	
Stove Weight kg (Packed)	*60kg*	
Flue Temperature °C	*221*	
Minimum Flue Draught	*12Pa*	
Flue gas Mass Flow g/s	*4.5*	
Hearth Temperature	*>100*	
Minimum distance from combustibles mm	**SIDE**	**BACK**
Without optional heat shield	480	550
With optional heat shield	480	150
The outputs in the table are based on a 45 minute re-fuelling cycle burning seasoned hardwood logs. All tests are carried out in accordance with BSEN 13240.		

CHIMNEY

In order for the appliance to perform satisfactorily the chimney height must not be less than 4 metres measured vertically from the outlet of the stove to the top of the chimney. The internal dimensions of the chimney should preferably be 150-200 mm (6"- 8") either square or round and MUST NOT BE LESS THAN 125 mm (5")

If an existing chimney is to be used it must be swept and checked, it must be in good condition, free from cracks and blockages, and

should not have an excessive cross sectional area. If it was previously used by an open fire then the chimney should be swept one month after installation to clear any soot falls which may have occurred due to the difference in combustion between the stove and the open fire. If you find that the chimney is in poor condition then expert advice should be sought regarding the necessity of having the chimney lined. If it is found necessary to line the chimney then a lining suitable for Solid Fuel must be used.

If there is no existing chimney then a prefabricated block chimney or a twin walled insulated stainless steel flue to BSEN 15287-1:2007 can be used either internally or externally. These chimneys must be fitted in accordance with the manufacturers instructions and Building Regulations.

Single wall flue pipe is suitable for connecting the stove to the chimney but is not suitable for using for the complete chimney. If it is found that there is excessive draw in the chimney then a draught stabiliser should be fitted.

It is important that there is sufficient draw in the chimney and that the chimney does not suffer from down-draught. When the chimney is warm the draw should be not less than 1.25mm (0.05") water gauge (12 Pa). If in doubt about the chimney seek expert advice.

HEARTH AND FIRE SURROUND

The stove must stand on a fireproof hearth and must not be situated closer than 600mm from the sides and 700mm from the rear to combustible materials above hearth level unless adequately fireproofed in accordance with local building regulations. The hearth temperature can, in extreme conditions, exceed 100°C and therefore a constructional hearth is required. The positioning of the stove and the size of the hearth are governed by building regulations for Class 1 appliances. These building regulations state that the hearth must extend in front of the stove by at least 225mm (9 inches) and to the sides of the stove by at least 150mm (6 inches). If in doubt as to the positioning of the stove expert advice should be sought either from the supplier or the local building inspector. When the fire door is open, it extends beyond the flat front of the stove by 378mm.

If in doubt as to the positioning of the stove, expert advice should be sought either from the supplier or the local building inspector. The fireplace must allow good circulation of air around the appliance to ensure that maximum heat is transferred to the room and also to prevent the fireplace from overheating. A gap of 150mm (6") each side and 300mm (12") above the appliance should give sufficient air circulation. If a wooden mantelpiece or beam is used in the fireplace it should be a minimum of 460mm (18"), and preferably 600mm (24") from the appliance. In some situations it may be necessary to shield the beam or mantelpiece to protect it.

In order for the fire to operate correctly and to allow for access, there must be an air gap behind the appliance of at least 75mm, but be aware that this distance will need to be greater in some cases to meet Building Regulation requirements.

The appliance should be installed on a floor with adequate load-bearing capacity. If an existing construction does not meet this requirement then please take suitable measures to achieve this. (e.g. load distributing plate.)

CONNECTIONS TO FLUES

The stove must be connected to the flue using flue pipe of 125mm (5") diameter.

If using twin wall flue, the flue collar must be shielded to protect exposed combustible material. This can be done with a shielded starter length of flue.

Fig. 3 Shieding the flue spigot

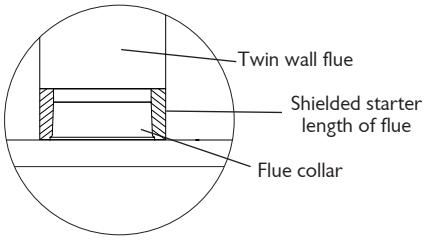

This may be stainless steel, cast iron, or thick wall steel pipe. Charnwood Pipe to match the stove is available if required.

There are several ways of connecting the stove to the flue. These are illustrated in Figs. 5 to 8.

If the top flue connection or optional vertical rear flue connector is used then the chimney may be swept through the appliance.

Horizontal lengths of flue must be kept to a minimum and should not be more in length than the flue diameter.

The stove comes with the blanking plate (fig. 9) fitted to the top flue outlet. The seal for the top outlet is a 155mm dia ring of rope seal. The seal for the rear outlet is a length of adhesive backed fibre webbing supplied with instructions ref: TIS093. This is applied to the flue collar or the Vertical Rear Flue adapter for rear outlet installations. For top outlet installations, the blanking plate must be

removed, have the webbing fitted to its sealing face, and fitted to the rear flue outlet. Ensure that the fold on the clamping plate is in line with the lugs on the firebox as shown in Fig 9. Ensure that the clamping plate does not prevent the throat plate from seating correctly. All flue connections must be well sealed.

SOOT DOORS

It is possible to pass a 16 inch diameter sweeps brush through the appliance but in most back outlet installations it will be necessary to have a soot door to enable the chimney to be swept. The optional vertical rear flue connector does allow the chimney to be swept through the stove. Soot doors may either be in the actual brickwork of the chimney or in the register plate. Various positions of soot doors are shown in Figs. 5 to 8.

Fig. 5 Vertical Register Plate With Bricked Up Fireplace

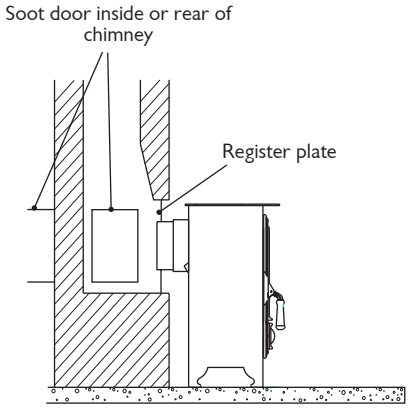

Fig. 6 Horizontal Register Plate With Rear Flue Connection

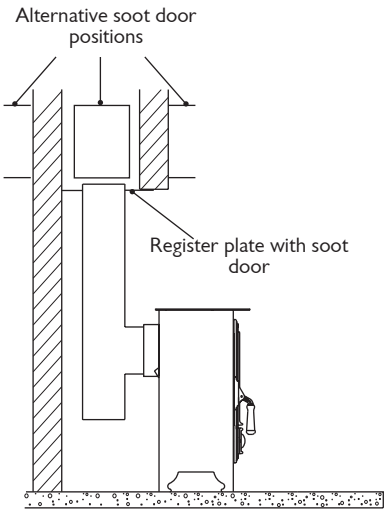

Fig. 7 Horizontal Register Plate With Top Flue Connection

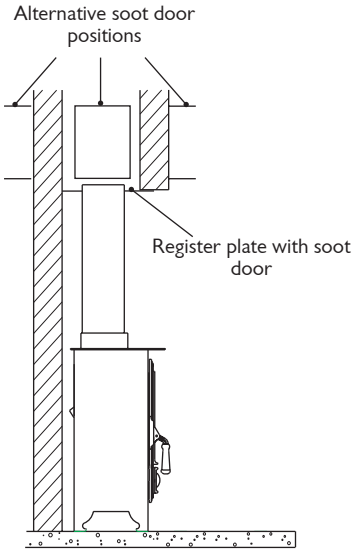

Fig. 8 Horizontal Register Plate With Optional Vertical Rear Flue Connector

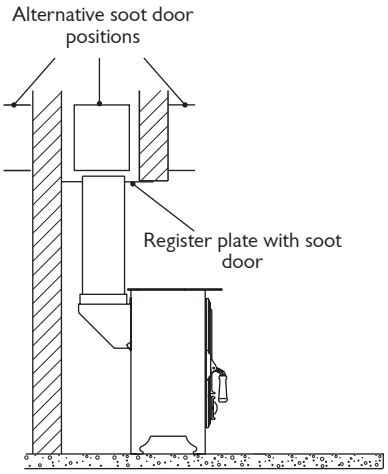

PRE LIGHTING CHECK

Ensure that the throat plate and upper baffle is fitted in the roof of the appliance. For location and positioning see Fig. 2.

Check that the front fence is fitted correctly and that the door closes properly.

COMMISSIONING

On completion of the installation allow a suitable period of time for the fire cement and mortar to dry out before lighting the fire. Make a layer of ash or sand on the base of the stove before lighting. Check to ensure that smoke and fumes are taken from the appliance up the chimney and emitted safely. Also check all joints and seals. On completion of the installation and commissioning please leave the

operating instructions with the customer and advise them on the use of the appliance.

CAA AND SMOKE CONTROL

The Clean Air Act 1993 and Smoke Control Areas

Under the Clean Air Act local authorities may declare the whole or part of the district of the authority to be a smoke control area. It is an offence to emit smoke from a chimney of a building, from a furnace or from any fixed boiler if located in a designated smoke control area. It is also an offence to acquire an "unauthorised fuel" for use within a smoke control area unless it is used in an "exempt" appliance ("exempted" from the controls which generally apply in the smoke control area).

In England appliances are exempted by publication on a list by the Secretary of State in accordance with changes made to sections 20 and 21 of the Clean Air Act 1993 by section 15 of the Deregulation Act 2015. Similarly in Scotland appliances are exempted bypublication on a list by Scottish Ministers under section 50 of the Regulatory Reform (Scotland) Act 2014.

In Northern Ireland appliances are exempted by publication on a list by the Department of Agriculture, Environment and Rural Affairs under Section 16 of the Environmental Better regulation Act (Northern Ireland) 2016.

In Wales appliances are exempted by regulations made by Welsh Ministers.

Further information on the requirements of the Clean Air Act can be found here: https://www.gov.uk/smoke-control-area-rules

Your local authority is responsible for implementing the Clean Air Act 1993 including designation and supervision of smoke control areas and you can contact them for details of Clean Air Act requirements.

The Country 4 blu has been been recommended as suitable for use in smoke control areas when burning wood logs. The stove includes a provided modification that must be fitted to prevent the air control from complete closure of the air supply. Details on how to fit the modifcation are in the supplied sheet ref: TIS.135 Suitable Authorised fuels can also be burned within Smoke Control Areas. A list of Authorised fuels can be found here: https://smokecontrol.defra.gov.uk/fuels.php.

Fig. 9. Flue Blanking Plate.

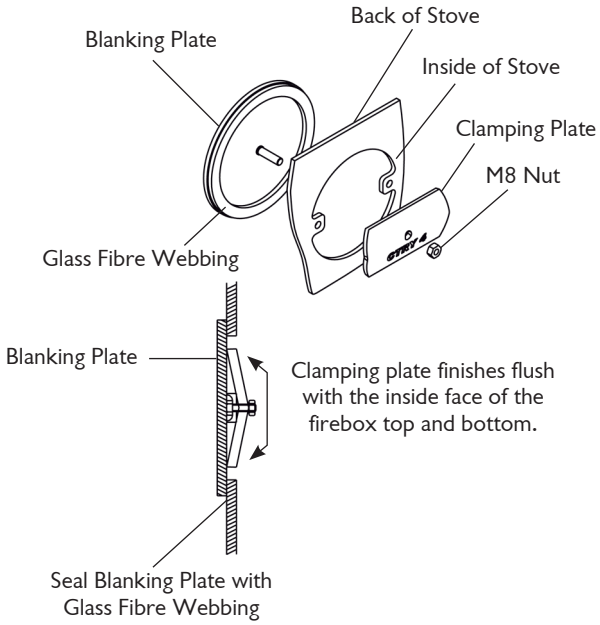

DIMENSIONS

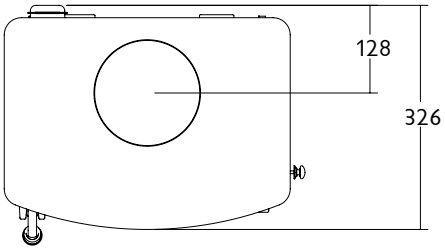

PLAN VIEW

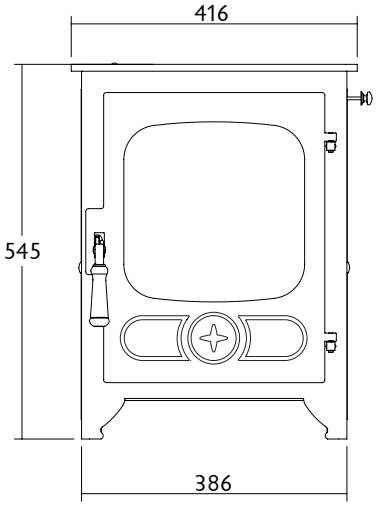

FRONT

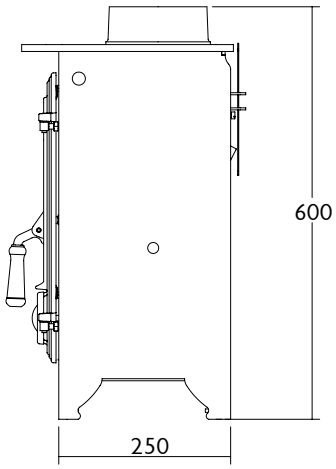

SIDE

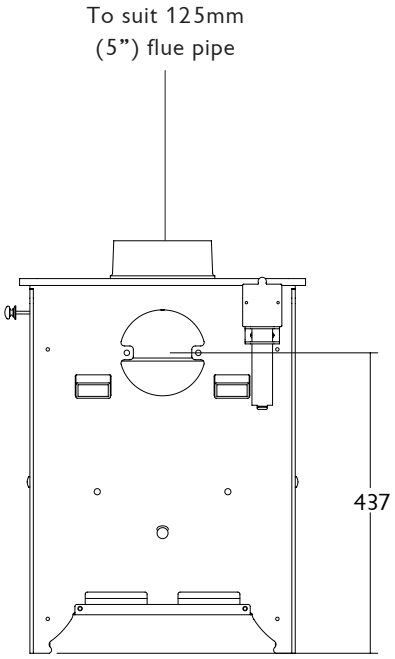

REAR

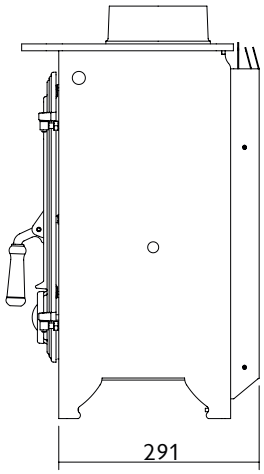

WITH HEATSHIELD

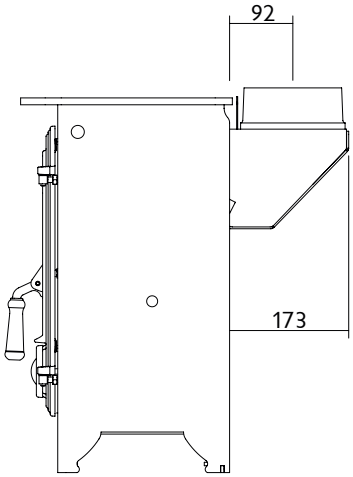

WITH VERTICAL REAR
FLUE ADAPTOR

Charnwood Country 4 BLU Parts List

Issue A

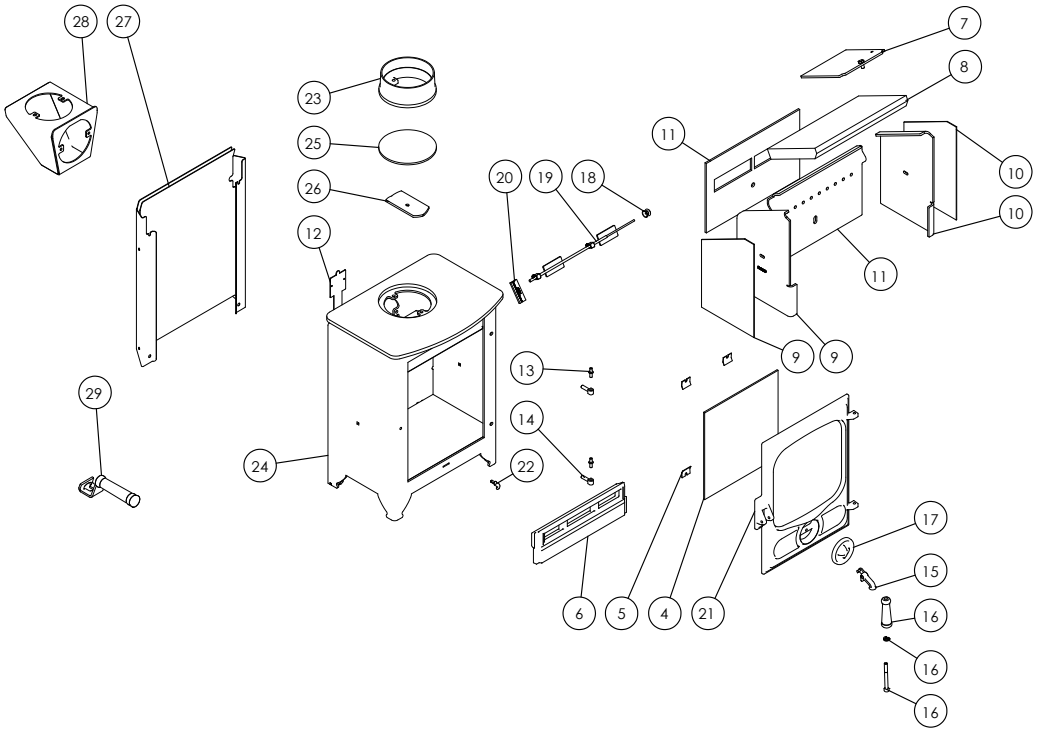

Item	Part No.	Description
1*	008/PV21	Door Seal
2*	008/FW29	Door Seal Adhesive
3*	008/PV55	Glass Seal Kit
4	006/PV19	Glass (Inc Seal)
5	004/KV23	Glass Retainer
6	002/EY23	Fuel Retainer
7	010/EYE032	Upper Baffle
8	011/EYE031	Throat Plate Brick
9	010/EYE029	L.H. Side Fire Plate (Inc Gasket)
10	010/EYE028	R.H. Side Fire Plate (Inc Gasket)
11	010/EYE016	Back Fire Plate (Inc Gasket)
12	012/EYE011	Serial No. Label
13	008/ST068/2	Hinge Pin Set (2 Per Set)
14	008/FW28	Hinge Post
15	002/PV03	Door Catch Lever
16	008/PV08	Door Handle (Incl. Screw & Washer)
17	002/PV02	Primary Air Control
18	002/TW13	Air Control Knob
19	004/EY48	Airwash Slide
20	010/EYE021	Defra Stop
21#	002/PV01/A	Door Assembly
22	002/PV13	Door Latch Hook
23#	002/PV12B	Flue Collar
24	001/EYE010	Firebox (Country 4 MkII)
25	012/PV09	Blanking Plate
26	010/EY51	Clamping Plate
27#	010/EYE080	Rear Heatshield (Opt'l Extra)
28#	010/BU034	Vert. Rear Flue Adapter (Opt'l Extra)
29	012/BV20/A	Door Opening Tool

* These items are not shown on the drawing.
\# Please specify colour when ordering.

To obtain spare parts please contact your local stockist giving Model, Part No. and Description. In case of difficulty contact the manufacturer at the address shown. This drawing is for identification purposes only.

charnwood

CE

AJ WELLS & SONS LTD

Bishops Way, Newport, Isle Of Wight PO30 5WS, United Kingdom

A Division of A.J.Wells & Sons Limited Registered In England No. 03809371

CE certificate for compliance with EN13240:2001

19

EN13240:2001

ROOMHEATERS FIRED BY SOLID FUEL

Model:	COUNTRY 4 BLU
EC Certificate of conformity no:	EYE11-CPD-2018
Fuel type:	WOOD LOGS
Rated space heating thermal output:	5kW
Emission of CO in combustion products:	0.10
Mean flue gas temperature:	221
Energy efficiency:	84
Particles (mg/m^3_n)	20
Minimum distance to combustible materials without heatshield Side: Rear: Minimum distance to combustible materials with heatshield Side: Rear:	 480 550 480 150
Fulfilled requirements: BStV of the City of Munich and the City of Regensburg FBStVO of the City of Aachen and the City of Düsseldorf 1.and 2. level of 1. BImSchV of Germany	✓

EN - PRODUCT FICHE | IT - SCHEDA PRODOTTO | ErP (EU 2015/1187)

FR - FICHE DE PRODUIT | PL - KARTA PRODUKTU

MANUFACTURER / MARQUE / MARCHIO / MARCA

charnwood

Bishops Way, Newport, Isle of Wight PO30 5WS, United Kingdom

A Division of A.J.Wells & Sons Limited Registered in England No. 03809371

MODEL / MODÈLE / MODELLO / MODEL	EFFICIENCY CLASS / CLASSE D'EFFICACITÉ / CLASSE DI EFFICIENZA / KLASA EFEKTYWNOŚCI	NOMINAL HEAT OUTPUT TO ROOM / PUISSANCE THERMIQUE NOMINALE / POTENZA TERMICA NOMINALE / NOMINALNA MOC CIEPLNA	ENERGY EFFICIENCY INDEX / INDICE EFFICACITÉ ÉNERGÉTIQUE / INDICE DI EFFICIENZA ENERGETICA / INDEX EFEKTYWNOŚCI ENERGETYCZNEJ	SEASONAL SPACE EFFICIENCY / EFFICACITÉ ÉNERGÉTIQUE SAISONNIÈRE POUR LE CHAUFFAGE DES LOCAUX / EFFICIENZA ENERGETICA STAGIONALE DI RISCALDAMENTO DI AMBIENTE / SEZONOWA EFEKTYWNOŚĆ CIEPLNA
AIRE 3	A +	3.7	115.7	86.0
AIRE 5	A +	5.0	112.8	82.0
AIRE 7	A +	7.0	109.9	82.0
ARC 5	A +	5.0	109.9	82.0
ARC 7	A +	7.0	108.5	81.0
BAY 5	A +	5.0	108.5	81.0
BAY 5 BX	A +	5.0	108.5	81.0
BAY 5 VL	A +	5.0	108.5	81.0
BEMBRIDGE	A +	5.0	109.9	82.0
C-FOUR BLU	A +	4.8	109.9	82.0
C-FOUR INSERT	A +	5.0	107.0	80.0
C-FIVE BLU	A +	5.0	109.9	82.0
C-SIX	A +	6.7	109.8	81.9
C-SIX BLU	A +	5.9	109.9	82.0
C-EIGHT BLU	A +	8.0	108.5	81.0
COUNTRY 4 BLU	A +	5.0	112.8	82.0
COUNTRY 6	A +	6.2	107.7	80.5
COVE 3 BLU	A +	12.0	107.0	80.0
ISLAND I (AP)	A +	5.0	114.3	85.0
ISLAND II (BP)	A +	8.0	109.9	84.0
SKYE 5	A +	5.0	115.7	86.0
SKYE 7	A +	7.3	107.0	80.0
C-FOUR	A	4.9	104.5	78.3
C-FIVE	A	5.0	100.8	75.7
C-SEVEN	A	7.6	102.5	76.9
C-SEVEN BLU	A	7.1	105.6	79.0
C-EIGHT	A	8.3	104.1	78.0
COUNTRY 12	A	12.3	98.4	74.1
COUNTRY 4	A	4.8	102.4	76.8
COUNTRY 8	A	8.6	106.7	79.8
COVE 1	A	4.1	101.9	76.5
COVE 1SR	A	4.3	106.0	79.3
COVE 2	A	8.3	99.3	74.7
COVE 2 BLU	A	8.0	102.7	77.0
COVE 2SR	A	8.3	99.3	74.7
COVE 3	A	12.3	104.7	78.4
ISLAND I	A	5.0	104.0	77.9
ISLAND II	A	8.0	104.1	78.0
ISLAND II BLU	A	8.0	105.6	79.0
ISLAND IICT	A	8.4	105.6	79.0
ISLAND III	A	12.3	101.8	76.4
ISLAND III BLU	A	11.0	105.6	79.0
LA10	A	4.8	102.4	76.8
SLX20	A	5.8	100.8	75.7
TOR	A	8.4	97.0	73.1
TOR PICO	A	5.2	105.8	79.2

Comply with the warnings and instructions concerning installation and maintanence in the operating and installation manual supplied with the stove.

your premier dealer

charnwood BISHOPS WAY, NEWPORT, ISLE OF WIGHT PO30 5WS, UNITED KINGDOM

TEL. +44 (0) 1983 537777 • FAX. +44 (0) 1983 537788 • WWW.CHARNWOOD.COM

A Division of A.J.Wells & Sons Limited Registered in England No. 03809371