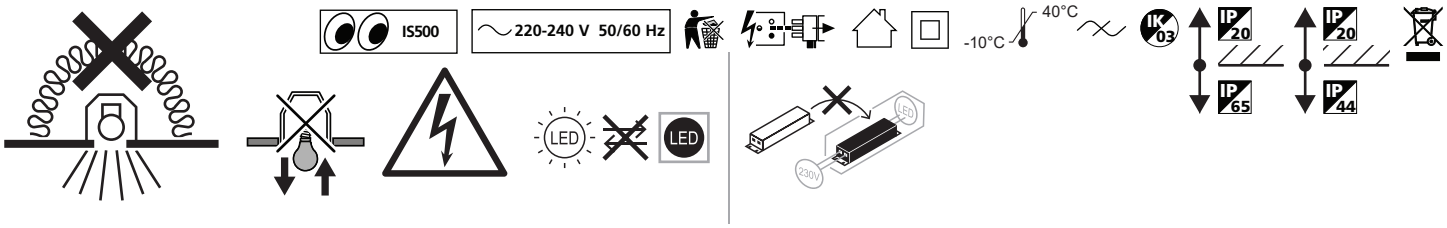

START Spot 3CCT IP44

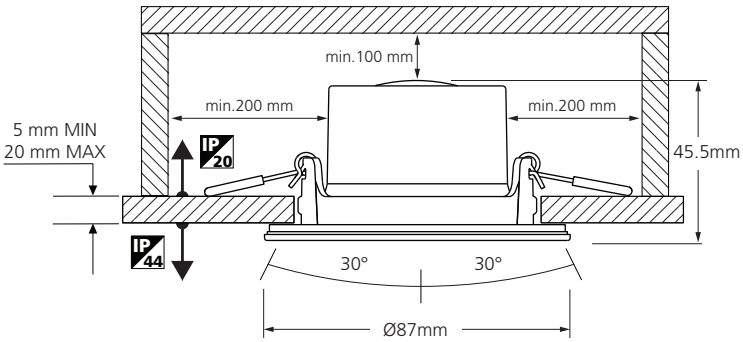

START Spot 3CCT IP65

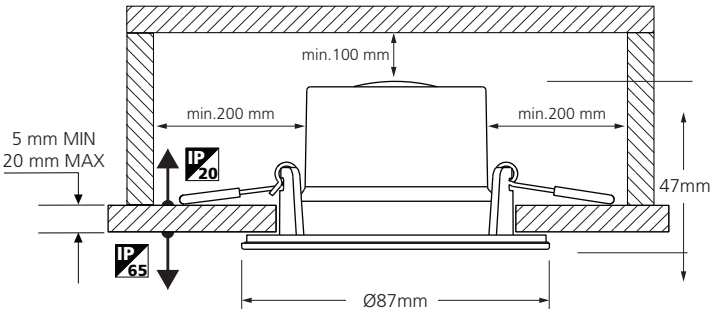

1

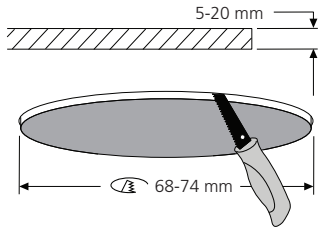

2a AC 220-240 V

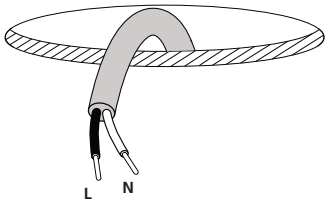

2b AC 220-240 V

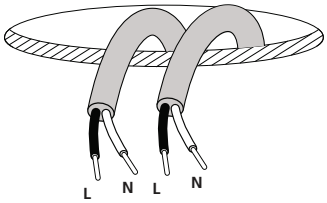

3

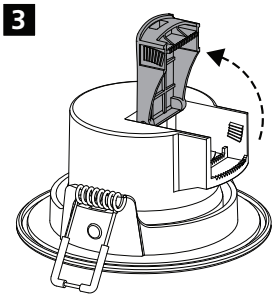

4a AC 220-240 V

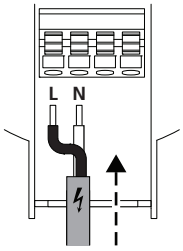

4b AC 220-240 V

Total Max. **1.8 A**

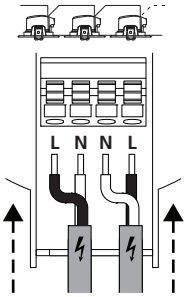

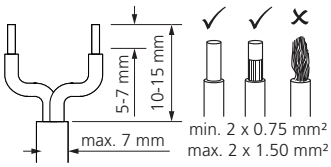

10A C-type	16A C-type
(pcs)	(pcs)
60	100

5

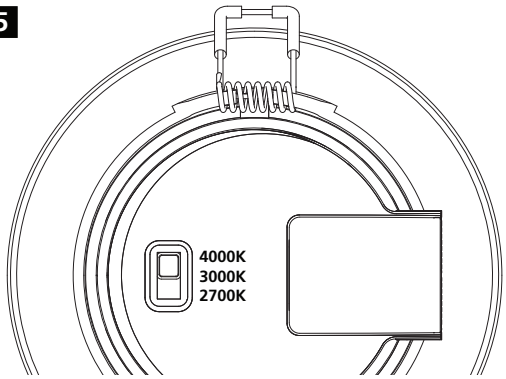

6

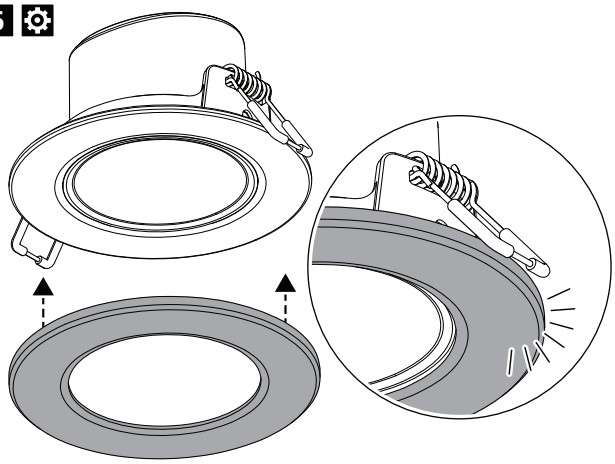

7

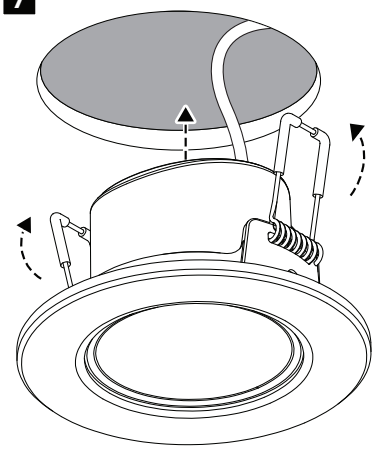
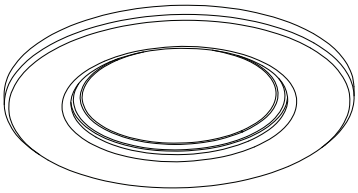
8