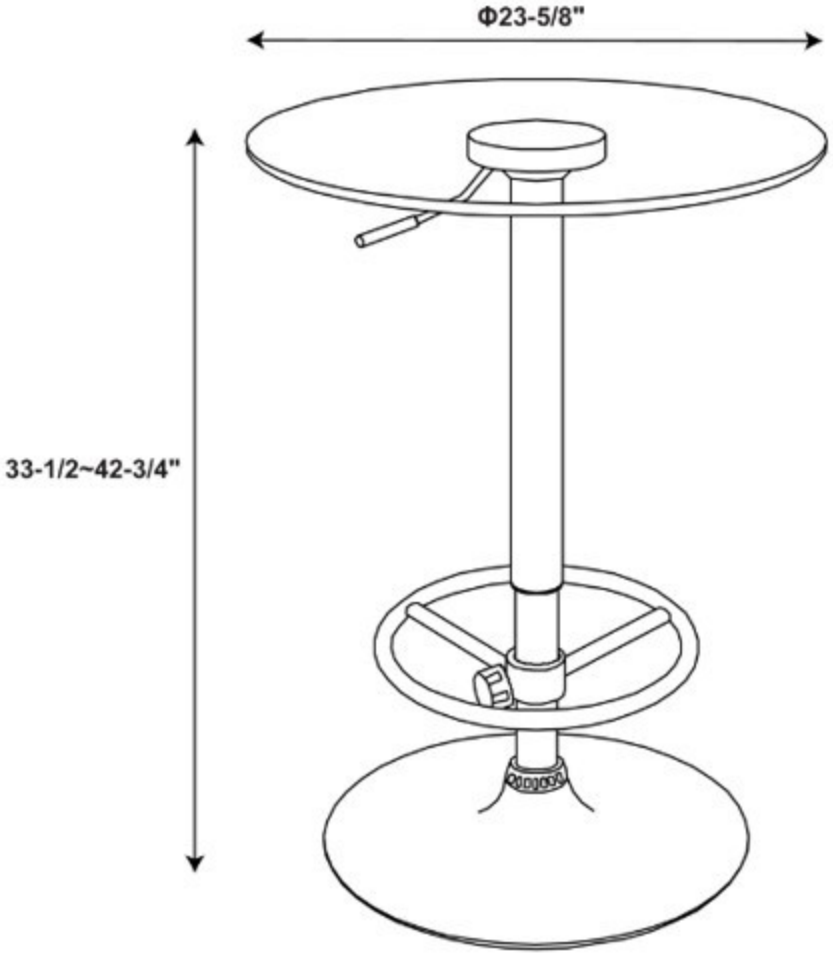
Φ23-5/8"
33-1/2~42-3/4"

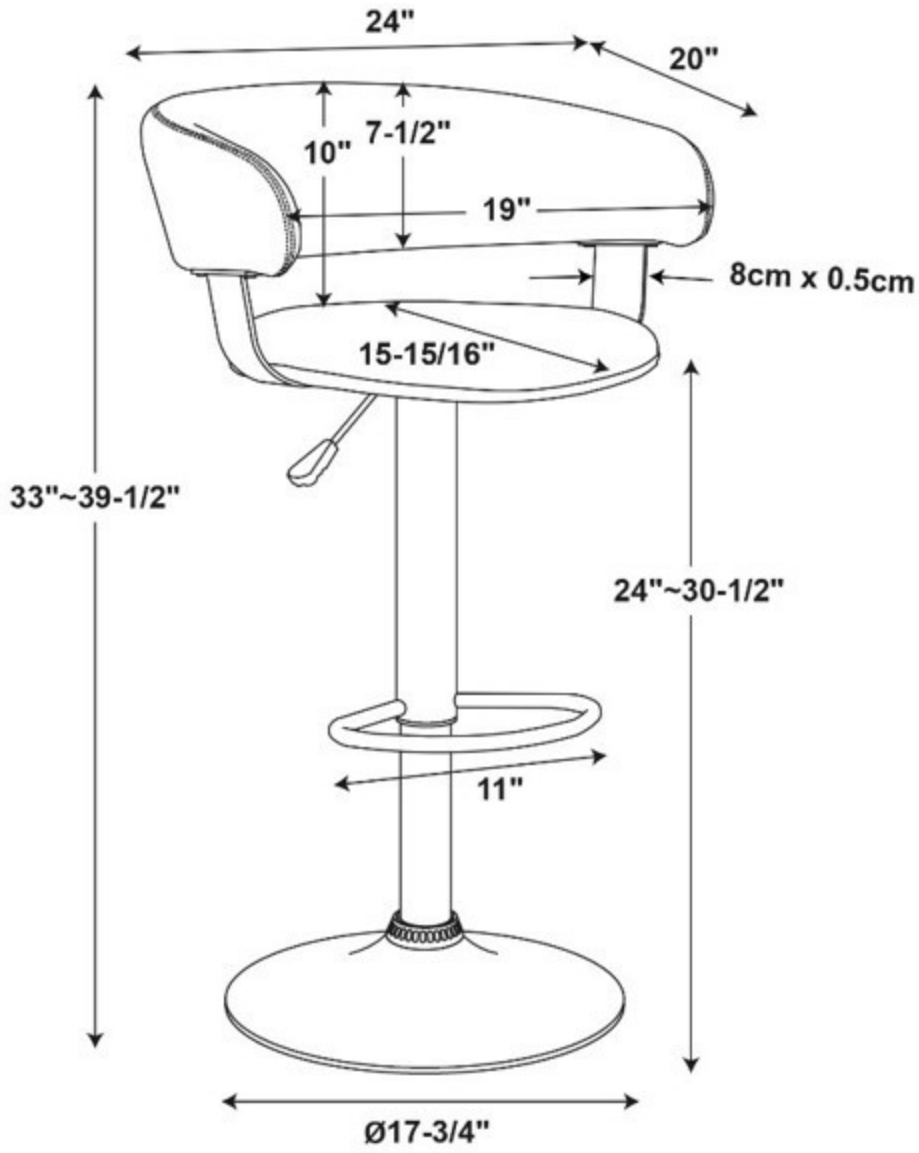
24"
20"
10"
7-1/2"
19"
8cm x 0.5cm
15-15/16"
33"~39-1/2"
24"~30-1/2"
11"
Ø17-3/4"