Endless Loop Express

1

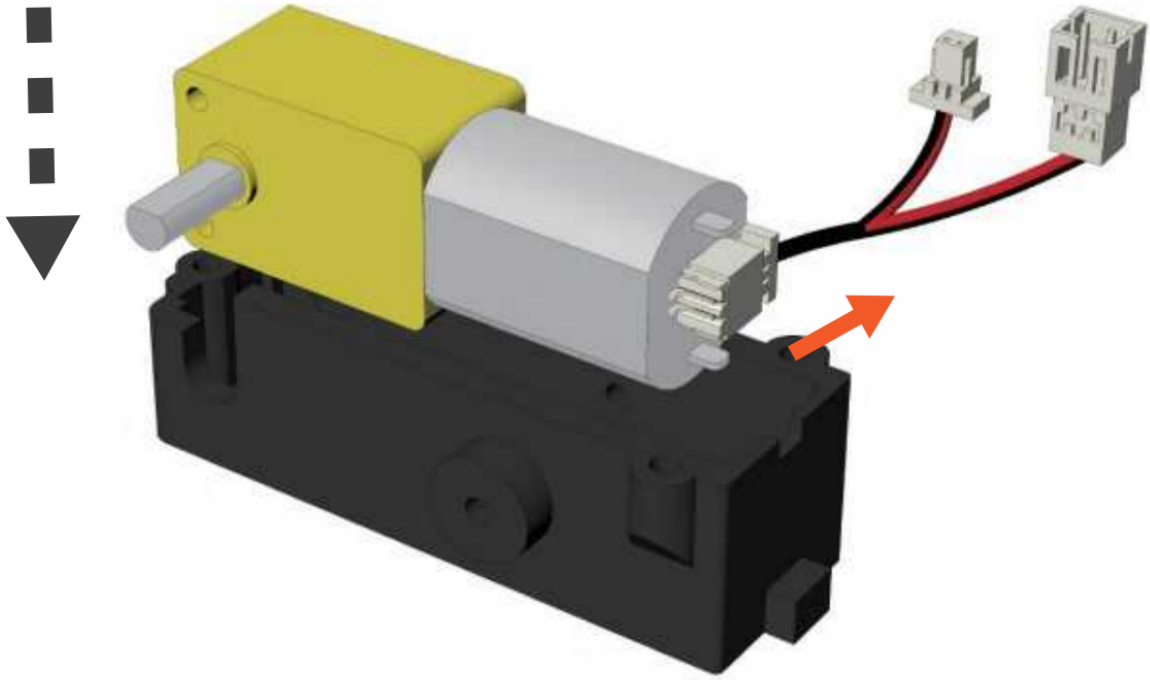

Install the motor, paying attention to the direction of the motor's wires. Incorrect wire direction will cause the train to be unable to move forward normally.
The orange arrow indicates the correct direction for the motor's wires.

2

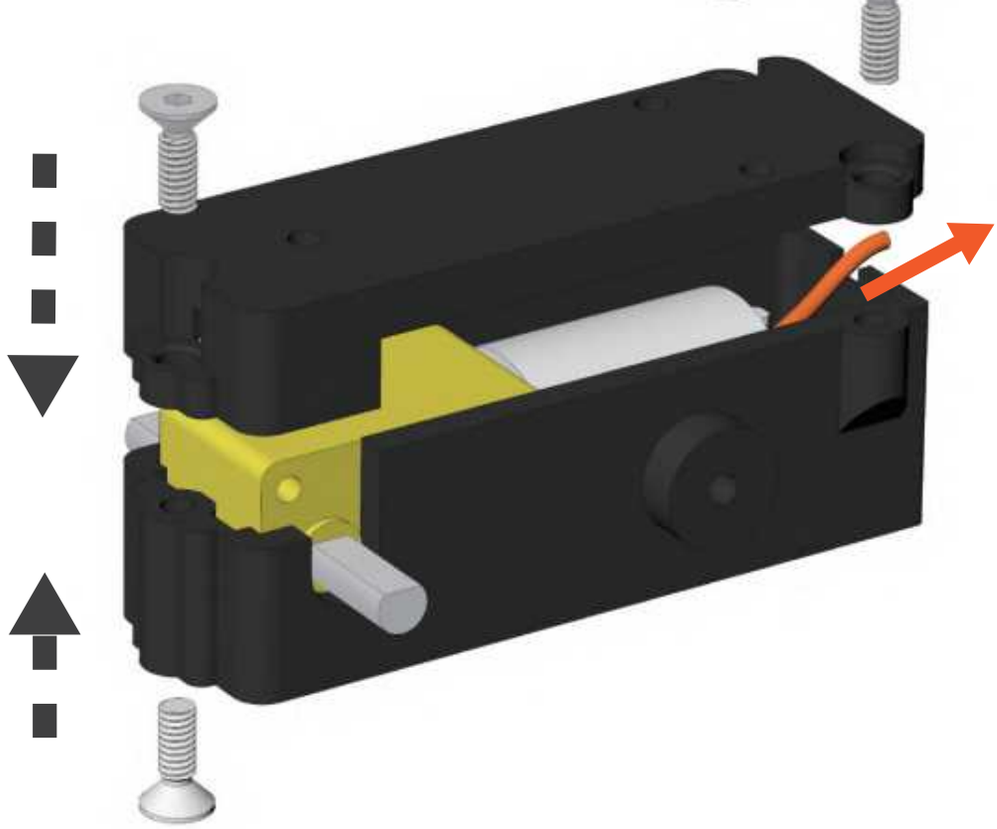

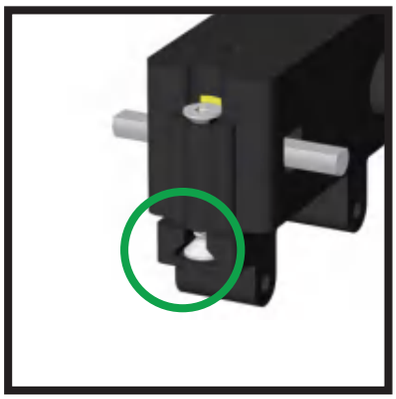

Adjust the depth of the bottom screws until they can be inserted into the mating part.

3

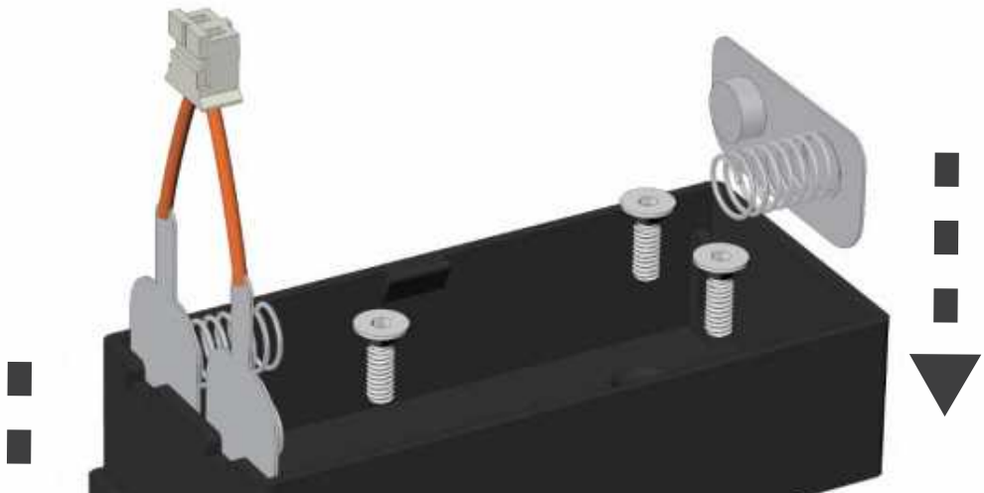

4

Apply glue on the "red" surface to assemble the mating part.

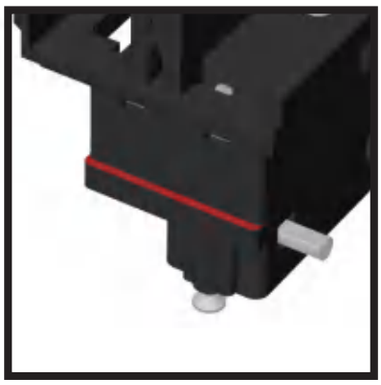

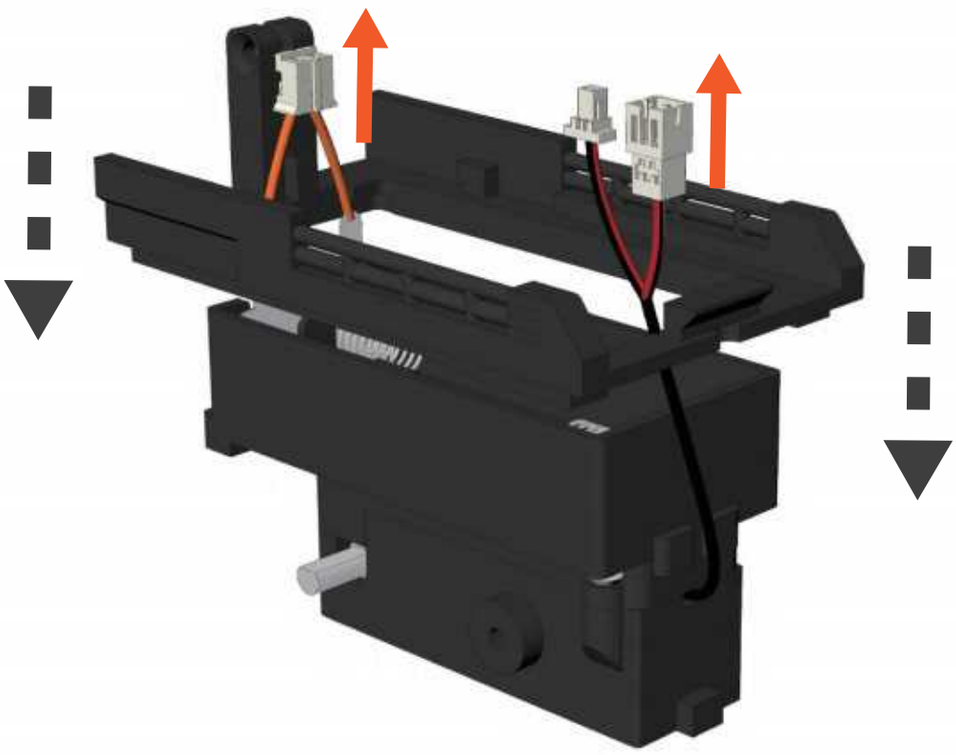

After inserting the mating part, fold down the battery terminals.

5

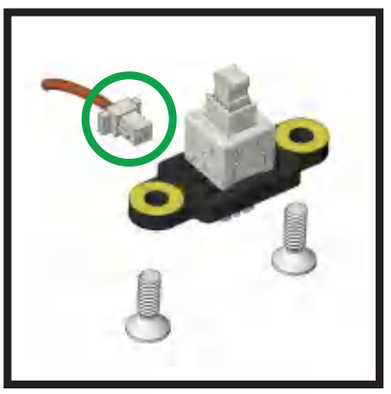

The other end of the wire is used to connect the switch. In this step, do not connect the switch yet. The switch will be connected in a later step.

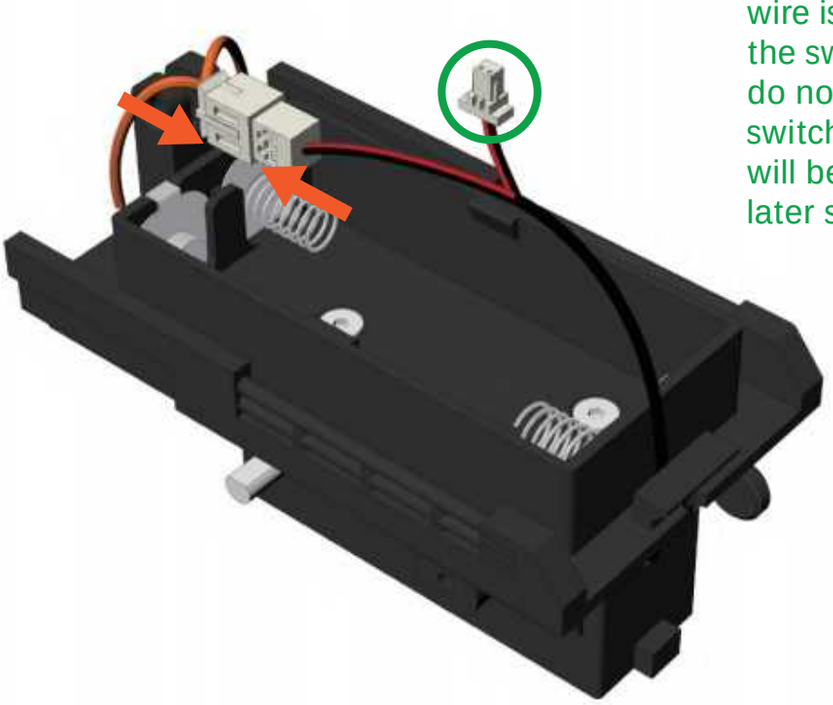

6

When installing the geared wheel, align the D-shaped shaft of the motor with the D-shaped hole of the geared wheel. To facilitate observation, the wires assembled in the previous steps have been temporarily concealed.

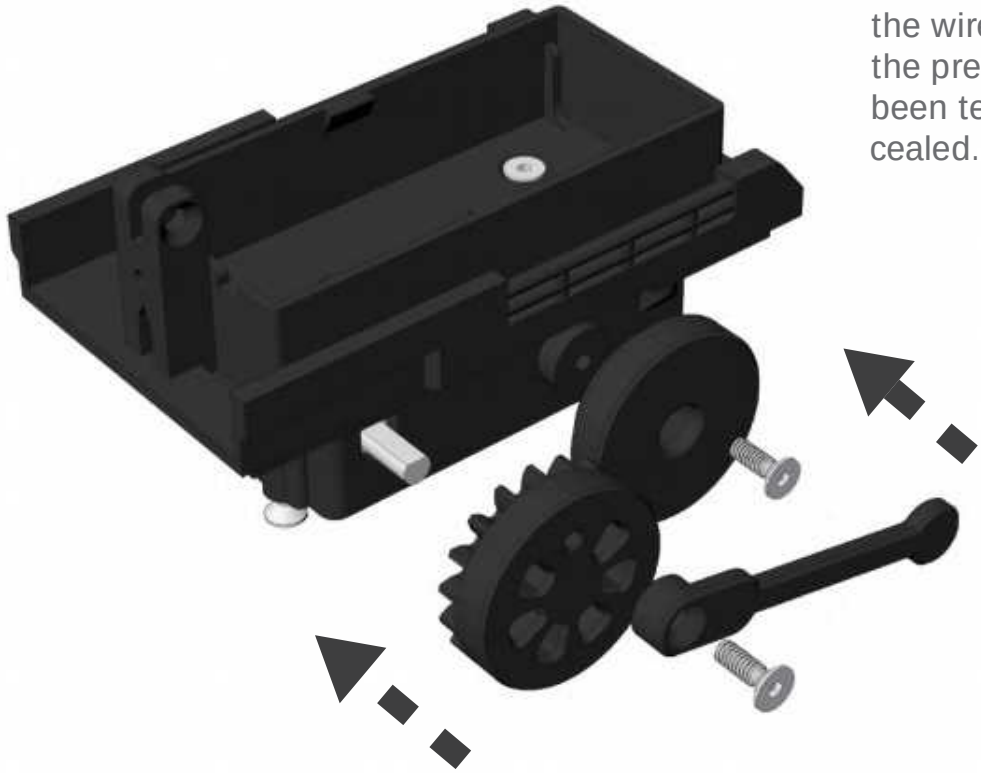

7

Apply glue on the "red" surface to assemble the mating part.

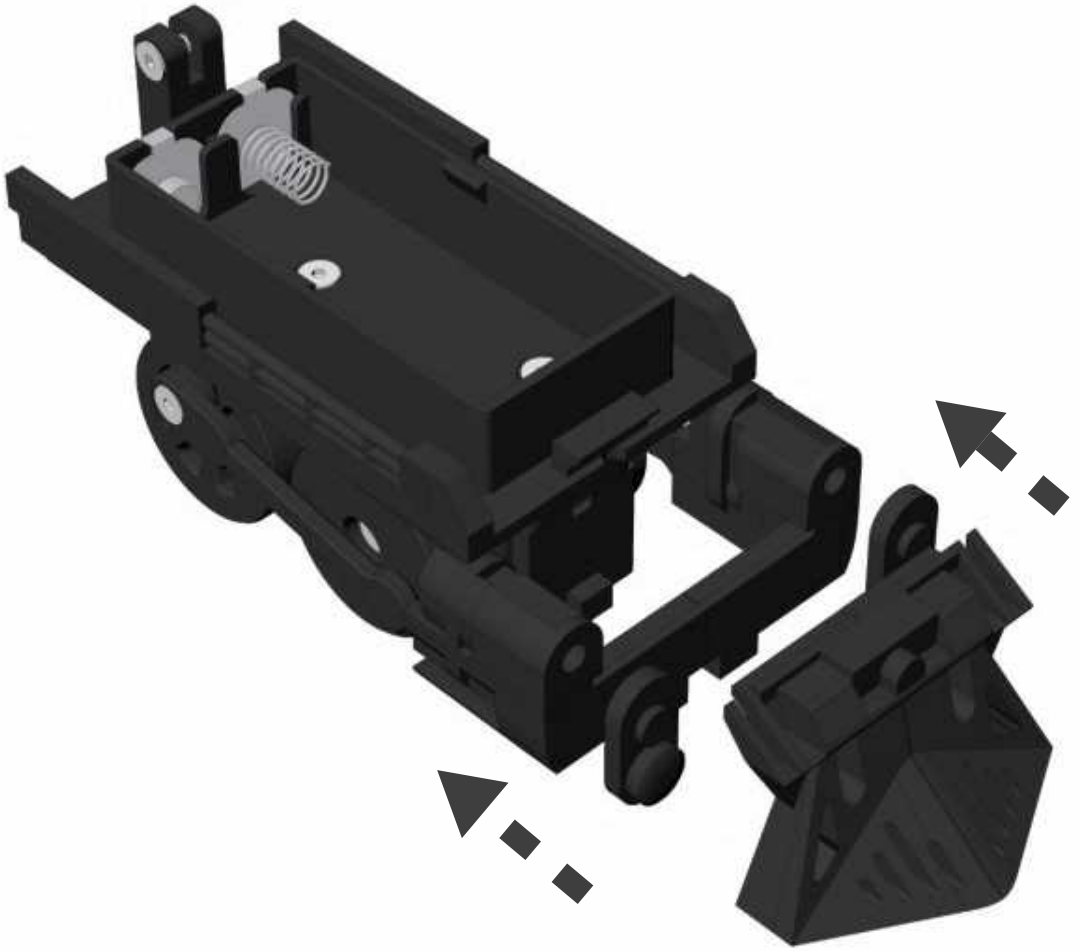

For reference: Appearance after assembly

8

Apply glue on the "red" surface to assemble the mating part.

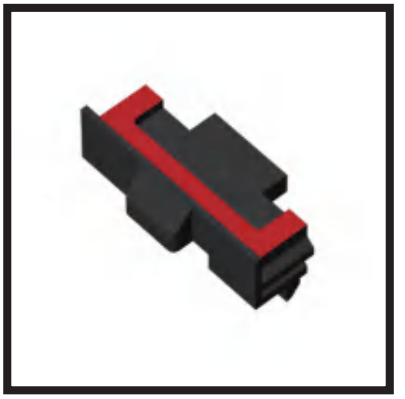

9

Install the switch and wiring. Connect the switch wires mentioned in step 5 in this step.

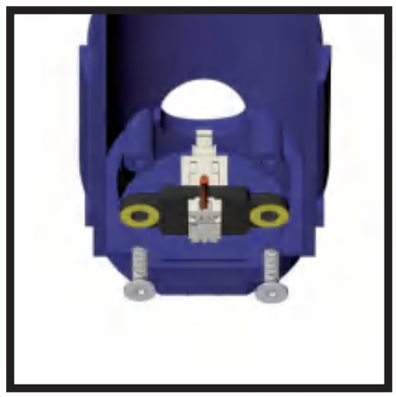

10

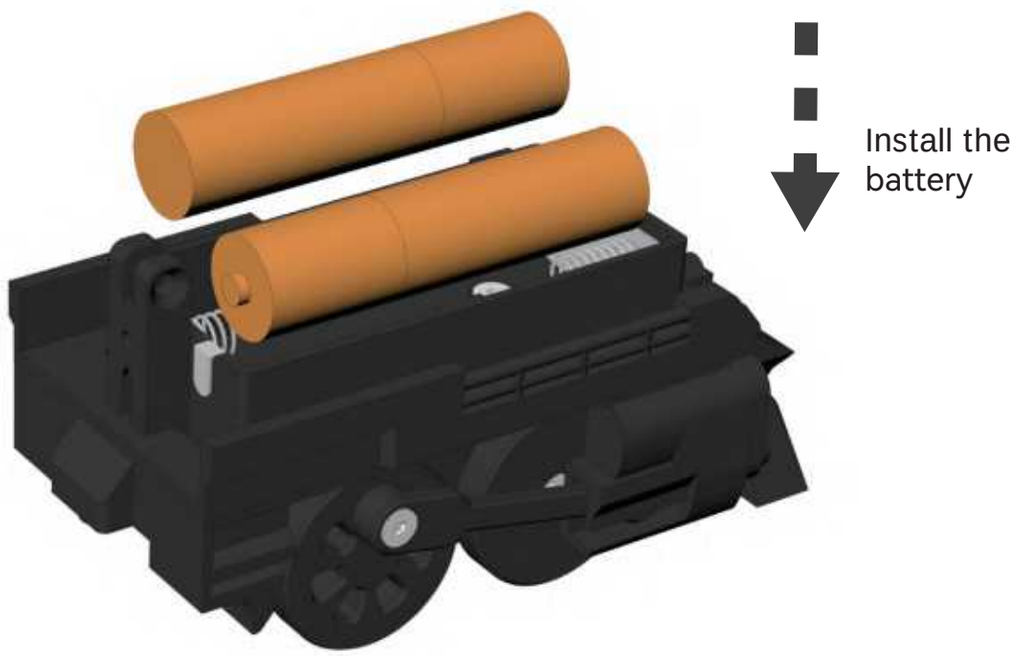

11

Note that there are two notches on the assembly structure inside the chimney (switch cap). When assembling, align these two notches with the left and right sides of the switch.

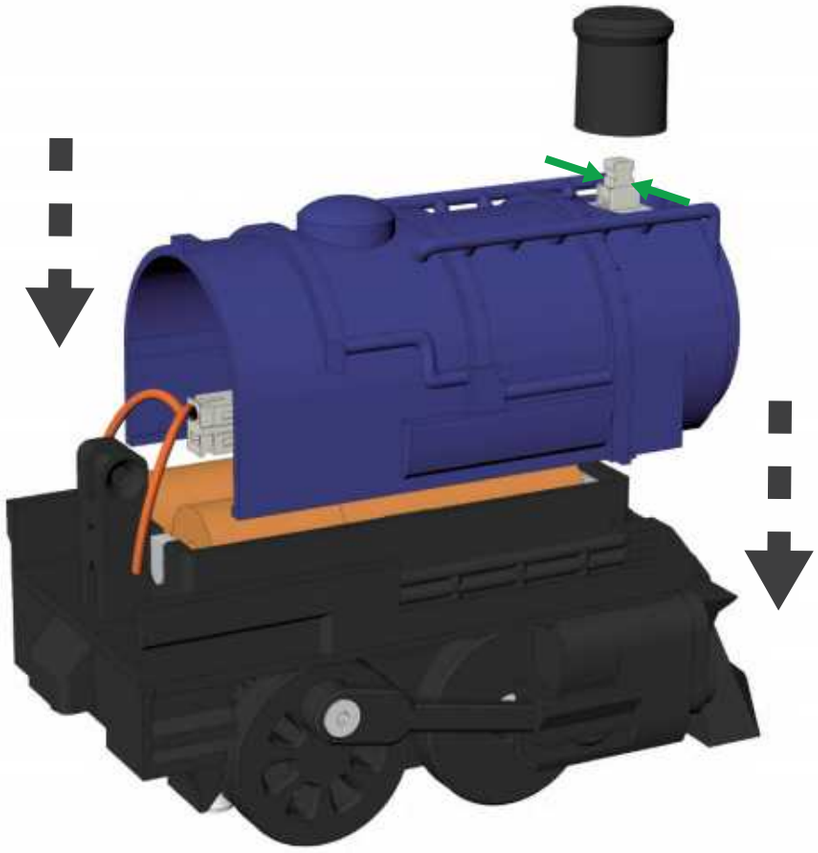

12

1.Lower the cockpit cover vertically.
2.Slide the cockpit cover forward horizontally and tighten the screws.

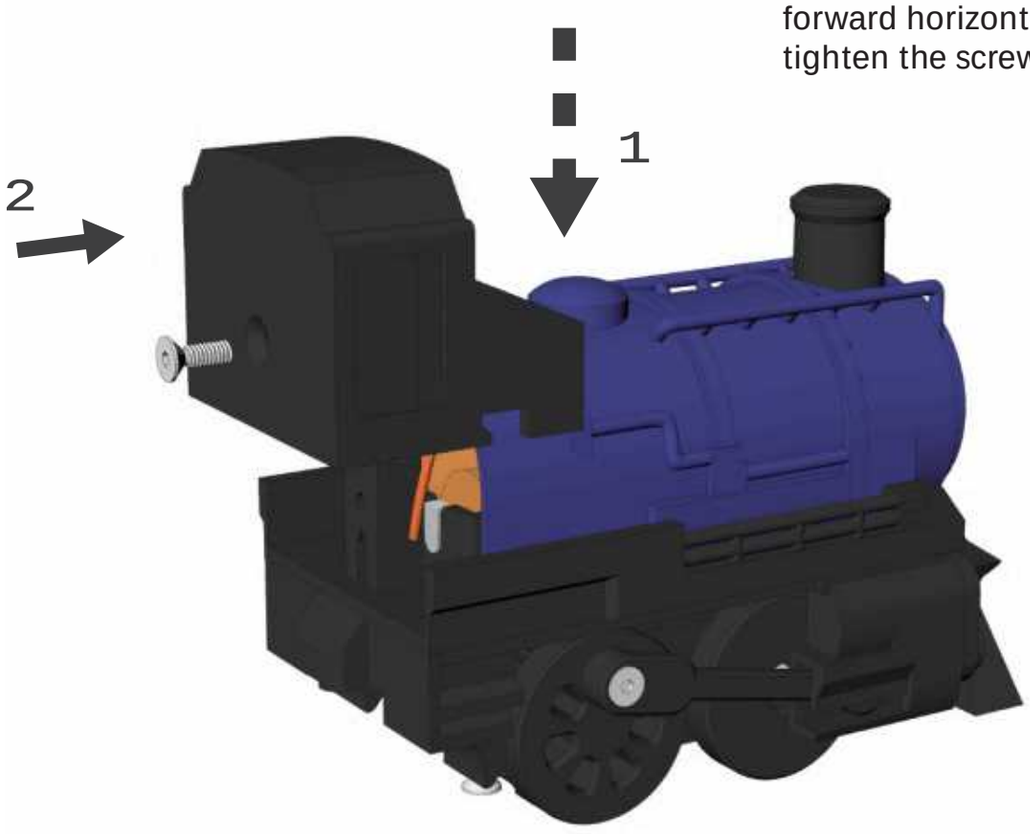

13

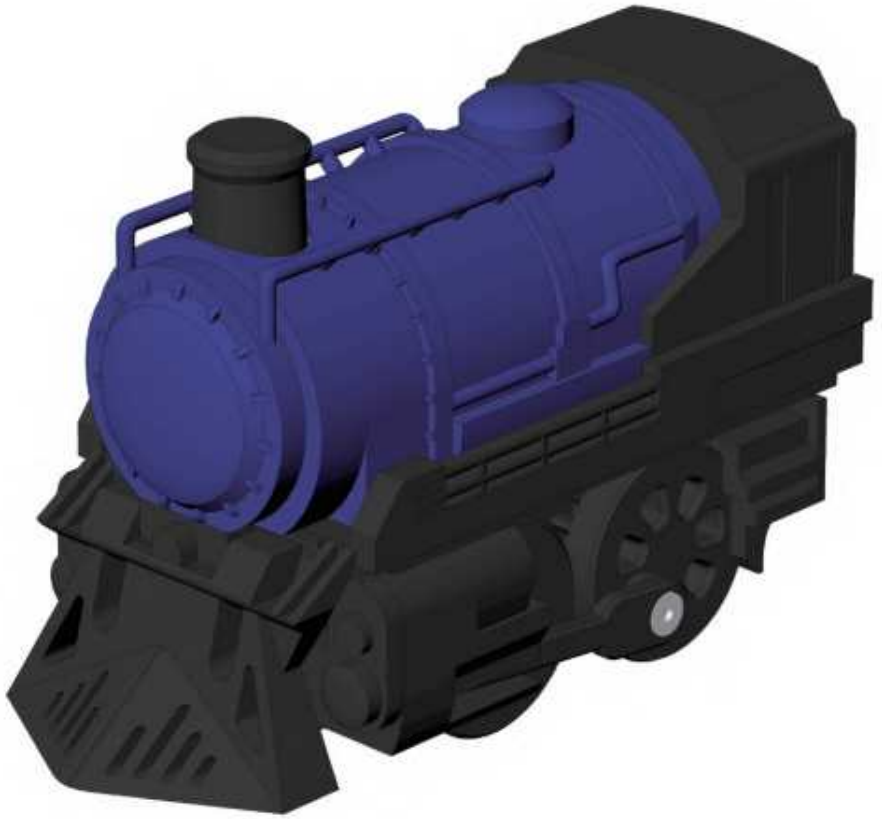

Press down on the train's smokestack to activate the engine.
Observe the wheels to ensure they are rotating smoothly.

14

Assemble the pulley.
Apply glue to the red surface to bond the magnet (Note: Wait for the glue to fully dry, otherwise the magnet may fall off)

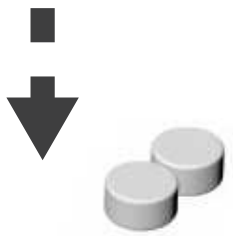

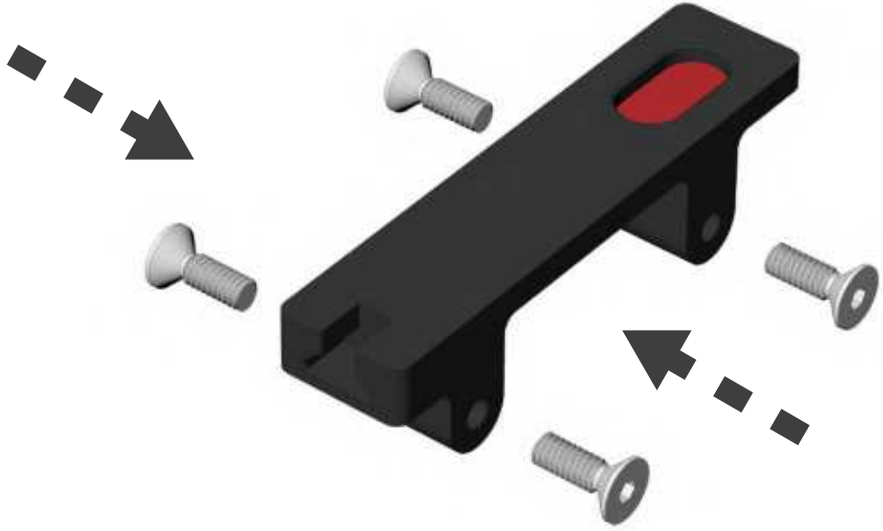

Do not screw too deep, as shown in the figure.

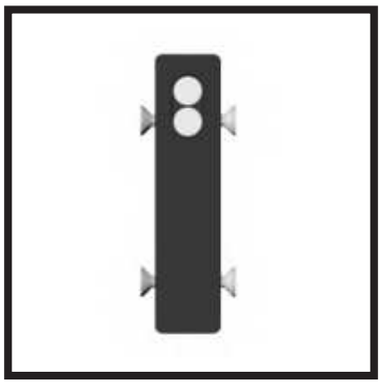

15

Apply glue on the "red" surface to assemble the mating part.

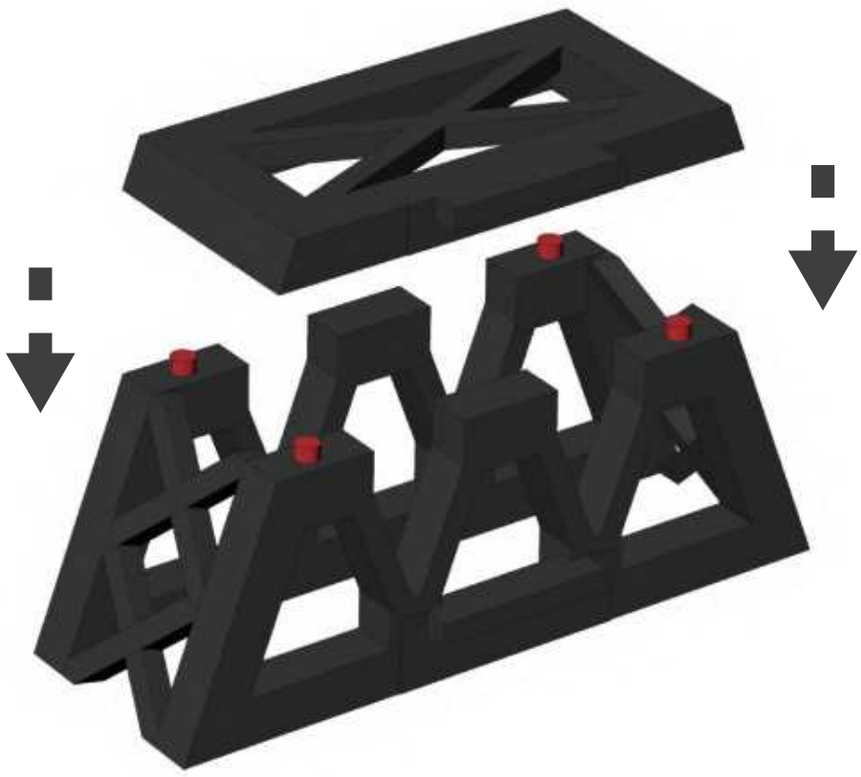

16

Apply glue on the "red" surface to assemble the mating part.

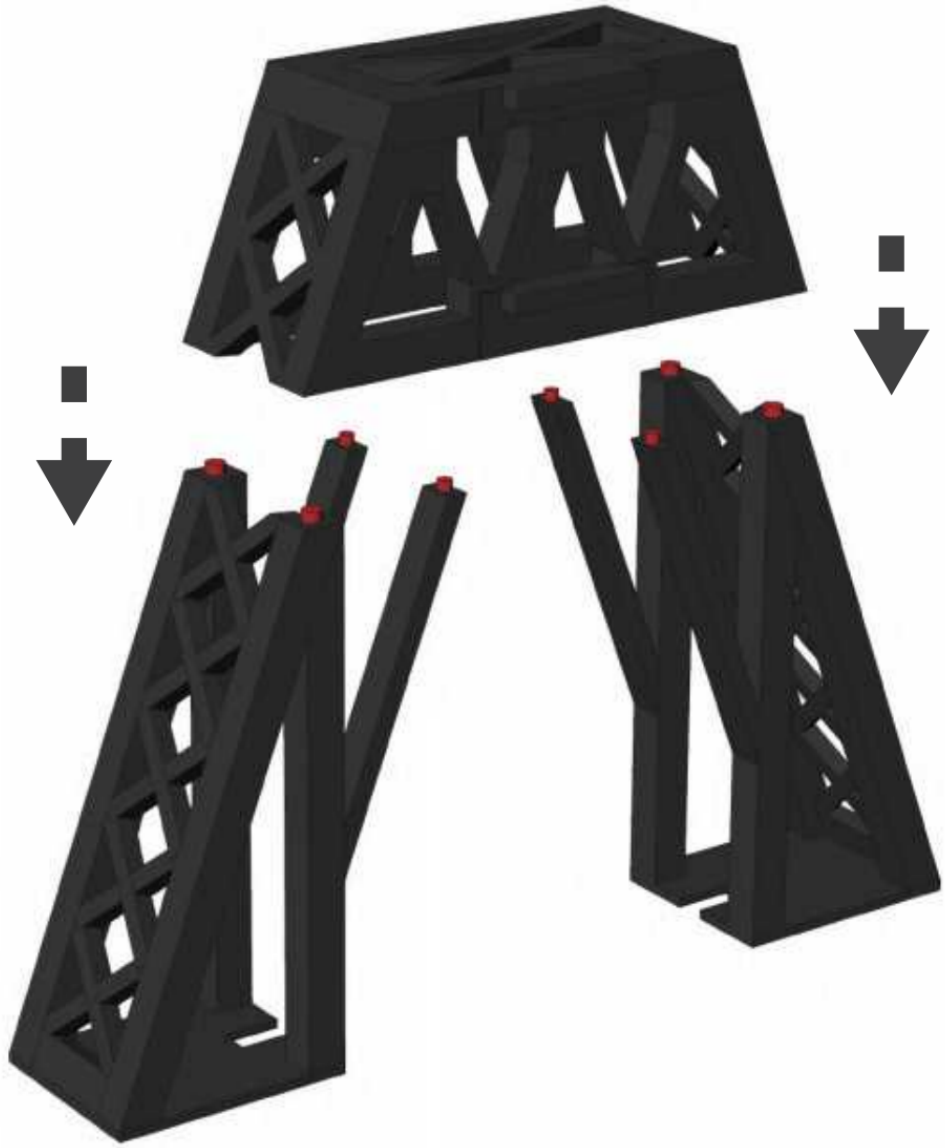

17

Apply glue on the "red" surface to assemble the mating part.

18

Apply glue on the "red" surface to assemble the mating part.

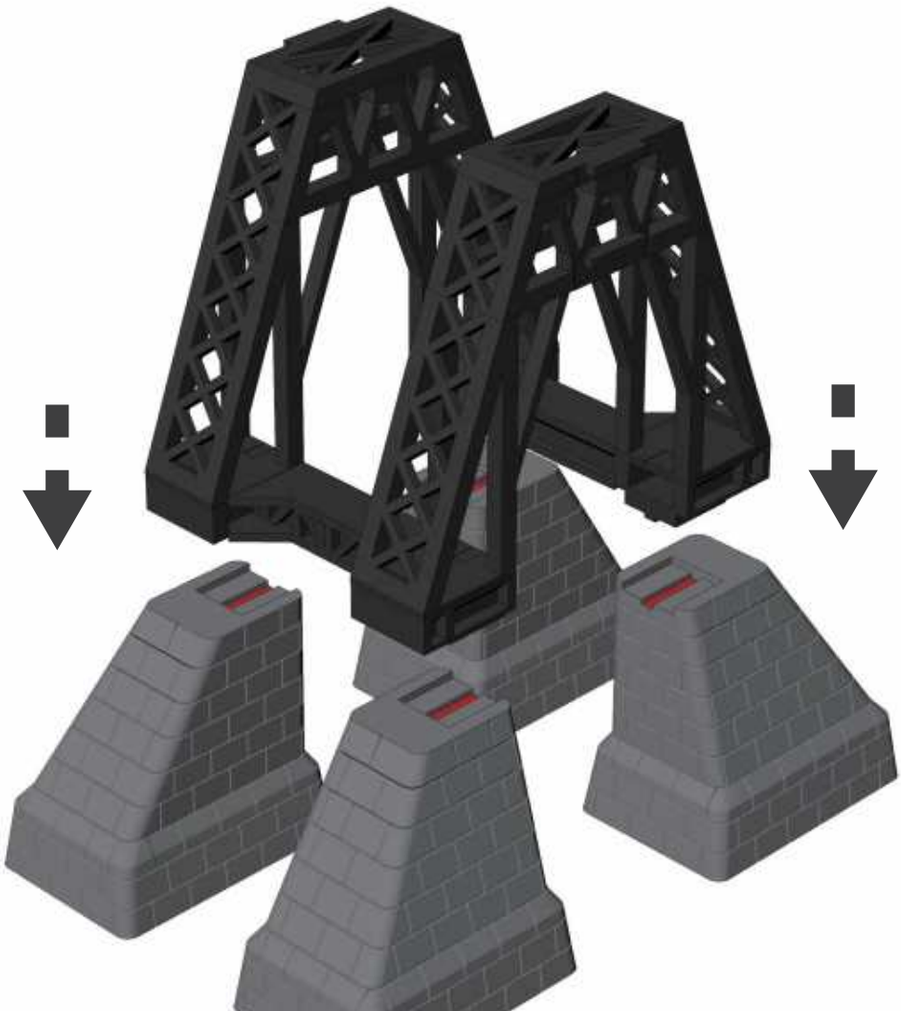

19

Use the four positioning points on the track to confirm the installation height of the track relative to the bracket.

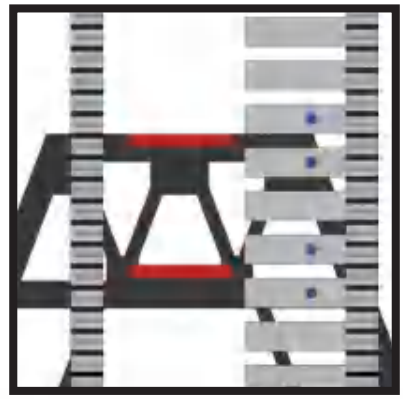

Insert the two tracks into the bracket, then place the pulley into the track slot, and finally, glue the two tracks together.

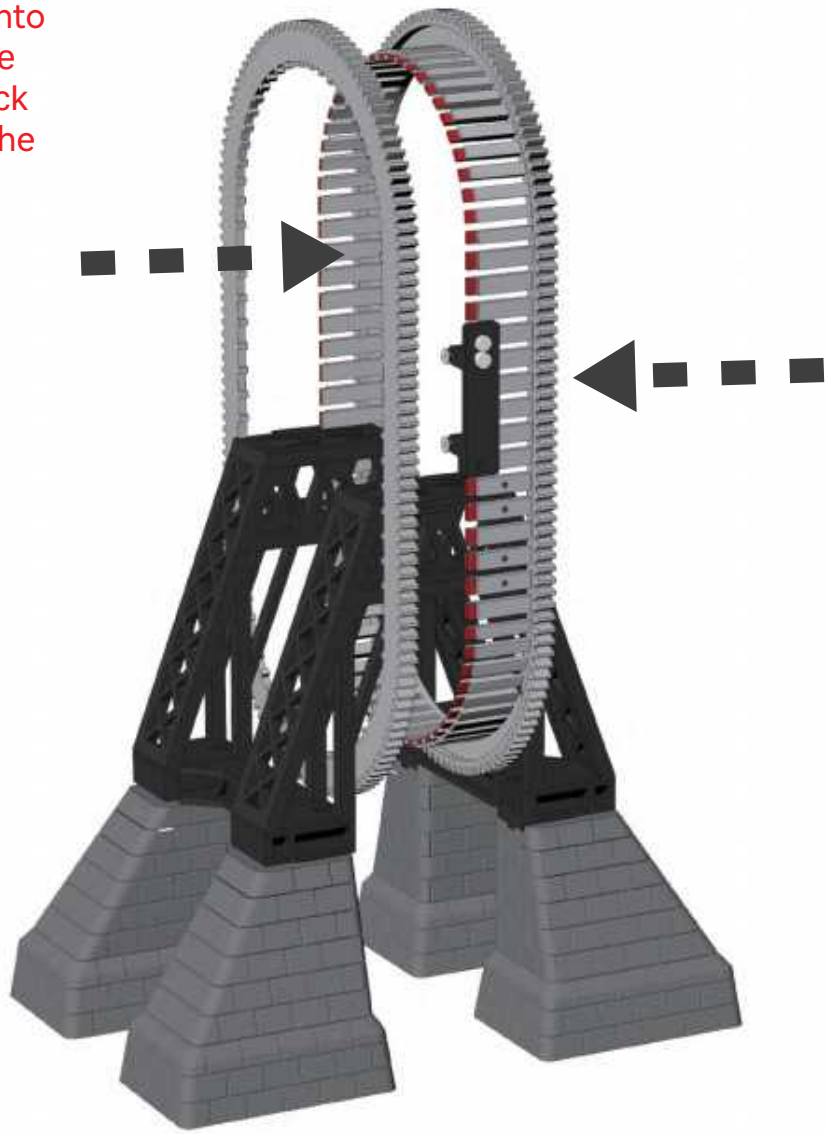

Once the pulley is installed on the track, check if it can move smoothly along the track slot.

20

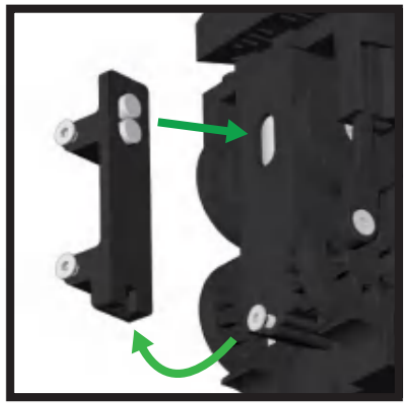

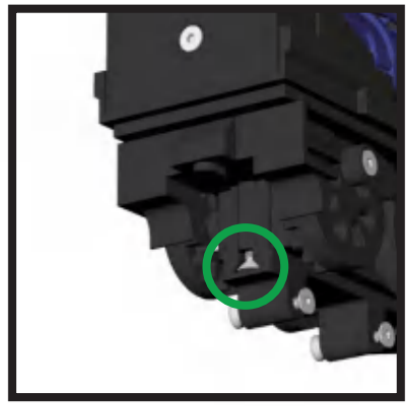

Attach the toy train to the pulley, and confirm that it is securely installed.

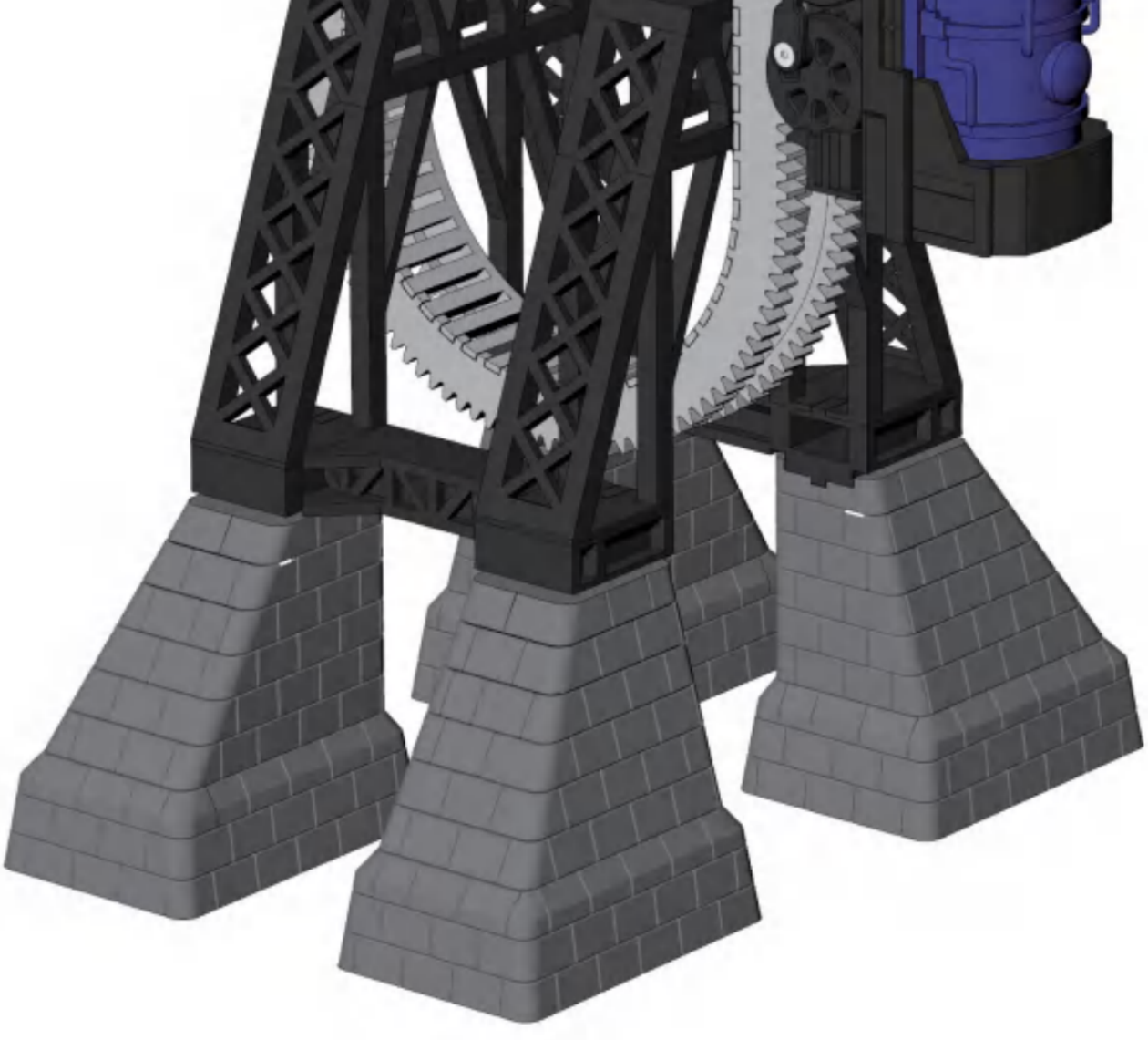

Press start, Start the loop!