NZXT

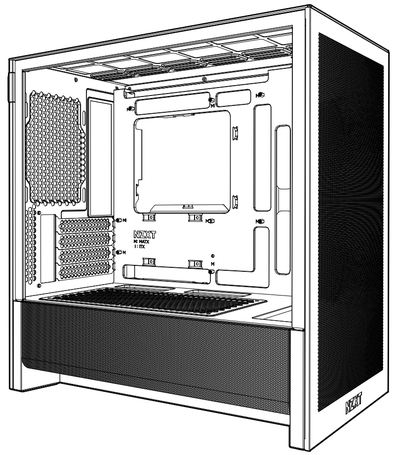

H3 FLOW

MICRO-ATX AIRFLOW CASE

FRONT

FRONTAL | AVANT | FRONT | ANTERIORE | FRONTAL | 전면 | フロント | 正面

COVER

TABLE OF CONTENTS

01. EXPLODED VIEW

02. CLEARANCES & SPECIFICATIONS

03. PANEL REMOVAL

04. ACCESSORY BOX

05. CABLE CONNECTIONS

06. BUTTONS & I/O

07. CABLE MANAGEMENT

BACK

ATRÁS | ARRIÈRE | ZURÜCK | INDIETRO | VOLTAR | 뒷면 | 裏面 | 背面

08. SSD DRIVE INSTALLATION

09. HDD DRIVE INSTALLATION

10. MOTHERBOARD INSTALLATION

11. EXPANSION CARD INSTALLATION

12. POWER SUPPLY INSTALLATION

13. FAN & RADIATOR SUPPORT

14. FAN & RADIATOR INSTALLATION

限用物质及元素列表
限用物質及元素清單

REGULATORY STATEMENT

NZXT GLOBAL WARRANTY POLICY

01. EXPLODED VIEW

VISTA EXPLOSIONADA
VUE ÉCLATÉE
EXPLOSIONSDARSTELLUNG
VEDUTA IN ESPLOSO
VISTA EXPLODIDA
확대도
展開図
部件分解图
部件分解圖

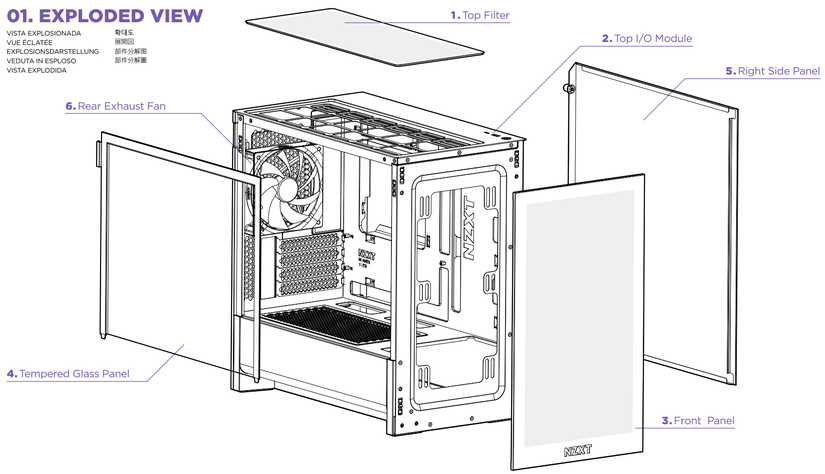

1 . Top Filter	1 . Filtro do topo
2 . Top I/O module	2 . Módulo de entrada/saída superior
3 . Front panel	3 . Painel frontal
4 . Tempered glass panel	4 . Painel esquerdo em vidro temperado
5 . Right side panel	5 . Painel lateral direito
6 . Rear exhaust Fan	6 . Ventoinha de exaustão traseira

1 . Filtro superior	1 . 상단 필터
2 . Módulo de E/S superior	2 . 상단 I/O 모듈
3 . Panel frontal	3 . 전면 패널
4 . Panel de cristal templado izquierdo	4 . 좌측 강화 유리 패널
5 . Panel lateral derecho	5 . 우측 사이드 패널
6 . Ventilador de escape trasero	6 . 후면 배기팬

1 . Filtre supérieur	1 . トップフィルター
2 . Module E/S supérieur	2 . トップ I/O モジュール
3 . Panneau avant	3 . フロントパネル
4 . Panneau gauche en verre trempé	4 . 左強化ガラスパネル
5 . Panneau latéral droit	5 . 右サイドパネル
6 . Ventilateur d'échappement arrière	6 . リア排出ファン

1 . Oberer Filter	1 . 顶部滤网
2 . I/O-Modul an der Oberseite	2 . 顶部 I/O 模块
3 . Frontpanel	3 . 前面板
4 . Linke Hartglasblende	4 . 左边钢化玻璃面板
5 . Rechte Blende	5 . 右边面板
6 . Lüfter für Luftauslass an Rückseite	6 . 后排气扇

1 . Filtro superiore	1 . 頂部濾網
2 . Modulo I/O superiore	2 . 頂部 I/O 模塊
3 . Pannello anteriore	3 . 前面板
4 . Pannello laterale sinistro di vetro temperato	4 . 左側強化玻璃面板
5 . Pannello laterale destro	5 . 右側板
6 . Ventola di scarico posteriore	6 . 後方排風風扇

02. CLEARANCES & SPECIFICATIONS

MEDIDAS Y ESPECIFICACIONES
DÉGAGEMENTS ET SPÉCIFICATIONS
ABSTÄNDE UND TECHNISCHE DATEN
SPAZI NECESSARI E SPECIFICHE
DIMENSÕES E ESPECIFICAÇÕES
간격과 규격
空間と仕様
间距与规格
間距與規格

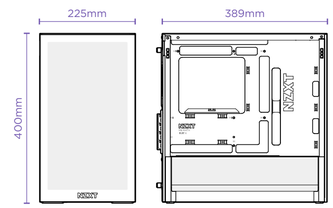

Cartes mère prises en charge	MircATX, MiniITX
Compatible avec les cartes mères à connexion arrière (BTF, Project Zero)	Oui (Micro-ATX)
SSD 2.5"	3
Disques durs 3.5"	1
Fentes d'expansion	4
Espace libre au niveau du refroidisseur de processeur	Up to 170 mm
Longueur du processeur graphique	Jusqu'à 377 mm (sans ventilateurs frontaux) Jusqu'à 314 mm (avec un tout-en-un de 280 mm d'épaisseur 63 mm et des ventilateurs installés à l'avant)
Longueur de l'alimentation	Jusqu'à 185 mm
Espace pour la gestion des câbles	Jusqu'à 31,5 mm
Épaisseur du radiateur avant + ventilateur	Jusqu'à 63 mm
Épaisseur du radiateur supérieur + ventilateur	Jusqu'à 70 mm

Scheda madre supportata	Micro ATX, Mini ITX
Supporta schede madri a connessione posteriore (BTF, Project Zero)	Sì (Micro-ATX)
SDD 2.5"	3
HDD 3.5"	1
Alloggi d'espansione	4
Ingombro refrigeratore per CPU	Fino a 170mm
Lunghezza GPU	Massimo 377 mm (senza ventole frontali) Massimo 314 mm (con AIO da 280 mm spesso 63 mm e ventole installate sulla parte frontale)
Lunghezza alimentatore	Fino a 185mm
Spazio gestione cavi	Fino a 31,5mm
Spessore della ventola e del radiatore frontali	Massimo 63 mm
Spessore della ventola e del radiatore superiori	Massimo 70 mm

マザーボードサポート	MicroATX, MiniITX
背面接続マザーボード対応 (BTF, Project Zero)	あり(Micro-ATX)
2.5"SSDサポート	3
3.5"HDDサポート	1
エクスパンションスロット	4
CPU クーラーのクリアランス	最大: 170 mm
GPU長さ	最大:377 mm(フロントファンなし) 最大:314 mm(厚さ63 mm の280 mm AIOとファンをフロントに設置した場合)
PSU 長さ	最大: 185 mm
ケーブル管理スペース	最大: 31.5 mm
フロントラジエーター+ファンの厚さ	最大: 63 mm
トップラジエーター+ファンの厚さ	最大: 70 mm

Support de la carte mère	Micro-ATX y Mini-ITX
Admite placas base con conectores en la parte trasera (BTF, Project Zero)	Sí (Micro-ATX)
Unidad de estado sólido de 2,5"	3
Unidad de disco duro de 3,5"	1
Ranuras de expansión	4
Espacio para refrigerador del procesador	Hasta 170 mm
Longitud de la GPU	Hasta 377 mm (sin ventiladores en la parte delantera), Hasta 314 mm (con AIO de 280 mm y 63 mm de espesor y ventiladores instalados en la parte delantera)
Longitud de la PSU	Hasta 185 mm
Espacio de cableado	Hasta 31,5 mm
Espesor del radiador y ventilador en la parte delantera	Hasta 63 mm
Espesor del radiador y ventilador en la parte superior	Hasta 70 mm

Placa-principais suportadas	Micro-ATX, Mini-ITX
Suporta Placa Mae com conexão traseira (BTF, Project Zero)	Sim (Micro-ATX)
SSD de 2,5"	3
HDD de 3,5"	1
Ranhuras de expansão	4
Espaço necessário para o refrigerador da CPU	Up to 170 mm
Comprimento Placa Gráfica	Ate 377 mm (sem ventoinhas frontais) Até 314 mm (com AIO de 280 mm y 63 mm de espessura e ventoinhas instaladas à frente)
Comprimento da fonte de alimentação	Até 185 mm
Espaço para gestão de cabos	Até 31,5 mm
Radiador Frontal + Espessura Ventoinha	Até 63 mm
Radiador Topo + Espessura Ventoinha	Até 70 mm

主板支持	Micro ATX, Mini ITX
支持背插式主板 （BTF - Project Zero）	支持 (Micro-ATX)
2.5"SSD支持	3
3.5"HDD支持	1
扩充槽	4
CPU 散热器间隙	最大: 170mm
显卡限长	最长: 377 毫米 (前面板未安装风扇时) 最长: 314 毫米 (前面板安装 63 毫米厚 280 毫米一体式水冷散热器及风扇时)
PSU 长度	最大: 185mm
线缆管理空间	最大: 31.5mm
前面板散热器与风扇厚度限值	最大: 63 毫米
顶部散热器与风扇厚度限值	最大: 70 毫米

Motherboard Support	Micro-ATX and Mini-ITX
Supports Rear-Connecting Motherboards (BTF, Project Zero)	Yes (Micro-ATX)
2.5" SSD Support	3
3.5" HDD Support	1
Expansion Slots	4
CPU Cooler Height	Up to 170 mm
GPU Length	Up to 377 mm (without front fans) Up to 314 mm (with 63 mm thick 280 mm AIO and fans installed at the front)
PSU Length	Up to 185mm
Cable Management Space	Up to 31.5mm
Front Radiator + Fan Thickness	Up to 63 mm
Top Radiator + Fan Thickness	Up to 70 mm

Motherboard-Unterstützung	Micro-ATX, Mini-ITX
Unterstützt Motherboards mit rückseitigem Anschluss (BTF, Project Zero)	Ja (Micro-ATX)
2,5-Zoll-SSD	3
3,5-Zoll-Festplatte	1
Erweiterungssteckplätze	4
Freiraum für CPU-Kühler	Up to 170 mm
GPU-Länge	Bis zu 377 mm (ohne Frontlüfter) Bis zu 314 mm (mit frontseitig installierter 63 mm dicker 280-mm-AIO und Lüftern)
Länge des Netzteils	Bis zu 185 mm
Platz für Kabelmanagement	Bis zu 31,5 mm
Frontradiator- und -lüfter-Dicke	Bis zu 63 mm
Oberseiten-Radiator- und -lüfter-Dicke	Bis zu 70 mm

마더보드 지원	Micro ATX, Mini ITX
후면 연결 마더보드 지원 여부 (BTF, Project Zero)	예(Micro-ATX)
2.5" SSD	3
3.5" HDD	1
확장 슬롯	4
CPU 쿨러 간격	최대 170mm
GPU 길이	최대 377mm(전면 팬 제외) 최대 314mm(전면에 63mm 두께의 280mm AIO와 팬을 장착한 경우)
PSU 길이	최대 185mm
케이블 관리 공간	최대 31.5mm
전면 라디에이터 + 팬 두께	최대 63mm
상단 라디에이터 + 팬 두께	최대 70mm

主板支援	Micro ATX, Mini ITX
支援後置連接主機板 (BTF, Project Zero)	是 (Micro-ATX)
2.5"SSD支援	3
3.5"HDD支援	1
擴充槽	4
CPU 散熱器間隙	最大: 170mm
GPU 長度	最長 377 公釐 (無前置風扇) 最長 314 公釐 (若內安裝 63 公釐厚的 280 公釐 AIO 散熱器和風扇時)
PSU 長度	最大: 185mm
線纜管理空間	最大: 31.5mm
前置散熱器 + 風扇厚度	最長 63 公釐
頂部散熱器 + 風扇厚度	最長 70 公釐

03. PANEL REMOVAL

EXTRACCION DE PANEL
RETRAIT DU PANNEAU
BLENDE ENTFERNEN
RIMOZIONE DEL PANNELLO
REMOÇÃO DOS PAINÉIS
제넬 제거
パネルの取り外し
パネルの取り外し
移除面板

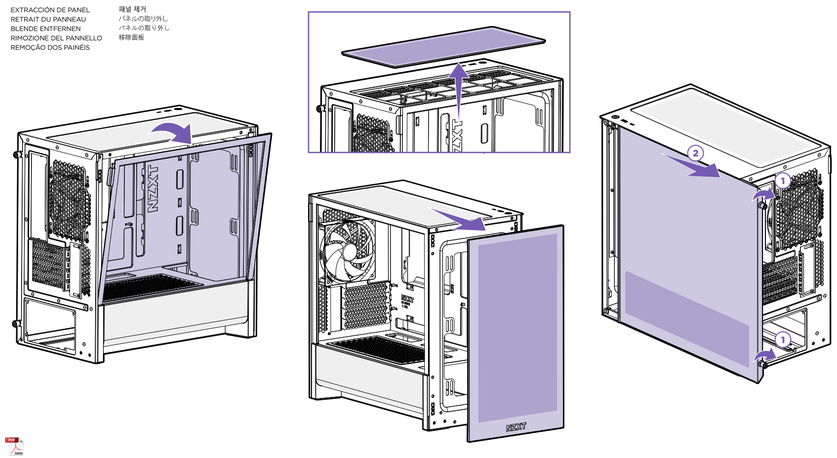

04. ACCESSORY BOX

CAJA DE ACCESORIOS
BOITE D'ACCESSOIRES
ZUBEHÖRSET
SCATOLA DEGLI ACCESSORI
CAIXA DE ACESSÓRIOS
악세사리 박스
部品箱 (説明書入り)
配件盒
零件盒

A	Hexagon Screw 6-32 x 6mm	x4	E Screw 6-32 x 30mm x8
B	Screw 6-32 x 5mm	x17	F Standoff 6-32 x 6.5+4mm x1
C	Screw M3 x 5mm	x12	G Standoff Wrench x1
D	Screw CB5 x 10mm	x16	H Cable ties x10

For Intel Standard F_Panel Header Use

USB 3.2 GEN 2 TYPE-C

USB 3.2 GEN 1 TYPE-A

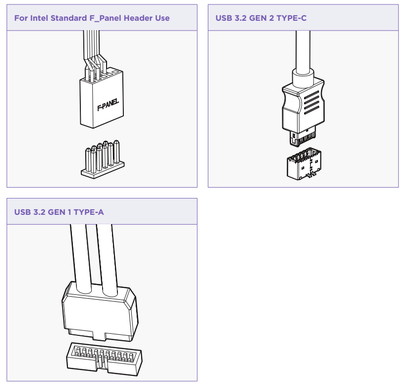

05. CABLE CONNECTIONS

DISCO DE ADMINISTRACIÓN DE CABLES
CONNEXIONS DES CÂBLES
KABELVERBINDUNGEN
COLLEGAMENTI DEI CAVI
LIGAÇÕES DE CABOS
케이블 연결
ケーブル接続
线缆连接
線路連接

06. BUTTONS & I/O

BOTONES Y E/S
BOUTONS ET E/S
TASTEN UND E/A
PULSANTI E I/O
BOTÕES E E/S
버튼 및 I/O
ボタンおよび I/O
按钮和 I/O
按鈕和 I/O

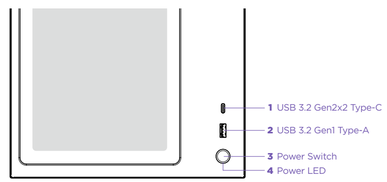

1 . USB 3.2 Gen2x2 Type-C	1 . USB 3.2 Gen2x2 Type-C	1 . USB 3.2 Gen2x2 Type-C
2 . USB 3.2 Gen1 Type-A	2 . USB 3.2 Gen1 Type-A	2 . USB 3.2 Gen1 Type-A
3 . Interruptor de encendido	3 . Interruttore d'alimentazione	3 . 電源スイッチ
4 . LED de alimentación	4 . LED alimentazione	4 . パワーLED

1 . USB 3.2 Gen2x2 Type-C	1 . USB 3.2 Gen2x2 Type-C	1 . USB 3.2 Gen2x2 Type-C
2 . USB 3.2 Gen1 Type-A	2 . USB 3.2 Gen1 Type-A	2 . USB 3.2 Gen1 Type-A
3 . Interrupteur marche/arrêt	3 . Interruptor de alimentação	3 . 电源开关
4 . Témoin d'alimentation	4 . LED de alimentação	4 . 电源LED

1 . USB 3.2 Gen2x2 Type-C	1 . USB 3.2 Gen2x2 Type-C	1 . USB 3.2 Gen2x2 Type-C
2 . USB 3.2 Gen1 Type-A	2 . USB 3.2 Gen1 Type-A	2 . USB 3.2 Gen1 Type-A
3 . Netzschalter	3 . 전원 스위치	3 . 電源開關
4 . Betriebs-LED	4 . 전원 LED	4 . 電源LED

07. CABLE MANAGEMENT

BARRA PARA CABLES
BARRE DE CÂBLAGE
KABELSCHIENE
BARRA DEI CAVI
BARRA DE CABOS
케이블 바
ケーブルバー
理线挡板
整線護板

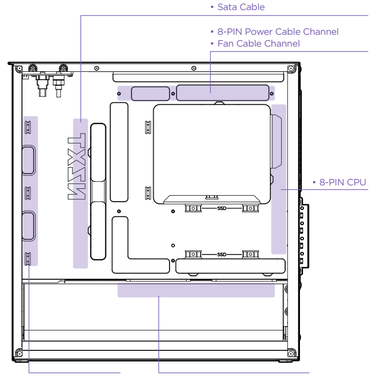

V01

08. SSD DRIVE INSTALLATION

INSTALACIÓN DE LA UNIDAD DE DISCO DE ESTADO SÓLIDO
INSTALLATION DU DISQUE SSD
SSD-LAUFWERKSINSTALLATION
INSTALLAZIONE DELL'UNITÀ SDD
INSTALAÇÃO DA PLACA DE EXPANSÃO
SSD 드라이브 설치
SSD 装着
SSD 驱动器安装
SSD 安装

C	Screw M3 x 5mm

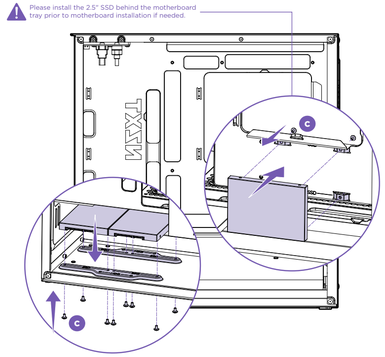

09. HDD DRIVE INSTALLATION

INSTALACIÓN DE LA UNIDAD DE DISCO DURO
INSTALLATION DE LECTEUR HDD
HDD-LAUFWERKSINSTALLATION
INSTALLAZIONE DELL'UNITÀ HDD
INSTALAÇÃO DA PLACA DE EXPANSÃO
HDD 드라이브 설치
HDD 装着
HDD 驱动器安装
HDD 硬碟安裝

B	Screw 6-32 x 5mm

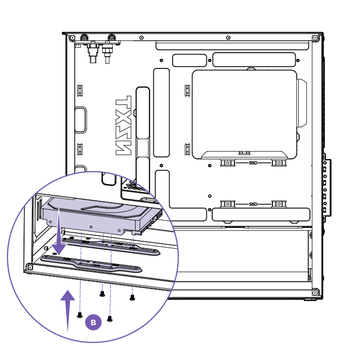

10. MOTHERBOARD INSTALLATION

INSTALACIÓN DE LA PLACA BASE
INSTALLATION DE LA CARTE MÈRE
INSTALLATION DER HAUPTPLATINE
INSTALLAZIONE DELLA SCHEDA MADRE
INSTALAÇÃO DA PLACA PRINCIPAL
마더보드 설치
マザーボードの装着
主板安装
主機板安裝

B	Screw 6-32 x 5mm

M : MATX
I : ITX

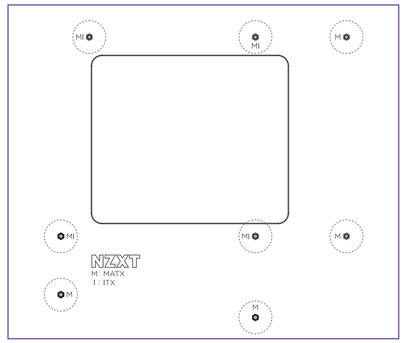

11. EXPANSION CARD INSTALLATION

INSTALACIÓN DE LA TARJETA DE EXPANSIÓN
INSTALLATION DE LA CARTE D'EXTENSION
INSTALLATION DER ERWEITERUNGSKARTE
INSTALLAZIONE DELLA SCHEDA D'ESPANSIONE
INSTALAÇÃO DA PLACA DE EXPANSÃO
확장 카드 설치
拡張カードの装着
扩展卡安装
擴充卡安裝

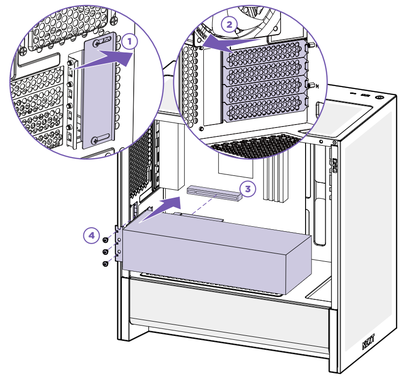

12. POWER SUPPLY INSTALLATION

INSTALACIÓN DE LA FUENTE DE ALIMENTACIÓN
INSTALLATION DE L'ALIMENTATION
INSTALLATION DER STROMVERSORGUNG
INSTALLAZIONE DELL'ALIMENTATORE
INSTALAÇÃO DA FONTE DE ALIMENTAÇÃO
전원공급장치 설치
電源の装着
电源安装
電源安裝

A	Hexagon Screw 6-32 x 6mm

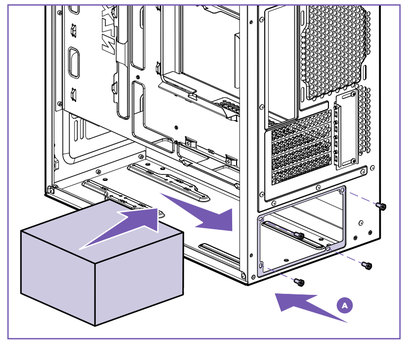

13. FAN & RADIATOR SUPPORT

COMPATIBILIDAD DE VENTILADORES Y RADIADORES
PRISE EN CHARGE DES RADIATEURS ET VENTILATEURS
LÜFTER- UND KÜHLER-UNTERSTÜTZUNG
SUPPORTO VENTOLE E RADIATORE
SUPORTE PARA VENTOINHA E A RADIADOR
팬 및 라디에이터 지원
対応ファンおよびラジエータ
风扇和散热器支持
風扇和散熱排支援

Fan
Radiator

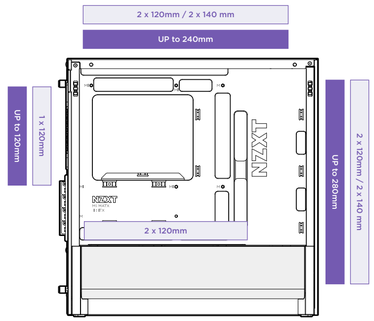

14. FAN & RADIATOR INSTALLATION

INSTALACIÓN DE VENTILADORES Y RADIADORES
INSTALLATION DES RADIATEURS ET VENTILATEURS
LÜFTER- UND KÜHLER-INSTALLATION
INSTALLAZIONE VENTOLE E RADIATORE
INSTALAÇÃO PARA VENTOINHA E A RADIADOR
팬 및 라디에이터 설치
ファンとラジエータの取り付け
风扇和散热器安装
風扇和散熱排安裝

D	Screw CB5 x 10mm
E	Screw 6-32 x 30mm

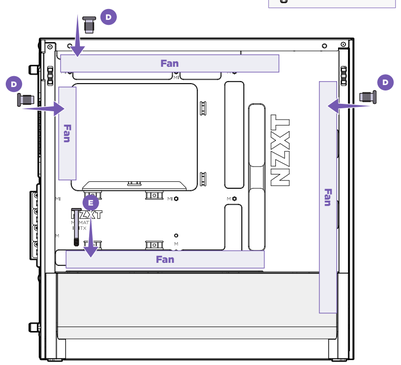

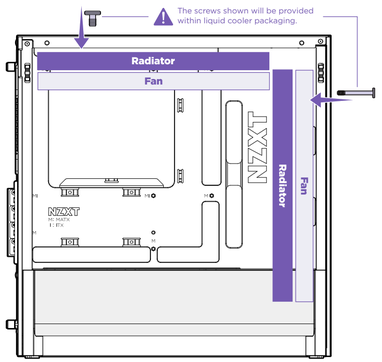

限用物质及元素列表 / 限用物質及元素清單

产品名称：机箱，型號（型式）：CA-2402, CC-H31FW-01, CC-H31FB-01

有害物质及其化学符号

單元	铅(Pb)	镉(Cd)	汞(Hg)	六价铬(Cr⁺⁶)	多溴联苯(PBB)	多溴联苯醚(PBDE)
外壳	○	○	○	○	○	○
硬材	○	○	○	○	○	○
主电路板	○	○	○	○	○	○
变压/线圈	○	○	○	○	○	○
塑胶零件	○	○	○	○	○	○

本表格依据SJ/T 11364的规定编制。
○: 表示该有害物质在该部件所有均质材料中的含量均在GB/T 26572规定的限量要求下。
×: 表示该有害物质至少在该部件的某一均质材料中的含量超出 GB/T 26572 规定的 限量要求,然该部件仍符合欧盟命令 2011/65/EU 的规范。

產品名稱：機箱, 型號（型式）：CA-2402, CC-H31FW-01, CC-H31FB-01

限用物質及其化學符號

單元	鉛(Pb)	鎘(Cd)	汞(Hg)	六價鉻(Cr⁺⁶)	多溴聯苯(PBB)	多溴聯苯醚(PBDE)
外殼	○	○	○	○	○	○
硬材	○	○	○	○	○	○
主電路板	○	○	○	○	○	○
變壓器/線圈	○	○	○	○	○	○
塑膠零件	○	○	○	○	○	○

備考1. "超出0.1wt%"及"超出0.01wt%"係指限用物質之百分比含量超出百分比含量基準值。
備考2. "○"係指該項限用物質之百分比含量未超出百分比含量基準值。
備考3. "－"係指該項限用物質為排除項目。

REGULATORY STATEMENT

RACCOLTA CARTA
PAP

FR Cet appareil, ses accessoires et cordons se recyclent
À DÉPOSER EN MAGASIN
À DÉPOSER EN DÉCHÈTERIE
OU
Points de collecte sur www.quefairedemesdechets.fr

UKCA DECLARATION OF CONFORMITY
The object of the declaration described above is in conformity with the relevant UK harmonization legislation:
- Electromagnetic Compatibility Regulations 2016
- The Restriction of the Use of Certain Hazardous Substances in Electrical and Electronic Equipment Regulations 2012

ROHS STATEMENT
This product is compliant to implemented RoHS (Restriction of Hazardous Substances) type regulations worldwide, including but not limited to China, India, Japan, Korea and European Union.

REACH STATEMENT
EU REACH SVHC Disclosure on Candidate List
REACH (Registration, Evaluation, Authorization and Restriction of Chemicals, EC 1907/2006) is the European Union's (EU) chemical substances regulatory framework. REACH requires NZXT Inc. to provide customers with sufficient information on Substances of Very High Concern (SVHC) contained in products in concentration above 0.1% weight by weight (w/w) to allow safe use of the product.

DECLARATION OF CONFORMITY
The device complies with the requirements set out in the Council Directives relevant Union harmonisation legislation:
- EMC Directive 2014/30/EU
- RoHS Directive 2011/65/EU & (EU) 2015/863

DÉCLARATION DE CONFORMITÉ
L'appareil est conforme aux exigences définies dans les directives du Conseil relatives à la législation d'harmonisation de l'Union :
- Directive EMC 2014/30/UE
- Directive RoHS 2011/65/UE et (UE) 2015/863

DECLARACIÓN DE CONFORMIDAD
El dispositivo cumple los requisitos impuestos en las directivas del Consejo relativas a la legislación de armonización de la Unión Europea:
- Directiva sobre compatibilidad electromagnética 2014/30/UE
- Directiva sobre sustancias peligrosas 2011/65/UE y (UE) 2015/863

DECLARAÇÃO DE CONFORMIDADE
O dispositivo está conforme aos requisitos das Diretivas do Conselho e relevante legislação de harmonização da União Europeia:
- Diretiva EMC 2014/30/UE
- Diretiva RoHS 2011/65/UE & (UE) 2015/863

DICHIARAZIONE DI CONFORMITÀ
Il dispositivo è conforme con i requisiti definiti nelle Direttive del Consiglio relative alla Norma sull'armonizzazione dell'Unione:
- Direttiva EMC 2014/30/UE
- Direttiva RoHS 2011/65/UE e (UE) 2015/863

KONFORMITÄTSERKLÄRUNG
Das Gerät entspricht den Anforderungen der entsprechenden EU-Harmonisierungsrichtlinien des Rates:
- EMV-Richtlinie 2014/30/EU
- RoHS-Richtlinie 2011/65/EU & (EU) 2015/863

ЗАЯВЛЕНИЕ О СООТВЕТСТВИИ
Это устройство отвечает требованиям, изложенным в Директивах Совета о гармонизации соответствующих законов государств, входящих в состав Европейского союза (ЕС):
- Директива 2014/30/EU об электромагнитной совместимости
- Директива 2011/65/EU и (EU) 2015/863 об ограничении использования определенных видов опасных веществ в электрическом и электронном оборудовании (RoHS)

OŚWIADCZENIE ZGODNOŚCI
Urządzenie jest zgodne z wymaganiami określonymi w odpowiednich unijnych Dyrektywach harmonizacyjnych Rady:
- Dyrektywa EMC 2014/30/UE
- Dyrektywa RoHS 2011/65/UE i (UE) 2015/863

PROHLÁŠENÍ O SHODĚ
Zařízení odpovídá požadavkům stanoveným ve směrnicích Rady podle příslušných harmonizačních právních předpisů Unie:
- Směrnice o elektromagnetické kompatibilitě 2014/30/EU
- Směrnice o RoHS 2011/65/EU a (EU) 2015/863

VERKLARING VAN OVEREENSTEMMING
Het apparaat voldoet aan de vereisten van de relevante richtlijnen van de Raad met betrekking tot harmonisatiewetgeving in de Unie:
- EMC-richtlijn 2014/30/EU
- RoHS-richtlijn 2011/65/EU & (EU) 2015/863

MEGFELELŐSÉGI NYILATKOZAT
Az eszköz megfelelő a Tanács irányelvek releváns uniós harmonizációs rendelkezése által felállított követelményeknek:
- 2014/30/EU EMC-irányelv
- 2011/65/EU és (EU) 2015/863 RoHS-irányelv

ДЕКЛАРАЦИЯ ЗА СЪОТВЕТСТВИЕ
Устройството отговаря на изискванията на уместното законодателство на Съюза за хармонизация на директивите на Съвета:
- ЕМС директива 2014/30/ЕС
- RoHS директива 2011/65/ЕС & (ЕС) 2015/863

DEKLARACIJA O USKLAĐENOSTI
Ovaj uređaj sukladan je s odredbama postavljenim u direktivama Vijeća vezanim uz relevantne harmonizacijske zakone Unije:
- EMC Direktiva 2014/30/EU
- RoHS Direktiva 2011/65/EU & (EU) 2015/863

ΔΗΛΩΣΗ ΣΥΜΜΟΡΦΩΣΗΣ
Η συσκευή συμμορφώνεται με τις απαιτήσεις που καθορίζονται στις Οδηγίες του Συμβουλίου του συχνίζονται με τη νομοθεσία περί εναρμόνισης της Ένωσης:
- Οδηγία περί ΗΜΕ 2014/30/ΕΕ
- Οδηγία περί RoHS 2011/65/ΕΕ & (ΕΕ) 2015/863

To protect the global environment and as an environmentalist, NZXT must remind you that:
Under the European Union ("EU") Directive on Waste Electrical and Electronic Equipment, Directive 2002/96/EC, which takes effect on August 13, 2005, products of "electrical and electronic equipment" cannot be discarded as municipal waste anymore and manufacturers of covered electronic equipment will be obligated to take back such products at the end of their useful life. NZXT will comply with the product take back requirements at the end of life of NZXT-branded products that are sold into the EU. You can recover these products to local collection points.

En tant qu'écologiste et afin de protéger l'environnement, NZXT tient à rappeler ceci:
Au sujet de la directive européenne (EU) relative aux déchets des équipement électriques et électroniques, directive 2002/96/EC, prenant effet le 13 août 2005, que les produits électriques et électroniques ne peuvent être déposés dans les décharges ou tout simple-ment mis à la poubelle. Les fabricants de ces équipements seront obligés de récupérer certains produits en fin de vie. NZXT prendra en compte cette exigence relative au retour des produits en fin de vie au sein de la communauté européenne. Par conséquent vous pouvez retourner localement ces matériels dans les points de collecte.

UYUM BEYANI
Aygıt, Konsey Yönergeleri ile ilgili Birlik uyum mevzuatında belirtilen şartlara uygundur:
- EMC Yönergesi 2014/30/EU
- RoHS Yönergesi 2011/65/EU & (EU) 2015/863

OVERENSSTEMMELSESERKLÆRING
Enheden er i overensstemmelse med kravene i Rådets direktiv, relevant til EU's lovgivning om harmonisering:
- EMC-direktiv 2014/30/EU
- RoHS-direktiv 2011/65/EU og (EU) 2015/863

VAATIMUSTENMUKAISUUSVAKUUTUS
Laite on Euroopan neuvoston direktiivien olennaisen unionin harmonisointilainsäädännön vaatimusten mukainen:
- EMC-direktiivi 2014/30/EU
- RoHS-direktiivi 2011/65/EU & (EU) 2015/863

SAMSVARSERKLÆRING
Enheten overholder kravene i EU-rådets harmoniseringsdirektiver:
- EMC-direktiv 2014/30/EU
- RoHS-direktiv 2011/65/EU & (EU) 2015/863

KONFORMITETSDEKLARATION
Enheten uppfyller kraven som anges i Rådets direktiv relevanta harmoniseringslagstiftning för Europeiska unionen:
- EMC-direktivet 2014/30/EU
- RoHS-direktiv 2011/65/EU & (EU) 2015/863

DECLARAȚIE DE CONFORMITATE
Dispozitivul respectă cerințele menționate în Directivele Consiliului și în legislația armonizată relevantă la nivelul Uniunii:
- Directiva privind compatibilitatea electromagnetică 2014/30/UE
- Directiva RoHS 2011/65/UE și (UE) 2015/863

NZXT GLOBAL WARRANTY POLICY

This NZXT Global Warranty Policy governs the sale of products by NZXT to you.

I. WARRANTY LENGTH

New NZXT Product	Warranty Length for Parts
Computer Cases	2 Years

Any replacement product will be covered under warranty for the remainder of the warranty period or thirty days, whichever is longer. Proof of purchase is required for warranty service.

II. WHO IS PROTECTED

The Warranty covers only NZXT products purchased by the original consumer.

III. WHAT IS AND IS NOT COVERED

Please note that our warranty is not an unconditional guarantee. If the product, in NZXT's reasonable opinion, malfunctions within the warranty period, NZXT will provide you at its sole discretion with a repaired or replacement product, either new or refurbished, with a similar function that is equal or greater in value depending on supply. Our warranty does not cover the following:

- any product or serial number/warranty sticker modification applied without permission from NZXT;
- any damage that is not a manufacturing defect;
- damage, deterioration or malfunction resulting from: accident, abuse, misuse, neglect, fire, water, lightning, or other acts of nature, unauthorized product modification or failure to follow instructions included with the product;
- improper installation, unauthorized alterations or modifications, or repair or attempted repair by anyone not authorized by NZXT;
- shipping or transport damage (claims must be made with the carrier);
- normal wear and tear.

NZXT does not warrant that this product will meet your requirements. It is your responsibility to determine the suitability of this product for your purpose. For NZXT Store orders, we cover two way return shipping for all exchanges and returns. For all other authorized dealers, NZXT Support does not cover return shipping and only covers one way shipping from NZXT back to the end user for exchanges. Two way expedited shipping is provided for all PSUs covered under the Less Than Three program, indiscriminate of purchase location, provided the location is an approved NZXT reseller.

IV. EXCLUSION OF DAMAGES (DISCLAIMER)

NZXT's sole obligation and liability under this warranty is limited to the repair or replacement of a defective product with either a new or refurbished product with a similar function that is equal or greater in value at our option. NZXT shall not, in any event, be liable for any incidental or consequential damage, including but not limited to damages resulting from interruption of service and loss of data, business, or for liability in tort relating to this product or resulting from its use or possession.

V. LIMITATIONS OF IMPLIED WARRANTIES

There are no other warranties, expressed or implied, including but not limited to those of merchantability or fitness for a particular purpose. The duration of implied warranties is limited to the warranty length specified in Paragraph I.

VI. TO OBTAIN TECHNICAL SUPPORT

If you have already referenced your product owner's manual and still need help, you may contact us by phone at +1 (800) 228-9395, by email at service@nzxt.com, or visit the NZXT Support site at nzxt.com/customer-support.

VII. HOW TO OBTAIN A WARRANTY SERVICE FROM NZXT

To receive a warranty service for your product when purchased directly from NZXT, you must submit a request via the NZXT Support site outlining the problem. If a technician deems the product defective or requiring testing, you will be required to provide a copy of your proof of purchase, which will enable you to submit a Return Merchandise Authorization "RMA" request.

Once approved, you ̀ll receive an RMA number, upon which you will be asked to ship the defective item back to NZXT with the RMA number clearly marked or labelled on the package. NZXT recommends that appropriate measures are taken to safeguard the product from damage during shipping.

VIII. APPLICABLE LAW AND ADDITIONAL LEGAL RIGHTS FOR CONSUMERS

This warranty gives you specific legal rights. These conditions are governed and construed in accordance with the laws of California (with exception of its conflict of law provisions), and the application of the United Nations Convention of Contracts for the International Sale of Goods is expressly excluded. The non-exclusive jurisdiction of the courts of California is agreed, which means that you may bring a claim to enforce your consumer protection rights in connection with this Global Warranty in the country which you have your habitual residence where you may have additional rights. These rights may vary.

For original consumers who are covered by consumer protection laws or regulations in their country, state, or province of purchase or, if different, their country, state, or province of residence, the benefits conferred by this warranty are in addition to all rights and remedies conveyed by such consumer protection laws and regulations. To the extent that liability under such consumer laws can be limited, NZXT's liability is limited, and its sole option, to repair or replacement, either new or refurbished, with a similar function that is equal or greater in value depending on supply.

In the United Kingdom:

- For NZXT products sold to customers in the UK, during the expected lifespan of your product your legal rights entitle you to the following:
  - Up to 30 days: if your goods are faulty, then you can get an immediate refund.
  - Up to six months: if your goods can't be repaired or replaced, then you're entitled to a full refund, in most cases.
  - Up to six years: if your goods do not last a reasonable length of time you may be entitled to some money back.
- If the person seeking to rely on the guarantee is not the original consumer, the NZXT Warranty will cover the product in relation to that person provided that we able to provide proof of the transfer of the benefit of the guarantee from the original consumer.
- The implied warranties under the Consumer Rights Act 2015 says that your goods must be as described, fit for all purposes for which such goods are usually supplied, and of satisfactory quality.

In the EU:

- If you are a consumer and have your habitual residence in the EU, you additionally enjoy the protection afforded to you by provisions that cannot be derogated from by agreement by virtue of the law where you have your habitual residence.

IX. WARRANTY SERVICE FROM RESELLERS

In the event that a warranty service is sought, you must provide proof of purchase (store receipt or invoice) in order to receive the service and if deemed necessary, repair or replacement product.

In North America:

Within the first 60 days after purchase, please return your product (or for power supplies installed within our enclosures, just the failed power supply) to your dealer or reseller for a replacement. If the product is still within warranty and you can no longer return it to your dealer, please contact NZXT Customer Support (see above) for assistance and instructions. NZXT will not accept returns without prior approval and an RMA number.

In Europe:

Within the first year after purchase, please return your product (or for power supplies installed within our enclosures, just the failed power supply) to your dealer or reseller for a replacement. If the product is still within warranty and you can no longer return it to your dealer, please contact NZXT Customer Support (see above) for assistance and instructions. NZXT will not accept returns without prior approval.

In Australasia:

Within the first two years after purchase, please return your product (or for power supplies installed within our enclosures, just the failed power supply) to your dealer or reseller for a replacement. If the product is still within warranty and you can no longer return it to your dealer, please contact NZXT Customer Support (see above) for assistance and instructions. NZXT will not accept returns without prior approval.
The cost of shipping will be borne at the first instance by you; however, if the purchased item is defective, NZXT will reimburse reasonable postage or transportation of costs.

Outside North America, Europe, and Australasia:

If your product needs to be returned within the warranty period, please contact the retailer or distributor from whom you purchased the product.

X. NZXT.COM STORE RETURNS/EXCHANGE POLICY

Eligible products under this NZXT Warranty qualify for a full refund or exchange only with an authorized RMA number and if the item is returned to the NZXT.com store inventory within 30 days of purchase. Returns are not allowed beyond 30 days of the purchase date. The NZXT.com Store reserves the right to deny any return or exchange. Refunds will be credited to the original method of payment. To initiate a return, simply submit a request via NZXT support site.

> Visit nzxt.com/warranty and support.nzxt.com for information on warranty coverage and service.
> Visite el sitio Web nzxt.com/warranty y support.nzxt.com para obtener información sobre la cobertura y el servicio de la garantía.
> Visitez nzxt.com/warranty et support.nzxt.com pour les informations de la couverture de la garantie et du service.
> Informationen zu Geltungsbereich und Service der Garantie finden Sie unter support.nzxt.com und nzxt.com/warranty.
> Visitare il sito nzxt.com/warranty e support.nzxt.com per informazioni sulla copertura e sul servizio della garanzia.
> Visite nzxt.com/warranty e support.nzxt.com para obter informações sobre a cobertura da garantia e assistência.
> 제품 보증 범위와 서비스 정보를 확인하시려면 nzxt.com/warranty 또는 support.nzxt.com 을 방문해 주시기 바랍니다.
> 保証範囲およびサービスに関する情報については、support.nzxt.com と nzxt.com/warranty にアクセスしてください。
> 请访问 nzxt.com/warranty 和 support.nzxt.com 了解保修范围和服务的信息。
> 請訪問 nzxt.com/warranty 和 support.nzxt.com 了解產品保固範圍和更多服務訊息。

NZXT, Inc. | 605 E Huntington Drive, Suite 213, Monrovia, CA 91016 USA
NZXT Europe GmbH | Ammerthalstrasse 32 Kirchheim bei Muenchen 85551, Germany
NZXT UK Ltd. | First Floor 5 Fleet Place London EC4M 7RD, GB United Kingdom
+1 (800) 228-9395 / service@nzxt.com / nzxt.com