TECHNICAL GUIDE

R-410A
SPLIT-SYSTEM
AIR-COOLED CONDENSING UNITS
AND AIR HANDLERS

YC090-300, YD120-240, and YE090
CONDENSING UNIT MODELS

PC090-180, PD180-240, and PE090
HEAT PUMP UNIT MODELS

NC090-300 and ND120-240
AIR HANDLING UNIT MODELS

NL090-300 and NM120-240
AIR HANDLING UNIT MODELS

7.5 - 25 Ton
60 Hertz

YC/YD/YE/PC/PE Outdoor Units

NC/ND/NL/NM Indoor Units

YC/YD/PC/PD Outdoor Units

Description

Condensing units and heat pumps are completely assembled, piped and wired at the factory to provide a single-piece unit for shipment and rigging. Each unit is pressurized with a holding charge of refrigerant R-410A for storage and/or shipping.

The compact design, clean styling, small footprint, and quiet operation make these condensing units and heat pumps suitable for almost any outdoor location. On rooftops... because they weigh much less than a single package unit of similar capacity and are much easier to rig and support. On the ground... because the footprint is compact allowing a variety of applications.

Both the condensing units and heat pumps are equipped with reliable Smart Equipment™ microprocessor controls to assure proper operation and unit protection for long product life. Products from 10 to 20 tons are available in single or dual (2 or 4 pipe) refrigerant circuits for redundancy in operation and various applications.

The air handling units are completely assembled units, including a well-insulated cabinet, a DX cooling coil with copper tubing, aluminum fins, expansion valve(s), distributor(s), 2” throwaway filters, a centrifugal blower, a blower motor, an adjustable belt drive, a blower motor contactor and a small holding charge of nitrogen.

Units are shipped in the vertical position ready for field installation, but can be easily converted to horizontal position. An added benefit of the air handling units is they are designed to operate with either a condensing unit or a heat pump and no field modification or special unit is required for heat pump applications.

AHRI CERTIFIED™
www.ahridirectory.org
Unitary Large AC
AHRI Standard 340/360

(Except YC300)

AHRI CERTIFIED™
www.ahridirectory.org
Unitary Large HP
AHRI Standard 340/360

Table of Contents

Description 1
Table of Contents 2
Nomenclature 3
Condensing Unit Features and Benefits 4
Outdoor Unit Accessories 5
Air Handling Unit Features and Benefits 5
Guide Specifications 6
Physical Data 9
Unit Limitations 14
Cooling and Heating Ratings 16
Capacity Performance 17
Air Handling and Hot Water Coil Accessory Heating Capacity 57
Air Handling and Steam Coil Accessory Heating Capacity 57
Airflow Performance 58
Sound Performance 68
Electrical Data 69
Typical Wiring Diagrams 78
Weights And Dimensions 100

Nomenclature

Configured Split Condenser Model Number Nomenclature

Y C 300 C00 A 2 A AA 2 A

Product Category
Y = Split System, Condenser, AC, R-410A
P = Split System, Condenser, HP, R-410A

Product Identifier
C = Standard Efficiency, 2-pipe
D = Standard Efficiency, 4-pipe
E = Standard Efficiency, 2-pipe, 2 stage

Nominal Cooling Capacity - MBH
090 = 7.5 Ton
120 = 10 Ton
150 = 12.5 Ton
180 = 15 Ton
240 = 20 Ton
300 = 25 Ton

Heat Type & Nominal Heat Capacity
C00 = Cooling Only

Airflow
A = Standard Motor

Voltage
2 = 208/230-3-60
4 = 460-3-60
5 = 575-3-60[1]

1. 575 Volt PC Not Offered.

Installation Options
A = None
B = Option 1
D = Options 1 & 2
G = Options 1 & 3
J = Options 1, 2 & 3
Q = Options 1, 3 & 5
T = Options 1 & 5

Options
1 = Disconnect
2 = Non Pwr'd Conv Outlet
3 = BACnet MS/TP on Smart Equipment™
5 = Pwr'd Conv Outlet

Product Options
AA = None
AB = Phase Monitor
AC = Coil Guard
AE = Phase Monitor + Coil Guard
EA = E-Coat Condenser Coil
EB = E-Coat Condenser Coil + Phase Monitor
EC = E-Coat Condenser Coil + Coil Guard
EE = E-Coat Condenser Coil + Coil Guard + Phase Monitor
LA = Low Ambient
LB = Low Ambient + Phase Monitor
LC = Low Ambient + Coil Guard
LD = Low Ambient + Phase Monitor + Coil Guard
LJ = Low Ambient + E-Coat Cond. Coil
LK = Low Ambient + E-Coat Cond. Coil + Phase Monitor
LL = Low Ambient + E-Coat Cond. Coil + Coil Guard
LM = Low Ambient + E-Coat Cond. Coil + Phase Monitor + Coil Guard

Product Generation
1 = First Generation
2 = Second Generation

Product Style
A = Style A
B = Style B

Configured Split Air Handler Model Number Nomenclature

N C 240 C00 B 6 A AA 3 A

Product Category
N = Split System, Air Handler, AC & HP R-410A

Product Identifier
C = Standard Efficiency, 2-Pipe, R-410A
D = Standard Efficiency, 4-Pipe, R-410A

Nominal Cooling Capacity - MBH
090 = 7-1/2 Ton Avialable in 2-Pipe Only
120 = 10 Ton
180 = 15 Ton
240 = 20 Ton
300 = 25 Ton[3]

Heat Type & Nominal Heat Capacity
C00 = Cooling Only

Airflow
B = 1.5 HP Motor
C = 2.0 HP Motor
D = 3.0 HP Motor
E = 5.0 HP Motor
F = 7.5 HP Motor
N = None (Motor Drive Kit Reg)[1]

1. Motors are not shipped with 25 ton AH units.
2. Models NC/ND240 Airflow Option "F" Only.
3. ND 300 Not Offered

Voltage
2 = 208/230-3-60[2]
4 = 460-3-60[2]
5 = 575-3-60
6 = 208/230/460-3-60

Installation Options
A = None

Product Options
AA = No Options Installed
EJ = E-Coat Evaporator Coil

Product Generation
1 = First Generation
2 = Second Generation
3 = Third Generation

Product Style
A = Style A

Configured Split Air Handler Model Number Nomenclature

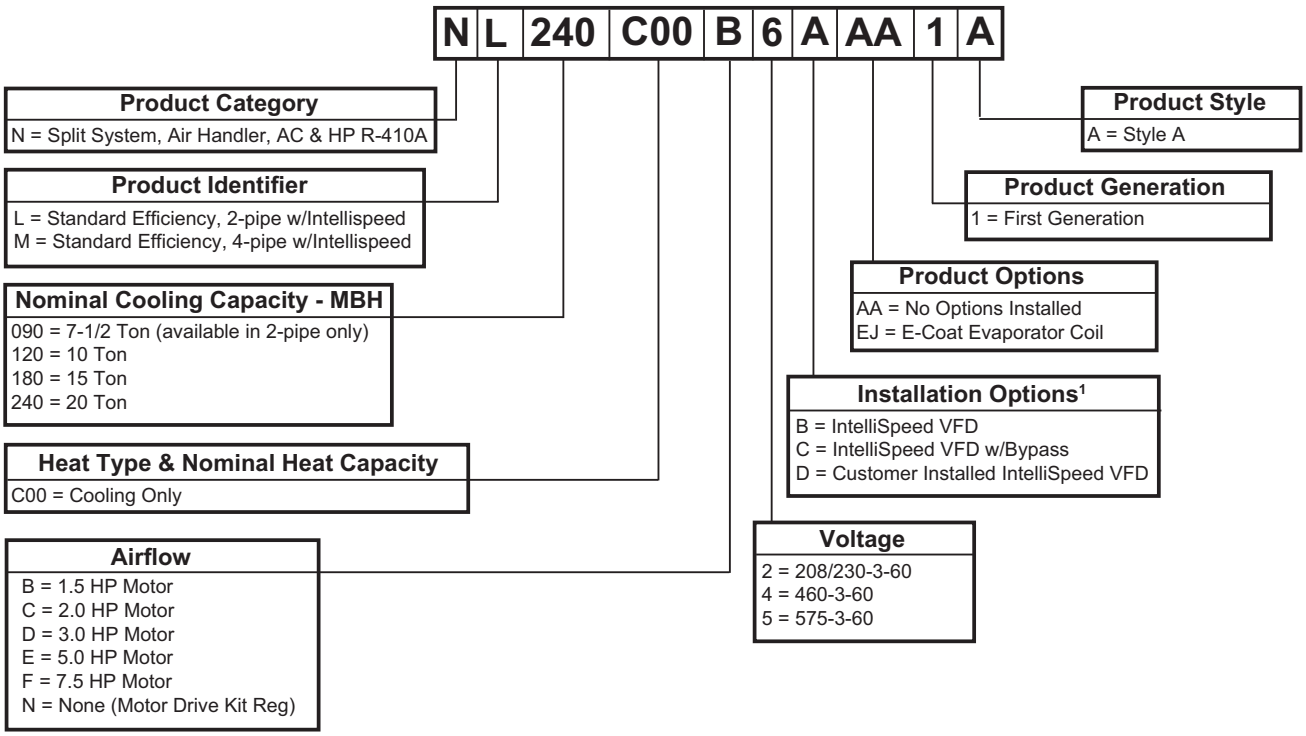

1. In order for the IntelliSpeed option to function properly some field programming will be required. See unit installation manual for details.

Condensing Unit Features and Benefits

Features

- Meets or exceeds ASHRAE 90.1 standards.
- Scroll compressors provide both high efficiency and reliability. Single two-stage scroll available on the 7.5 ton OD unit.
- Smart Equipment™ Controls
- Dual refrigerant circuits on PD and YD models.
- Condensing unit coils are constructed of reliable and durable Micro-Channel aluminum tube and fins for long lasting, efficient operation. Micro-Channel technology provides exceptional durability along with reduced product weight and less refrigerant charge. Heat pumps units are equipped with aluminum fin, copper tube coils providing durability, reliability and value.
- Crankcase heaters that de-energize when compressors are operating.
- Both high and low pressure controls. Since these controls are self-contained, there are no capillary lines to be damaged.
- Internal compressor motor protection.
- Class 2, 24-volt thermostat control circuit protected by a re-settable breaker.
- Standard factory installed service valves.
- Filter-driers are shipped in the unit's control box for field installation in the liquid line leaving the outdoor unit.
- Copper stub-outs are factory mounted on the suction and liquid lines to simplify the field piping connections.
- Smart Equipment™ Controls provide stable cooling operation at ambient temperatures down to 45°F with low ambient kits available for operation to 0°F.
- Capacity staging for more economical operation and stable temperature levels within the conditioned space.
- Smart Equipment™ Controls control board uses a three times, you're out philosophy. The high, low-pressure switch, anti-freeze protection, low voltage or heating high limit must trip three times within two hours before the unit control board will lock out the associated compressor. An alarm message will be displayed on the LCD screen
- Smart Equipment™ Controls monitor each safety independently (High pressure, low pressure, low voltage) allowing ease of troubleshooting if any problems arise.
- Inherently protected condenser fan motors.
- E-coat coated outdoor coils for sea coast or corrosive environment applications.

- Factory installed disconnect to allow power to be removed from the unit when performing periodic maintenance or for service.
- Factory installed powered or non-powered 115 volt GFI outlet.
- Factory installed phase monitor to protect the unit from phase loss or phase reversal.

Benefits

The condensing units and heat pumps can be applied on a rooftop or at ground level... due to their ample sub-cooling capacity which allows them to be located three or more stories below the evaporator coil.

After assembly, the unit is pressurized with a combination of Refrigerant R-410A and nitrogen for pressure testing and additional leak testing. During this pressure test, the operation of the high pressure control is checked. As the unit is being evacuated and dehydrated, the operation of the low pressure control is also checked.

Every compressor, condenser fan motor, crankcase heater, and electrical control circuit is checked to assure a trouble-free start-up and years of reliable operation. The condenser fan guards are vinyl-coated to provide additional rust protection and to enhance the appearance of the unit. Compressors are mounted on rubber isolators to reduce the transmission of vibration. Vertical discharge condenser fans direct sound upward and away from any surrounding structures.

All sheet metal parts are constructed of commercial grade galvanized steel. After fabrication, each part is thoroughly cleaned to remove any grease or dirt from its surfaces. The external parts are coated with a powder paint to assure a quality finish for many years. This UL approved coating system has passed the 750-hour, 20% salt spray test per ASTM Standard B117.

All condensing unit and heat pump models include a 5-year limited warranty on the compressor(s) and 1-year limited warranty on all other parts. The matching line of air handling units carries a 1-year limited parts warranty.

Outdoor Unit Accessories

Coil Guards: Wire-form coil guards for added protection of outdoor coils. Designed to mount on each side of the product if required to provide protection from minor impacts or large debris.

Hail Guards: Hood type hail guards designed to protect the outdoor coils from hail. Can be installed on a single side or both to provide protection from storms that may produce hail.

Low Ambient Kits: Kits designed to allow the cooling only units to operate between 0°F and 40°F in the cooling mode. Standard cooling is allowed to 45°F. (Not designed for operation on heat pump units).

Air Handling Unit Features and Benefits

Features

These air handlers can be arranged for a variety of air discharge patterns in either the horizontal or vertical position. Refer to the unit installation instructions for other application possibilities.

Benefits

Air handling units are designed with two distinct modules to provide maximum application flexibility. All are shipped as single packages with the blower module mounted on top of the coil module. The blower module can be repositioned in the field to meet a large number of vertical and horizontal applications.

The 7.5 thru 20 Ton blower module includes the blower wheels along with factory-mounted motor and drive. The 25 Ton blower module includes the blower wheels with field mounted motor and drives. All models offer two motor horsepower options to meet both standard and high static airflow requirements.

The coil module includes direct expansion coils, 2 in. throwaway filters with the option to accept 4” filters (25 Ton 2” only), liquid line solenoid valves for capacity reduction, thermal expansion valves, distributors and a non-corrosive, composite condensate drain pan.

After the headers are brazed onto the coil and the coil is installed in the unit, the coil is pressurized with nitrogen for pressure testing and additional leak testing. After the coil is evacuated and dehydrated, it is pressurized with a holding charge of nitrogen for storage and/or shipping.

These air handlers, combined with condensing units, provide years of quiet, efficient and dependable operation.

Unit Installation

Units may be bottom-supported or ceiling-suspended and can be arranged to meet almost any space or duct requirements. Each unit is available with a choice of blower motors horsepower and other accessories to make them suitable for most applications.

Air Handling units from 10 to 20 tons are available in either two or four pipe configurations. 7.5 and 25 ton are two pipe (only) configurations. The dual and single circuit options provide a wide variety of application and unit match-up possibilities.

Blower Motors: Different HP motors are available for each unit to meet almost any air delivery requirement. All motors are UL approved, have permanently lubricated ball bearings and are mounted within the insulated cabinet of the units to minimize the transmission of sound to the surrounding space. 1.5-5 HP motors are inherently protected. 7.5 HP motors require motor overload protection.

Overload Relay (7.5 HP): These blower motors do not have inherent protection and require external motor overload protection. NC/ND240 "F" models overload relays are factory installed. NC300 models overload relays are field installed. Power wiring for blower motor is supplied in the overload

relay kit. See details in the overload relay kit and *NC300 Overload Relay Setting (All)* on page 63.

Factory-Mounted Components

Part Load Operation: These air handlers with DX (Direct Expansion) coils rated at 10 tons of capacity and above have multiple coils with pre-piped distributors, expansion valves and solenoid valves. Field modifications are not required for part load operations. Capacity reduction not only provides economical operation, but also maintains stable temperature and humidity levels in the conditioned space.

BAS Control: Smart Equipment™ with Communication Option Control - The York® Smart Equipment™ with Communication Option Control is factory installed. It includes all the features of the Smart Equipment™ control with an additional gateway to BACnet MS/TP (programmable to Modbus or N2 protocols).

IntelliSpeed™ Supply Fan Control Option: (ASHRAE 90.1 Compliant) AHU units configured with the IntelliSpeed option will contain a VFD for multi-speed supply fan operation. This option allows the supply fan RPM to vary based on the number compressors or heating stages energized.

Easy Service: Serviceable expansion valves are provided on every unit. These valves are factory-installed to provide many years of trouble-free operation. The expansion valves also include a tee fitting to allow easy installation of hot gas bypass if required.

Coil Protection: The indoor coils of these air handlers can have factory applied Electrofin coating to provide extended life to the indoor coil in standard applications and additional corrosion protection on those applications in sea coast or corrosive environments.

Accessories

IntelliSpeed™ VFD: Field installed VFD for 25 ton AHU IntelliSpeed multi-speed fan function. The field installed VFD will allow staged fan and will meet ASHRAE 90.1 or IECC two speed fan requirements.

Base Sections: Base sections can be used to elevate units above the floor. If desired, a moderate percentage of outdoor air may be introduced through these sections by cutting an access opening to accommodate the outdoor air duct connection. These bases include a durable finish to match the evaporator blower unit. The base may have to be insulated for certain applications.

Hot Water Coils: Drain-able water coils are available for field installation between the blower and the coil modules of both horizontal and vertical units. Since their casings match the dimensions and the finish of the basic units, they become an integral part of the unit after installation. The coils slide out of their casings for easy installation. Hot water coils have copper tubes that have been mechanically expanded into aluminum fins. Both headers are located on the same end of the coil.

Steam Coils: Steam coils are available for installation between the blower and coil modules of both horizontal and vertical units. Since the casing matches the dimensions and the finish of the basic unit, it becomes an integral part of the unit after installation. The coil slides out of the casings for easy installation and is pitched in the casings to facilitate condensate drainage. The coil has copper tubes that have been mechanically expanded into aluminum fins. Both headers are located on the same end of the coil. The coil is leak-tested at 325 psig and dried before the connections are capped for storage and shipping.

Bottom Return: Air handling unit can be quickly converted to bottom return for both vertical and horizontal applications. All that is required is the removal of several screws and a single panel on 7.5-15 ton and two panels on the 20 ton AHU. Optional painted panel can be ordered to cover the side return opening when utilizing the bottom return.

Supply Air Plenums: These fully insulated plenums are available for free standing units located within the conditioned space. They are shipped fully assembled for easy field installation, are finished to match the exterior of the basic unit, and include double deflection grills that can be adjusted to vary the throw, spread and drop of the supply air.

Guide Specifications

Split System Cooling Only Condensing Units Models: YC090-300, YD120-240, YE090 & Split System Heat Pump Models: PC090-180, PD180-240, PE090

General

- Factory assembled, single piece, air cooled condensing unit designed for outdoor installation.
- Factory wired, piped, and tested for leakage and functionality to assure trouble-free installation and start-up.
- Rated in accordance with AHRI Standard 340/360.
- Designed and tested in accordance with ASHRAE 15 Safety Code for Mechanical Refrigeration and comply with NEC.
- Cooling performance rated in accordance with DOE and AHRI test procedures.
- CSA listed and classified to UL 1995/CAN/CSA No. 236- M90 standards.
- One year limited parts warranty on complete unit with an additional four year compressor warranty.

Unit Operating Characteristics

Operating Range shall be between 125° F to 40° F in cooling as standard from factory.

- The capacity of the condensing unit shall meet or exceed _____ Btuh at a suction temperature of _____ F. The power consumption at full load shall not exceed _____ kW.
- The combination of the condensing unit and the evaporator or fan coil unit shall have a total net cooling capacity of _____ Btuh or greater at conditions of _____ cfm entering-air temperature at the evaporator at

_____ F wet bulb and _____ F dry bulb, and air entering the condensing unit at _____F.

- The system shall have an EER of _____ Btuh/ Watt or greater at standard AHRI conditions.

Installer Shall

- Furnish York® air-cooled condensing units, heat pump or equivalent in accordance with the performance schedule shown on the plans, and
- Unit shall be stored and handled in accordance with unit manufacturer's instructions.
- Install each unit as shown on the plans in accordance with the manufacturer’s recommendations and all applicable national and local codes

Unit Construction

- Constructed of zinc-coated, galvanized steel.
- Exterior surfaces bonded and coated with baked enamel finish by a powder paint process capable of withstanding a minimum of 750 salt spray hours according to ASTM B117.
- Cabinet screws that comply with ASTM B117 salt spray test for a minimum of 750 hours.
- Permanently attached heavy-gage perimeter base rails with forklift slots and lifting holes.
- Removable access panels to all internal components.
- Separate access panel to controls.
- Access panels to allow outdoor coil cleaning.

Compressor(s)

- Hermetic scroll type, internally protected with high-pressure relief and over temperature protection.
- Two stage units operate in 50% capacity increments.
- Suction gas cooled
- Voltage range of ±10% of unit nameplate voltage.
- Neoprene isolators minimize sound transmission and vibration.
- Belly-band crankcase heaters keep refrigerant from diluting sump oil.
- Full charge of compressor oil

Outdoor Condenser Unit Coils

- Draw thru configuration
- Constructed with Micro-channel aluminum fins and aluminum tubing.

Heat Pump Unit Outdoor Unit Coils

- Draw thru configuration
- Constructed with aluminum plate fins mechanically bonded to seamless internally enhanced copper tubes with all joints brazed.

Condenser Fans

- Direct driven propeller-type fans
- Aluminum blades riveted to corrosion resistant steel spider brackets.
- Arranged for vertical air discharge.
- Equipped with PVC coated steel wire safety guards.

Condenser Motors

- Totally enclosed, air over cooled.
- Inherent overload protection.
- Permanently lubricated bearings.
- Must cycle to allow cooling operation down to 45°F.

Refrigerant Piping

- Solid core filter-drier(s) ship loose for field installation.
- Liquid and suction line service valves with gauge ports.
- Suction and discharge line service ports accessible from unit. Ports capped for leak prevention.
- Liquid line magnetic check valves
- Holding charge of R410A refrigerant.

Electrical Requirements

- Single-point connection electrical power.
- Nominal unit electrical characteristics shall be _____ v, 3-ph, 60 Hz. The unit shall be capable of satisfactory operation within voltage limits of ____ v to _____ v.
- Condenser fan motors and secondary of transformers shall be grounded.

Unit Controls

- All 24-volt control circuit, powered by a 24 volt transformer(s) and protected by a resettable breaker.
- Conventional thermostat must provide operation for both condensing units and heat pumps without an “O” output from the thermostat.
- Low voltage terminal strip for simple hook-up.
- Compressor motor protection shuts down unit for motor over-current, over-temperature or low voltage conditions.
- Safety lockouts provide reset capability at the space thermostat or base unit should any of the following standard safety devices trip and shut off compressor:

a. Loss-of-charge/Low-pressure switch.

b. High-pressure switch.

c. Control board diagnostics and fault message display.

d. Safety lockouts send a 24 volt signal to the control board's "X" terminal, allowing notification to the user via the thermostat fault light (if present).

e. In the unlikely event any faults should occur, the unit control board will store the faults in its internal memory. The LCD display will scroll the 5 MOST critical faults, however, all fault messages can be extracted via USB device, displayed real-time via the MAP Gateway as well as be broad-casted through a BAS system (if applicable). The UCB will provide fault messages in plain English to ensure the user can easily understand the specific fault.

Non-fused Disconnect Switch

- Factory-installed, internally mounted.
- Accessible from outside the unit.
- NEC and UL approved non-fused switch.
- Provides power off lockout capability.

Convenience Outlet

- Factory-installed, internally mounted.
- Accessible from outside the unit.
- 115V, 15 amp GFI receptacle with independent fuse protection.
- Required voltage provided by factory-installed step-down transformer or field supplied 115v circuit.

Low-ambient Head Pressure Control

- Standard operation down to 45 °F without a low ambient kit.
- Operation down to 0°F with a factory-installed or field-installed low ambient kit accessory. The controller modulates the fan motor speed in response to liquid line temperature or pressure.

Coil Guard

Factory or field installed decorative grille shall be placed on the units to protect condenser coil after installation.

Hail Guard Package

Field installed hail guard package shall protect coils against damage from hail and other flying debris.

Coated Condenser Coils

Special phenolic or epoxy polymer coating available as a factory option on both outdoor and indoor coils.

Each Unit Shall Be:

- Covered by a 1-year limited parts warranty on the complete unit and 5-year on compressor(s).
- In current production with published literature available to check performance, limitations, specifications, power requirements, dimensions, operation and appearance.
- Indoor unit shall be equipped with a V-belt drive option that will permit the blower RPM to be adjusted to meet the CFM requirements of the air delivery system. (Refer to Technical Guide for Airflow Capabilities.)

Each Unit Enclosure Shall Have:

- Exterior panels of 18 gauge steel, finished with baked enamel to provide a long lasting quality appearance
- Removable panels to provide easy access to the internal components for maintenance and service on condensing units, heat pumps and air handlers
- Air handling units must have a filter rack that accepts both 2” and 4” filters (7.5 - 20 Ton only).
- The dimensions of each unit shall not exceed those specified in the manufacturers literature.
- The minimum application clearances for condensing units, heat pumps and air handlers must meet those specified in the manufacturer’s literature.

The Blower Motor Shall:

- Be mounted within the insulated cabinet to minimize the transmission of sound to the surrounding space, and any motor 7.5 HP or greater must have a service factor of 1.15.

IntelliSpeed discrete fan control shall:

- Control fan speed with a VFD (Variable Frequency Drive)
- Drive fan speed based on the number of cooling or heating stages.
- Maximum airflow on first stage cooling not to exceed 67%.

The Evaporator Coil Shall:

- Consist of copper tubes arranged in staggered rows, mechanically expanded into aluminum fins,
- Be draw-through, and
- Include factory-mounted distributors, expansion valves and solenoid valves for capacity reduction.

The Blower Wheels Shall:

Be dynamically balanced to minimize the levels of sound and vibration generated by the unit.

Physical Data

YC090-300, YD120-240, YE090 Physical Data

Component		Models										
		YC090	YE090	YC120	YD120	YC150	YD150	YC180	YD180	YC240	YD240	YC300
Nominal Tonnage		**7.5**	**7.5**	**10**	**10**	**12.5**	**12.5**	**15**	**15**	**20**	**20**	**25**
Refrigerant												
Refrigerant type		R-410A	R-410A	R-410A	R-410A	R-410A	R-410A	R-410A	R-410A	R-410A	R-410A	R-410A
Holding charge (lb)[1]		1.0	1	1.0	1.0	1.0	1.0	1.0	1.0	1.0	1.0	1.0
Operating charge (lb)[2]	System #1	14.0	14.8	19.25	9.9	24.0	11.5	27.0	13.5	33.5	18.8	35
	System #2	---	---	---	9.9	---	11.5	---	13.5	---	18.8	---
Dimensions (inches)												
Length		59.1	59.1	59.1	59.1	59.1	59.1	59.1	59.1	59.1	59.1	59.1
Width		31.9	31.9	31.9	31.9	31.9	31.9	64.1	64.1	64.1	64.1	64.1
Height		44.5	44.5	50.0	50.0	50.0	50.0	44.5	44.5	50.0	50.0	50.0
Weights (lb)												
Shipping		390	386	499	493	499	493	914	903	945	930	945
Operating		387	383	497	490	497	490	909	898	942	927	942
Compressors[3]												
Type		Single Scroll	Single Scroll	Tandem Scroll	Single Scroll	Tandem Scroll	Single Scroll	Tandem Scroll	Single Scroll	Tandem Scroll	Single Scroll	Tandem Scroll
Quantity		1	1	1	2	1	2	1	2	1	2	1
Nominal capacity (tons)	System #1	7.5	7.5	10	5	12.5	6.3	15	7.5	20	10	25
	System #2	---	---	---	5	---	6.3	---	7.5	---	10	---
Capacity stages	System #1	1	2	2	1	2	1	2	1	2	1	2
	System #2	---	---	---	1	---	1	---	1	---	1	---
Unit Capacity Steps (%)	Stage #1	---	60	---	---	---	---	---	---	---	---	---
	Stage #2	---	100	---	---	---	---	---	---	---	---	---
System data												
No. refrigeration circuits		1	1	1	2	1	2	1	2	1	2	1
Suction line OD (in.)		1 1/8	1 1/8	1 3/8	1 1/8	1 3/8	1 1/8	1 5/8	1 1/8	1 5/8	1 3/8	1 5/8
Liquid line OD (in.)		5/8	5/8	7/8	5/8	7/8	5/8	7/8	5/8	7/8	5/8	7/8
Outdoor coil data												
Face area (Sq. Ft.)		23.8	23.8	29.0	29.0	29.0	29.0	47.5	47.5	58.1	58.1	58.1
Rows		1	1	1	1	1	1	1	1	1	1	1
Fins per inch		23	23	23	23	23	23	23	23	23	23	23
Tube diameter (in./MM)		0.71 / 18	0.71 / 18	0.71 / 18	0.71 / 18	0.71 / 18	0.71 / 18	0.71 / 18	0.71 / 18	0.71 / 18	0.71 / 18	0.71 / 18
Circuitry type		2-pass	2-pass	2-pass	2-pass	2-pass	2-pass	2-pass	2-pass	2-pass	2-pass	2-pass
Refrigerant control		---	---	---	---	---	---	---	---	---	---	---
Condenser fan data												
No. fans/diameter (in.)		2/24	2/24	2/24	2/24	2/24	2/24	4/24	4/24	4/24	4/24	4/24
Type		Axial	Axial	Axial	Axial	Axial	Axial	Axial	Axial	Axial	Axial	Axial
Drive type		Direct	Direct	Direct	Direct	Direct	Direct	Direct	Direct	Direct	Direct	Direct
No. speeds		1	1	1	1	1	1	1	1	1	1	1
Number of motors	System #1	2	2	2	2	2	2	4	2	4	2	4
	System #2	---	---	---	---	---	---	---	2	---	2	---
Motor HP (ea.)		1/3	1/3	3/4	3/4	3/4	3/4	1/3	3/4	3/4	3/4	3/4
Rotation[4]		CW	CW	CW	CW	CW	CW	CW	CW	CW	CW	CW
RPM		850	850	1100	1100	1100	1100	850	1100	1100	1100	1100
Nominal CFM	System #1	7500	7500	9800	9800	9800	9800	15000	9800	19600	9800	19600
	System #2	---	---	---	---	---	---	---	9800	---	9800	---

1 Holding Charge is the amount in the unit as shipped from the factory.
2 Includes matched indoor blower unit with 25 ft of piping.
3 All compressors include crankcase heaters.
4 When viewing the shaft end of the motor.

PC090-180, PE090, and PD180-240 Physical Data

Component		Models					
		PC090	PE090	PC120	PC180	PD180	PD240
Nominal Tonnage		**7.5**	**7.5**	**10**	**15**	**15**	**20**
REFRIGERANT							
Refrigerant type		R-410A	R-410A	R-410A	R-410A	R-410A	R-410A
Holding charge (lb)[1]		1.0	1.0	1.0	1.0	1.0	1.0
Operating Charge (lb)[2]	System #1	23.9	24.12	31.12	54.0	27.0	34.0
	System #2	---	---	---	---	27.0	34.0
DIMENSIONS (inches)							
Length		59.1	59.1	59.1	59.1	59.1	59.1
Width		31.9	31.9	31.9	64.1	64.1	64.1
Height		44.5	44.5	50.0	44.5	44.5	50.0
WEIGHTS (lb)							
Shipping		421	442	574	947	921	1090
Operating		430	445	605	968	942	1126
COMPRESSORS[3]							
Type		Single Scroll	Single Scroll	Tandem Scroll	Tandem Scroll	Single Scroll	Single Scroll
Quantity		1	1	1	1	2	2
Cooling							
Nominal Capacity (Tons)	System #1	7.5	7.5	10	15	7.5	10
	System #2	---	---	---	---	7.5	10
Capacity Stages	System #1	1	2	2	2	1	1
	System #2	---	---	---	---	1	1
Unit Capacity Steps (%)	Stage #1	---	60	---	---	---	---
	Stage #2	---	100	---	---	---	---
Heating							
Nominal Capacity (Tons)	System #1 & #2	7.5	7.5	10	15	15	20
Capacity Stages	System #1 & #2	1	2	1	1	1	1
SYSTEM DATA							
No. Refrigeration Circuits		1	1	1	1	2	2
Suction Line OD (in.)		1 1/8	1 1/8	1 3/8	1 5/8	1 3/8	1 3/8
Liquid Line OD (in.)		5/8	5/8	7/8	7/8	5/8	5/8
OUTDOOR COIL DATA							
Face area (Sq. Ft.)		23.8	23.8	29.0	47.5	47.5	58.1
Rows		2	2	2	2	2	2
Fins per inch		20	20	20	20	20	20
Tube diameter (in./MM)		0.38 / 10	0.38 / 10	0.38 / 10	0.38 / 10	0.38 / 10	0.38 / 10
Circuitry Type		Interlaced	Interlaced	Interlaced	Interlaced	Interlaced	Interlaced
Refrigerant Control		TXV	TXV	TXV	TXV	TXV	TXV
CONDENSER FAN DATA							
No. Fans / Diameter (in.)		2/24	2/24	2/24	4/24	4/24	4/24
Type		Axial	Axial	Axial	Axial	Axial	Axial
Drive type		Direct	Direct	Direct	Direct	Direct	Direct
No. speeds		1	1	1	1	1	1
Number of motors	System #1	2	2	2	4	2	2
	System #2	---	---	---	---	2	2
Motor HP (ea.)		1/3	1/3	3/4	1/3	1/3	3/4
Rotation[4]		CW	CW	CW	CW	CW	CW
RPM		850	850	1100	850	850	1100
Nominal CFM	System #1	7500	7500	9800	15000	7500	9800
	System #2	---	---	---	---	7500	9800

1 Holding Charge is the amount in the unit as shipped from the factory.
2 Includes matched evaporator unit with 25 ft of piping.
3 All compressors include crankcase heaters.
4 When viewing the shaft end of the motor.

NC090 - 240 and ND120 - 240 Indoor Unit Physical Data

Component		Models						
		NC090	NC120	ND120	NC180	ND180	NC240	ND240
Nominal Tonnage		**7 1/2**	**10**	**10**	**15**	**15**	**20**	**20**
DIMENSIONS (inches)								
Length		56.0	56.0	56.0	74.5	74.5	98.5	98.5
Width		30.0	30.0	30.0	33.0	33.0	30.0	30.0
Height		65.0	65.0	65.0	75.0	75.0	65.0	65.0
WEIGHTS (lb)								
Unit Shipping		526	573	575	796	796	938	938
Unit Operating With								
Standard Motor and Drive		498	539	541	764	764	873	873
High Static Motor and Drive		500	550	552	792	792	903	903
INDOOR BLOWER (Forward Curve)								
Diameter x Width		12 x 12	15 x 15	15 x 15	18 x 18	18 x 18	15 x 15	15 x 15
Quantity		1	1	1	1	1	2	2
INDOOR COIL								
Face area (Sq. Ft.)		10.6	10.6	10.6	18.3	18.3	20.0	20.0
Rows		3	4	4	4	4	4	4
Fins per inch		15	15	15	15	15	15	15
Tube diameter		3/8	3/8	3/8	3/8	3/8	3/8	3/8
Circuitry Type		Interlaced	Interlaced	Interlaced	Interlaced	Interlaced	Interlaced	Interlaced
Refrigerant Control		TXV	TXV	TXV	TXV	TXV	TXV	TXV
SYSTEM DATA								
No. Refrigeration Circuits		1	1	2	1	2	1	2
Suction Line OD (in.)		1 1/8	1 3/8	1 1/8	1 5/8	1 3/8	1 5/8	1 3/8
Liquid Line OD (in.)		5/8	7/8	5/8	7/8	5/8	7/8	7/8
FILTERS								
Size and Quantity Per Model (In.)	16 x 25 x 2	4	4	4	---	---	8	8
	20 x 24 x 2	---	---	---	6	6	---	---
FACE AREA (SQ. FT.)		11.1	11.1	11.1	20.0	20.0	22.2	22.2
Size and Quantity Per Model (In.)	16 x 25 x 4	4	4	4	---	---	8	8
	20 x 24 x 4	---	---	---	6	6	---	---
FACE AREA (SQ. FT.)		11.1	11.1	11.1	18.0	18.0	22.2	22.2

NL090 - 240 and NM120 - 240 Indoor Unit Physical Data

Component		Models						
		NL090	NL120	NM120	NL180	NM180	NL240	NM240
Nominal Tonnage		**7 1/2**	**10**	**10**	**15**	**15**	**20**	**20**
DIMENSIONS (inches)								
Length		56.0	56.0	56.0	74.5	74.5	98.5	98.5
Width		30.0	30.0	30.0	33.0	33.0	30.0	30.0
Height		65.0	65.0	65.0	75.0	75.0	65.0	65.0
WEIGHTS (lb)								
Unit Shipping Standard Motor & Drive		542	586	588	794	794	932	932
Unit Shipping High Static Motor & Drive		549	597	599	850	850	963	963
Unit Operating With Standard Motor& Drive		516	563	565	762	762	897	897
Unit Operating With High Static Motor & Drive		523	574	576	788	788	928	928
INDOOR BLOWER (Forward Curve)								
Diameter x Width		12 x 12	15 x 15	15 x 15	18 x 18	18 x 18	15 x 15	15 x 15
Quantity		1	1	1	1	1	2	2
INDOOR COIL								
Face area (Sq. Ft.)		10.6	10.6	10.6	18.3	18.3	20.0	20.0
Rows		3	4	4	4	4	4	4
Fins per inch		15	15	15	15	15	15	15
Tube diameter		3/8	3/8	3/8	3/8	3/8	3/8	3/8
Circuitry Type		Interlaced	Interlaced	Interlaced	Interlaced	Interlaced	Interlaced	Interlaced
Refrigerant Control		TXV	TXV	TXV	TXV	TXV	TXV	TXV
SYSTEM DATA								
No. Refrigeration Circuits		1	1	2	1	2	1	2
Suction Line OD (in.)		1 1/8	1 3/8	1 1/8	1 5/8	1 3/8	1 5/8	1 3/8
Liquid Line OD (in.)		5/8	7/8	5/8	7/8	5/8	7/8	7/8
FILTERS								
Size and Quantity Per Model (In.)	16 x 25 x 2	4	4	4	---	---	8	8
	20 x 24 x 2	---	---	---	6	6	---	---
FACE AREA (SQ. FT.)		11.1	11.1	11.1	20.0	20.0	22.2	22.2
Size and Quantity Per Model (In.)	16 x 25 x 4	4	4	4	---	---	8	8
	20 x 24 x 4	---	---	---	6	6	---	---
FACE AREA (SQ. FT.)		11.1	11.1	11.1	18.0	18.0	22.2	22.2

NC300 Indoor Unit Physical Data

Component		Models
		NC300[1 2]
Nominal Tonnage		**25**
DIMENSIONS (inches)		
Length		100.1
Width		38.1
Height		74.6
WEIGHTS (lb)		
Unit Shipping		1067
Unit Operating With		
5 hp Motor & Drive		1130
7.5 hp Motor & Drive		1157
5 hp Motor & Drive With Field Installed VFD Intellispeed		1158
7.5 hp Motor & Drive Field Installed VFD Intellispeed		1187
INDOOR BLOWER (Forward Curve)		
Diameter x Width		18 X 18
Quantity		2
INDOOR COIL		
Face area (Sq. Ft.)		25.8
Rows		4
Fins per inch		16
Tube diameter		3/8
Circuitry Type		Split
Refrigerant Control		TEV
SYSTEM DATA		
No. Refrigeration Circuits		1
Suction Line OD (in.)		2 1/8
Liquid Line OD (in.)		7/8
FILTERS		
Size and Quantity Per Model (In.)	20 x 25 x 2	10
FACE AREA (SQ. FT.)		34.7
ACCESSORY		
HOT WATER COIL DATA		
Face area (Sq. Ft.)		21.2
Rows		2
Fins per inch		12
Tube diameter (Copper) OD (In.)		1/2
Connections (Supply and Return) OD (In.)		1 3/8
Weight (lb)		150
SYSTEM COIL DATA		
Face area (Sq. Ft.)		18.2
Rows		1
Fins per inch		8
Tube diameter (Copper) (In.)		1
Connection, (NPTE) (In.)		
Inlet		2
Outlet		1-1/2
Weight (lb)		160

1 Motors, Drive and Overload Kits must be ordered separately for the NC300. The Motor Drive and Overload Kits are to be field installed.

2 IntelliSpeed discrete fan control option for NC300 is field installed only. Refer to price pages or equipment selection tools to select the proper motor, drive, and IntelliSpeed VFD kit.

Unit Limitations

Condenser Unit limitations

Size (Tons)	Model	Unit Voltage	Applied Voltage[1]		SCCR (kVA)	Outdoor DB Temp Cooling (°F)		Indoor DB Temp Cooling (°F)		Outdoor DB Temp Heating (°F)		Indoor DB Temp Heating (°F)	
			Min	Max		Max	Min†	Max	Min	Max	Min	Max	Min
090 (7.5)	PC	208/230-3-60	187	252	5	125	40	86	68	70	0	80	50
		460-3-60	432	504	5								
090 (7.5)	YC	208/230-3-60	187	252	5	125	40	86	68	-	-	-	-
		460-3-60	432	504	5								
		575-3-60	540	630	5								
090 (7.5)	PE	208/230-3-60	187	252	5	125	40	86	68	70	0	80	50
		460-3-60	432	504	5								
090 (7.5)	YE	208/230-3-60	187	252	5	125	40	86	68	-	-	-	-
		460-3-60	432	504	5								
		575-3-60	540	630	5								
120 (10)	PC	208/230-3-60	187	252	5	125	40	86	68	70	0	80	50
		460-3-60	432	504	5								
120 (10)	YC/YD	208/230-3-60	187	252	5	125	40	86	68	-	-	-	-
		460-3-60	432	504	5								
		575-3-60	540	630	5								
150 (12.5)	YC/YD	208/230-3-60	187	252	5	125	40	86	68	-	-	-	-
		460-3-60	432	504	5								
		575-3-60	540	630	5								
180 (15)	PC/PD	208/230-3-60	187	252	5	125	40	86	68	70	0	80	50
		460-3-60	432	504	5								
180 (15)	YC/YD	208/230-3-60	187	252	5	125	40	86	68	-	-	-	-
		460-3-60	432	504	5								
		575-3-60	540	630	5								
240 (20)	PD	208/230-3-60	187	252	5	125	40	86	68	70	0	80	50
		460-3-60	432	504	5								
240 (20)	YC/YD	208/230-3-60	187	252	5	125	40	86	68	-	-	-	-
		460-3-60	432	504	5								
		575-3-60	540	630	5								
300 (25)	YC	208/230-3-60	187	252	5	125	40	86	68	-	-	-	-
		460-3-60	432	504	5								
		575-3-60	540	630	5								

1. Rated in accordance with AHRI Standard 110, Range “A” Utilization Voltage.

†. Low Ambient accessories are available to permit stable system operation at ambient temperatures down to 0°F.

Air Handling Unit Limitations

Model	Power Supply Voltage	SCCR (kVA)	Voltage Variation		Supply Air Range CFM		Entering Air Temperature Degrees °F			
							Cooling DB/WB		Heating DB[1]	
			Min.	Max.	Min.	Max.	Min.	Max.	Min.	Max.
NC/NL090	208/230-3-60	5	187	253	2,250	3,750	65/57	90/77	40	80
	460-3-60	5	414	506	2,250	3,750	65/57	90/77	40	80
	575-3-60	5	540	630	2,250	3,750	65/57	90/77	40	80
NC/NL120	208/230-3-60	5	187	253	3,000	5,000	65/57	90/77	40	80
	460-3-60	5	414	506	3,000	5,000	65/57	90/77	40	80
	575-3-60	5	540	630	3,000	5,000	65/57	90/77	40	80
ND/NM120	208/230-3-60	5	187	253	3,000	5,000	65/57	90/77	40	80
	460-3-60	5	414	506	3,000	5,000	65/57	90/77	40	80
	575-3-60	5	540	630	3,000	5,000	65/57	90/77	40	80
NC/NL180	208/230-3-60	5	187	253	4,500	7,500	65/57	90/77	40	80
	460-3-60	5	414	506	4,500	7,500	65/57	90/77	40	80
	575-3-60	5	540	630	4,500	7,500	65/57	90/77	40	80
ND/NM180	208/230-3-60	5	187	253	4,500	7,500	65/57	90/77	40	80
	460-3-60	5	414	506	4,500	7,500	65/57	90/77	40	80
	575-3-60	5	540	630	4,500	7,500	65/57	90/77	40	80
NC/NL240	208/230-3-60	5	187	253	6,000	10,000	65/57	90/77	40	80
	460-3-60	5	414	506	6,000	10,000	65/57	90/77	40	80
	575-3-60	5	540	630	6,000	10,000	65/57	90/77	40	80
ND/NM240	208/230-3-60	5	187	253	6,000	10,000	65/57	90/77	40	80
	460-3-60	5	414	506	6,000	10,000	65/57	90/77	40	80
	575-3-60	5	540	630	6,000	10,000	65/57	90/77	40	80
NC/NL300	208/230-3-60	5	187	253	8,000	12,000	65/57	90/77	40	80
	460-3-60	5	414	506	8,000	12,000	65/57	90/77	40	80
	575-3-60	5	540	630	8,000	12,000	65/57	90/77	40	80

[1] **Heating Min/Max temperatures apply to steam and hot water coils. NOTE: Do not apply steam to hot water coils.**

Cooling and Heating Ratings

Cooling And Heating Rating

Outdoor Unit	Indoor Unit	System Cooling Capacity[1]				Heating Capacity[1]				Rated Airflow (CFM)
						High Outdoor		Low Outdoor		
		Net Capacity[2] (MBH)	EER	IEER (CV)	IEER w/ IntelliSpeed	Net Capacity[2] (MBh)	COP	Net Capacity[2] (MBh)	COP	
PC090	NL090	89	11	N/A	12.4	82	3.4	49	2.3	3000
PE090	NC090	85	11	14	N/A	78	3.4	45	2.3	2900
PE090	NL090	85	11	N/A	16	78	3.4	45	2.3	2900
PC120	NL120	120	11.1	N/A	14.2	104	3.3	63	2.3	3700
PC180	NC180	180	10.6	12	N/A	168	3.2	104	2.3	5800
PC180	NL180	180	10.6	N/A	13.3	168	3.2	104	2.3	5800
PD180	ND180	174	10.6	11.6	N/A	160	3.4	100	2.25	6000
PD180	NM180	174	10.6	N/A	14	160	3.4	100	2.25	6000
PD240	NM240	230	10.6	N/A	13.3	220	3.3	130	2.2	8000
YC090	NL090	90	11.5	N/A	13.7	N/A	N/A	N/A	N/A	3000
YE090	NC090	91	11.2	13.2	N/A	N/A	N/A	N/A	N/A	3000
YE090	NL090	91	11.2	N/A	16	N/A	N/A	N/A	N/A	3000
YC090	NC120	95	12.0	13.0	N/A	N/A	N/A	N/A	N/A	3000
YC090	NL120	95	12.0	N/A	13.5	N/A	N/A	N/A	N/A	3000
YC120	NL120	120	11.2	N/A	12.9	N/A	N/A	N/A	N/A	4000
YD120	NM120	120	11.2	N/A	12.9	N/A	N/A	N/A	N/A	4000
YC150	NC180	148	11	12.4	N/A	N/A	N/A	N/A	N/A	5000
YC150	NL180	148	11	N/A	14	N/A	N/A	N/A	N/A	5000
YD150	NM180	150	11	N/A	12.8	N/A	N/A	N/A	N/A	5000
YC180	NC180	180	11.2	12.4	N/A	N/A	N/A	N/A	N/A	6000
YD180	ND180	180	11	12.4	N/A	N/A	N/A	N/A	N/A	6000
YC180	NL180	180	11.2	N/A	14	N/A	N/A	N/A	N/A	6000
YD180	NM180	180	11	N/A	14	N/A	N/A	N/A	N/A	6000
YD240	ND240	240	11	11.9	N/A	N/A	N/A	N/A	N/A	8000
YC240	NL240	236	11	N/A	12.7	N/A	N/A	N/A	N/A	7600
YD240	NM240	240	11	N/A	13.4	N/A	N/A	N/A	N/A	8000
YC300	NC300	290	10.2	N/A	12.2[3]	N/A	N/A	N/A	N/A	10000

1 Certified in accordance with the Ducted Systems Large Equipment certification program, which is based on AHRI Standard 340/360. (Except YC300)

2 NET capacity includes heat added by the standard motor horsepower. See N*090-240 Air Handler Blower Motor and Drive Data for standard motor sizes.

3 Requires field installed VFD kit.

LEGEND
EER = Energy Efficiency Ratio
AHRI = Air Conditioning and Refrigeration Institute
IEER = Integrated Energy Efficiency Ratio

Capacity Performance

Condenser and Air Handling Cooling Capacities

YC090/NL090

Air on Evaporator Coil		Temperature of Air on Condenser Coil															
		Total Capacity[1] (MBh)	Total Input (kW)[2]	Sensible Capacity (MBh) Return Dry Bulb (°F)						Total Capacity[1] (MBh)	Total Input (kW)[2]	Sensible Capacity (MBh) Return Dry Bulb (°F)					
CFM	WB (°F)			90	85	80	75	70	65			90	85	80	75	70	65
		75°F								85°F							
2250	77	110.8	6.0	51.5	42.0	32.6	-	-	-	107.2	6.5	49.8	40.4	30.9	-	-	-
	72	103.3	5.7	66.5	57.0	47.6	38.1	-	-	99.9	6.3	64.9	55.4	46.0	36.5	-	-
	67	95.9	5.5	81.5	72.0	62.6	53.1	43.6	-	92.6	6.2	80.0	70.5	61.0	51.6	42.1	-
	62	88.0	5.4	88.0	86.3	76.8	67.3	57.8	48.3	84.8	6.1	84.8	83.9	74.5	65.0	55.5	46.1
	57	77.7	5.2	77.7	77.7	72.2	62.8	53.3	43.8	80.1	6.0	80.1	80.1	73.1	63.6	54.2	44.7
2625	77	114.0	6.0	56.3	45.6	34.8	-	-	-	110.2	6.5	54.6	44.0	33.3	-	-	-
	72	106.3	5.7	72.3	61.6	50.9	40.1	-	-	102.7	6.3	70.8	60.2	49.6	38.9	-	-
	67	98.7	5.4	88.4	77.6	66.9	56.2	45.5	-	95.2	6.2	87.1	76.4	65.8	55.2	44.5	-
	62	90.6	5.4	90.6	89.7	82.2	71.9	60.7	50.0	87.1	6.1	87.1	86.7	80.3	69.6	59.0	48.3
	57	79.9	5.2	79.9	79.9	77.2	67.3	55.8	45.0	82.3	6.0	82.3	82.3	78.8	68.2	57.5	46.9
3000	77	117.2	5.9	61.0	49.1	37.1	-	-	-	113.1	6.5	59.4	47.5	35.7	-	-	-
	72	109.3	5.7	78.1	66.2	54.2	42.2	-	-	105.4	6.4	76.8	65.0	53.1	41.3	-	-
	67	101.4	5.4	95.2	83.2	71.3	59.3	47.3	-	97.7	6.2	94.2	82.4	70.5	58.7	46.9	-
	62	93.1	5.4	93.1	93.1	87.5	76.5	63.6	51.6	89.5	6.1	89.5	89.5	86.1	74.2	62.4	50.6
	57	82.2	5.2	82.2	82.2	82.2	71.7	58.3	46.3	84.5	6.0	84.5	84.5	84.5	72.7	60.8	49.0
3375	72	109.2	5.8	83.0	70.2	57.3	44.4	-	-	105.4	6.4	81.6	68.8	56.0	43.2	-	-
	67	101.3	5.5	98.2	88.2	75.3	62.5	49.6	-	97.7	6.3	96.0	87.2	74.3	61.5	48.7	-
	62	93.0	5.5	93.0	93.0	90.2	77.8	64.5	51.6	89.5	6.2	89.5	89.5	87.8	75.0	62.1	49.3
	57	82.1	5.3	82.1	82.1	82.1	70.0	56.4	43.5	84.5	6.1	84.5	84.5	84.5	71.7	58.9	46.0
3750	72	109.1	5.9	87.9	74.2	60.4	46.6	-	-	105.5	6.5	86.5	72.6	58.8	45.0	-	-
	67	101.2	5.6	101.2	93.2	79.4	65.7	51.9	-	97.8	6.3	97.8	91.9	78.1	64.3	50.5	-
	62	92.9	5.6	92.9	92.9	92.9	79.1	65.3	51.6	89.5	6.2	89.5	89.5	89.5	75.7	61.9	48.1
	57	82.0	5.4	82.0	82.0	82.0	68.2	54.4	40.7	84.5	6.1	84.5	84.5	84.5	70.7	56.9	43.1
		95°F								105°F							
2250	77	103.7	6.9	48.1	38.7	29.2	-	-	-	99.2	8.0	47.5	38.1	28.6	-	-	-
	72	96.5	6.9	63.3	53.8	44.4	35.0	-	-	92.2	8.0	62.1	52.6	43.2	33.7	-	-
	67	89.4	6.9	78.4	69.0	59.5	50.1	40.7	-	85.2	8.0	76.6	67.2	57.7	48.3	38.8	-
	62	81.6	6.7	81.6	81.6	72.1	62.7	53.3	43.8	77.9	7.7	77.9	77.9	69.2	59.7	50.3	40.9
	57	82.5	6.7	82.5	82.5	74.0	64.5	55.1	45.7	78.8	7.8	78.8	78.8	70.0	60.5	51.1	41.6
2625	77	106.4	7.0	52.9	42.3	31.8	-	-	-	101.7	8.1	53.5	41.7	31.1	-	-	-
	72	99.0	7.0	69.4	58.8	48.2	37.7	-	-	94.5	8.1	68.1	57.5	46.9	36.3	-	-
	67	91.7	6.9	85.8	75.3	64.7	54.1	43.6	-	87.3	8.0	82.8	73.3	62.7	52.1	41.5	-
	62	83.7	6.8	83.7	83.7	78.4	67.3	57.2	46.7	79.9	7.8	79.9	79.9	75.2	64.4	54.0	43.4
	57	84.6	6.7	84.6	84.6	80.4	69.1	59.2	48.7	80.7	7.9	80.7	80.7	76.1	65.1	54.8	44.2
3000	77	109.0	7.1	57.7	46.0	34.3	-	-	-	104.1	8.1	59.4	45.4	33.6	-	-	-
	72	101.5	7.0	75.5	63.8	52.1	40.4	-	-	96.8	8.1	74.2	62.5	50.7	38.9	-	-
	67	94.0	7.0	93.3	81.5	69.8	58.1	46.4	-	89.4	8.1	89.0	79.5	67.8	56.0	44.3	-
	62	85.8	6.8	85.8	85.8	84.6	72.0	61.2	49.5	81.8	7.9	81.8	81.8	81.2	69.0	57.7	46.0
	57	86.8	6.8	86.8	86.8	86.8	73.6	63.4	51.7	82.7	7.9	82.7	82.7	82.1	69.6	58.6	46.9
3375	72	101.7	7.1	80.2	67.5	54.7	41.9	-	-	96.9	8.1	79.2	66.3	53.5	40.7	-	-
	67	94.2	7.0	93.8	86.1	73.3	60.5	47.7	-	89.5	8.1	89.4	83.7	71.5	58.7	45.8	-
	62	86.0	6.8	86.0	86.0	85.4	72.1	59.8	47.0	82.0	7.9	82.0	82.0	81.7	68.6	56.0	43.2
	57	86.9	6.8	86.9	86.9	86.9	73.4	61.4	48.6	82.8	7.9	82.8	82.8	82.6	69.3	56.9	44.1
3750	72	101.9	7.1	85.0	71.1	57.3	43.4	-	-	97.1	8.1	84.1	70.2	56.3	42.4	-	-
	67	94.3	7.0	94.3	90.7	76.8	62.9	49.1	-	89.7	8.1	89.7	87.9	75.3	61.4	47.4	-
	62	86.1	6.9	86.1	86.1	86.1	72.3	58.4	44.5	82.1	7.9	82.1	82.1	82.1	68.2	54.3	40.4
	57	87.1	6.9	87.1	87.1	87.1	73.2	59.4	45.5	83.0	7.9	83.0	83.0	83.0	69.1	55.2	41.2

YC090/NL090 (Continued)

Air on Evaporator Coil		Temperature of Air on Condenser Coil															
		Total Capacity[1] (MBh)	Total Input (kW)[2]	Sensible Capacity (MBh) Return Dry Bulb (°F)						Total Capacity[1] (MBh)	Total Input (kW)[2]	Sensible Capacity (MBh) Return Dry Bulb (°F)					
CFM	WB (°F)			90	85	80	75	70	65			90	85	80	75	70	65
		115°F								125°F							
2250	77	94.7	9.0	46.9	37.5	28.0	-	-	-	90.2	10.1	46.3	36.9	27.4	-	-	-
	72	87.8	9.1	60.9	51.4	42.0	32.5	-	-	83.4	10.2	59.7	50.2	40.8	31.3	-	-
	67	80.9	9.1	74.8	65.4	55.9	46.5	37.0	-	76.7	10.3	73.0	63.6	54.1	44.6	35.2	-
	62	74.3	8.8	74.3	74.3	66.2	56.8	47.3	37.9	70.6	9.9	70.6	70.6	63.3	53.8	44.3	34.9
	57	75.0	8.9	75.0	75.0	66.0	56.5	47.0	37.6	71.3	10.0	71.3	71.3	61.9	52.5	43.0	33.5
2625	77	97.0	9.1	54.0	41.1	30.5	-	-	-	92.3	10.1	54.6	40.5	29.8	-	-	-
	72	89.9	9.1	66.9	56.3	45.6	35.0	-	-	85.3	10.2	65.7	55.0	44.3	33.7	-	-
	67	82.8	9.2	79.8	71.4	60.8	50.2	39.5	-	78.4	10.3	76.8	69.5	58.9	48.2	37.5	-
	62	76.1	8.8	76.1	76.1	72.0	61.4	50.8	40.1	72.2	9.9	72.2	72.2	68.9	58.4	47.5	36.9
	57	76.8	9.0	76.8	76.8	71.7	61.1	50.5	39.8	72.9	10.1	72.9	72.9	67.4	57.1	46.1	35.4
3000	77	99.2	9.1	61.1	44.7	32.9	-	-	-	94.3	10.2	62.8	44.1	32.2	-	-	-
	72	92.0	9.2	72.9	61.1	49.3	37.5	-	-	87.2	10.3	71.7	59.8	47.9	36.1	-	-
	67	84.8	9.2	84.8	77.5	65.7	53.9	42.1	-	80.2	10.3	80.2	75.5	63.6	51.8	39.9	-
	62	77.8	8.9	77.8	77.8	77.8	66.0	54.2	42.4	73.8	9.9	73.8	73.8	73.8	63.0	50.7	38.8
	57	78.6	9.0	78.6	78.6	77.5	65.7	53.9	42.1	74.5	10.1	74.5	74.5	72.9	61.8	49.1	37.3
3375	72	92.2	9.2	78.1	65.2	52.3	39.4	-	-	87.4	10.2	77.0	64.1	51.2	38.2	-	-
	67	84.9	9.2	84.9	81.3	69.7	56.8	44.0	-	80.3	10.3	80.3	78.9	67.9	55.0	42.1	-
	62	78.0	8.9	78.0	78.0	78.0	65.1	52.2	39.3	74.0	9.9	74.0	74.0	74.0	61.5	48.4	35.4
	57	78.7	9.0	78.7	78.7	78.2	65.3	52.4	39.5	74.6	10.1	74.6	74.6	73.8	61.3	47.9	35.0
3750	72	92.3	9.1	83.3	69.3	55.4	41.4	-	-	87.5	10.2	82.4	68.4	54.4	40.4	-	-
	67	85.1	9.2	85.1	85.1	73.8	59.8	45.8	-	80.4	10.3	80.4	80.4	72.2	58.2	44.2	-
	62	78.1	8.9	78.1	78.1	78.1	64.1	50.2	36.2	74.1	9.9	74.1	74.1	74.1	60.1	46.1	32.1
	57	78.9	9.0	78.9	78.9	78.9	64.9	51.0	37.0	74.8	10.0	74.8	74.8	74.8	60.8	46.8	32.8

1 These capacities are gross ratings. For net capacity, deduct supply air blower motor, MBh. Example: Refer to the appropriate Blower Performance Table for the BHP of the supply air blower motor, MBh = 3.415 x kW and kW = BHP x 0.746 ÷ nameplate rated motor efficiency.

2 These ratings include the condenser fan motors and the compressor motors but not the supply air blower motor.

YE090/NC090/NL090

Air on Evaporator Coil		Temperature of Air on Condenser Coil															
		Total Capacity[1] (MBh)	Total Input (kW)[2]	Sensible Capacity (MBh) Return Dry Bulb (°F)						Total Capacity[1] (MBh)	Total Input (kW)[2]	Sensible Capacity (MBh) Return Dry Bulb (°F)					
CFM	WB (°F)			90	85	80	75	70	65			90	85	80	75	70	65
		75°F								85°F							
1875	77	110.5	5.5	55.4	46.7	38.1	-	-	-	105.4	6.2	55.4	46.6	37.9	-	-	-
	72	99.7	5.4	66.0	56.9	47.8	38.7	-	-	95.9	6.1	65.0	56.0	47.0	38.1	-	-
	67	88.9	5.3	76.6	67.0	57.5	48.0	39.2	-	86.3	5.9	74.6	65.4	56.2	47.0	38.1	-
	62	81.1	5.2	81.1	75.3	67.2	55.8	48.9	39.7	78.3	5.9	78.3	74.0	65.3	55.2	47.2	38.1
2250	77	111.1	5.6	61.5	50.1	38.8	-	-	-	106.0	6.2	61.0	49.3	37.7	-	-	-
	72	102.0	5.5	72.0	61.1	50.301	39.5	-	-	97.9	6.1	70.6	59.9	49.1	38.4	-	-
	67	92.8	5.4	82.4	72.1	61.8	50.7	40.1	-	89.7	6.0	80.3	70.4	60.6	49.6	38.8	-
	62	86.6	5.3	86.6	80.6	73.4	60.7	51.7	40.8	83.8	6.0	83.8	79.2	72.0	60.1	50.1	39.1
	57	80.4	5.2	80.4	80.4	80.4	74.1	63.2	52.3	77.9	6.0	77.9	77.9	77.9	72.4	61.3	50.2
2625	77	111.7	5.6	67.7	53.6	39.4	-	-	-	106.5	6.2	66.6	52.1	37.5	-	-	-
	72	104.2	5.5	78.0	65.4	52.8	40.2	-	-	99.8	6.1	76.3	63.7	51.2	38.7	-	-
	67	96.8	5.4	88.3	77.3	66.2	53.4	41.0	-	93.1	6.1	85.9	75.4	64.9	52.1	39.5	-
	62	92.1	5.4	92.1	86.0	79.6	65.7	54.5	41.9	89.3	6.0	89.3	84.4	78.6	65.1	52.9	40.0
	57	87.4	5.3	87.4	87.4	87.4	80.5	67.9	55.4	85.5	6.0	85.5	85.5	85.5	79.3	66.3	53.2
3000	77	112.2	5.6	73.9	57.0	40.1	-	-	-	107.0	6.3	72.3	54.8	37.3	-	-	-
	72	106.5	5.5	84.0	69.7	55.3	41.0	-	-	101.8	6.2	81.9	67.6	53.3	39.0	-	-
	67	100.8	5.5	94.2	82.4	70.5	56.1	41.9	-	96.5	6.1	91.5	80.4	69.3	54.7	40.2	-
	62	97.7	5.4	96.8	91.3	85.8	70.6	57.3	43.1	94.8	6.1	93.9	89.6	85.3	70.1	55.7	41.0
	57	94.5	5.4	94.5	94.5	94.5	86.8	72.7	58.5	93.0	6.1	93.0	93.0	93.0	86.3	71.3	56.3
3375	72	108.8	5.6	90.0	73.9	57.8	41.7	-	-	103.7	6.2	87.5	71.4	55.4	39.3	-	-
	67	104.8	5.5	100.0	87.5	74.9	58.8	42.8	-	99.9	6.2	97.1	85.4	73.6	57.2	40.9	-
	62	103.2	5.5	101.3	96.6	92.0	75.6	60.1	44.2	100.3	6.2	97.6	94.8	91.9	75.0	58.6	41.9
	57	101.6	5.5	100.1	100.1	100.1	93.2	77.4	61.5	100.6	6.2	96.9	96.9	96.9	93.2	76.3	59.3
3750	72	111.1	5.6	96.1	78.2	60.318	42.4	-	-	105.7	6.3	93.2	75.3	57.5	39.6	-	-
	67	108.7	5.6	105.9	92.6	79.3	61.5	43.7	-	103.3	6.2	102.8	90.4	78.0	59.8	41.6	-
	62	108.7	5.6	105.8	102.0	98.2	80.6	62.9	45.3	105.7	6.2	101.4	100.0	98.6	80.0	61.4	42.8
	57	108.7	5.6	105.6	105.6	105.6	99.6	82.1	64.6	108.1	6.3	100.0	100.0	100.0	100.0	81.3	62.3
		95°F								105°F							
1875	77	100.4	6.8	55.4	46.5	37.6	-	-	-	95.3	7.9	52.5	43.8	35.1	-	-	-
	72	92.1	6.7	64.0	55.1	46.3	37.4	-	-	87.0	7.8	61.9	53.0	44.1	35.2	-	-
	67	83.8	6.6	72.7	63.8	54.9	46.0	37.0	-	78.6	7.7	71.3	62.2	53.1	44.1	35.0	-
	62	75.6	6.6	75.6	72.7	63.5	54.5	45.6	36.6	74.2	7.7	74.2	70.3	62.1	52.9	43.7	34.5
2250	77	100.8	6.8	60.5	48.5	36.6	-	-	-	95.8	7.9	58.5	46.5	34.5	-	-	-
	72	93.7	6.7	69.3	58.6	47.931	37.3	-	-	88.9	7.8	67.3	56.6	45.9	35.3	-	-
	67	86.6	6.6	78.1	68.7	59.3	48.4	37.5	-	81.9	7.7	76.0	66.7	57.4	46.5	35.5	-
	62	81.0	6.7	81.0	77.8	70.6	59.5	48.4	37.3	79.0	7.7	79.0	75.1	68.9	57.7	46.5	35.3
	57	75.4	6.7	75.4	75.4	75.4	70.6	59.4	48.1	76.2	7.7	76.2	76.2	76.2	68.9	57.4	46.0
2625	77	101.3	6.9	65.6	50.6	35.5	-	-	-	96.3	7.9	64.5	49.2	33.9	-	-	-
	72	95.4	6.8	74.5	62.1	49.6	37.1	-	-	90.8	7.8	72.6	60.2	47.8	35.4	-	-
	67	89.5	6.7	83.4	73.5	63.6	50.8	38.0	-	85.2	7.8	80.7	71.2	61.7	48.9	36.1	-
	62	86.5	6.7	86.5	82.8	77.7	64.5	51.3	38.1	83.9	7.8	83.9	79.9	75.6	62.4	49.3	36.1
	57	83.5	6.8	83.5	83.5	83.5	78.2	64.6	51.1	82.5	7.8	82.5	82.5	82.5	75.9	62.4	48.9
3000	77	101.7	6.9	70.7	52.6	34.5	-	-	-	96.9	7.9	70.5	51.9	33.3	-	-	-
	72	97.0	6.8	79.8	65.5	51.3	37.0	-	-	92.7	7.9	78.0	63.8	49.6	35.4	-	-
	67	92.3	6.8	88.8	78.4	68.0	53.2	38.5	-	88.5	7.8	85.4	75.7	66.0	51.3	36.6	-
	62	91.9	6.8	91.0	87.9	84.8	69.5	54.2	38.9	88.7	7.8	87.2	84.8	82.3	67.2	52.0	36.9
	57	91.5	6.8	91.5	91.5	91.5	85.7	69.9	54.1	88.9	7.8	88.9	88.9	88.9	83.0	67.4	51.8
3375	72	98.6	6.9	85.0	69.0	52.9	36.9	-	-	94.6	7.9	83.3	67.4	51.5	35.5	-	-
	67	95.1	6.8	94.2	83.3	72.4	55.7	38.9	-	91.7	7.9	90.1	80.2	70.2	53.7	37.2	-
	62	97.3	6.9	94.0	92.9	91.9	74.5	57.0	39.6	93.5	7.9	90.1	89.6	89.0	71.9	54.8	37.7
	57	99.6	6.9	93.8	93.8	93.8	93.2	75.1	57.1	95.3	7.9	90.1	90.1	90.1	90.1	72.4	54.7
3750	72	100.3	6.9	90.3	72.4	54.583	36.7	-	-	96.5	7.9	88.7	71.0	53.3	35.6	-	-
	67	97.9	6.9	97.9	88.2	76.8	58.1	39.4	-	95.0	7.9	94.8	84.7	74.5	56.1	37.8	-
	62	102.8	6.9	97.0	97.0	97.0	79.4	59.9	40.4	98.3	7.9	93.0	93.0	93.0	76.7	57.6	38.5
	57	107.6	7.0	94.4	94.4	94.4	94.4	80.4	60.0	101.7	8.0	91.2	91.2	91.2	91.2	77.4	57.7

YE090/NC090/NL090 (Continued)

Air on Evaporator Coil		Temperature of Air on Condenser Coil															
		Total Capacity[1] (MBh)	Total Input (kW)[2]	Sensible Capacity (MBh) Return Dry Bulb (°F)						Total Capacity[1] (MBh)	Total Input (kW)[2]	Sensible Capacity (MBh) Return Dry Bulb (°F)					
CFM	WB (°F)			90	85	80	75	70	65			90	85	80	75	70	65
		115°F								125°F							
1875	77	90.1	8.9	49.7	41.1	32.5	-	-	-	85.0	10.0	46.8	38.4	29.9	-	-	-
	72	81.8	8.9	59.8	50.9	41.9	33.0	-	-	76.6	9.9	57.7	48.7	39.8	30.8	-	-
	67	73.5	8.8	70.0	60.7	51.4	42.2	32.9	-	68.3	9.9	68.3	59.1	49.6	40.2	30.9	-
	62	72.8	8.7	72.8	67.9	60.8	51.3	41.8	32.4	71.4	9.8	71.4	65.5	59.4	49.7	40.0	30.2
2250	77	90.8	8.9	56.6	44.5	32.4	-	-	-	85.7	10.0	54.6	42.4	30.2	-	-	-
	72	84.0	8.9	65.3	54.6	43.9	33.3	-	-	79.1	9.9	63.3	52.6	42.0	31.3	-	-
	67	77.2	8.8	74.0	64.8	55.5	44.6	33.6	-	72.5	9.9	72.0	62.8	53.7	42.6	31.6	-
	62	77.1	8.8	77.1	72.5	67.1	55.8	44.5	33.2	75.1	9.8	74.3	69.8	65.4	54.0	42.6	31.2
	57	76.9	8.7	76.9	76.9	76.9	67.1	55.5	43.8	77.7	9.7	76.7	76.7	76.7	65.3	53.5	41.7
2625	77	91.4	8.9	63.4	47.8	32.2	-	-	-	86.4	9.9	62.3	46.4	30.5	-	-	-
	72	86.1	8.9	70.7	58.3	46.0	33.6	-	-	81.5	9.9	68.8	56.5	44.1	31.8	-	-
	67	80.9	8.9	78.0	68.9	59.7	47.0	34.2	-	76.6	9.9	75.3	66.5	57.7	45.0	32.3	-
	62	81.3	8.8	80.7	77.1	73.5	60.3	47.2	34.1	78.7	9.9	77.0	74.2	71.3	58.3	45.2	32.1
	57	81.6	8.8	81.6	81.6	81.6	73.7	60.2	46.7	80.7	9.8	78.7	78.7	78.7	71.5	58.0	44.5
3000	77	92.0	8.9	70.3	51.2	32.1	-	-	-	87.1	9.9	70.1	50.5	30.8	-	-	-
	72	88.3	8.9	76.2	62.1	48.0	33.9	-	-	84.0	9.9	74.4	60.4	46.3	32.3	-	-
	67	84.6	8.9	82.0	73.0	63.9	49.4	34.8	-	80.8	10.0	78.7	70.2	61.8	47.4	33.0	-
	62	85.5	8.9	83.5	81.6	79.8	64.8	49.9	34.9	82.3	9.9	79.7	78.5	77.3	62.5	47.7	33.0
	57	86.3	8.8	84.9	84.9	84.9	80.3	65.0	49.6	83.7	9.9	80.8	80.8	80.8	77.6	62.5	47.3
3375	72	90.5	8.9	81.6	65.8	50.0	34.2	-	-	86.4	9.9	79.9	64.2	48.5	32.8	-	-
	67	88.4	8.9	86.1	77.1	68.1	51.8	35.5	-	85.0	10.0	82.0	74.0	65.9	49.8	33.7	-
	62	89.7	8.9	86.3	86.2	86.1	69.4	52.6	35.8	85.9	9.9	82.4	82.4	82.4	66.8	50.3	33.9
	57	91.0	8.9	86.5	86.5	86.5	86.5	69.7	52.4	86.8	9.9	82.8	82.8	82.8	82.8	67.0	50.1
3750	72	92.7	8.9	87.1	69.5	52.0	34.5	-	-	88.9	10.0	85.5	68.1	50.7	33.3	-	-
	67	92.1	8.9	90.1	81.2	72.2	54.2	36.1	-	89.2	10.0	85.4	77.7	70.0	52.2	34.4	-
	62	93.9	9.0	89.1	89.1	89.1	73.9	55.3	36.7	89.5	10.0	85.1	85.1	85.1	71.1	52.9	34.8
	57	95.7	9.0	88.1	88.1	88.1	88.1	74.4	55.3	89.8	10.0	84.9	84.9	84.9	84.9	71.4	52.9

1 These capacities are gross ratings. For net capacity, deduct supply air blower motor, MBh. Example: Refer to the appropriate Blower Performance Table for the BHP of the supply air blower motor, MBh = 3.415 x kW and kW = BHP x 0.746 ÷ nameplate rated motor efficiency.

2 These ratings include the condenser fan motors and the compressor motors but not the supply air blower motor.

YC090/NC120/NL120

Air on Evaporator Coil		Temperature of Air on Condenser Coil															
		Total Capacity[1] (MBh)	Total Input (kW)[2]	Sensible Capacity (MBh) Return Dry Bulb (°F)						Total Capacity[1] (MBh)	Total Input (kW)[2]	Sensible Capacity (MBh) Return Dry Bulb (°F)					
CFM	WB (°F)			90	85	80	75	70	65			90	85	80	75	70	65
		75°F								85°F							
2250	77	105.1	6.0	49.2	40.2	31.1	-	-	-	108.2	6.6	50.3	41.2	32.1	-	-	-
	72	100.1	5.8	63.3	54.2	45.1	36.0	-	-	101.4	6.5	63.6	54.6	45.5	36.4	-	-
	67	95.1	5.7	77.3	68.2	59.1	50.0	40.9	-	94.6	6.3	77.0	67.9	58.8	49.7	40.7	-
	62	87.9	5.6	87.9	80.9	71.8	62.7	53.7	44.6	87.7	6.2	87.7	80.9	71.8	62.7	53.7	44.6
	57	83.1	5.5	83.1	83.1	76.8	67.7	58.6	49.5	84.1	6.2	84.1	84.1	77.2	68.2	59.1	50.0
2625	77	109.8	6.0	53.6	43.4	33.2	-	-	-	112.0	6.7	54.5	44.3	34.1	-	-	-
	72	104.5	5.9	68.6	58.3	48.1	37.9	-	-	105.0	6.5	68.6	58.4	48.3	38.1	-	-
	67	99.3	5.7	83.5	73.3	63.1	52.9	42.6	-	97.9	6.4	82.8	72.6	62.4	52.2	42.1	-
	62	91.8	5.6	91.8	86.9	76.7	66.8	56.2	46.0	90.7	6.2	90.7	86.4	76.2	66.0	55.8	45.7
	57	86.7	5.6	86.7	86.7	82.0	72.3	61.5	51.3	87.1	6.2	87.1	87.1	82.0	71.8	61.6	51.4
3000	77	114.5	6.1	58.0	46.6	35.3	-	-	-	115.8	6.7	58.7	47.4	36.1	-	-	-
	72	109.0	5.9	73.9	62.5	51.2	39.8	-	-	108.5	6.6	73.6	62.3	51.1	39.8	-	-
	67	103.5	5.8	89.8	78.4	67.1	55.7	44.4	-	101.2	6.4	88.6	77.3	66.0	54.7	43.4	-
	62	95.7	5.7	95.7	92.9	81.5	70.8	58.8	47.5	93.8	6.3	93.8	91.9	80.6	69.3	58.0	46.7
	57	90.4	5.6	90.4	90.4	87.1	76.9	64.4	53.1	90.0	6.3	90.0	90.0	86.7	75.4	64.1	52.8
3375	72	110.2	6.0	77.6	65.3	53.1	40.8	-	-	110.3	6.6	77.7	65.4	53.2	40.9	-	-
	67	104.6	5.8	94.1	81.8	69.5	57.3	45.0	-	102.9	6.5	93.3	81.0	68.8	56.5	44.3	-
	62	96.7	5.7	96.7	95.3	84.5	72.6	60.0	47.7	95.3	6.3	95.3	94.4	84.0	71.7	59.5	47.2
	57	91.4	5.6	91.4	91.4	89.8	78.0	65.2	53.0	91.5	6.3	91.5	91.5	89.8	77.6	65.3	53.1
3750	72	111.4	6.0	81.3	68.1	54.9	41.8	-	-	112.1	6.6	81.7	68.5	55.3	42.1	-	-
	67	105.8	5.9	98.4	85.2	72.0	58.8	45.6	-	104.5	6.5	97.9	84.7	71.5	58.3	45.1	-
	62	97.8	5.7	97.8	97.8	87.5	74.3	61.1	47.9	96.8	6.4	96.8	96.8	87.3	74.1	60.9	47.7
	57	92.4	5.7	92.4	92.4	92.4	79.2	66.0	52.8	93.0	6.3	93.0	93.0	93.0	79.8	66.6	53.4
		95°F								105°F							
2250	77	111.4	7.2	51.3	42.3	33.2	-	-	-	107.2	8.2	49.9	40.9	31.8	-	-	-
	72	102.8	7.1	64.0	54.9	45.9	36.8	-	-	99.1	8.0	62.6	53.5	44.5	35.4	-	-
	67	94.2	7.0	76.7	67.6	58.5	49.5	40.4	-	90.9	7.9	75.3	66.2	57.1	48.1	39.0	-
	62	87.4	6.8	87.4	80.9	71.8	62.7	53.6	44.6	84.0	7.8	84.0	79.3	70.2	61.1	52.0	43.0
	57	85.2	6.8	85.2	85.2	77.7	68.6	59.6	50.5	82.3	7.7	82.3	82.3	74.9	65.8	56.8	47.7
2625	77	114.2	7.3	55.3	45.2	35.0	-	-	-	110.2	8.3	53.9	43.8	33.6	-	-	-
	72	105.4	7.2	68.7	58.5	48.4	38.2	-	-	101.8	8.1	67.4	57.2	47.0	36.9	-	-
	67	96.6	7.0	82.1	71.9	61.8	51.6	41.5	-	93.4	8.0	80.8	70.6	60.5	50.3	40.1	-
	62	89.6	6.9	89.6	85.9	75.8	65.3	55.5	45.3	86.3	7.9	86.3	83.7	74.3	63.9	53.9	43.8
	57	87.4	6.8	87.4	87.4	82.0	71.3	61.7	51.6	84.6	7.8	84.6	84.6	79.3	68.8	58.9	48.8
3000	77	117.1	7.3	59.3	48.1	36.9	-	-	-	113.1	8.3	58.0	46.7	35.5	-	-	-
	72	108.0	7.2	73.4	62.2	50.9	39.7	-	-	104.5	8.2	72.1	60.9	49.6	38.4	-	-
	67	99.0	7.1	87.5	76.2	65.0	53.8	42.5	-	95.9	8.1	86.3	75.0	63.8	52.5	41.3	-
	62	91.9	6.9	91.9	91.0	79.7	67.9	57.3	46.0	88.6	7.9	88.6	88.2	78.3	66.8	55.8	44.6
	57	89.6	6.9	89.6	89.6	86.3	74.0	63.8	52.6	86.9	7.8	86.9	86.9	83.6	71.8	61.1	49.8
3375	72	110.4	7.2	77.7	65.5	53.3	41.1	-	-	106.7	8.2	76.4	64.2	52.0	39.7	-	-
	67	101.2	7.1	92.5	80.2	68.0	55.8	43.6	-	97.9	8.1	91.3	79.0	66.8	54.6	42.3	-
	62	93.9	7.0	93.9	93.4	83.4	70.9	59.0	46.8	90.5	8.0	90.5	90.3	82.0	69.7	57.6	45.3
	57	91.5	6.9	91.5	91.5	89.9	77.1	65.5	53.2	88.7	7.9	88.7	88.7	87.1	74.6	62.6	50.4
3750	72	112.8	7.3	82.1	68.9	55.7	42.4	-	-	108.9	8.3	80.8	67.6	54.3	41.1	-	-
	67	103.3	7.1	97.4	84.2	71.0	57.8	44.6	-	100.0	8.1	96.3	83.0	69.8	56.6	43.4	-
	62	95.9	7.0	95.9	95.9	87.1	73.9	60.7	47.5	92.4	8.0	92.4	92.4	85.8	72.5	59.3	46.1
	57	93.5	6.9	93.5	93.5	93.5	80.3	67.1	53.9	90.5	7.9	90.5	90.5	90.5	77.3	64.1	50.9

YC090/NC120/NL120 (Continued)

Air on Evaporator Coil		Temperature of Air on Condenser Coil															
		Total Capacity[1] (MBh)	Total Input (kW)[2]	Sensible Capacity (MBh) Return Dry Bulb (°F)						Total Capacity[1] (MBh)	Total Input (kW)[2]	Sensible Capacity (MBh) Return Dry Bulb (°F)					
CFM	WB (°F)			90	85	80	75	70	65			90	85	80	75	70	65
		115°F								125°F							
2250	77	103.1	9.1	48.5	39.5	30.4	-	-	-	98.9	10.1	47.1	38.0	29.0	-	-	-
	72	95.4	9.0	61.2	52.1	43.1	34.0	-	-	91.6	9.9	59.8	50.7	41.7	32.6	-	-
	67	87.6	8.9	73.9	64.8	55.8	46.7	37.6	-	84.4	9.8	72.5	63.4	54.4	45.3	36.2	-
	62	80.6	8.7	80.6	77.7	68.6	59.5	50.4	41.4	77.2	9.7	77.2	76.0	67.0	57.9	48.8	39.8
	57	79.5	8.6	79.5	79.5	72.1	63.0	54.0	44.9	76.6	9.5	76.6	76.6	69.3	60.2	51.2	42.1
2625	77	106.1	9.2	52.6	42.4	32.2	-	-	-	102.1	10.2	51.2	41.0	30.8	-	-	-
	72	98.2	9.1	66.0	55.9	45.7	35.5	-	-	94.6	10.1	64.7	54.5	44.3	34.2	-	-
	67	90.3	9.0	79.5	69.3	59.1	49.0	38.8	-	87.1	9.9	78.2	68.0	57.8	47.7	37.5	-
	62	83.0	8.8	83.0	81.5	72.8	62.6	52.4	42.3	79.7	9.8	79.7	79.3	71.2	61.2	50.9	40.7
	57	81.8	8.7	81.8	81.8	76.5	66.3	56.2	46.0	79.0	9.6	79.0	79.0	73.7	63.8	53.4	43.2
3000	77	109.2	9.3	56.6	45.3	34.1	-	-	-	105.3	10.3	55.2	44.0	32.7	-	-	-
	72	101.0	9.2	70.8	59.6	48.3	37.0	-	-	97.5	10.2	69.5	58.3	47.0	35.7	-	-
	67	92.9	9.1	85.1	73.8	62.5	51.3	40.0	-	89.8	10.1	83.9	72.6	61.3	50.0	38.7	-
	62	85.4	8.9	85.4	85.4	76.9	65.7	54.4	43.1	82.2	10.0	82.2	82.2	75.5	64.5	53.0	41.7
	57	84.2	8.8	84.2	84.2	80.9	69.6	58.4	47.1	81.5	9.8	81.5	81.5	78.2	67.4	55.6	44.3
3375	72	103.1	9.2	75.2	62.9	50.7	38.4	-	-	99.4	10.2	73.9	61.6	49.3	37.1	-	-
	67	94.7	9.1	90.1	77.8	65.6	53.3	41.1	-	91.5	10.1	88.9	76.6	64.4	52.1	39.8	-
	62	87.1	9.0	87.1	87.1	80.7	68.4	56.2	43.9	83.7	10.0	83.7	83.7	79.3	67.2	54.7	42.5
	57	85.9	8.8	85.9	85.9	84.2	72.0	59.7	47.5	83.0	9.8	83.0	83.0	81.4	69.4	56.8	44.6
3750	72	105.1	9.2	79.5	66.2	53.0	39.8	-	-	101.3	10.2	78.2	64.9	51.7	38.4	-	-
	67	96.6	9.1	95.1	81.9	68.6	55.4	42.1	-	93.2	10.1	93.2	80.7	67.4	54.2	40.9	-
	62	88.8	9.0	88.8	88.8	84.4	71.2	57.9	44.7	85.3	10.0	85.3	85.3	83.1	69.8	56.5	43.3
	57	87.6	8.8	87.6	87.6	87.6	74.3	61.1	47.8	84.6	9.8	84.6	84.6	84.6	71.3	58.1	44.8

1 These capacities are gross ratings. For net capacity, deduct supply air blower motor, MBh. Example: Refer to the appropriate Blower Performance Table for the BHP of the supply air blower motor, MBh = 3.415 x kW and kW = BHP x 0.746 ÷ nameplate rated motor efficiency.

2 These ratings include the condenser fan motors and the compressor motors but not the supply air blower motor.

YC120/NL120

Air on Evaporator Coil		Temperature of Air on Condenser Coil															
		Total Capacity[1] (MBh)	Total Input (kW)[2]	Sensible Capacity (MBh) Return Dry Bulb (°F)						Total Capacity[1] (MBh)	Total Input (kW)[2]	Sensible Capacity (MBh) Return Dry Bulb (°F)					
CFM	WB (°F)			90	85	80	75	70	65			90	85	80	75	70	65
		75°F								**85°F**							
3000	77	142.3	7.5	64.7	52.6	40.5	-	-	-	139.4	8.5	67.1	54.6	42.1	-	-	-
	72	133.9	7.4	84.4	72.2	60.1	48.0	-	-	129.5	8.4	85.3	72.8	60.3	47.8	-	-
	67	125.5	7.3	104.0	91.9	79.8	67.7	55.6	-	119.6	8.3	103.4	90.9	78.5	66.0	53.5	-
	62	115.0	7.3	115.0	109.5	94.2	82.0	69.9	57.8	111.3	8.2	111.3	108.6	96.1	83.6	71.1	58.6
	57	111.2	7.2	111.2	111.2	99.9	87.8	75.7	63.6	108.8	8.3	108.8	108.8	99.2	86.7	74.2	61.7
3500	77	151.4	7.5	72.3	58.7	45.2	-	-	-	147.0	8.5	74.2	60.2	46.1	-	-	-
	72	142.4	7.4	94.1	80.6	67.0	53.5	-	-	136.6	8.4	94.1	80.0	66.0	51.9	-	-
	67	133.4	7.3	116.0	102.5	88.9	75.4	61.8	-	126.1	8.3	114.0	99.9	85.9	71.8	57.8	-
	62	122.3	7.3	122.3	119.6	105.0	92.1	77.9	64.4	117.4	8.3	117.4	116.1	105.2	91.1	77.1	63.1
	57	118.3	7.2	118.3	118.3	111.3	98.6	84.2	70.7	114.8	8.3	114.8	114.8	108.6	94.6	80.5	66.5
4000	77	160.5	7.5	79.8	64.9	49.9	-	-	-	154.6	8.6	81.3	65.7	50.1	-	-	-
	72	150.9	7.4	103.9	88.9	73.9	59.0	-	-	143.7	8.5	102.9	87.3	71.7	56.1	-	-
	67	141.4	7.3	128.0	113.0	98.0	83.0	68.1	-	132.7	8.4	124.5	108.9	93.3	77.7	62.1	-
	62	129.6	7.3	129.6	129.6	115.9	102.2	86.0	71.0	123.5	8.3	123.5	123.5	114.3	98.7	83.1	67.5
	57	125.4	7.2	125.4	125.4	122.8	109.5	92.8	77.8	120.7	8.3	120.7	120.7	118.0	102.4	86.8	71.2
4500	72	154.4	7.5	110.8	94.3	77.8	61.4	-	-	148.2	8.5	110.7	93.7	76.6	59.6	-	-
	67	144.7	7.4	138.0	119.7	103.2	86.8	70.3	-	136.9	8.4	132.8	116.7	99.7	82.6	65.6	-
	62	132.6	7.3	132.6	132.6	124.4	108.6	91.5	75.0	127.4	8.3	127.4	127.4	122.1	105.1	88.0	70.9
	57	128.3	7.3	128.3	128.3	127.0	111.4	94.0	77.6	124.6	8.3	124.6	124.6	123.2	106.1	89.1	72.0
5000	72	157.9	7.5	117.6	99.7	81.7	63.8	-	-	152.7	8.5	118.6	100.0	81.5	63.0	-	-
	67	148.0	7.4	148.0	126.4	108.5	90.5	72.6	-	141.1	8.4	141.1	124.6	106.1	87.6	69.1	-
	62	135.6	7.3	135.6	135.6	132.9	114.9	97.0	79.1	131.3	8.3	131.3	131.3	129.9	111.4	92.9	74.4
	57	131.2	7.3	131.2	131.2	131.2	113.2	95.3	77.4	128.4	8.4	128.4	128.4	128.4	109.9	91.4	72.8
		95°F								**105°F**							
3000	77	136.4	9.5	69.6	56.7	43.8	-	-	-	127.0	10.7	66.5	53.5	40.6	-	-	-
	72	125.1	9.4	86.2	73.3	60.5	47.6	-	-	117.1	10.7	83.6	70.6	57.7	44.8	-	-
	67	113.7	9.3	102.9	90.0	77.1	64.2	51.3	-	107.2	10.6	100.7	87.8	74.8	61.9	48.9	-
	62	107.7	9.2	107.7	107.7	98.1	85.2	72.3	59.4	100.8	10.5	100.8	100.8	93.7	80.8	67.9	54.9
	57	106.5	9.3	106.5	106.5	98.6	85.7	72.8	59.9	100.2	10.6	100.2	100.2	91.6	78.7	65.8	52.8
3500	77	142.6	9.5	76.1	61.6	47.1	-	-	-	133.4	10.8	75.3	58.7	44.1	-	-	-
	72	130.7	9.4	94.0	79.5	64.9	50.4	-	-	123.1	10.7	92.0	77.3	62.7	48.1	-	-
	67	118.9	9.4	111.9	97.4	82.8	68.3	53.7	-	112.7	10.6	108.7	96.0	81.3	66.7	52.0	-
	62	112.6	9.2	112.6	112.6	105.3	90.2	76.3	61.7	106.0	10.5	106.0	106.0	101.9	86.9	72.6	57.9
	57	111.3	9.4	111.3	111.3	105.9	90.5	76.8	62.3	105.3	10.6	105.3	105.3	99.5	84.5	70.3	55.6
4000	77	148.8	9.6	82.7	66.5	50.3	-	-	-	139.9	10.8	84.1	63.9	47.6	-	-	-
	72	136.4	9.5	101.8	85.6	69.4	53.2	-	-	129.0	10.7	100.4	84.0	67.7	51.3	-	-
	67	124.0	9.4	120.9	104.7	88.5	72.3	56.1	-	118.2	10.6	116.6	104.1	87.8	71.5	55.1	-
	62	117.4	9.2	117.4	117.4	112.6	95.1	80.2	64.0	111.1	10.5	111.1	111.1	110.0	93.0	77.3	60.9
	57	116.1	9.4	116.1	116.1	113.2	95.3	80.8	64.6	110.5	10.6	110.5	110.5	107.4	90.2	74.7	58.4
4500	72	142.0	9.5	110.7	93.0	75.4	57.7	-	-	133.3	10.7	109.1	91.2	73.2	55.2	-	-
	67	129.1	9.4	127.5	113.8	96.1	78.5	60.8	-	122.1	10.6	121.3	112.3	95.0	77.0	59.0	-
	62	122.2	9.3	122.2	122.2	119.8	101.5	84.5	66.9	114.8	10.5	114.8	114.8	114.3	96.0	78.3	60.4
	57	120.8	9.4	120.8	120.8	119.4	100.9	84.1	66.4	114.1	10.6	114.1	114.1	112.6	94.2	76.7	58.7
5000	72	147.5	9.5	119.5	100.4	81.3	62.2	-	-	137.7	10.7	117.9	98.3	78.7	59.1	-	-
	67	134.1	9.4	134.1	122.8	103.7	84.6	65.5	-	126.1	10.7	126.1	120.4	102.1	82.5	62.9	-
	62	127.0	9.3	127.0	127.0	127.0	107.9	88.8	69.7	118.5	10.5	118.5	118.5	118.5	99.0	79.4	59.8
	57	125.6	9.4	125.6	125.6	125.6	106.5	87.4	68.3	117.8	10.6	117.8	117.8	117.8	98.2	78.7	59.1

YC120/NL120 (Continued)

Air on Evaporator Coil		Temperature of Air on Condenser Coil															
		Total Capacity[1] (MBh)	Total Input (kW)[2]	Sensible Capacity (MBh) Return Dry Bulb (°F)						Total Capacity[1] (MBh)	Total Input (kW)[2]	Sensible Capacity (MBh) Return Dry Bulb (°F)					
CFM	WB (°F)			90	85	80	75	70	65			90	85	80	75	70	65
		115°F								**125°F**							
3000	77	117.5	12.0	63.4	50.4	37.4	-	-	-	108.0	13.2	60.3	47.2	34.1	-	-	-
	72	109.1	11.9	81.0	68.0	55.0	41.9	-	-	101.2	13.2	78.4	65.3	52.2	39.1	-	-
	67	100.8	11.9	98.6	85.6	72.6	59.5	46.5	-	94.3	13.1	94.3	83.4	70.3	57.2	44.1	-
	62	94.0	11.8	94.0	94.0	89.4	76.4	63.4	50.4	87.2	13.0	87.2	87.2	85.1	72.0	59.0	45.9
	57	94.0	11.8	94.0	94.0	84.7	71.7	58.7	45.7	87.8	13.1	87.8	87.8	77.8	64.7	51.7	38.6
3500	77	124.2	12.0	74.4	55.8	41.1	-	-	-	115.1	13.2	73.6	53.0	38.1	-	-	-
	72	115.4	11.9	89.9	75.2	60.4	45.7	-	-	107.7	13.2	87.9	73.1	58.2	43.4	-	-
	67	106.6	11.9	105.5	94.6	79.8	65.1	50.3	-	100.4	13.1	100.4	93.2	78.3	63.5	48.6	-
	62	99.4	11.8	99.4	99.4	98.4	83.6	68.9	54.1	92.8	13.0	92.8	92.8	92.8	80.4	65.2	50.3
	57	99.4	11.8	99.4	99.4	93.2	78.5	63.7	49.0	93.5	13.1	93.5	93.5	86.9	72.4	57.2	42.3
4000	77	131.0	12.0	85.5	61.3	44.8	-	-	-	122.1	13.2	86.9	58.7	42.1	-	-	-
	72	121.7	11.9	98.9	82.4	65.9	49.5	-	-	114.3	13.2	97.5	80.8	64.2	47.6	-	-
	67	112.3	11.9	112.3	103.5	87.1	70.6	54.1	-	106.5	13.1	106.5	103.0	86.3	69.7	53.1	-
	62	104.8	11.8	104.8	104.8	107.3	90.8	74.4	57.9	98.5	13.1	98.5	98.5	98.5	88.7	71.4	54.8
	57	104.8	11.8	104.8	104.8	101.7	85.2	68.7	52.2	99.2	13.1	99.2	99.2	95.9	80.1	62.7	46.0
4500	72	124.7	11.9	107.6	89.3	71.0	52.8	-	-	116.1	13.2	106.1	87.5	68.9	50.3	-	-
	67	115.2	11.9	115.2	110.8	93.8	75.5	57.2	-	108.2	13.1	108.2	108.2	92.6	74.0	55.4	-
	62	107.4	11.8	107.4	107.4	108.7	90.4	72.1	53.8	100.0	13.1	100.0	100.0	100.0	84.9	65.9	47.3
	57	107.4	11.8	107.4	107.4	105.9	87.6	69.3	51.0	100.7	13.1	100.7	100.7	99.1	80.9	61.9	43.3
5000	72	127.8	12.0	116.3	96.2	76.1	56.1	-	-	117.9	13.2	114.7	94.1	73.6	53.0	-	-
	67	118.0	11.9	118.0	118.0	100.5	80.4	60.4	-	109.9	13.1	109.9	109.9	98.9	78.4	57.8	-
	62	110.1	11.8	110.1	110.1	110.1	90.0	69.9	49.8	101.6	13.0	101.6	101.6	101.6	81.0	60.4	39.9
	57	110.1	11.9	110.1	110.1	110.1	90.0	69.9	49.8	102.3	13.1	102.3	102.3	102.3	81.7	61.2	40.6

1 These capacities are gross ratings. For net capacity, deduct supply air blower motor, MBh. Example: Refer to the appropriate Blower Performance Table for the BHP of the supply air blower motor, MBh = 3.415 x kW and kW = BHP x 0.746 ÷ nameplate rated motor efficiency.

2 These ratings include the condenser fan motors and the compressor motors but not the supply air blower motor.

YD120/NM120

Air on Evaporator Coil		Temperature of Air on Condenser Coil															
		Total Capacity[1] (MBh)	Total Input (kW)[2]	Sensible Capacity (MBh) Return Dry Bulb (°F)						Total Capacity[1] (MBh)	Total Input (kW)[2]	Sensible Capacity (MBh) Return Dry Bulb (°F)					
CFM	WB (°F)			90	85	80	75	70	65			90	85	80	75	70	65
		75°F								**85°F**							
3000	77	138.1	7.5	63.6	51.7	39.9	-	-	-	132.8	8.6	62.9	50.8	38.7	-	-	-
	72	130.1	7.4	82.9	71.0	59.2	47.4	-	-	124.4	8.4	81.7	69.6	57.5	45.4	-	-
	67	122.0	7.2	102.2	90.4	78.5	66.7	54.8	-	115.9	8.3	100.6	88.5	76.4	64.3	52.2	-
	62	112.3	7.2	112.3	108.5	94.8	83.0	71.1	59.3	106.3	8.2	106.3	104.4	92.3	80.2	68.1	56.0
	57	108.2	7.1	108.2	108.6	99.9	88.0	76.2	64.3	105.7	8.2	105.7	105.7	95.1	83.0	70.9	58.8
3500	77	147.1	7.5	70.5	57.3	44.0	-	-	-	141.3	8.6	70.1	56.5	42.8	-	-	-
	72	138.4	7.4	91.8	78.6	65.3	52.0	-	-	132.4	8.4	91.0	77.3	63.6	50.0	-	-
	67	129.8	7.3	113.1	99.9	86.6	73.3	60.0	-	123.4	8.3	111.9	98.2	84.5	70.8	57.1	-
	62	119.5	7.2	119.5	117.6	104.6	91.9	78.0	64.7	113.2	8.2	113.2	112.2	102.1	88.5	74.8	61.1
	57	115.1	7.2	115.1	115.4	110.1	97.8	83.6	70.3	112.5	8.2	112.5	112.5	105.3	91.6	77.9	64.2
4000	77	156.0	7.6	77.5	62.8	48.1	-	-	-	149.9	8.6	77.4	62.1	46.9	-	-	-
	72	146.8	7.4	100.8	86.1	71.4	56.7	-	-	140.4	8.4	100.3	85.0	69.8	54.5	-	-
	67	137.7	7.3	124.1	109.4	94.6	79.9	65.2	-	130.9	8.3	123.2	107.9	92.6	77.4	62.1	-
	62	126.8	7.2	126.8	126.8	114.3	100.8	84.9	70.2	120.0	8.2	120.0	120.0	112.0	96.7	81.4	66.2
	57	122.1	7.2	122.1	122.1	120.4	107.5	91.0	76.3	119.3	8.2	119.3	119.3	115.4	100.1	84.9	69.6
4500	72	152.4	7.5	108.1	92.0	76.0	60.0	-	-	145.8	8.5	107.7	91.1	74.5	57.9	-	-
	67	142.9	7.3	136.1	116.8	100.8	84.8	68.8	-	135.9	8.3	132.1	115.5	98.9	82.3	65.7	-
	62	131.5	7.2	131.5	131.5	123.1	107.7	91.1	75.1	124.6	8.2	124.6	124.6	119.5	102.9	86.3	69.7
	57	126.7	7.2	126.7	126.7	125.9	110.8	93.9	77.8	123.9	8.2	123.9	123.9	121.9	105.3	88.7	72.1
5000	72	157.9	7.5	115.3	98.0	80.7	63.4	-	-	151.2	8.5	115.2	97.2	79.2	61.2	-	-
	67	148.1	7.4	148.1	124.3	107.0	89.7	72.4	-	141.0	8.3	141.0	123.1	105.1	87.2	69.2	-
	62	136.3	7.3	136.3	136.3	132.0	114.6	97.3	80.0	129.3	8.3	129.3	129.3	127.1	109.1	91.1	73.1
	57	131.3	7.3	131.3	131.3	131.3	114.0	96.7	79.4	128.5	8.2	128.5	128.5	128.5	110.5	92.5	74.6
		95°F								**105°F**							
3000	77	127.4	9.6	62.2	49.8	37.4	-	-	-	122.1	10.8	60.4	48.0	35.6	-	-	-
	72	118.7	9.5	80.6	68.2	55.9	43.5	-	-	112.7	10.7	78.3	65.8	53.4	41.0	-	-
	67	109.9	9.3	99.0	86.6	74.3	61.9	49.5	-	103.2	10.6	96.1	83.7	71.2	58.8	46.4	-
	62	100.4	9.2	100.4	100.4	89.8	77.5	65.1	52.7	95.0	10.5	95.0	95.0	86.6	74.1	61.7	49.3
	57	103.2	9.2	103.2	102.8	90.4	78.0	65.7	53.3	98.1	10.5	98.1	97.9	85.4	73.0	60.5	48.1
3500	77	135.6	9.6	69.7	55.6	41.6	-	-	-	129.2	10.8	70.6	53.8	39.6	-	-	-
	72	126.3	9.5	90.2	76.1	62.0	47.9	-	-	119.2	10.7	87.9	73.7	59.5	45.3	-	-
	67	116.9	9.3	110.6	96.6	82.5	68.4	54.3	-	109.2	10.6	105.2	93.6	79.4	65.2	51.0	-
	62	106.8	9.2	106.8	106.8	99.7	85.0	71.5	57.4	100.5	10.5	100.5	100.5	96.5	82.0	68.1	53.9
	57	109.9	9.2	109.9	109.6	100.4	85.4	72.2	58.1	103.8	10.5	103.8	103.6	95.2	80.5	66.8	52.6
4000	77	143.8	9.6	77.3	61.5	45.7	-	-	-	136.2	10.8	80.8	59.7	43.7	-	-	-
	72	133.9	9.5	99.8	84.0	68.2	52.3	-	-	125.7	10.7	97.5	81.6	65.6	49.6	-	-
	67	124.0	9.3	122.3	106.5	90.6	74.8	59.0	-	115.1	10.6	114.3	103.5	87.5	71.6	55.6	-
	62	113.3	9.2	113.3	113.3	109.6	92.6	78.0	62.2	106.0	10.5	106.0	106.0	106.4	89.8	74.4	58.5
	57	116.5	9.2	116.5	116.5	110.3	92.7	78.7	62.9	109.4	10.5	109.4	109.4	104.9	88.1	73.0	57.1
4500	72	139.2	9.5	107.4	90.2	72.9	55.7	-	-	131.0	10.7	105.2	87.7	70.3	52.8	-	-
	67	128.9	9.3	128.0	114.2	97.0	79.7	62.5	-	120.1	10.6	119.6	111.2	93.7	76.3	58.8	-
	62	117.7	9.2	117.7	117.7	115.9	98.1	81.4	64.2	110.5	10.5	110.5	110.5	110.7	92.9	75.8	58.3
	57	121.1	9.2	121.1	121.1	118.0	99.9	83.5	66.3	114.1	10.5	114.1	114.1	111.8	93.9	76.9	59.4
5000	72	144.5	9.5	115.0	96.3	77.7	59.0	-	-	136.4	10.7	112.9	93.9	74.9	56.0	-	-
	67	133.8	9.3	133.8	121.9	103.3	84.6	66.0	-	125.0	10.6	125.0	118.9	99.9	81.0	62.0	-
	62	122.2	9.2	122.2	122.2	122.2	103.5	84.9	66.2	115.0	10.5	115.0	115.0	115.0	96.1	77.1	58.1
	57	125.7	9.2	125.7	125.7	125.7	107.0	88.4	69.7	118.7	10.5	118.7	118.7	118.7	99.8	80.8	61.8

YD120/NM120 (Continued)

Air on Evaporator Coil		Temperature of Air on Condenser Coil															
		Total Capacity[1] (MBh)	Total Input (kW)[2]	Sensible Capacity (MBh) Return Dry Bulb (°F)						Total Capacity[1] (MBh)	Total Input (kW)[2]	Sensible Capacity (MBh) Return Dry Bulb (°F)					
CFM	WB (°F)			90	85	80	75	70	65			90	85	80	75	70	65
		115°F								125°F							
3000	77	116.8	12.1	58.7	46.2	33.7	-	-	-	111.5	13.3	57.0	44.4	31.8	-	-	-
	72	106.7	11.9	75.9	63.4	50.9	38.4	-	-	100.7	13.2	73.6	61.1	48.5	35.9	-	-
	67	96.6	11.8	93.2	80.7	68.2	55.7	43.2	-	89.9	13.1	89.9	77.7	65.1	52.6	40.0	-
	62	89.7	11.7	89.7	89.7	83.3	70.8	58.3	45.8	84.4	12.9	84.4	84.4	80.0	67.5	54.9	42.3
	57	93.0	11.7	93.0	92.9	80.4	67.9	55.4	42.9	87.9	12.9	87.9	87.9	75.5	62.9	50.3	37.8
3500	77	122.7	12.1	71.5	52.0	37.7	-	-	-	116.2	13.3	72.4	50.2	35.8	-	-	-
	72	112.1	11.9	85.6	71.3	57.0	42.7	-	-	105.0	13.2	83.3	68.9	54.5	40.1	-	-
	67	101.4	11.8	99.7	90.6	76.3	62.0	47.7	-	93.7	13.1	93.7	87.6	73.2	58.8	44.4	-
	62	94.2	11.7	94.2	94.2	93.2	78.9	64.6	50.3	88.0	12.9	88.0	88.0	88.0	75.8	61.1	46.7
	57	97.7	11.7	97.7	97.6	90.0	75.7	61.4	47.1	91.5	13.0	91.5	91.5	84.8	70.9	56.0	41.6
4000	77	128.6	12.1	84.3	57.8	41.7	-	-	-	120.9	13.3	87.7	56.0	39.7	-	-	-
	72	117.4	11.9	95.3	79.2	63.1	46.9	-	-	109.2	13.2	93.0	76.8	60.5	44.2	-	-
	67	106.3	11.8	106.3	100.5	84.4	68.3	52.2	-	97.4	13.1	97.4	97.4	81.3	65.0	48.8	-
	62	98.8	11.7	98.8	98.8	103.1	87.0	70.9	54.8	91.5	12.9	91.5	91.5	91.5	84.2	67.3	51.1
	57	102.3	11.7	102.3	102.3	99.6	83.5	67.3	51.2	95.2	13.0	95.2	95.2	94.2	78.8	61.7	45.4
4500	72	122.9	12.0	103.0	85.3	67.6	49.9	-	-	114.7	13.2	100.8	82.9	65.0	47.0	-	-
	67	111.2	11.8	111.2	108.2	90.5	72.8	55.1	-	102.4	13.1	102.4	102.4	87.3	69.3	51.4	-
	62	103.3	11.7	103.3	103.3	105.5	87.8	70.1	52.4	96.1	12.9	96.1	96.1	96.1	82.6	64.4	46.5
	57	107.1	11.7	107.1	107.1	105.7	88.0	70.3	52.6	100.0	13.0	100.0	100.0	99.5	82.0	63.6	45.7
5000	72	128.3	12.0	110.8	91.5	72.2	52.9	-	-	120.2	13.3	108.7	89.0	69.4	49.8	-	-
	67	116.1	11.9	116.1	115.9	96.6	77.3	58.0	-	107.3	13.2	107.3	107.3	93.3	73.7	54.1	-
	62	107.9	11.7	107.9	107.9	107.9	88.6	69.3	50.0	100.7	13.0	100.7	100.7	100.7	81.1	61.5	41.9
	57	111.8	11.8	111.8	111.8	111.8	92.5	73.2	53.9	104.8	13.0	104.8	104.8	104.8	85.2	65.6	46.0

1 These capacities are gross ratings. For net capacity, deduct supply air blower motor, MBh. Example: Refer to the appropriate Blower Performance Table for the BHP of the supply air blower motor, MBh = 3.415 x kW and kW = BHP x 0.746 ÷ nameplate rated motor efficiency.

2 These ratings include the condenser fan motors and the compressor motors but not the supply air blower motor.

YC150/NC180/NL180

Air on Evaporator Coil		Temperature of Air on Condenser Coil															
		Total Capacity[1] (MBh)	Total Input (kW)[2]	Sensible Capacity (MBh) Return Dry Bulb (°F)						Total Capacity[1] (MBh)	Total Input (kW)[2]	Sensible Capacity (MBh) Return Dry Bulb (°F)					
CFM	WB (°F)			90	85	80	75	70	65			90	85	80	75	70	65
		75°F								**85°F**							
3750	77	178.5	10.2	87.6	71.1	54.7	-	-	-	172.2	11.3	84.0	67.6	51.2	-	-	-
	72	168.2	9.9	111.9	95.4	78.9	62.4	-	-	161.2	11.0	108.3	91.9	75.5	59.2	-	-
	67	157.9	9.6	136.1	119.6	103.1	86.7	70.2	-	150.1	10.7	132.5	116.2	99.8	83.4	67.1	-
	62	144.8	9.4	144.8	144.8	129.3	112.8	96.3	79.8	138.9	10.6	138.9	138.9	126.4	110.1	93.7	77.3
	57	149.7	9.5	149.7	149.7	137.7	121.2	104.7	88.3	143.9	10.7	143.9	143.9	130.6	114.3	97.9	81.5
4375	77	184.7	10.2	94.2	77.2	58.5	-	-	-	177.6	11.3	92.4	73.7	55.0	-	-	-
	72	174.0	9.9	121.8	103.1	84.4	65.7	-	-	166.2	11.0	118.4	99.8	81.1	62.4	-	-
	67	163.4	9.6	149.5	129.0	110.3	91.6	72.9	-	154.7	10.8	144.5	125.8	107.1	88.4	69.8	-
	62	149.9	9.4	149.9	149.9	138.2	119.8	100.8	82.1	143.2	10.6	143.2	143.2	135.7	117.0	98.4	79.7
	57	154.9	9.5	154.9	154.9	147.3	129.1	109.8	91.1	148.4	10.7	148.4	148.4	140.2	121.6	102.9	84.2
5000	77	190.9	10.3	100.7	83.2	62.3	-	-	-	182.9	11.3	100.8	79.8	58.8	-	-	-
	72	179.9	9.9	131.8	110.8	89.9	68.9	-	-	171.2	11.0	128.6	107.6	86.6	65.6	-	-
	67	168.8	9.6	162.9	138.4	117.5	96.5	75.5	-	159.4	10.8	156.5	135.5	114.5	93.5	72.5	-
	62	154.9	9.4	154.9	154.9	147.2	126.8	105.3	84.3	147.5	10.6	147.5	147.5	145.0	124.0	103.0	82.0
	57	160.1	9.6	160.1	160.1	156.9	137.0	114.9	94.0	152.9	10.7	152.9	152.9	149.8	128.8	107.8	86.8
5625	72	182.3	10.1	142.7	119.7	96.7	73.7	-	-	174.1	11.2	139.0	116.1	93.1	70.2	-	-
	67	171.1	9.8	168.1	149.4	126.4	103.4	80.4	-	162.1	10.9	160.6	146.0	123.1	100.1	77.2	-
	62	157.0	9.6	157.0	157.0	153.1	130.4	107.1	84.1	150.0	10.7	150.0	150.0	148.8	125.8	102.9	79.9
	57	162.2	9.7	162.2	162.2	160.6	138.1	114.6	91.6	155.5	10.8	155.5	155.5	153.9	131.0	108.1	85.1
6250	72	184.7	10.2	153.7	128.6	103.6	78.5	-	-	177.0	11.3	149.4	124.5	99.7	74.8	-	-
	67	173.4	9.9	173.4	160.4	135.4	110.4	85.3	-	164.8	11.0	164.8	156.6	131.7	106.8	81.9	-
	62	159.0	9.7	159.0	159.0	159.0	134.0	108.9	83.9	152.5	10.8	152.5	152.5	152.5	127.6	102.7	77.8
	57	164.4	9.8	164.4	164.4	164.4	139.3	114.3	89.2	158.1	10.9	158.1	158.1	158.1	133.2	108.3	83.4
		95°F								**105°F**							
3750	77	166.0	12.3	80.3	64.1	47.8	-	-	-	159.9	14.1	79.0	62.8	46.6	-	-	-
	72	154.1	12.1	104.7	88.4	72.2	55.9	-	-	148.2	13.8	102.8	86.6	70.4	54.2	-	-
	67	142.3	11.9	129.0	112.7	96.5	80.2	64.0	-	136.4	13.5	126.7	110.5	94.2	78.0	61.8	-
	62	132.9	11.7	132.9	132.9	123.6	107.4	91.1	74.9	130.6	13.4	130.6	130.6	122.0	105.8	89.6	73.4
	57	138.2	11.8	138.2	138.2	123.6	107.3	91.1	74.8	134.7	13.5	134.7	134.7	119.4	103.2	87.0	70.8
4375	77	170.5	12.3	90.6	70.2	51.6	-	-	-	163.0	14.0	91.5	68.6	50.0	-	-	-
	72	158.3	12.1	115.0	96.4	77.8	59.1	-	-	151.0	13.7	112.8	94.2	75.6	56.9	-	-
	67	146.1	11.9	139.5	122.6	104.0	85.3	66.7	-	139.1	13.5	134.2	119.8	101.2	82.5	63.9	-
	62	136.5	11.7	136.5	136.5	133.2	114.3	95.9	77.3	133.1	13.4	133.1	133.1	130.9	112.1	93.6	75.0
	57	142.0	11.8	142.0	142.0	133.2	114.0	95.9	77.3	137.3	13.5	137.3	137.3	128.1	109.2	90.9	72.2
5000	77	175.0	12.3	100.8	76.3	55.3	-	-	-	166.1	13.9	104.0	74.4	53.4	-	-	-
	72	162.5	12.1	125.4	104.4	83.4	62.3	-	-	153.9	13.7	122.9	101.8	80.7	59.6	-	-
	67	150.0	11.9	150.0	132.5	111.5	90.4	69.4	-	141.7	13.4	141.7	129.1	108.1	87.0	65.9	-
	62	140.1	11.7	140.1	140.1	142.8	121.2	100.7	79.7	135.6	13.3	135.6	135.6	139.8	118.5	97.7	76.6
	57	145.7	11.8	145.7	145.7	142.8	120.7	100.7	79.7	140.0	13.4	140.0	140.0	136.9	115.3	94.8	73.7
5625	72	165.9	12.2	135.3	112.4	89.5	66.7	-	-	157.7	13.8	133.0	110.0	87.1	64.2	-	-
	67	153.1	12.0	153.1	142.6	119.7	96.8	73.9	-	145.2	13.5	145.2	138.0	116.6	93.7	70.8	-
	62	143.1	11.8	143.1	143.1	144.4	121.2	98.6	75.7	138.9	13.4	138.9	138.9	141.0	118.0	95.2	72.3
	57	148.7	11.9	148.7	148.7	147.3	123.9	101.5	78.6	143.4	13.5	143.4	143.4	141.8	118.6	96.0	73.1
6250	72	169.3	12.3	145.2	120.5	95.7	71.0	-	-	161.4	14.0	143.0	118.3	93.5	68.7	-	-
	67	156.3	12.1	156.3	152.7	128.0	103.2	78.5	-	148.6	13.7	148.6	146.9	125.2	100.4	75.6	-
	62	146.0	11.9	146.0	146.0	146.0	121.3	96.5	71.8	142.2	13.6	142.2	142.2	142.2	117.5	92.7	67.9
	57	151.8	12.0	151.8	151.8	151.8	127.0	102.3	77.6	146.8	13.7	146.8	146.8	146.8	122.0	97.2	72.5

YC150/NC180/NL180 (Continued)

Air on Evaporator Coil		Temperature of Air on Condenser Coil															
		Total Capacity[1] (MBh)	Total Input (kW)[2]	Sensible Capacity (MBh) Return Dry Bulb (°F)						Total Capacity[1] (MBh)	Total Input (kW)[2]	Sensible Capacity (MBh) Return Dry Bulb (°F)					
CFM	WB (°F)			90	85	80	75	70	65			90	85	80	75	70	65
		115°F								125°F							
3750	77	153.8	15.8	77.6	61.4	45.3	-	-	-	147.7	17.5	76.3	60.1	44.0	-	-	-
	72	142.2	15.5	101.0	84.8	68.7	52.5	-	-	136.2	17.2	99.2	83.0	66.9	50.8	-	-
	67	130.5	15.1	124.4	108.2	92.0	75.9	59.7	-	124.7	16.8	122.1	105.9	89.8	73.7	57.6	-
	62	128.2	15.1	128.2	128.2	120.4	104.2	88.0	71.9	125.8	16.8	125.8	125.8	118.7	102.6	86.5	70.4
	57	131.2	15.2	131.2	131.2	115.2	99.0	82.8	66.7	127.8	17.0	127.8	127.8	111.0	94.9	78.7	62.6
4375	77	155.5	15.7	92.3	67.0	48.4	-	-	-	148.1	17.3	93.2	65.4	46.8	-	-	-
	72	143.8	15.3	110.6	92.0	73.4	54.7	-	-	136.5	17.0	108.4	89.8	71.2	52.5	-	-
	67	132.0	15.0	128.9	117.0	98.3	79.7	61.1	-	125.0	16.6	123.7	114.2	95.5	76.9	58.3	-
	62	129.7	15.0	129.7	129.7	128.6	110.0	91.3	72.7	126.2	16.7	126.2	126.2	126.2	107.8	89.1	70.4
	57	132.7	15.1	132.7	132.7	123.1	104.4	85.8	67.2	128.1	16.8	128.1	128.1	118.0	99.7	80.8	62.1
5000	77	157.3	15.5	107.1	72.6	51.5	-	-	-	148.4	17.1	110.2	70.7	49.6	-	-	-
	72	145.4	15.2	120.3	99.2	78.1	57.0	-	-	136.8	16.8	117.7	96.6	75.4	54.3	-	-
	67	133.5	14.9	133.5	125.8	104.7	83.6	62.5	-	125.2	16.4	125.2	122.4	101.3	80.1	59.0	-
	62	131.1	14.9	131.1	131.1	136.9	115.8	94.7	73.6	126.6	16.5	126.6	126.6	126.6	113.1	91.6	70.5
	57	134.2	15.0	134.2	134.2	131.0	109.9	88.8	67.7	128.5	16.6	128.5	128.5	125.1	104.5	82.8	61.7
5625	72	149.5	15.4	130.6	107.6	84.7	61.7	-	-	141.3	17.0	128.2	105.2	82.3	59.3	-	-
	67	137.3	15.1	137.3	133.4	113.5	90.6	67.6	-	129.3	16.6	129.3	128.8	110.4	87.5	64.5	-
	62	134.8	15.1	134.8	134.8	137.7	114.7	91.8	68.8	130.7	16.7	130.7	130.7	130.7	111.5	88.4	65.4
	57	138.0	15.2	138.0	138.0	136.4	113.4	90.5	67.5	132.6	16.8	132.6	132.6	130.9	108.2	84.9	62.0
6250	72	153.6	15.6	140.9	116.1	91.3	66.5	-	-	145.7	17.2	138.7	113.9	89.1	64.3	-	-
	67	141.0	15.3	141.0	141.0	122.4	97.6	72.8	-	133.4	16.8	133.4	133.4	119.6	94.8	69.9	-
	62	138.5	15.3	138.5	138.5	138.5	113.7	88.9	64.1	134.7	16.9	134.7	134.7	134.7	109.9	85.1	60.2
	57	141.8	15.4	141.8	141.8	141.8	117.0	92.2	67.4	136.7	17.1	136.7	136.7	136.7	111.9	87.1	62.3

1 These capacities are gross ratings. For net capacity, deduct supply air blower motor, MBh. Example: Refer to the appropriate Blower Performance Table for the BHP of the supply air blower motor, MBh = 3.415 x kW and kW = BHP x 0.746 ÷ nameplate rated motor efficiency.

2 These ratings include the condenser fan motors and the compressor motors but not the supply air blower motor.

YD150/NM180

Air on Evaporator Coil		Temperature of Air on Condenser Coil															
		Total Capacity[1] (MBh)	Total Input (kW)[2]	Sensible Capacity (MBh) Return Dry Bulb (°F)						Total Capacity[1] (MBh)	Total Input (kW)[2]	Sensible Capacity (MBh) Return Dry Bulb (°F)					
CFM	WB (°F)			90	85	80	75	70	65			90	85	80	75	70	65
		75°F								**85°F**							
3750	77	170.2	10.0	80.1	64.2	48.3	-	-	-	173.7	11.0	81.5	65.4	49.3	-	-	-
	72	164.1	9.7	106.1	90.2	74.3	58.4	-	-	161.9	10.8	105.7	89.6	73.5	57.5	-	-
	67	157.9	9.5	132.0	116.1	100.2	84.3	68.5	-	150.1	10.6	129.8	113.8	97.7	81.7	65.6	-
	62	142.4	9.3	142.4	140.8	122.7	106.8	90.9	75.1	139.3	10.4	139.3	138.5	122.4	106.4	90.3	74.2
	57	141.3	9.3	141.3	141.3	129.9	114.0	98.1	82.2	140.0	10.4	140.0	140.0	127.0	111.0	94.9	78.8
4375	77	182.4	10.0	89.5	72.3	53.8	-	-	-	182.2	11.1	91.1	72.7	54.3	-	-	-
	72	175.5	9.7	119.7	101.2	82.7	64.2	-	-	169.8	10.9	117.7	99.3	80.8	62.4	-	-
	67	168.7	9.5	149.8	130.0	111.5	93.0	74.5	-	157.4	10.7	144.3	125.9	107.4	89.0	70.5	-
	62	152.3	9.4	152.3	151.5	136.6	118.9	99.7	81.2	146.1	10.5	146.1	145.7	134.6	116.1	97.7	79.2
	57	151.2	9.3	151.2	151.2	144.6	126.8	107.6	89.1	146.8	10.5	146.8	146.8	139.7	121.2	102.8	84.3
5000	77	194.5	10.0	98.9	80.4	59.3	-	-	-	190.7	11.1	100.8	80.0	59.2	-	-	-
	72	187.0	9.8	133.3	112.2	91.1	70.0	-	-	177.7	10.9	129.8	109.0	88.2	67.3	-	-
	67	179.5	9.5	167.6	143.9	122.8	101.7	80.6	-	164.8	10.7	158.8	138.0	117.1	96.3	75.5	-
	62	162.2	9.4	162.2	162.2	150.6	131.0	108.4	87.3	152.9	10.5	152.9	152.9	146.8	125.9	105.1	84.3
	57	161.1	9.4	161.1	161.1	159.2	139.6	117.0	95.9	153.7	10.5	153.7	153.7	152.3	131.4	110.6	89.8
5625	72	187.6	9.8	141.9	119.6	97.2	74.8	-	-	180.7	11.0	140.5	117.9	95.3	72.8	-	-
	67	180.3	9.6	174.3	153.5	131.1	108.7	86.4	-	167.5	10.8	164.6	149.3	126.7	104.1	81.5	-
	62	162.8	9.5	162.8	162.8	156.9	135.3	112.2	89.8	155.4	10.6	155.4	155.4	152.4	129.8	107.2	84.7
	57	161.6	9.4	161.6	161.6	160.7	139.0	115.9	93.5	156.3	10.6	156.3	156.3	155.6	133.0	110.4	87.8
6250	72	188.2	9.9	150.6	126.9	103.3	79.6	-	-	183.7	11.0	151.2	126.8	102.5	78.2	-	-
	67	181.0	9.7	181.0	163.0	139.4	115.7	92.1	-	170.3	10.8	170.3	160.6	136.2	111.9	87.6	-
	62	163.3	9.5	163.3	163.3	163.3	139.7	116.0	92.3	158.0	10.6	158.0	158.0	158.0	133.7	109.4	85.1
	57	162.1	9.5	162.1	162.1	162.1	138.5	114.8	91.1	158.8	10.6	158.8	158.8	158.8	134.5	110.2	85.9
		95°F								**105°F**							
3750	77	177.3	12.0	82.9	66.6	50.4	-	-	-	162.9	13.7	78.3	62.1	45.9	-	-	-
	72	159.8	11.9	105.3	89.0	72.8	56.6	-	-	149.2	13.5	101.4	85.2	69.0	52.8	-	-
	67	142.3	11.8	127.7	111.4	95.2	79.0	62.7	-	135.4	13.3	124.6	108.4	92.2	76.0	59.7	-
	62	136.2	11.5	136.2	136.2	122.1	105.9	89.7	73.4	128.0	13.0	128.0	128.0	118.2	102.0	85.7	69.5
	57	138.7	11.5	138.7	138.7	124.1	107.9	91.7	75.5	131.1	13.1	131.1	131.1	116.6	100.4	84.2	68.0
4375	77	182.1	12.1	92.8	73.1	54.7	-	-	-	168.7	13.7	90.6	68.8	50.3	-	-	-
	72	164.1	12.0	115.8	97.4	79.0	60.6	-	-	154.5	13.5	112.8	94.2	75.6	57.1	-	-
	67	146.2	11.9	138.8	121.7	103.3	84.9	66.5	-	140.3	13.4	134.9	119.6	101.0	82.4	63.9	-
	62	139.8	11.6	139.8	139.8	132.5	113.4	95.7	77.3	132.6	13.1	132.6	132.6	129.5	110.6	92.4	73.8
	57	142.5	11.6	142.5	142.5	134.7	115.6	97.9	79.5	135.8	13.2	135.8	135.8	127.7	108.8	90.6	72.1
5000	77	186.8	12.2	102.7	79.6	59.0	-	-	-	174.5	13.8	103.0	75.6	54.7	-	-	-
	72	168.4	12.1	126.4	105.8	85.2	64.7	-	-	159.9	13.6	124.1	103.2	82.3	61.3	-	-
	67	150.0	12.0	150.0	132.0	111.5	90.9	70.3	-	145.2	13.4	145.2	130.8	109.9	88.9	68.0	-
	62	143.5	11.7	143.5	143.5	142.9	120.8	101.8	81.2	137.2	13.1	137.2	137.2	140.9	119.2	99.0	78.1
	57	146.2	11.7	146.2	146.2	145.3	123.3	104.2	83.6	140.5	13.2	140.5	140.5	138.9	117.2	97.1	76.2
5625	72	173.8	12.1	139.0	116.3	93.5	70.7	-	-	164.1	13.6	136.3	113.3	90.3	67.2	-	-
	67	154.8	12.0	154.8	145.1	122.3	99.5	76.7	-	149.0	13.5	149.0	141.4	120.5	97.5	74.5	-
	62	148.1	11.7	148.1	148.1	147.8	124.3	102.3	79.5	140.7	13.2	140.7	140.7	142.6	119.2	96.6	73.5
	57	150.9	11.7	150.9	150.9	150.4	126.9	104.9	82.1	144.2	13.2	144.2	144.2	143.4	120.0	97.3	74.3
6250	72	179.2	12.1	151.7	126.8	101.8	76.8	-	-	168.3	13.7	148.5	123.4	98.3	73.1	-	-
	67	159.6	12.0	159.6	158.1	133.1	108.1	83.2	-	152.8	13.5	152.8	152.0	131.2	106.1	81.0	-
	62	152.7	11.7	152.7	152.7	152.7	127.7	102.8	77.8	144.3	13.2	144.3	144.3	144.3	119.2	94.1	69.0
	57	155.6	11.7	155.6	155.6	155.6	130.6	105.6	80.6	147.8	13.3	147.8	147.8	147.8	122.7	97.6	72.5

YD150/NM180 (Continued)

Air on Evaporator Coil		Temperature of Air on Condenser Coil															
		Total Capacity[1] (MBh)	Total Input (kW)[2]	Sensible Capacity (MBh) Return Dry Bulb (°F)						Total Capacity[1] (MBh)	Total Input (kW)[2]	Sensible Capacity (MBh) Return Dry Bulb (°F)					
CFM	WB (°F)			90	85	80	75	70	65			90	85	80	75	70	65
		115°F								**125°F**							
3750	77	148.6	15.3	73.8	57.6	41.4	-	-	-	134.2	17.0	69.2	53.1	36.9	-	-	-
	72	138.6	15.1	97.6	81.4	65.3	49.1	-	-	128.0	16.7	93.8	77.6	61.5	45.3	-	-
	67	128.6	14.8	121.5	105.3	89.1	72.9	56.7	-	121.7	16.3	118.3	102.2	86.0	69.9	53.7	-
	62	119.7	14.5	119.7	119.7	114.2	98.0	81.8	65.7	111.5	16.0	111.5	111.5	110.2	94.1	77.9	61.8
	57	123.4	14.7	123.4	123.4	109.0	92.8	76.7	60.5	115.7	16.3	115.7	115.7	101.5	85.3	69.2	53.0
4375	77	155.4	15.4	88.5	64.6	45.9	-	-	-	142.1	17.0	86.4	60.4	41.5	-	-	-
	72	145.0	15.1	109.7	91.0	72.3	53.6	-	-	135.4	16.6	106.7	87.8	68.9	50.0	-	-
	67	134.5	14.8	130.9	117.4	98.7	80.0	61.2	-	128.7	16.3	127.0	115.2	96.4	77.5	58.6	-
	62	125.3	14.5	125.3	125.3	126.5	107.8	89.0	70.3	118.0	16.0	118.0	118.0	118.0	105.0	85.7	66.8
	57	129.1	14.7	129.1	129.1	120.7	102.0	83.3	64.6	122.4	16.3	122.4	122.4	113.8	95.2	76.0	57.1
5000	77	162.3	15.4	103.2	71.6	50.3	-	-	-	150.0	16.9	103.5	67.6	46.0	-	-	-
	72	151.3	15.1	121.8	100.6	79.3	58.0	-	-	142.8	16.6	119.6	98.0	76.3	54.7	-	-
	67	140.4	14.8	140.4	129.5	108.3	87.0	65.7	-	135.6	16.3	135.6	128.3	106.7	85.1	63.5	-
	62	130.8	14.5	130.8	130.8	138.8	117.5	96.2	75.0	124.4	16.0	124.4	124.4	124.4	115.8	93.5	71.9
	57	134.8	14.7	134.8	134.8	132.5	111.2	90.0	68.7	129.0	16.2	129.0	129.0	126.0	105.2	82.8	61.2
5625	72	154.3	15.2	133.5	110.3	87.0	63.8	-	-	144.6	16.7	130.8	107.3	83.8	60.3	-	-
	67	143.2	14.9	143.2	137.8	118.8	95.5	72.3	-	137.4	16.4	137.4	134.1	117.1	93.6	70.1	-
	62	133.4	14.6	133.4	133.4	137.4	114.1	90.8	67.6	126.0	16.1	126.0	126.0	126.0	109.0	85.1	61.6
	57	137.4	14.8	137.4	137.4	136.3	113.0	89.8	66.5	130.7	16.3	130.7	130.7	129.2	106.1	82.2	58.7
6250	72	157.3	15.3	145.3	120.0	94.7	69.5	-	-	146.4	16.8	142.0	116.6	91.2	65.8	-	-
	67	146.0	15.0	146.0	146.0	129.3	104.1	78.8	-	139.2	16.5	139.2	139.2	127.5	102.1	76.7	-
	62	136.0	14.7	136.0	136.0	136.0	110.7	85.4	60.2	127.6	16.2	127.6	127.6	127.6	102.2	76.8	51.4
	57	140.1	14.9	140.1	140.1	140.1	114.8	89.6	64.3	132.4	16.5	132.4	132.4	132.4	107.0	81.6	56.2

1 These capacities are gross ratings. For net capacity, deduct supply air blower motor, MBh. Example: Refer to the appropriate Blower Performance Table for the BHP of the supply air blower motor, MBh = 3.415 x kW and kW = BHP x 0.746 ÷ nameplate rated motor efficiency.

2 These ratings include the condenser fan motors and the compressor motors but not the supply air blower motor.

YC180/NC180/NL180

Air on Evaporator Coil		Temperature of Air on Condenser Coil															
		Total Capacity[1] (MBh)	Total Input (kW)[2]	Sensible Capacity (MBh) Return Dry Bulb (°F)						Total Capacity[1] (MBh)	Total Input (kW)[2]	Sensible Capacity (MBh) Return Dry Bulb (°F)					
CFM	WB (°F)			90	85	80	75	70	65			90	85	80	75	70	65
		75°F								**85°F**							
4500	77	223.5	11.8	104.0	85.0	66.0	-	-	-	214.6	13.1	101.2	82.2	63.3	-	-	-
	72	207.2	11.5	132.3	113.3	94.4	75.4	-	-	198.3	12.8	129.0	110.1	91.2	72.2	-	-
	67	191.0	11.1	160.6	141.7	122.7	103.7	84.7	-	181.9	12.4	156.8	137.9	119.0	100.1	81.1	-
	62	176.0	10.8	176.0	171.9	151.4	132.5	113.5	94.5	168.5	12.2	168.5	166.4	147.5	128.6	109.7	90.8
	57	175.0	10.8	175.0	175.0	158.1	139.1	120.1	101.1	168.1	12.1	168.1	168.1	150.6	131.7	112.8	93.8
5250	77	229.4	11.9	113.7	92.3	70.8	-	-	-	220.1	13.2	110.7	89.4	68.1	-	-	-
	72	212.8	11.6	144.1	122.7	101.2	79.7	-	-	203.3	12.8	140.7	119.4	98.1	76.8	-	-
	67	196.1	11.2	174.5	153.0	131.6	110.1	88.7	-	186.5	12.5	170.6	149.3	128.0	106.7	85.4	-
	62	180.7	11.0	180.7	178.6	162.4	141.9	119.5	98.1	172.7	12.2	172.7	171.7	158.7	137.4	116.1	94.8
	57	179.7	10.9	179.7	179.7	169.6	149.6	126.6	105.2	172.4	12.2	172.4	172.4	162.0	140.7	119.4	98.1
6000	77	235.4	12.0	123.5	99.5	75.6	-	-	-	225.5	13.3	120.3	96.6	72.9	-	-	-
	72	218.3	11.7	155.9	132.0	108.0	84.1	-	-	208.3	12.9	152.3	128.6	105.0	81.3	-	-
	67	201.2	11.3	188.3	164.4	140.5	116.5	92.6	-	191.1	12.6	184.4	160.7	137.0	113.4	89.7	-
	62	185.4	11.1	185.4	185.4	173.4	151.3	125.5	101.6	177.0	12.3	177.0	177.0	169.9	146.2	122.6	98.9
	57	184.4	11.0	184.4	184.4	181.0	160.1	133.2	109.2	176.6	12.3	176.6	176.6	173.5	149.8	126.1	102.4
6750	72	221.3	11.3	165.2	139.4	113.7	88.0	-	-	213.7	13.6	165.8	140.1	114.5	88.8	-	-
	67	204.0	11.0	197.5	174.0	147.8	122.0	96.3	-	196.0	13.3	192.7	175.1	149.4	123.8	98.1	-
	62	187.9	10.7	187.9	187.9	181.9	157.1	130.4	104.7	181.5	13.0	181.5	181.5	178.0	152.4	126.7	101.1
	57	186.8	10.6	186.8	186.8	185.2	161.0	133.7	108.0	181.2	13.0	181.2	181.2	179.6	153.9	128.3	102.6
7500	72	224.2	10.9	174.4	146.9	119.4	91.8	-	-	219.0	14.3	179.2	151.6	123.9	96.3	-	-
	67	206.7	10.6	206.7	183.6	155.1	127.6	100.0	-	201.0	14.0	201.0	189.4	161.8	134.1	106.5	-
	62	190.4	10.3	190.4	190.4	190.4	162.8	135.3	107.8	186.1	13.7	186.1	186.1	186.1	158.5	130.9	103.2
	57	189.3	10.3	189.3	189.3	189.3	161.8	134.3	106.7	185.7	13.7	185.7	185.7	185.7	158.1	130.5	102.9
		95°F								**105°F**							
4500	77	205.8	14.4	98.3	79.5	60.6	-	-	-	195.5	15.9	95.5	76.6	57.7	-	-	-
	72	189.3	14.0	125.7	106.8	87.9	69.1	-	-	179.9	15.7	122.5	103.6	84.7	65.9	-	-
	67	172.8	13.7	153.0	134.1	115.3	96.4	77.5	-	164.3	15.4	149.5	130.7	111.8	92.9	74.0	-
	62	161.0	13.5	161.0	161.0	143.6	124.7	105.9	87.0	153.2	15.2	153.2	153.2	139.8	120.9	102.0	83.1
	57	161.3	13.5	161.3	161.3	143.1	124.3	105.4	86.6	154.3	15.2	154.3	154.3	136.3	117.4	98.5	79.6
5250	77	210.7	14.4	107.7	86.6	65.4	-	-	-	199.9	16.0	107.5	83.6	62.4	-	-	-
	72	193.8	14.1	137.2	116.1	94.9	73.8	-	-	183.9	15.8	134.0	112.8	91.6	70.4	-	-
	67	176.9	13.8	166.7	145.6	124.4	103.3	82.2	-	168.0	15.5	160.4	142.0	120.8	99.6	78.3	-
	62	164.8	13.5	164.8	164.8	155.0	132.9	112.7	91.6	156.6	15.2	156.6	156.6	151.0	129.4	108.6	87.4
	57	165.1	13.6	165.1	165.1	154.5	131.9	112.2	91.1	157.7	15.2	157.7	157.7	147.2	125.3	104.8	83.6
6000	77	215.5	14.5	117.1	93.7	70.2	-	-	-	204.2	16.1	119.5	90.5	67.0	-	-	-
	72	198.3	14.2	148.7	125.3	101.9	78.5	-	-	187.9	15.8	145.4	121.9	98.4	74.9	-	-
	67	181.0	13.8	180.4	157.0	133.6	110.2	86.8	-	171.6	15.6	171.3	153.3	129.7	106.2	82.7	-
	62	168.6	13.6	168.6	168.6	166.4	141.1	119.6	96.2	160.0	15.3	160.0	160.0	162.3	137.8	115.3	91.7
	57	168.9	13.6	168.9	168.9	165.9	139.4	119.1	95.6	161.2	15.3	161.2	161.2	158.2	133.2	111.2	87.6
6750	72	206.1	15.9	166.4	140.8	115.2	89.7	-	-	192.5	16.7	159.1	133.4	107.7	82.0	-	-
	67	188.1	15.6	187.8	176.1	151.0	125.5	99.9	-	175.8	16.4	175.7	166.6	142.0	116.3	90.7	-
	62	175.2	15.3	175.2	175.2	174.1	147.6	123.0	97.4	164.0	16.2	164.0	164.0	165.1	139.0	113.7	88.1
	57	175.5	15.3	175.5	175.5	174.0	146.9	122.9	97.3	165.1	16.2	165.1	165.1	163.6	137.2	112.3	86.6
7500	72	213.9	17.7	184.0	156.3	128.5	100.8	-	-	197.2	17.6	172.7	144.9	117.0	89.2	-	-
	67	195.2	17.3	195.2	195.2	168.5	140.7	113.0	-	180.0	17.3	180.0	180.0	154.3	126.5	98.6	-
	62	181.9	17.0	181.9	181.9	181.9	154.1	126.4	98.6	167.9	17.0	167.9	167.9	167.9	140.1	112.2	84.4
	57	182.2	17.0	182.2	182.2	182.2	154.4	126.7	99.0	169.0	17.0	169.0	169.0	169.0	141.2	113.4	85.6

YC180/NC180/NL180 (Continued)

Air on Evaporator Coil		Temperature of Air on Condenser Coil															
		Total Capacity[1] (MBh)	Total Input (kW)[2]	Sensible Capacity (MBh) Return Dry Bulb (°F)						Total Capacity[1] (MBh)	Total Input (kW)[2]	Sensible Capacity (MBh) Return Dry Bulb (°F)					
CFM	WB (°F)			90	85	80	75	70	65			90	85	80	75	70	65
		115°F								**125°F**							
4500	77	185.3	17.5	92.7	73.7	54.8	-	-	-	175.0	19.1	89.8	70.9	51.9	-	-	-
	72	170.5	17.3	119.4	100.5	81.5	62.6	-	-	161.1	18.9	116.2	97.3	78.4	59.4	-	-
	67	155.8	17.1	146.1	127.2	108.3	89.3	70.4	-	147.2	18.8	142.6	123.7	104.8	85.8	66.9	-
	62	145.5	16.9	145.5	145.5	136.0	117.1	98.2	79.3	137.7	18.6	137.7	137.7	132.2	113.3	94.3	75.4
	57	147.3	16.8	147.3	147.3	129.4	110.5	91.6	72.7	140.3	18.5	140.3	140.3	122.6	103.6	84.7	65.8
5250	77	189.1	17.6	107.3	80.6	59.3	-	-	-	178.3	19.2	107.1	77.6	56.2	-	-	-
	72	174.1	17.4	130.7	109.5	88.2	66.9	-	-	164.2	19.1	127.5	106.2	84.8	63.5	-	-
	67	159.0	17.2	154.2	138.3	117.1	95.8	74.5	-	150.1	18.9	147.9	134.7	113.4	92.1	70.7	-
	62	148.5	17.0	148.5	148.5	147.1	125.8	104.5	83.3	140.3	18.7	140.3	140.3	140.3	122.2	100.4	79.1
	57	150.4	16.9	150.4	150.4	140.0	118.7	97.4	76.2	143.0	18.6	143.0	143.0	132.7	112.1	90.0	68.7
6000	77	192.9	17.7	121.9	87.4	63.8	-	-	-	181.6	19.3	124.4	84.3	60.5	-	-	-
	72	177.6	17.5	142.1	118.5	94.8	71.2	-	-	167.3	19.2	138.8	115.0	91.3	67.6	-	-
	67	162.2	17.3	162.2	149.5	125.9	102.3	78.6	-	152.9	19.0	152.9	145.8	122.1	98.3	74.6	-
	62	151.5	17.0	151.5	151.5	158.2	134.5	110.9	87.3	142.9	18.8	142.9	142.9	142.9	131.2	106.6	82.8
	57	153.4	17.0	153.4	153.4	150.5	126.9	103.3	79.6	145.7	18.7	145.7	145.7	142.8	120.6	95.4	71.6
6750	72	179.0	17.5	151.7	126.0	100.2	74.4	-	-	165.5	18.3	144.4	118.5	92.7	66.8	-	-
	67	163.5	17.3	163.5	157.2	133.0	107.2	81.5	-	151.3	18.2	151.3	147.7	124.0	98.1	72.3	-
	62	152.7	17.0	152.7	152.7	156.0	130.3	104.5	78.7	141.4	17.9	141.4	141.4	141.4	121.6	95.3	69.4
	57	154.7	17.0	154.7	154.7	153.2	127.4	101.7	75.9	144.2	17.9	144.2	144.2	142.8	117.7	91.0	65.2
7500	72	180.4	17.5	161.4	133.5	105.5	77.6	-	-	163.7	17.4	150.1	122.1	94.1	66.0	-	-
	67	164.8	17.3	164.8	164.8	140.1	112.2	84.3	-	149.7	17.3	149.7	149.7	125.9	97.9	69.9	-
	62	153.9	17.0	153.9	153.9	153.9	126.0	98.1	70.2	140.0	17.1	140.0	140.0	140.0	112.0	83.9	55.9
	57	155.9	17.0	155.9	155.9	155.9	128.0	100.1	72.1	142.7	17.0	142.7	142.7	142.7	114.7	86.7	58.7

1 These capacities are gross ratings. For net capacity, deduct supply air blower motor, MBh. Example: Refer to the appropriate Blower Performance Table for the BHP of the supply air blower motor, MBh = 3.415 x kW and kW = BHP x 0.746 ÷ nameplate rated motor efficiency.

2 These ratings include the condenser fan motors and the compressor motors but not the supply air blower motor.

YD180/ND180/NM180

Air on Evaporator Coil		Temperature of Air on Condenser Coil															
		Total Capacity[1] (MBh)	Total Input (kW)[2]	Sensible Capacity (MBh) Return Dry Bulb (°F)						Total Capacity[1] (MBh)	Total Input (kW)[2]	Sensible Capacity (MBh) Return Dry Bulb (°F)					
CFM	WB (°F)			90	85	80	75	70	65			90	85	80	75	70	65
		75°F								**85°F**							
3750	77	218.6	12.6	99.2	83.3	67.4	-	-	-	213.3	13.8	96.4	79.9	63.5	-	-	-
	72	205.5	12.1	124.0	108.1	92.2	76.2	-	-	199.4	13.4	122.0	105.5	89.1	72.6	-	-
	67	192.4	11.7	148.8	132.9	117.0	101.0	85.1	-	185.5	13.1	147.6	131.1	114.6	98.2	81.7	-
	62	184.8	11.4	184.8	160.1	142.1	126.2	110.2	94.3	175.3	12.8	175.3	159.7	138.4	121.9	105.5	89.0
4500	77	225.1	12.7	109.7	91.8	73.9	-	-	-	219.1	13.8	106.1	87.7	69.4	-	-	-
	72	211.6	12.2	136.9	119.0	101.1	83.3	-	-	204.8	13.5	134.0	115.7	97.4	79.1	-	-
	67	198.1	11.8	164.1	146.2	128.4	110.5	92.6	-	190.6	13.1	162.0	143.7	125.4	107.1	88.8	-
	62	190.3	11.5	190.3	173.8	155.9	138.1	120.2	102.3	180.1	12.9	180.1	169.7	151.4	133.1	114.7	96.4
	57	172.5	11.3	172.5	172.5	158.3	140.4	122.5	104.7	172.4	12.9	172.4	172.4	155.0	136.6	118.3	100.0
5250	77	231.7	12.8	120.1	100.3	80.5	-	-	-	224.9	13.9	115.7	95.5	75.4	-	-	-
	72	217.8	12.3	149.7	129.9	110.1	90.3	-	-	210.3	13.5	146.1	125.9	105.8	85.6	-	-
	67	203.9	11.9	179.4	159.6	139.8	120.0	100.2	-	195.6	13.2	176.5	156.3	136.1	116.0	95.8	-
	62	195.8	11.6	195.8	187.6	169.8	150.0	130.2	110.4	184.9	12.9	184.9	179.7	164.4	144.2	124.0	103.8
	57	177.6	11.4	177.6	177.6	172.3	152.5	132.7	112.9	177.0	12.9	177.0	177.0	168.2	148.1	127.9	107.7
6000	77	238.2	12.8	130.5	108.7	87.0	-	-	-	230.7	13.9	125.4	103.3	81.3	-	-	-
	72	223.9	12.4	162.5	140.8	119.1	97.3	-	-	215.7	13.6	158.2	136.1	114.1	92.1	-	-
	67	209.6	11.9	194.6	172.9	151.2	129.4	107.7	-	200.7	13.2	191.0	168.9	146.9	124.9	102.8	-
	62	201.3	11.6	201.3	201.3	183.6	161.9	140.1	118.4	189.7	13.0	189.7	189.7	177.3	155.3	133.3	111.2
	57	182.6	11.5	182.6	182.6	182.6	164.6	142.9	121.2	181.5	13.0	181.5	181.5	181.5	159.5	137.5	115.4
6750	72	228.7	12.5	173.9	149.9	125.9	101.9	-	-	219.9	13.7	170.4	146.0	121.5	97.0	-	-
	67	214.1	12.1	206.6	183.7	159.8	135.8	111.8	-	204.5	13.3	199.7	180.9	156.4	131.9	107.4	-
	62	205.6	11.8	205.6	205.6	196.7	172.7	148.7	124.8	193.3	13.1	193.3	193.3	187.2	162.7	138.2	113.7
	57	186.5	11.6	186.5	186.5	186.5	164.4	140.4	116.4	185.0	13.1	185.0	185.0	185.0	160.5	136.1	111.6
7500	72	233.4	12.7	185.2	158.9	132.7	106.4	-	-	224.0	13.8	182.7	155.8	128.9	101.9	-	-
	67	218.5	12.2	218.5	194.6	168.4	142.1	115.9	-	208.4	13.4	208.4	192.8	165.9	139.0	112.1	-
	62	209.8	11.9	209.8	209.8	209.8	183.6	157.3	131.1	197.0	13.2	197.0	197.0	197.0	170.1	143.1	116.2
	57	190.4	11.8	190.4	190.4	190.4	164.1	137.9	111.6	188.5	13.2	188.5	188.5	188.5	161.6	134.7	107.8
		95°F								**105°F**							
3750	77	208.0	15.0	93.5	76.5	59.6	-	-	-	199.1	16.8	88.3	74.5	57.6	-	-	-
	72	193.3	14.7	119.9	102.9	85.9	68.9	-	-	184.5	16.6	117.4	100.5	83.5	66.5	-	-
	67	178.6	14.5	146.3	129.3	112.3	95.3	78.3	-	169.8	16.4	146.6	126.4	109.4	92.4	75.5	-
	62	165.9	14.3	165.9	159.4	134.7	117.7	100.7	83.7	159.3	16.3	159.3	156.1	131.5	114.6	97.6	80.6
4500	77	213.1	15.0	102.4	83.7	64.9	-	-	-	203.6	16.8	101.0	81.8	62.7	-	-	-
	72	198.0	14.7	131.2	112.4	93.7	74.9	-	-	188.6	16.6	129.2	110.1	90.9	71.7	-	-
	67	183.0	14.5	160.0	141.2	122.4	103.7	84.9	-	173.7	16.4	157.5	138.3	119.1	100.0	80.8	-
	62	169.9	14.3	169.9	165.6	146.8	128.1	109.3	90.5	162.9	16.3	162.9	160.7	143.2	124.1	104.9	85.7
	57	172.2	14.4	172.2	170.4	151.6	132.9	114.1	95.3	165.1	16.3	165.1	164.2	145.2	126.0	106.8	87.7
5250	77	218.2	15.0	111.4	90.8	70.3	-	-	-	208.1	16.8	113.8	89.2	67.8	-	-	-
	72	202.8	14.8	142.5	121.9	101.4	80.9	-	-	192.8	16.6	141.0	119.7	98.3	77.0	-	-
	67	187.4	14.5	173.6	153.1	132.5	112.0	91.4	-	177.5	16.4	168.3	150.2	128.9	107.5	86.1	-
	62	174.0	14.3	174.0	171.8	158.9	138.4	117.9	97.3	166.5	16.3	166.5	165.4	154.9	133.6	112.2	90.9
	57	176.4	14.4	176.4	175.4	164.2	143.6	123.1	102.5	168.7	16.4	168.7	168.3	157.0	135.6	114.3	92.9
6000	77	223.2	15.0	120.3	98.0	75.6	-	-	-	212.6	16.8	126.5	96.5	72.9	-	-	-
	72	207.5	14.8	153.8	131.5	109.1	86.8	-	-	197.0	16.6	152.8	129.3	105.7	82.2	-	-
	67	191.7	14.5	187.3	165.0	142.6	120.3	98.0	-	181.3	16.4	179.1	162.1	138.6	115.0	91.5	-
	62	178.0	14.3	178.0	178.0	171.1	148.7	126.4	104.1	170.1	16.3	170.1	170.1	166.6	143.1	119.5	96.0
	57	180.5	14.4	180.5	180.5	176.7	154.3	132.0	109.7	172.4	16.4	172.4	172.4	168.8	145.3	121.8	98.2
6750	72	211.1	14.8	167.0	142.1	117.1	92.1	-	-	201.2	16.6	166.0	140.0	114.0	88.0	-	-
	67	195.0	14.6	192.8	178.0	153.0	128.1	103.1	-	185.2	16.4	184.1	173.8	149.4	123.4	97.4	-
	62	181.1	14.4	181.1	181.1	177.6	152.6	127.7	102.7	173.7	16.3	173.7	173.7	172.0	146.0	120.0	94.0
	57	183.6	14.5	183.6	183.6	181.7	156.7	131.7	106.8	176.1	16.4	176.1	176.1	174.3	148.3	122.4	96.4
7500	72	214.6	14.9	180.2	152.6	125.0	97.4	-	-	205.4	16.6	179.1	150.7	122.2	93.8	-	-
	67	198.3	14.6	198.3	191.0	163.4	135.8	108.2	-	189.1	16.4	189.1	185.5	160.2	131.7	103.3	-
	62	184.1	14.4	184.1	184.1	184.1	156.5	128.9	101.3	177.4	16.3	177.4	177.4	177.4	149.0	120.5	92.1
	57	186.7	14.5	186.7	186.7	186.7	159.1	131.5	103.9	179.8	16.3	179.8	179.8	179.8	151.4	122.9	94.5

YD180/ND180/NM180 (Continued)

Air on Evaporator Coil		Temperature of Air on Condenser Coil															
		Total Capacity[1] (MBh)	Total Input (kW)[2]	Sensible Capacity (MBh) Return Dry Bulb (°F)						Total Capacity[1] (MBh)	Total Input (kW)[2]	Sensible Capacity (MBh) Return Dry Bulb (°F)					
CFM	WB (°F)			90	85	80	75	70	65			90	85	80	75	70	65
		115°F								125°F							
3750	77	190.3	18.6	83.0	72.6	55.6	-	-	-	181.4	20.3	76.6	70.6	53.6	-	-	-
	72	175.7	18.5	115.0	98.0	81.1	64.1	-	-	166.8	20.3	112.5	95.6	78.6	61.7	-	-
	67	161.0	18.4	147.0	123.5	106.5	89.6	72.6	-	152.2	20.3	147.4	120.6	103.6	86.7	69.7	-
	62	152.8	18.3	152.8	152.8	128.4	111.4	94.5	77.5	146.2	20.3	146.2	146.2	125.2	108.3	91.3	74.4
4500	77	194.2	18.5	99.6	80.0	60.5	-	-	-	184.7	20.3	98.1	78.2	58.2	-	-	-
	72	179.2	18.5	127.3	107.7	88.2	68.6	-	-	169.9	20.3	125.3	105.4	85.4	65.4	-	-
	67	164.3	18.4	155.0	135.4	115.9	96.3	76.7	-	155.0	20.3	152.5	132.5	112.6	92.6	72.6	-
	62	155.9	18.3	155.9	155.9	139.6	120.1	100.5	80.9	148.9	20.3	148.9	148.9	136.0	116.1	96.1	76.2
	57	158.0	18.3	158.0	158.0	138.7	119.1	99.6	80.0	150.8	20.2	150.8	150.8	132.2	112.3	92.3	72.3
5250	77	198.1	18.5	116.2	87.5	65.3	-	-	-	188.0	20.3	119.7	85.8	62.8	-	-	-
	72	182.8	18.5	139.6	117.4	95.3	73.1	-	-	172.9	20.3	138.1	115.1	92.2	69.2	-	-
	67	167.6	18.4	162.9	147.3	125.2	103.0	80.9	-	157.8	20.3	157.6	144.5	121.5	98.5	75.6	-
	62	159.0	18.3	159.0	159.0	150.9	128.7	106.6	84.4	151.5	20.3	151.5	151.5	146.8	123.9	100.9	78.0
	57	161.1	18.3	161.1	161.1	149.9	127.7	105.5	83.4	153.5	20.2	153.5	153.5	142.7	119.7	96.8	73.8
6000	77	201.9	18.5	132.8	94.9	70.2	-	-	-	191.3	20.3	141.2	93.4	67.5	-	-	-
	72	186.4	18.4	151.9	127.1	102.3	77.6	-	-	175.9	20.3	150.9	124.9	99.0	73.0	-	-
	67	170.9	18.4	170.9	159.3	134.5	109.8	85.0	-	160.5	20.3	160.5	156.4	130.4	104.5	78.5	-
	62	162.1	18.3	162.1	162.1	162.1	137.4	112.6	87.9	154.2	20.2	154.2	154.2	154.2	131.7	105.7	79.8
	57	164.3	18.3	164.3	164.3	161.0	136.3	111.5	86.8	156.2	20.2	156.2	156.2	153.2	127.2	101.3	75.3
6750	72	191.3	18.4	164.9	137.9	110.9	83.8	-	-	181.5	20.2	163.8	135.8	107.8	79.7	-	-
	67	175.4	18.3	175.4	169.6	145.7	118.7	91.7	-	165.6	20.2	165.6	165.4	142.0	114.0	86.0	-
	62	166.4	18.2	166.4	166.4	166.4	139.4	112.4	85.3	159.0	20.1	159.0	159.0	159.0	132.7	104.7	76.7
	57	168.6	18.2	168.6	168.6	167.0	140.0	113.0	85.9	161.2	20.1	161.2	161.2	159.7	131.6	103.6	75.5
7500	72	196.3	18.3	178.0	148.7	119.4	90.1	-	-	187.1	20.0	176.8	146.7	116.6	86.4	-	-
	67	179.9	18.2	179.9	179.9	156.9	127.6	98.3	-	170.7	20.0	170.7	170.7	153.6	123.5	93.4	-
	62	170.7	18.2	170.7	170.7	170.7	141.4	112.1	82.8	163.9	20.0	163.9	163.9	163.9	133.8	103.7	73.5
	57	173.0	18.2	173.0	173.0	173.0	143.7	114.4	85.1	166.1	20.0	166.1	166.1	166.1	136.0	105.9	75.7

1 These capacities are gross ratings. For net capacity, deduct supply air blower motor, MBh. Example: Refer to the appropriate Blower Performance Table for the BHP of the supply air blower motor, MBh = 3.415 x kW and kW = BHP x 0.746 ÷ nameplate rated motor efficiency.

2. These ratings include the condenser fan motors and the compressor motors but not the supply air blower motor.

YC240/NC240NL240

Air on Evaporator Coil		Temperature of Air on Condenser Coil															
		Total Capacity[1] (MBh)	Total Input (kW)[2]	Sensible Capacity (MBh) Return Dry Bulb (°F)						Total Capacity[1] (MBh)	Total Input (kW)[2]	Sensible Capacity (MBh) Return Dry Bulb (°F)					
CFM	WB (°F)			90	85	80	75	70	65			90	85	80	75	70	65
		75°F								**85°F**							
6000	77	286.3	15.3	136.1	113.4	90.6	-	-	-	280.0	16.9	131.5	108.2	84.9	-	-	-
	72	267.4	14.8	169.4	146.7	123.9	101.2	-	-	260.2	16.5	166.3	143.0	119.7	96.4	-	-
	67	248.5	14.4	202.7	180.0	157.2	134.5	111.7	-	240.5	16.1	201.0	177.7	154.4	131.1	107.8	-
	62	228.9	14.1	228.9	216.8	194.0	171.3	148.5	125.8	223.4	15.7	223.4	213.8	190.5	167.2	143.9	120.6
	57	227.5	14.0	227.5	227.5	205.1	182.4	159.6	136.9	220.8	15.7	220.8	220.8	201.8	178.5	155.2	131.9
7000	77	296.6	15.4	148.2	122.8	97.4	-	-	-	287.9	17.0	143.1	117.2	91.3	-	-	-
	72	277.0	14.9	184.0	158.6	133.2	107.8	-	-	267.6	16.6	180.5	154.5	128.6	102.7	-	-
	67	257.5	14.5	219.8	194.4	169.0	143.6	118.3	-	247.4	16.1	217.8	191.9	165.9	140.0	114.1	-
	62	237.1	14.2	237.1	231.1	208.6	184.8	157.8	132.4	229.7	15.8	229.7	224.9	204.7	178.7	152.8	126.9
	57	235.7	14.1	235.7	235.7	220.5	197.5	169.7	144.3	227.0	15.8	227.0	227.0	216.9	190.9	165.0	139.0
8000	77	306.9	15.5	160.3	132.3	104.2	-	-	-	295.8	17.1	154.7	126.2	97.6	-	-	-
	72	286.6	15.0	198.6	170.6	142.5	114.5	-	-	275.0	16.7	194.7	166.1	137.5	108.9	-	-
	67	266.4	14.6	236.9	208.9	180.8	152.8	124.8	-	254.2	16.2	234.6	206.0	177.4	148.8	120.3	-
	62	245.4	14.3	245.4	245.4	223.1	198.3	167.1	139.0	236.1	15.9	236.1	236.1	218.8	190.3	161.7	133.1
	57	243.8	14.2	243.8	243.8	235.9	212.7	179.8	151.8	233.3	15.9	233.3	233.3	231.9	203.3	174.7	146.2
9000	72	296.2	15.1	209.5	179.3	149.0	118.8	-	-	282.3	16.7	205.3	174.3	143.2	112.2	-	-
	67	275.2	14.7	251.9	219.4	189.1	158.9	128.6	-	261.0	16.3	246.8	215.8	184.8	153.8	122.8	-
	62	253.5	14.4	253.5	253.5	233.4	204.7	172.9	142.6	242.4	15.9	242.4	242.4	228.0	197.0	165.9	134.9
	57	251.9	14.3	251.9	251.9	248.0	220.1	187.5	157.2	239.5	15.9	239.5	239.5	238.8	207.8	176.8	145.8
10000	72	305.7	15.2	220.5	188.0	155.6	123.1	-	-	289.7	16.8	215.9	182.4	149.0	115.5	-	-
	67	284.0	14.8	266.9	229.9	197.4	165.0	132.5	-	267.7	16.3	259.1	225.7	192.2	158.8	125.3	-
	62	261.7	14.5	261.7	261.7	243.6	211.1	178.7	146.2	248.7	16.0	248.7	248.7	237.1	203.7	170.2	136.8
	57	260.0	14.4	260.0	260.0	260.0	227.6	195.1	162.7	245.7	16.0	245.7	245.7	245.7	212.3	178.8	145.4
		95°F								**105°F**							
6000	77	273.6	18.5	126.9	103.1	79.2	-	-	-	259.0	21.0	123.8	99.6	75.3	-	-	-
	72	253.1	18.1	163.1	139.3	115.4	91.6	-	-	239.6	20.4	159.8	135.6	111.3	87.1	-	-
	67	232.5	17.7	199.3	175.5	151.6	127.8	103.9	-	220.3	19.9	195.8	171.6	147.4	123.1	98.9	-
	62	217.9	17.3	217.9	210.8	186.9	163.1	139.2	115.4	205.1	19.5	205.1	201.5	182.5	158.3	134.0	109.8
	57	214.0	17.4	214.0	214.0	198.6	174.7	150.9	127.0	204.2	19.6	204.2	204.2	186.7	162.4	138.2	114.0
7000	77	279.2	18.6	138.0	111.6	85.1	-	-	-	264.6	21.0	137.3	108.0	81.0	-	-	-
	72	258.2	18.2	176.9	150.4	123.9	97.5	-	-	244.8	20.5	173.8	146.8	119.7	92.7	-	-
	67	237.3	17.8	215.8	189.3	162.8	136.3	109.9	-	225.0	20.0	210.4	185.5	158.5	131.4	104.4	-
	62	222.3	17.4	222.3	218.8	200.7	172.6	147.8	121.3	209.5	19.5	209.5	207.7	196.3	168.4	142.2	115.1
	57	218.4	17.5	218.4	218.4	213.2	184.3	160.3	133.8	208.6	19.6	208.6	208.6	200.7	172.5	146.6	119.6
8000	77	284.7	18.7	149.2	120.1	90.9	-	-	-	270.2	21.1	150.8	116.5	86.7	-	-	-
	72	263.4	18.3	190.7	161.6	132.5	103.4	-	-	250.0	20.6	187.8	158.0	128.1	98.2	-	-
	67	242.0	17.9	232.2	203.1	174.0	144.9	115.8	-	229.8	20.0	224.9	199.4	169.6	139.7	109.8	-
	62	226.8	17.5	226.8	226.8	214.5	182.2	156.3	127.2	213.9	19.6	213.9	213.9	210.0	178.5	150.3	120.4
	57	222.7	17.5	222.7	222.7	227.9	193.9	169.6	140.5	213.0	19.7	213.0	213.0	214.8	182.5	155.0	125.2
9000	72	268.5	18.3	201.0	169.2	137.4	105.7	-	-	255.2	20.7	198.4	166.0	133.5	101.1	-	-
	67	246.7	17.9	241.8	212.3	180.5	148.7	117.0	-	234.6	20.1	232.1	209.2	176.8	144.3	111.9	-
	62	231.2	17.5	231.2	231.2	222.6	189.2	159.0	127.2	218.4	19.7	218.4	218.4	215.2	181.9	150.3	117.8
	57	227.1	17.5	227.1	227.1	229.6	195.4	166.1	134.3	217.5	19.8	217.5	217.5	218.3	184.7	153.4	121.0
10000	72	273.6	18.3	211.3	176.8	142.4	108.0	-	-	260.4	20.7	209.0	174.0	139.0	104.0	-	-
	67	251.4	17.9	251.4	221.5	187.0	152.6	118.2	-	239.3	20.2	239.3	219.0	184.0	148.9	113.9	-
	62	235.6	17.5	235.6	235.6	230.6	196.2	161.7	127.3	222.8	19.8	222.8	222.8	220.3	185.3	150.3	115.2
	57	231.4	17.5	231.4	231.4	231.4	196.9	162.5	128.1	221.9	19.9	221.9	221.9	221.9	186.9	151.8	116.8

YC240/NC240NL240 (Continued)

Air on Evaporator Coil		Temperature of Air on Condenser Coil															
		Total Capacity[1] (MBh)	Total Input (kW)[2]	Sensible Capacity (MBh) Return Dry Bulb (°F)						Total Capacity[1] (MBh)	Total Input (kW)[2]	Sensible Capacity (MBh) Return Dry Bulb (°F)					
CFM	WB (°F)			90	85	80	75	70	65			90	85	80	75	70	65
		115°F								125°F							
6000	77	244.4	23.4	120.7	96.0	71.4	-	-	-	229.9	25.9	117.5	92.5	67.5	-	-	-
	72	226.2	22.8	156.5	131.9	107.2	82.6	-	-	212.8	25.1	153.2	128.2	103.2	78.1	-	-
	67	208.0	22.1	192.4	167.7	143.1	118.5	93.8	-	195.7	24.3	188.9	163.9	138.9	113.8	88.8	-
	62	192.2	21.6	192.2	192.2	178.1	153.5	128.8	104.2	179.4	23.8	179.4	179.4	173.7	148.6	123.6	98.6
	57	194.4	21.8	194.4	194.4	174.8	150.2	125.5	100.9	184.6	23.9	184.6	184.6	162.9	137.9	112.9	87.8
7000	77	250.0	23.5	136.5	104.5	76.9	-	-	-	235.5	25.9	135.8	101.0	72.8	-	-	-
	72	231.4	22.8	170.8	143.1	115.5	87.9	-	-	218.0	25.1	167.7	139.5	111.3	83.1	-	-
	67	212.8	22.1	205.0	181.7	154.1	126.5	98.9	-	200.5	24.3	199.6	178.0	149.8	121.6	93.4	-
	62	196.7	21.7	196.7	196.7	191.8	164.2	136.5	108.9	183.8	23.8	183.8	183.8	183.8	159.9	130.9	102.7
	57	198.9	21.8	198.9	198.9	188.3	160.6	133.0	105.4	189.1	24.0	189.1	189.1	175.8	148.8	119.4	91.2
8000	77	255.7	23.5	152.4	113.0	82.4	-	-	-	241.1	25.9	154.0	109.5	78.1	-	-	-
	72	236.6	22.8	185.0	154.4	123.7	93.1	-	-	223.2	25.1	182.1	150.8	119.4	88.0	-	-
	67	217.6	22.2	217.6	195.7	165.1	134.5	103.9	-	205.3	24.3	205.3	192.1	160.7	129.3	97.9	-
	62	201.1	21.7	201.1	201.1	205.5	174.9	144.3	113.6	188.2	23.9	188.2	188.2	188.2	171.2	138.2	106.9
	57	203.3	21.8	203.3	203.3	201.7	171.1	140.5	109.8	193.6	24.0	193.6	193.6	188.6	159.7	125.9	94.5
9000	72	241.9	23.0	195.9	162.8	129.7	96.5	-	-	228.6	25.4	193.3	159.5	125.8	92.0	-	-
	67	222.4	22.3	222.4	206.1	173.0	139.9	106.8	-	210.3	24.6	210.3	203.0	169.3	135.5	101.7	-
	62	205.6	21.9	205.6	205.6	207.8	174.6	141.5	108.4	192.7	24.1	192.7	192.7	192.7	167.4	132.8	99.0
	57	207.9	22.0	207.9	207.9	207.0	173.9	140.8	107.7	198.3	24.2	198.3	198.3	195.8	163.2	128.2	94.4
10000	72	247.2	23.2	206.8	171.2	135.6	100.0	-	-	233.9	25.6	204.5	168.3	132.1	95.9	-	-
	67	227.3	22.5	227.3	216.5	180.9	145.3	109.7	-	215.2	24.8	215.2	214.0	177.8	141.6	105.4	-
	62	210.0	22.0	210.0	210.0	210.0	174.4	138.8	103.2	197.3	24.3	197.3	197.3	197.3	163.5	127.4	91.2
	57	212.4	22.2	212.4	212.4	212.4	176.8	141.2	105.6	202.9	24.5	202.9	202.9	202.9	166.7	130.5	94.3

1 These capacities are gross ratings. For net capacity, deduct supply air blower motor, MBh. Example: Refer to the appropriate Blower Performance Table for the BHP of the supply air blower motor, MBh = 3.415 x kW and kW = BHP x 0.746 ÷ nameplate rated motor efficiency.

2 These ratings include the condenser fan motors and the compressor motors but not the supply air blower motor.

YD240/ND240/NM240

Air on Evaporator Coil		Temperature of Air on Condenser Coil															
		Total Capacity[1] (MBh)	Total Input (kW)[2]	Sensible Capacity (MBh) Return Dry Bulb (°F)						Total Capacity[1] (MBh)	Total Input (kW)[2]	Sensible Capacity (MBh) Return Dry Bulb (°F)					
CFM	WB (°F)			90	85	80	75	70	65			90	85	80	75	70	65
		75°F								**85°F**							
6000	77	292.8	14.7	136.9	111.9	87.0	-	-	-	284.3	16.4	135.2	110.2	85.1	-	-	-
	72	272.9	14.4	174.4	149.4	124.5	99.5	-	-	263.5	16.1	171.7	146.7	121.7	96.6	-	-
	67	253.0	14.0	211.9	186.9	162.0	137.0	112.0	-	242.6	15.8	208.2	183.2	158.2	133.2	108.1	-
	62	231.8	13.8	231.8	220.2	195.2	170.2	145.2	120.2	225.5	15.5	225.5	219.3	194.3	169.2	144.2	119.2
	57	224.6	13.7	224.6	224.6	207.1	182.1	157.1	132.1	219.3	15.5	219.3	219.3	201.5	176.5	151.5	126.5
7000	77	302.2	14.8	149.9	121.7	93.5	-	-	-	292.0	16.5	147.3	119.2	91.1	-	-	-
	72	281.7	14.5	190.2	162.0	133.8	105.6	-	-	270.5	16.2	186.4	158.3	130.2	102.2	-	-
	67	261.1	14.2	230.5	202.3	174.1	145.9	117.7	-	249.1	15.9	225.5	197.4	169.3	141.3	113.2	-
	62	239.3	13.9	239.3	233.5	209.9	182.9	153.5	125.3	231.5	15.6	231.5	228.4	208.0	179.9	151.8	123.8
	57	231.8	13.9	231.8	231.8	222.6	196.1	166.2	138.0	225.2	15.6	225.2	225.2	215.7	187.7	159.6	131.5
8000	77	311.7	14.9	162.8	131.4	100.0	-	-	-	299.6	16.6	159.4	128.2	97.1	-	-	-
	72	290.5	14.6	206.0	174.5	143.1	111.7	-	-	277.6	16.3	201.0	169.9	138.8	107.7	-	-
	67	269.3	14.3	249.1	217.7	186.2	154.8	123.4	-	255.6	16.0	242.7	211.6	180.5	149.4	118.3	-
	62	246.8	14.0	246.8	246.8	224.5	195.6	161.7	130.3	237.6	15.7	237.6	237.6	221.7	190.5	159.4	128.3
	57	239.1	14.0	239.1	239.1	238.1	210.2	175.3	143.9	231.1	15.7	231.1	231.1	229.9	198.8	167.7	136.6
9000	72	299.4	14.9	217.9	184.4	150.9	117.3	-	-	284.7	16.6	212.0	178.6	145.2	111.7	-	-
	67	277.5	14.6	267.1	229.8	196.3	162.8	129.3	-	262.2	16.3	255.6	222.1	188.7	155.3	121.9	-
	62	254.3	14.3	254.3	254.3	236.8	204.5	169.7	136.2	243.7	16.0	243.7	243.7	231.8	198.4	165.0	131.5
	57	246.4	14.2	246.4	246.4	245.9	214.1	178.9	145.4	237.0	16.0	237.0	237.0	236.4	203.0	169.6	136.2
10000	72	308.2	15.2	229.9	194.2	158.6	123.0	-	-	291.8	16.9	222.9	187.2	151.5	115.8	-	-
	67	285.7	14.8	285.0	242.0	206.4	170.8	135.2	-	268.7	16.5	268.4	232.7	197.0	161.3	125.6	-
	62	261.9	14.6	261.9	261.9	249.0	213.4	177.7	142.1	249.7	16.3	249.7	249.7	241.9	206.2	170.5	134.8
	57	253.7	14.5	253.7	253.7	253.7	218.1	182.5	146.9	242.9	16.3	242.9	242.9	242.9	207.2	171.5	135.8
		95°F								**105°F**							
6000	77	275.8	18.1	133.4	108.4	83.3	-	-	-	262.8	20.3	129.8	104.7	79.5	-	-	-
	72	254.0	17.8	169.0	143.9	118.8	93.8	-	-	242.0	20.1	164.8	139.7	114.6	89.5	-	-
	67	232.2	17.5	204.5	179.5	154.4	129.3	104.3	-	221.1	19.8	199.8	174.7	149.6	124.5	99.4	-
	62	219.1	17.2	219.1	218.4	193.3	168.3	143.2	118.2	208.7	19.6	208.7	208.3	185.8	160.7	135.6	110.5
	57	214.1	17.3	214.1	214.1	196.0	170.9	145.9	120.8	205.0	19.6	205.0	205.0	186.2	161.1	136.0	110.9
7000	77	281.7	18.2	144.7	116.7	88.8	-	-	-	268.8	20.4	144.0	113.4	85.3	-	-	-
	72	259.4	17.9	182.5	154.6	126.7	98.7	-	-	247.4	20.1	179.0	150.9	122.8	94.7	-	-
	67	237.1	17.6	220.4	192.5	164.6	136.6	108.7	-	226.1	19.9	214.1	188.4	160.3	132.2	104.1	-
	62	223.7	17.3	223.7	223.4	206.1	176.9	150.2	122.3	213.4	19.7	213.4	213.2	199.1	170.4	142.9	114.8
	57	218.6	17.4	218.6	218.6	208.9	179.2	153.0	125.1	209.7	19.7	209.7	209.7	199.6	170.6	143.4	115.2
8000	77	287.5	18.3	155.9	125.1	94.3	-	-	-	274.7	20.5	158.2	122.1	91.0	-	-	-
	72	264.8	18.0	196.1	165.3	134.5	103.7	-	-	252.9	20.2	193.2	162.1	131.0	99.9	-	-
	67	242.0	17.7	236.3	205.5	174.7	143.9	113.1	-	231.1	19.9	228.3	202.2	171.1	140.0	108.8	-
	62	228.4	17.4	228.4	228.4	218.8	185.5	157.2	126.4	218.1	19.7	218.1	218.1	212.5	180.1	150.3	119.1
	57	223.1	17.4	223.1	223.1	221.8	187.5	160.1	129.3	214.3	19.8	214.3	214.3	212.9	180.1	150.7	119.6
9000	72	270.1	18.3	206.1	172.7	139.4	106.1	-	-	258.4	20.5	202.9	169.4	136.0	102.5	-	-
	67	246.9	18.0	244.1	214.5	181.1	147.8	114.5	-	236.1	20.2	234.7	211.0	177.5	144.1	110.6	-
	62	233.0	17.7	233.0	233.0	226.8	192.3	160.2	126.9	222.8	20.0	222.8	222.8	219.3	185.2	152.4	118.9
	57	227.6	17.7	227.6	227.6	226.9	191.9	160.3	127.0	218.9	20.0	218.9	218.9	218.2	183.9	151.3	117.8
10000	72	275.4	18.6	216.0	180.2	144.4	108.6	-	-	263.8	20.8	212.6	176.7	140.9	105.1	-	-
	67	251.8	18.2	251.8	223.4	187.6	151.8	116.0	-	241.1	20.5	241.1	219.8	184.0	148.2	112.3	-
	62	237.6	18.0	237.6	237.6	234.9	199.1	163.3	127.5	227.5	20.3	227.5	227.5	226.1	190.3	154.5	118.6
	57	232.1	18.0	232.1	232.1	232.1	196.3	160.5	124.7	223.6	20.3	223.6	223.6	223.6	187.7	151.9	116.1

YD240/ND240/NM240 (Continued)

Air on Evaporator Coil		Temperature of Air on Condenser Coil															
		Total Capacity[1] (MBh)	Total Input (kW)[2]	Sensible Capacity (MBh) Return Dry Bulb (°F)						Total Capacity[1] (MBh)	Total Input (kW)[2]	Sensible Capacity (MBh) Return Dry Bulb (°F)					
CFM	WB (°F)			90	85	80	75	70	65			90	85	80	75	70	65
		115°F								125°F							
6000	77	249.8	22.6	126.1	101.0	75.8	-	-	-	236.8	24.9	122.5	97.3	72.0	-	-	-
	72	229.9	22.3	160.6	135.4	110.3	85.1	-	-	217.9	24.6	156.4	131.2	106.0	80.8	-	-
	67	210.1	22.0	195.1	169.9	144.8	119.6	94.4	-	199.0	24.3	190.3	165.1	139.9	114.7	89.5	-
	62	198.2	21.9	198.2	198.2	178.3	153.1	128.0	102.8	187.8	24.3	187.8	187.8	170.7	145.5	120.3	95.1
	57	196.0	21.9	196.0	196.0	176.5	151.3	126.1	101.0	187.0	24.2	187.0	187.0	166.7	141.5	116.3	91.1
7000	77	255.8	22.7	143.3	110.0	81.7	-	-	-	242.9	24.9	142.6	106.7	78.2	-	-	-
	72	235.5	22.4	175.5	147.2	118.9	90.6	-	-	223.6	24.7	172.0	143.5	115.0	86.6	-	-
	67	215.2	22.1	207.7	184.4	156.1	127.8	99.5	-	204.2	24.4	201.3	180.3	151.8	123.4	94.9	-
	62	203.0	22.0	203.0	203.0	192.2	163.9	135.7	107.4	192.7	24.3	192.7	192.7	185.3	157.5	128.4	99.9
	57	200.8	22.0	200.8	200.8	190.3	162.0	133.7	105.4	191.9	24.3	191.9	191.9	181.0	153.4	124.1	95.6
8000	77	261.9	22.8	160.5	119.1	87.7	-	-	-	249.1	25.0	162.8	116.1	84.4	-	-	-
	72	241.1	22.5	190.4	159.0	127.5	96.1	-	-	229.3	24.8	187.5	155.8	124.1	92.3	-	-
	67	220.3	22.2	220.3	198.8	167.4	136.0	104.6	-	209.4	24.5	209.4	195.5	163.8	132.0	100.3	-
	62	207.8	22.1	207.8	207.8	206.2	174.8	143.3	111.9	197.6	24.4	197.6	197.6	197.6	169.4	136.4	104.7
	57	205.5	22.1	205.5	205.5	204.1	172.7	141.3	109.8	196.7	24.4	196.7	196.7	195.3	165.3	131.8	100.1
9000	72	246.6	22.7	199.8	166.1	132.5	98.8	-	-	234.9	25.0	196.6	162.8	129.0	95.2	-	-
	67	225.3	22.4	225.3	207.6	173.9	140.3	106.6	-	214.6	24.7	214.6	204.1	170.3	136.5	102.7	-
	62	212.6	22.3	212.6	212.6	211.8	178.2	144.5	110.9	202.4	24.6	202.4	202.4	202.4	171.1	136.7	102.9
	57	210.3	22.3	210.3	210.3	209.5	175.9	142.3	108.6	201.6	24.6	201.6	201.6	200.8	167.9	133.2	99.4
10000	72	252.2	23.0	209.2	173.3	137.4	101.6	-	-	240.5	25.2	205.7	169.9	134.0	98.1	-	-
	67	230.4	22.7	230.4	216.3	180.4	144.6	108.7	-	219.7	24.9	219.7	212.7	176.8	141.0	105.1	-
	62	217.4	22.5	217.4	217.4	217.4	181.5	145.7	109.8	207.3	24.8	207.3	207.3	207.3	172.8	136.9	101.0
	57	215.0	22.5	215.0	215.0	215.0	179.1	143.3	107.4	206.4	24.8	206.4	206.4	206.4	170.5	134.7	98.8

1 These capacities are gross ratings. For net capacity, deduct supply air blower motor, MBh. Example: Refer to the appropriate Blower Performance Table for the BHP of the supply air blower motor, MBh = 3.415 x kW and kW = BHP x 0.746 ÷ nameplate rated motor efficiency.

2 These ratings include the condenser fan motors and the compressor motors but not the supply air blower motor.

YC300/NC300/NL300

Air on Evaporator Coil		Temperature of Air on Condenser Coil															
		Total Capacity[1] (MBh)	Total Input (kW)[2]	Sensible Capacity (MBh) Return Dry Bulb (°F)						Total Capacity[1] (MBh)	Total Input (kW)[2]	Sensible Capacity (MBh) Return Dry Bulb (°F)					
CFM	WB (°F)			90	85	80	75	70	65			90	85	80	75	70	65
		75°F								**85°F**							
7500	77	390.0	20.3	208.7	177.2	145.6	-	-	-	362.1	23.0	180.5	148.9	117.3	-	-	-
	72	360.6	19.9	242.2	210.6	179.1	147.5	-	-	336.8	22.5	224.3	192.7	161.1	129.5	-	-
	67	331.2	19.5	275.6	244.1	212.5	181.0	149.4	-	311.5	21.9	268.0	236.5	204.9	173.3	141.7	-
	62	305.3	18.6	305.3	311.5	279.9	248.4	216.8	185.2	295.7	21.4	295.7	289.4	257.8	226.2	194.6	163.0
	57	308.5	18.5	308.5	314.3	282.8	251.2	219.7	188.1	298.5	21.3	298.5	293.5	261.9	230.3	198.7	167.1
8750	77	399.4	20.7	217.9	188.8	153.3	-	-	-	368.5	23.2	196.3	160.6	124.8	-	-	-
	72	369.3	20.4	258.8	223.4	187.9	152.4	-	-	342.8	22.7	242.9	207.2	171.4	135.7	-	-
	67	339.2	20.0	299.8	258.0	222.5	187.0	151.5	-	317.1	22.2	289.5	253.8	218.0	182.3	146.6	-
	62	312.8	19.0	312.8	315.9	293.5	259.6	222.5	187.0	300.9	21.6	300.9	297.8	274.3	238.6	202.9	167.1
	57	316.1	18.9	316.1	319.0	296.4	262.8	225.5	190.0	303.8	21.5	303.8	301.3	278.8	243.0	207.3	171.6
10000	77	408.8	21.2	227.1	200.4	161.0	-	-	-	374.9	23.4	212.1	172.2	132.4	-	-	-
	72	378.0	20.8	275.5	236.1	196.7	157.3	-	-	348.8	22.9	261.5	221.7	181.8	141.9	-	-
	67	347.2	20.4	323.9	271.8	232.4	193.0	153.6	-	322.6	22.4	311.0	271.1	231.2	191.3	151.5	-
	62	320.3	19.4	320.3	320.3	307.0	270.9	228.2	188.8	306.2	21.8	306.2	306.2	290.9	251.1	211.2	171.3
	57	323.7	19.3	323.7	323.7	310.1	274.3	231.3	191.9	309.1	21.7	309.1	309.1	295.6	255.7	215.9	176.0
11250	72	390.1	20.5	302.2	259.4	216.7	173.9	-	-	360.2	22.9	285.4	241.8	198.2	154.6	-	-
	67	358.3	20.2	346.7	299.2	256.5	213.7	170.9	-	333.2	22.3	327.4	295.7	252.1	208.5	164.9	-
	62	330.5	19.2	330.5	330.5	323.9	282.8	238.4	195.6	316.2	21.8	316.2	316.2	308.6	265.0	221.4	177.8
	57	334.0	19.1	334.0	334.0	327.2	286.2	241.7	198.9	319.3	21.7	319.3	319.3	312.5	268.9	225.3	181.7
12500	72	402.1	20.3	328.9	282.7	236.6	190.5	-	-	371.7	22.8	309.2	261.9	214.6	167.3	-	-
	67	369.4	19.9	369.4	326.6	280.5	234.4	188.3	-	343.8	22.3	343.8	320.3	272.9	225.6	178.3	-
	62	340.7	18.9	340.7	340.7	340.7	294.6	248.5	202.4	326.3	21.8	326.3	326.3	326.3	278.9	231.6	184.3
	57	344.3	18.8	344.3	344.3	344.3	298.2	252.1	205.9	329.4	21.6	329.4	329.4	329.4	282.1	234.8	187.5
		95°F								**105°F**							
7500	77	334.1	25.7	152.2	120.6	89.0	-	-	-	325.6	28.6	147.7	116.1	84.4	-	-	-
	72	313.0	25.0	206.4	174.7	143.1	111.4	-	-	300.7	27.9	200.5	168.9	137.2	105.6	-	-
	67	291.9	24.3	260.5	228.8	197.2	165.5	133.9	-	275.8	27.3	253.3	221.6	190.0	158.4	126.7	-
	62	286.0	24.3	286.0	267.3	235.6	204.0	172.3	140.7	266.2	27.0	266.2	251.2	219.5	187.9	156.3	124.6
	57	288.6	24.1	288.6	272.7	241.0	209.4	177.8	146.1	273.7	26.8	273.7	255.7	224.1	192.5	160.8	129.2
8750	77	337.6	25.6	174.7	132.3	96.4	-	-	-	328.2	28.6	177.7	128.5	92.4	-	-	-
	72	316.3	25.0	226.9	191.0	155.0	119.0	-	-	303.2	28.0	222.3	186.2	150.2	114.1	-	-
	67	294.9	24.3	279.2	249.6	213.6	177.6	141.6	-	278.1	27.3	266.8	244.0	207.9	171.9	135.8	-
	62	289.0	24.3	289.0	279.6	255.2	217.6	183.2	147.3	268.4	27.1	268.4	260.9	240.2	203.3	168.1	132.0
	57	291.6	24.1	291.6	283.7	261.1	223.3	189.1	153.1	275.9	26.9	275.9	266.9	245.2	208.2	173.1	137.0
10000	77	341.1	25.6	197.1	144.1	103.8	-	-	-	330.9	28.7	207.8	140.8	100.4	-	-	-
	72	319.6	24.9	247.5	207.2	166.9	126.5	-	-	305.6	28.1	244.1	203.6	163.1	122.6	-	-
	67	298.0	24.3	298.0	270.3	230.0	189.7	149.3	-	280.4	27.4	280.4	266.3	225.9	185.4	144.9	-
	62	292.0	24.2	292.0	292.0	274.8	231.2	194.2	153.8	270.6	27.1	270.6	270.6	260.8	218.7	179.8	139.4
	57	294.6	24.0	294.6	294.6	281.1	237.2	200.5	160.2	278.2	27.0	278.2	278.2	266.2	223.9	185.3	144.8
11250	72	330.4	25.2	268.6	224.1	179.7	135.3	-	-	316.3	28.2	265.2	220.4	175.6	130.8	-	-
	67	308.1	24.5	308.1	292.1	247.7	203.3	158.8	-	290.2	27.5	290.2	282.1	243.2	198.4	153.5	-
	62	301.9	24.4	301.9	301.9	293.3	247.2	204.4	160.0	280.0	27.2	280.0	280.0	275.1	229.5	185.5	140.7
	57	304.6	24.3	304.6	304.6	297.9	251.6	209.0	164.6	287.9	27.1	287.9	287.9	281.9	236.2	192.3	147.5
12500	72	341.2	25.4	289.6	241.1	192.5	144.0	-	-	327.0	28.3	286.4	237.2	188.1	139.0	-	-
	67	318.2	24.7	318.2	313.9	265.4	216.8	168.3	-	300.0	27.6	300.0	297.8	260.5	211.3	162.2	-
	62	311.8	24.7	311.8	311.8	311.8	263.3	214.7	166.2	289.5	27.4	289.5	289.5	289.5	240.4	191.2	142.1
	57	314.6	24.5	314.6	314.6	314.6	266.1	217.6	169.0	297.6	27.2	297.6	297.6	297.6	248.5	199.3	150.2

YC300/NC300/NL300 (Continued)

Air on Evaporator Coil		Temperature of Air on Condenser Coil															
		Total Capacity[1] (MBh)	Total Input (kW)[2]	Sensible Capacity (MBh) Return Dry Bulb (°F)						Total Capacity[1] (MBh)	Total Input (kW)[2]	Sensible Capacity (MBh) Return Dry Bulb (°F)					
CFM	WB (°F)			90	85	80	75	70	65			90	85	80	75	70	65
		115°F								**125°F**							
7500	77	317.1	31.5	143.2	111.6	79.9	-	-	-	308.6	34.3	138.7	107.1	75.4	-	-	-
	72	288.5	30.8	194.6	163.0	131.4	99.7	-	-	276.2	33.7	188.8	157.2	125.5	93.9	-	-
	67	259.8	30.2	246.1	214.4	182.8	151.2	119.5	-	243.8	33.1	238.9	207.2	175.6	144.0	112.4	-
	62	246.4	29.7	246.4	235.1	203.5	171.8	140.2	108.6	226.6	32.4	226.6	219.0	187.4	155.7	124.1	92.5
	57	258.8	29.6	258.8	238.8	207.2	175.5	143.9	112.3	243.9	32.3	243.9	221.9	190.3	158.6	127.0	95.4
8750	77	318.9	31.6	180.8	124.6	88.5	-	-	-	309.5	34.7	183.9	120.7	84.5	-	-	-
	72	290.1	31.0	217.6	181.5	145.4	109.2	-	-	277.0	34.0	212.9	176.7	140.6	104.4	-	-
	67	261.3	30.4	254.4	238.4	202.3	166.1	130.0	-	244.4	33.4	242.0	232.8	196.6	160.4	124.2	-
	62	247.8	29.9	247.8	242.1	225.1	189.0	152.9	116.7	227.2	32.6	227.2	223.4	210.1	174.7	137.7	101.5
	57	260.2	29.7	260.2	250.2	229.2	193.1	157.0	120.9	244.6	32.6	244.6	233.5	213.3	178.0	140.9	104.7
10000	77	320.7	31.8	218.4	137.6	97.0	-	-	-	310.4	35.0	229.1	134.3	93.6	-	-	-
	72	291.7	31.2	240.6	200.0	159.3	118.7	-	-	277.7	34.3	237.1	196.3	155.6	114.8	-	-
	67	262.7	30.5	262.7	262.3	221.7	181.1	140.5	-	245.1	33.7	245.1	245.1	217.6	176.8	136.1	-
	62	249.2	30.0	249.2	249.2	246.8	206.1	165.5	124.9	227.8	32.9	227.8	227.8	227.8	193.6	151.2	110.4
	57	261.7	29.9	261.7	261.7	251.3	210.7	170.0	129.4	245.2	32.9	245.2	245.2	236.3	197.4	154.8	114.1
11250	72	302.2	31.2	261.9	216.7	171.5	126.3	-	-	288.2	34.2	258.5	213.0	167.4	121.8	-	-
	67	272.2	30.5	272.2	272.0	238.6	193.5	148.3	-	254.3	33.6	254.3	254.3	234.1	188.5	143.0	-
	62	258.2	30.0	258.2	258.2	257.0	211.8	166.6	121.4	236.3	32.8	236.3	236.3	236.3	194.1	147.7	102.1
	57	271.1	29.9	271.1	271.1	265.9	220.8	175.6	130.4	254.4	32.8	254.4	254.4	250.0	205.3	158.9	113.3
12500	72	312.8	31.2	283.2	233.4	183.7	133.9	-	-	298.6	34.1	279.9	229.6	179.2	128.8	-	-
	67	281.7	30.6	281.7	281.7	255.6	205.8	156.0	-	263.5	33.5	263.5	263.5	250.6	200.3	149.9	-
	62	267.2	30.0	267.2	267.2	267.2	217.4	167.7	117.9	244.9	32.7	244.9	244.9	244.9	194.5	144.2	93.8
	57	280.6	29.9	280.6	280.6	280.6	230.9	181.1	131.4	263.6	32.7	263.6	263.6	263.6	213.2	162.9	112.5

1 These capacities are gross ratings. For net capacity, deduct supply air blower motor, MBh. Example: Refer to the appropriate Blower Performance Table for the BHP of the supply air blower motor, MBh = 3.415 x kW and kW = BHP x 0.746 ÷ nameplate rated motor efficiency.

2 These ratings include the condenser fan motors and the compressor motors but not the supply air blower motor.

Condenser Only Cooling Capacities

Condenser Only Ratings

Model	Suction Press. and Corresponding Temp.		Temperature of Air on Condenser Coil °F																	
			65			75			85			95			105			115		
	PSIG	°F	MBH	KW	EER	MBH	KW	EER	MBH	KW	EER	MBH	KW	EER	MBH	KW	EER	MBH	KW	EER
YC090	108	35	78	4.8	16.1	75	5.3	14.2	72	5.8	12.4	68	6.5	10.3	61	7.6	8.1	55	8.6	6.4
	120	40	88	5.0	17.6	84	5.5	15.5	81	5.9	13.6	76	6.7	11.4	70	7.7	9.1	64	8.7	7.3
	131	45	98	5.1	19.1	94	5.6	16.7	89	6.1	14.7	85	6.8	12.4	79	7.8	10.0	72	8.9	8.2
	143	50	108	5.3	20.5	103	5.8	17.8	98	6.2	15.7	93	6.9	13.4	87	8.0	10.9	81	9.0	9.0
	157	55	118	5.4	21.8	112	5.9	18.9	107	6.4	16.7	102	7.1	14.4	96	8.1	11.8	90	9.2	9.8
YE090	108	35	78	4.8	16.1	75	5.3	14.2	72	5.8	12.4	68	6.5	10.3	61	7.6	8.1	55	8.6	6.4
	120	40	88	5	17.6	84	5.5	15.5	81	5.9	13.6	76	6.7	11.4	70	7.7	9.1	64	8.7	7.3
	131	45	98	5.1	19.1	94	5.6	16.7	89	6.1	14.7	85	6.8	12.4	79	7.8	10	72	8.9	8.2
	143	50	108	5.3	20.5	103	5.8	17.8	98	6.2	15.7	93	6.9	13.4	87	8	10.9	81	9	9
	157	55	118	5.4	21.8	112	5.9	18.9	107	6.4	16.7	102	7.1	14.4	96	8.1	11.8	90	9.2	9.8
YC120	108	35	102	6.5	15.8	95	7.3	13.1	89	8.0	11.1	84	9.0	9.3	78	10.3	7.6	73	11.4	6.4
	120	40	120	6.6	18.1	111	7.4	15.1	104	8.2	12.8	97	9.1	10.6	90	10.4	8.7	84	11.5	7.3
	131	45	138	6.7	20.4	128	7.5	17.1	119	8.3	14.4	110	9.3	11.9	102	10.5	9.7	94	11.6	8.1
	143	50	155	6.9	22.6	145	7.6	19.0	134	8.4	16.0	123	9.4	13.2	114	10.6	10.8	105	11.7	8.9
	157	55	173	7.0	24.7	161	7.7	20.8	149	8.5	17.5	136	9.5	14.4	126	10.7	11.8	115	11.8	9.7
YD120	108	35	106	6.4	16.3	96	7.2	13.4	88	7.9	11.2	82	8.8	9.3	73	9.8	7.5	65	11.1	5.9
	120	40	120	6.5	18.4	111	7.3	15.2	103	8.0	12.8	95	9.0	10.5	85	10.0	8.5	78	11.3	6.9
	131	45	136	6.7	20.5	126	7.4	17.0	117	8.2	14.3	108	9.1	11.8	97	10.2	9.5	90	11.5	7.9
	143	50	152	6.8	22.5	142	7.5	18.7	132	8.3	15.8	120	9.3	13.0	109	10.4	10.5	103	11.6	8.8
	157	55	168	6.9	24.4	157	7.7	20.4	146	8.5	17.2	133	9.4	14.1	121	10.6	11.4	115	11.8	9.8
YC150	108	35	190	8.2	23.2	190	9.1	20.8	113	9.8	11.5	105	11.1	9.5	102	12.4	8.2	98	13.8	7.1
	120	40	190	8.5	22.4	190	9.4	20.3	127	10.1	12.6	118	11.3	10.4	113	12.6	8.9	108	14.1	7.7
	131	45	190	8.8	21.7	190	9.6	19.8	140	10.3	13.6	131	11.5	11.3	123	12.8	9.6	118	14.4	8.2
	143	50	190	9.1	21.0	190	9.8	19.3	154	10.6	14.5	144	11.8	12.2	134	13.0	10.3	127	14.6	8.7
	157	55	190	9.3	20.3	190	10.1	18.9	168	10.9	15.4	156	12.0	13.0	145	13.2	10.9	137	14.9	9.2
YD150	108	35	132	8.4	15.7	124	9.2	13.5	119	9.9	11.9	109	11.0	9.9	103	12.4	8.3	94	13.6	6.9
	120	40	149	8.6	17.4	140	9.4	14.9	133	10.2	13.1	123	11.2	10.9	116	12.7	9.1	107	13.9	7.7
	131	45	166	8.7	19.0	156	9.6	16.3	148	10.4	14.2	136	11.5	11.8	128	13.0	9.9	119	14.3	8.3
	143	50	183	8.9	20.5	173	9.8	17.6	163	10.7	15.2	149	11.7	12.7	141	13.3	10.6	131	14.6	9.0
	157	55	200	9.1	21.9	189	10.0	18.8	177	10.9	16.2	163	12.0	13.6	153	13.5	11.3	144	14.9	9.6
YC180	108	35	169	9.7	17.4	153	10.8	14.3	135	11.5	11.7	125	12.7	9.8	116	14.5	8.0	104	16.0	6.5
	120	40	184	10.1	18.2	170	11.0	15.4	154	11.9	13.0	142	13.0	10.9	133	14.8	9.0	121	16.4	7.4
	131	45	198	10.4	19.1	186	11.3	16.4	172	12.2	14.1	160	13.4	12.0	149	15.1	9.9	137	16.7	8.2
	143	50	213	10.7	19.8	203	11.6	17.5	191	12.6	15.2	178	13.7	13.0	166	15.4	10.7	153	17.0	9.0
	157	55	227	11.0	20.6	219	11.9	18.4	210	12.9	16.2	196	14.0	14.0	182	15.7	11.6	169	17.3	9.8
YD180	108	35	160	10.1	15.9	149	11.0	13.6	141	11.6	12.2	136	12.8	10.6	127	14.5	8.8	121	16.3	7.4
	120	40	179	10.2	17.6	168	11.2	15.0	158	11.9	13.3	151	13.1	11.5	141	14.8	9.5	133	16.6	8.0
	131	45	199	10.3	19.2	186	11.3	16.5	175	12.2	14.4	166	13.4	12.3	154	15.1	10.2	145	16.8	8.6
	143	50	218	10.5	20.8	205	11.5	17.8	192	12.5	15.4	180	13.8	13.1	168	15.4	10.9	157	17.1	9.2
	157	55	238	10.6	22.4	224	11.7	19.2	209	12.8	16.4	195	14.1	13.9	181	15.7	11.5	169	17.4	9.7
YC240	108	35	215	12.5	17.2	200	13.6	14.7	185	14.8	12.5	171	16.3	10.5	155	18.2	8.5	139	19.7	7.0
	120	40	244	13.1	18.7	228	14.2	16.1	213	15.3	13.9	197	16.9	11.7	180	18.8	9.6	163	20.5	7.9
	131	45	274	13.6	20.1	257	14.8	17.4	240	15.9	15.2	223	17.4	12.8	204	19.4	10.5	186	21.2	8.8
	143	50	303	14.2	21.4	286	15.4	18.6	268	16.4	16.4	249	18.0	13.8	229	20.0	11.4	210	21.9	9.6
	157	55	332	14.8	22.5	315	15.9	19.7	296	17.0	17.5	275	18.6	14.8	253	20.6	12.3	233	22.6	10.3
YD240	108	35	210	12.4	17.0	196	13.6	14.3	184	15.1	12.2	173	16.7	10.4	157	18.9	8.3	137	21.2	6.5
	120	40	237	12.7	18.6	221	14.0	15.8	208	15.4	13.5	195	17.0	11.5	179	19.2	9.4	161	21.4	7.5
	131	45	264	13.1	20.1	247	14.3	17.3	231	15.7	14.8	217	17.3	12.6	201	19.5	10.3	184	21.7	8.5
	143	50	291	13.5	21.6	273	14.7	18.6	255	15.9	16.0	239	17.6	13.6	223	19.8	11.3	207	22.0	9.4
	157	55	317	13.8	22.9	299	15.0	19.9	279	16.2	17.2	261	17.9	14.6	245	20.1	12.2	230	22.3	10.4
YC300	108	35	271	17.3	15.7	245	18.6	13.2	215	20.0	10.8	201	22.5	9.0	193	24.9	7.8	188	26.9	7.0
	120	40	310	17.8	17.4	282	19.3	14.6	253	20.7	12.2	236	23.1	10.2	223	25.6	8.7	213	27.9	7.6
	131	45	348	18.4	19.0	320	20.0	16.0	290	21.4	13.6	271	23.7	11.4	253	26.3	9.6	238	28.8	8.3
	143	50	387	18.9	20.4	357	20.6	17.3	328	22.2	14.8	306	24.2	12.6	283	27.1	10.4	263	29.7	8.8
	157	55	425	19.5	21.8	395	21.3	18.5	365	22.9	16.0	340	24.8	13.7	313	27.8	11.2	288	30.7	9.4

Heat Pump and Air Handling Cooling Capacities

PC090/NL090 Cooling Capacities

Air on Evaporator Coil		Temperature of Air on Condenser Coil															
		Total Capacity[1] (MBh)	Total Input (kW)[2]	Sensible Capacity (MBh) Return Dry Bulb (°F)						Total Capacity[1] (MBh)	Total Input (kW)[2]	Sensible Capacity (MBh) Return Dry Bulb (°F)					
CFM	WB (°F)			90	85	80	75	70	65			90	85	80	75	70	65
		75°F								**85°F**							
2250	77	112.8	5.9	54.5	44.9	35.3	-	-	-	107.0	6.5	51.9	42.4	32.9	-	-	-
	72	104.8	5.8	68.7	59.1	49.5	40.0	-	-	99.3	6.4	66.3	56.8	47.3	37.9	-	-
	67	96.7	5.7	82.9	73.4	63.8	54.2	44.6	-	91.7	6.3	80.8	71.3	61.8	52.3	42.8	-
	62	89.0	5.5	89.0	89.0	80.5	70.9	61.3	51.7	84.4	6.2	84.4	84.4	76.5	67.0	57.5	48.0
	57	88.9	5.6	88.9	88.9	80.5	70.9	61.4	51.8	84.6	6.2	84.6	84.6	75.7	66.2	56.8	47.3
2625	77	117.0	5.9	58.7	48.7	37.9	-	-	-	110.7	6.6	57.0	46.2	35.5	-	-	-
	72	108.6	5.8	74.8	64.0	53.2	42.5	-	-	102.7	6.5	72.5	61.8	51.1	40.4	-	-
	67	100.3	5.7	90.9	79.3	68.5	57.8	47.0	-	94.8	6.3	88.1	77.4	66.7	56.0	45.3	-
	62	92.3	5.6	92.3	92.3	86.5	76.2	64.9	54.1	87.3	6.2	87.3	87.3	82.6	71.9	61.1	50.4
	57	92.2	5.6	92.2	92.2	86.6	76.3	65.0	54.2	87.5	6.2	87.5	87.5	81.7	71.0	60.3	49.6
3000	77	121.1	5.9	63.0	52.6	40.6	-	-	-	114.3	6.6	62.0	50.1	38.1	-	-	-
	72	112.5	5.8	80.9	68.9	56.9	45.0	-	-	106.1	6.5	78.7	66.8	54.9	42.9	-	-
	67	103.8	5.7	98.9	85.3	73.3	61.3	49.3	-	97.9	6.4	95.4	83.5	71.6	59.6	47.7	-
	62	95.6	5.6	95.6	95.6	92.5	81.5	68.6	56.6	90.2	6.3	90.2	90.2	88.6	76.7	64.8	52.8
	57	95.4	5.6	95.4	95.4	92.6	81.7	68.6	56.6	90.4	6.2	90.4	90.4	87.7	75.8	63.9	51.9
3375	72	114.6	5.8	88.6	75.6	62.6	49.6	-	-	108.6	6.5	85.9	73.0	60.0	47.1	-	-
	67	105.7	5.7	103.3	93.6	80.6	67.6	54.6	-	100.3	6.4	99.0	91.3	78.3	65.4	52.4	-
	62	97.4	5.6	97.4	97.4	95.8	83.3	69.8	56.8	92.3	6.3	92.3	92.3	91.6	78.6	65.7	52.7
	57	97.2	5.6	97.2	97.2	95.8	83.3	69.7	56.7	92.5	6.3	92.5	92.5	91.2	78.3	65.3	52.3
3750	72	116.6	5.8	96.3	82.3	68.3	54.2	-	-	111.2	6.5	93.1	79.2	65.2	51.2	-	-
	67	107.7	5.7	107.7	101.9	87.9	73.8	59.8	-	102.6	6.4	102.6	99.0	85.1	71.1	57.1	-
	62	99.1	5.6	99.1	99.1	99.1	85.1	71.0	57.0	94.5	6.3	94.5	94.5	94.5	80.5	66.5	52.6
	57	99.0	5.6	99.0	99.0	99.0	84.9	70.9	56.8	94.7	6.3	94.7	94.7	94.7	80.7	66.7	52.8
		95°F								**105°F**							
2250	77	101.2	7.2	49.3	39.9	30.6	-	-	-	100.5	8.0	59.5	50.1	40.7	-	-	-
	72	93.9	7.1	63.9	54.6	45.2	35.8	-	-	90.2	7.9	67.7	58.3	48.9	39.4	-	-
	67	86.6	7.0	78.6	69.2	59.8	50.4	41.0	-	79.9	7.8	75.8	66.4	57.0	47.6	38.2	-
	62	79.8	6.9	79.8	79.8	72.5	63.1	53.7	44.4	74.8	7.7	74.8	74.8	67.3	57.9	48.5	39.0
	57	80.3	6.8	80.3	80.3	70.9	61.5	52.1	42.8	74.9	7.7	74.9	74.9	65.7	56.2	46.8	37.4
2625	77	104.3	7.3	55.2	43.8	33.1	-	-	-	103.7	8.0	68.8	55.1	44.4	-	-	-
	72	96.8	7.1	70.2	59.6	49.0	38.3	-	-	93.0	8.0	74.6	63.9	53.3	42.6	-	-
	67	89.3	7.0	85.3	75.4	64.8	54.2	43.5	-	82.4	7.9	80.4	72.8	62.1	51.4	40.8	-
	62	82.3	6.9	82.3	82.3	78.6	67.5	57.4	46.7	77.2	7.7	77.2	77.2	73.3	62.4	52.0	41.3
	57	82.8	6.9	82.8	82.8	76.9	65.7	55.6	45.0	77.2	7.7	77.2	77.2	71.5	60.6	50.2	39.5
3000	77	107.5	7.3	61.0	47.6	35.7	-	-	-	106.8	8.1	78.1	60.0	48.1	-	-	-
	72	99.7	7.2	76.5	64.6	52.8	40.9	-	-	95.9	8.0	81.5	69.6	57.7	45.8	-	-
	67	92.0	7.0	92.0	81.7	69.8	57.9	46.1	-	84.9	7.9	84.9	79.1	67.2	55.3	43.4	-
	62	84.7	6.9	84.7	84.7	84.7	71.9	61.0	49.1	79.6	7.8	79.6	79.6	79.3	66.9	55.5	43.6
	57	85.3	6.9	85.3	85.3	82.9	69.9	59.1	47.2	79.6	7.7	79.6	79.6	77.4	64.9	53.6	41.6
3375	72	102.7	7.2	83.2	70.3	57.4	44.6	-	-	98.8	8.0	87.6	76.1	63.2	50.2	-	-
	67	94.8	7.1	94.8	88.9	76.0	63.1	50.2	-	87.5	7.9	87.5	84.2	73.6	60.6	47.7	-
	62	87.3	6.9	87.3	87.3	87.3	73.9	61.5	48.6	82.0	7.8	82.0	82.0	81.8	68.6	55.9	43.0
	57	87.8	6.9	87.8	87.8	86.6	73.2	60.8	48.0	82.0	7.8	82.0	82.0	80.9	67.7	55.0	42.1
3750	72	105.7	7.2	89.9	76.0	62.1	48.2	-	-	101.7	8.0	93.8	82.7	68.7	54.7	-	-
	67	97.5	7.1	97.5	96.1	82.2	68.3	54.4	-	90.1	7.9	90.1	89.4	79.9	65.9	52.0	-
	62	89.8	7.0	89.8	89.8	89.8	75.9	62.0	48.1	84.4	7.8	84.4	84.4	84.4	70.4	56.4	42.4
	57	90.4	6.9	90.4	90.4	90.4	76.5	62.6	48.7	84.4	7.8	84.4	84.4	84.4	70.5	56.5	42.5

PC090/NL090 Cooling Capacities (Continued)

Air on Evaporator Coil		Temperature of Air on Condenser Coil															
		Total Capacity[1] (MBh)	Total Input (kW)[2]	Sensible Capacity (MBh) Return Dry Bulb (°F)						Total Capacity[1] (MBh)	Total Input (kW)[2]	Sensible Capacity (MBh) Return Dry Bulb (°F)					
CFM	WB (°F)			90	85	80	75	70	65			90	85	80	75	70	65
		115°F								125°F							
2250	77	99.8	8.8	69.7	60.3	50.9	-	-	-	99.1	9.6	79.9	70.5	61.0	-	-	-
	72	86.5	8.7	71.4	62.0	52.6	43.1	-	-	82.7	9.5	75.2	65.7	56.3	46.8	-	-
	67	73.1	8.7	73.1	63.7	54.2	44.8	35.4	-	66.4	9.5	66.4	60.9	51.5	42.0	32.6	-
	62	69.9	8.5	69.9	69.9	62.0	52.6	43.2	33.7	64.9	9.4	64.9	64.9	56.8	47.3	37.9	28.4
	57	69.5	8.5	69.5	69.5	60.4	50.9	41.5	32.1	64.1	9.4	64.1	64.1	55.1	45.6	36.2	26.7
2625	77	103.0	8.8	82.4	66.4	55.7	-	-	-	102.3	9.6	92.7	77.7	67.0	-	-	-
	72	89.2	8.8	78.9	68.2	57.6	46.9	-	-	85.4	9.6	83.3	72.6	61.9	51.2	-	-
	67	75.5	8.7	75.5	70.1	59.4	48.7	38.0	-	68.5	9.6	68.5	67.4	56.7	46.0	35.3	-
	62	72.1	8.6	72.1	72.1	67.9	57.3	46.6	35.9	67.0	9.4	67.0	67.0	62.6	52.1	41.2	30.5
	57	71.7	8.6	71.7	71.7	66.1	55.4	44.8	34.1	66.2	9.4	66.2	66.2	60.7	50.3	39.3	28.6
3000	77	106.2	8.9	95.1	72.5	60.5	-	-	-	105.6	9.7	105.6	84.9	73.0	-	-	-
	72	92.0	8.8	86.4	74.5	62.6	50.6	-	-	88.1	9.6	88.1	79.4	67.5	55.5	-	-
	67	77.8	8.7	77.8	76.5	64.6	52.6	40.7	-	70.7	9.6	70.7	70.7	62.0	50.0	38.0	-
	62	74.4	8.6	74.4	74.4	73.8	61.9	50.0	38.0	69.2	9.5	69.2	69.2	68.4	56.9	44.5	32.5
	57	73.9	8.6	73.9	73.9	71.9	59.9	48.0	36.1	68.3	9.5	68.3	68.3	66.4	54.9	42.4	30.5
3375	72	94.8	8.8	92.1	81.9	68.9	55.9	-	-	90.9	9.7	90.9	87.7	74.6	61.5	-	-
	67	80.2	8.8	80.2	79.6	71.1	58.1	45.1	-	72.9	9.6	72.9	72.9	68.7	55.6	42.5	-
	62	76.7	8.6	76.7	76.7	76.4	63.4	50.4	37.4	71.3	9.5	71.3	71.3	71.0	58.1	44.8	31.7
	57	76.2	8.6	76.2	76.2	75.2	62.2	49.2	36.2	70.4	9.5	70.4	70.4	69.5	56.7	43.3	30.3
3750	72	97.7	8.8	97.7	89.3	75.2	61.1	-	-	93.7	9.7	93.7	93.7	81.8	67.6	-	-
	67	82.6	8.8	82.6	82.6	77.7	63.6	49.5	-	75.2	9.6	75.2	75.2	75.2	61.2	47.0	-
	62	79.0	8.7	79.0	79.0	79.0	64.9	50.8	36.7	73.5	9.5	73.5	73.5	73.5	59.3	45.2	31.0
	57	78.5	8.6	78.5	78.5	78.5	64.4	50.3	36.3	72.6	9.5	72.6	72.6	72.6	58.4	44.2	30.0

1 These capacities are gross ratings. For net capacity, deduct supply air blower motor, MBh. Example: Refer to the appropriate Blower Performance Table for the BHP of the supply air blower motor, MBh = 3.415 x kW and kW = BHP x 0.746 ÷ nameplate rated motor efficiency.

2 These ratings include the condenser fan motors and the compressor motors but not the supply air blower motor.

PE090/NC090/NL090 Cooling Capacities

Air on Evaporator Coil		Temperature of Air on Condenser Coil															
		Total Capacity[1] (MBh)	Total Input (kW)[2]	Sensible Capacity (MBh) Return Dry Bulb (°F)						Total Capacity[1] (MBh)	Total Input (kW)[2]	Sensible Capacity (MBh) Return Dry Bulb (°F)					
CFM	WB (°F)			90	85	80	75	70	65			90	85	80	75	70	65
		75°F								**85°F**							
1875	77	107.5	5.3	54.6	46.1	37.6	-	-	-	102.0	5.9	52.2	43.7	35.3	-	-	-
	72	96.9	5.2	65.0	55.6	46.2	36.8	-	-	91.9	5.8	63.0	53.6	44.2	34.7	-	-
	67	86.3	5.1	75.4	65.1	54.8	45.9	36.9	-	81.8	5.8	73.9	63.5	53.0	44.0	35.0	-
	62	83.0	5.0	83.0	73.5	63.4	53.6	46.5	38.0	78.7	5.7	78.7	71.4	61.9	52.6	44.7	36.2
2250	77	108.1	5.3	60.9	49.5	38.0	-	-	-	102.5	5.9	59.5	47.8	36.0	-	-	-
	72	99.1	5.2	71.3	60.1	48.906	37.7	-	-	94.1	5.8	69.4	58.2	47.0	35.7	-	-
	67	90.1	5.1	81.6	70.7	59.8	48.9	38.0	-	85.7	5.8	79.2	68.5	57.9	47.0	36.1	-
	62	87.7	5.1	87.7	79.2	70.7	59.0	49.5	38.9	83.3	5.7	83.3	76.7	68.8	57.7	47.8	37.3
	57	85.3	5.0	85.3	85.3	81.6	71.3	61.0	50.6	80.9	5.7	80.9	80.9	79.7	69.5	59.4	49.2
2625	77	108.6	5.3	67.3	52.8	38.4	-	-	-	102.9	5.9	66.8	51.8	36.8	-	-	-
	72	101.3	5.2	77.5	64.5	51.6	38.6	-	-	96.2	5.8	75.7	62.7	49.7	36.8	-	-
	67	93.9	5.2	87.7	76.2	64.8	52.0	39.1	-	89.6	5.8	84.5	73.6	62.7	50.0	37.3	-
	62	92.3	5.1	91.8	84.9	78.0	64.5	52.5	39.8	87.8	5.8	87.8	82.0	75.7	62.9	50.8	38.3
	57	90.7	5.1	90.7	90.7	88.9	78.6	66.0	53.3	86.1	5.7	86.1	86.1	86.1	76.5	64.3	52.1
3000	77	109.2	5.3	73.6	56.1	38.7	-	-	-	103.4	5.9	74.1	55.8	37.5	-	-	-
	72	103.5	5.2	83.7	69.0	54.3	39.6	-	-	98.4	5.9	82.0	67.3	52.5	37.8	-	-
	67	97.8	5.2	93.8	81.8	69.8	55.0	40.2	-	93.4	5.8	89.8	78.7	67.6	53.0	38.5	-
	62	97.0	5.2	96.0	90.7	85.3	69.9	55.6	40.7	92.4	5.8	92.0	87.3	82.6	68.0	53.8	39.4
	57	96.2	5.1	96.2	96.2	96.2	85.9	70.9	56.0	91.3	5.8	91.3	91.3	91.3	83.4	69.2	55.0
3375	72	105.7	5.2	89.9	73.4	56.9	40.5	-	-	100.6	5.9	88.3	71.8	55.3	38.8	-	-
	67	101.6	5.2	99.9	87.4	74.8	58.0	41.3	-	97.3	5.8	95.1	83.8	72.4	56.0	39.6	-
	62	101.6	5.2	100.1	96.4	92.7	75.4	58.6	41.6	96.9	5.8	95.7	92.6	89.5	73.1	56.9	40.5
	57	101.7	5.2	99.3	99.3	99.3	93.2	75.9	58.6	96.5	5.8	95.7	95.7	95.7	90.4	74.1	57.9
3750	72	107.9	5.3	96.1	77.9	59.619	41.4	-	-	102.8	5.9	94.6	76.4	58.1	39.9	-	-
	67	105.4	5.2	105.4	92.9	79.8	61.1	42.4	-	101.2	5.8	100.4	88.9	77.3	59.0	40.8	-
	62	106.3	5.2	104.3	102.1	100.0	80.8	61.6	42.5	101.5	5.9	99.4	97.9	96.5	78.2	59.9	41.6
	57	107.1	5.2	102.5	102.5	102.5	100.5	80.9	61.3	101.7	5.9	98.3	98.3	98.3	97.3	79.1	60.8
		95°F								**105°F**							
1875	77	96.4	6.5	49.7	41.3	33.0	-	-	-	89.2	7.3	48.3	39.7	31.2	-	-	-
	72	86.8	6.4	61.1	51.6	42.1	32.6	-	-	80.6	7.2	59.2	49.8	40.3	30.9	-	-
	67	77.2	6.4	72.4	61.8	51.2	42.1	33.1	-	72.0	7.1	70.2	59.8	49.5	40.3	31.1	-
	62	74.4	6.3	74.4	69.2	60.3	51.7	43.0	34.3	71.6	7.1	71.6	66.1	58.6	49.7	40.7	31.7
2250	77	96.8	6.5	58.0	46.1	34.1	-	-	-	89.8	7.3	56.0	43.9	31.7	-	-	-
	72	89.0	6.5	67.5	56.2	44.994	33.8	-	-	82.9	7.2	65.0	54.0	42.9	31.8	-	-
	67	81.2	6.4	76.9	66.4	55.9	45.1	34.3	-	76.0	7.2	74.0	64.0	54.0	43.1	32.3	-
	62	78.9	6.4	78.9	74.1	66.8	56.4	46.0	35.6	75.6	7.1	75.6	70.9	65.2	54.5	43.8	33.1
	57	76.6	6.3	76.6	76.6	76.6	67.8	57.8	47.8	75.1	7.1	75.1	75.1	75.1	65.8	55.4	44.9
2625	77	97.2	6.5	66.4	50.8	35.2	-	-	-	90.4	7.3	63.8	48.0	32.2	-	-	-
	72	91.2	6.5	73.9	60.9	47.9	34.9	-	-	85.2	7.2	70.8	58.1	45.4	32.7	-	-
	67	85.2	6.4	81.4	71.0	60.6	48.1	35.5	-	79.9	7.2	77.9	68.2	58.6	46.0	33.4	-
	62	83.3	6.4	83.3	79.0	73.4	61.2	49.1	36.9	79.6	7.2	79.6	75.8	71.7	59.3	46.9	34.5
	57	81.5	6.4	81.5	81.5	81.5	74.4	62.6	50.9	79.2	7.1	79.2	79.2	79.2	72.6	60.4	48.1
3000	77	97.6	6.5	74.7	55.5	36.3	-	-	-	91.0	7.2	71.5	52.1	32.7	-	-	-
	72	93.4	6.5	80.3	65.6	50.8	36.1	-	-	87.4	7.2	76.6	62.3	47.9	33.6	-	-
	67	89.1	6.4	85.9	75.6	65.3	51.0	36.7	-	83.8	7.2	81.7	72.4	63.1	48.9	34.6	-
	62	87.8	6.4	87.8	83.9	79.9	66.0	52.1	38.2	83.6	7.2	82.9	80.6	78.3	64.1	50.0	35.9
	57	86.5	6.4	86.5	86.5	86.5	81.0	67.5	54.0	83.3	7.2	83.3	83.3	83.3	79.4	65.4	51.3
3375	72	95.5	6.5	86.7	70.2	53.7	37.2	-	-	89.7	7.2	82.4	66.4	50.5	34.5	-	-
	67	93.1	6.5	90.4	80.2	70.1	54.0	37.9	-	87.8	7.2	85.6	76.6	67.6	51.7	35.8	-
	62	92.2	6.4	91.2	88.8	86.4	70.8	55.1	39.5	87.6	7.2	86.0	85.4	84.8	69.0	53.1	37.2
	57	91.4	6.4	91.4	91.4	91.4	87.5	72.3	57.1	87.4	7.2	86.5	86.5	86.5	86.2	70.4	54.6
3750	72	97.7	6.5	93.1	74.9	56.619	38.4	-	-	92.0	7.2	88.2	70.6	53.0	35.4	-	-
	67	97.1	6.5	94.8	84.8	74.8	57.0	39.1	-	91.7	7.2	89.4	80.8	72.2	54.6	37.0	-
	62	96.7	6.5	94.5	93.7	92.9	75.5	58.2	40.8	91.6	7.2	89.2	89.2	89.2	73.8	56.2	38.6
	57	96.3	6.5	94.1	94.1	94.1	94.1	77.2	60.3	91.4	7.2	88.9	88.9	88.9	88.9	75.4	57.8

PE090/NC090/NL090 Cooling Capacities (Continued)

Air on Evaporator Coil		Temperature of Air on Condenser Coil															
		Total Capacity[1] (MBh)	Total Input (kW)[2]	Sensible Capacity (MBh) Return Dry Bulb (°F)						Total Capacity[1] (MBh)	Total Input (kW)[2]	Sensible Capacity (MBh) Return Dry Bulb (°F)					
CFM	WB (°F)			90	85	80	75	70	65			90	85	80	75	70	65
		115°F								125°F							
1875	77	81.9	8.1	46.9	38.1	29.4	-	-	-	74.6	8.9	45.5	36.6	27.6	-	-	-
	72	74.3	8.0	57.4	48.0	38.6	29.2	-	-	68.1	8.8	55.6	46.2	36.8	27.5	-	-
	67	66.8	7.9	66.8	57.9	47.8	38.4	29.1	-	61.6	8.6	61.6	55.9	46.0	36.6	27.1	-
	62	68.7	7.9	68.7	62.9	56.9	47.7	38.4	29.2	65.8	8.7	64.2	59.7	55.3	45.7	36.2	26.6
2250	77	82.7	8.1	54.0	41.7	29.4	-	-	-	75.7	8.8	52.0	39.5	27.0	-	-	-
	72	76.7	8.0	62.6	51.7	40.7	29.8	-	-	70.6	8.7	60.2	49.4	38.6	27.8	-	-
	67	70.7	7.9	70.7	61.7	52.1	41.2	30.2	-	65.5	8.7	65.5	59.3	50.2	39.2	28.2	-
	62	72.2	7.9	71.9	67.7	63.5	52.6	41.6	30.6	68.9	8.7	67.1	64.5	61.9	50.6	39.4	28.1
	57	73.7	7.9	72.5	72.5	72.5	63.9	52.9	41.9	72.2	8.7	65.8	65.8	65.8	62.0	50.5	39.0
2625	77	83.6	8.0	61.1	45.2	29.3	-	-	-	76.8	8.8	58.5	42.4	26.3	-	-	-
	72	79.1	8.0	67.7	55.3	42.9	30.5	-	-	73.1	8.7	64.7	52.5	40.4	28.2	-	-
	67	74.7	7.9	74.4	65.4	56.5	43.9	31.4	-	69.4	8.7	69.4	62.7	54.4	41.9	29.3	-
	62	75.8	7.9	74.9	72.5	70.1	57.4	44.7	32.1	72.0	8.7	70.0	69.2	68.5	55.5	42.6	29.6
	57	76.9	7.9	75.3	75.3	75.3	70.9	58.1	45.3	74.6	8.7	69.0	69.0	69.0	69.0	55.8	42.5
3000	77	84.5	8.0	68.2	48.7	29.2	-	-	-	77.9	8.8	65.0	45.3	25.7	-	-	-
	72	81.5	8.0	72.9	59.0	45.0	31.1	-	-	75.6	8.7	69.2	55.7	42.2	28.6	-	-
	67	78.6	7.9	77.6	69.2	60.9	46.7	32.5	-	73.3	8.7	73.3	66.0	58.6	44.5	30.5	-
	62	79.3	8.0	77.9	77.3	76.7	62.3	47.9	33.5	75.1	8.7	72.8	72.8	72.8	60.5	45.8	31.2
	57	80.1	8.0	78.2	78.2	78.2	77.9	63.3	48.6	76.9	8.7	72.2	72.2	72.2	72.2	61.2	46.0
3375	72	83.9	8.0	78.1	62.6	47.2	31.8	-	-	78.1	8.7	73.7	58.8	43.9	29.0	-	-
	67	82.5	8.0	80.8	73.0	65.2	49.5	33.7	-	77.2	8.7	76.0	69.4	62.8	47.2	31.6	-
	62	82.9	8.0	80.9	80.9	80.9	67.2	51.1	35.0	78.2	8.7	75.7	75.7	75.7	65.4	49.0	32.7
	57	83.3	8.0	81.0	81.0	81.0	81.0	68.4	52.0	79.3	8.8	75.4	75.4	75.4	75.4	66.5	49.4
3750	72	86.3	8.0	83.2	66.3	49.3	32.4	-	-	80.6	8.7	78.3	62.0	45.7	29.4	-	-
	67	86.4	8.0	84.0	76.8	69.6	52.2	34.8	-	81.0	8.7	78.5	72.8	67.0	49.9	32.7	-
	62	86.5	8.0	83.9	83.9	83.9	72.0	54.2	36.4	81.3	8.8	78.6	78.6	78.6	70.3	52.2	34.2
	57	86.5	8.0	83.8	83.8	83.8	83.8	73.6	55.3	81.6	8.8	78.6	78.6	78.6	78.6	71.8	52.9

1 These capacities are gross ratings. For net capacity, deduct supply air blower motor, MBh. Example: Refer to the appropriate Blower Performance Table for the BHP of the supply air blower motor, MBh = 3.415 x kW and kW = BHP x 0.746 ÷ nameplate rated motor efficiency.

2 These ratings include the condenser fan motors and the compressor motors but not the supply air blower motor.

PC120/NL120

Air on Evaporator Coil		Temperature of Air on Condenser Coil															
		Total Capacity[1] (MBh)	Total Input (kW)[2]	Sensible Capacity (MBh) Return Dry Bulb (°F)						Total Capacity[1] (MBh)	Total Input (kW)[2]	Sensible Capacity (MBh) Return Dry Bulb (°F)					
CFM	WB (°F)			90	85	80	75	70	65			90	85	80	75	70	65
		75°F								**85°F**							
3000	77	149.8	7.2	75.8	63.4	51.0	-	-	-	143.7	8.3	71.6	59.1	46.7	-	-	-
	72	139.6	7.1	92.7	80.3	67.9	55.5	-	-	133.3	8.1	89.0	76.6	64.2	51.8	-	-
	67	129.4	6.9	109.6	97.2	84.8	72.4	60.0	-	122.8	8.0	106.5	94.1	81.7	69.3	56.9	-
	62	118.8	6.8	118.8	115.6	103.2	90.8	78.4	66.0	113.6	7.8	113.6	111.7	99.2	86.8	74.4	62.0
	57	119.0	6.7	119.0	119.9	108.9	96.5	84.1	71.7	113.9	7.9	113.9	113.9	102.1	89.7	77.3	64.8
3500	77	153.8	7.3	81.4	68.2	54.3	-	-	-	147.4	8.3	78.3	64.2	50.2	-	-	-
	72	143.4	7.1	100.2	86.2	72.2	58.3	-	-	136.7	8.2	97.1	83.0	69.0	54.9	-	-
	67	132.9	7.0	118.9	104.2	90.2	76.2	62.3	-	126.0	8.0	115.8	101.8	87.8	73.7	59.7	-
	62	122.0	6.8	122.0	120.4	109.8	96.5	81.9	67.9	116.5	7.9	116.5	115.5	106.6	92.5	78.5	64.5
	57	122.2	6.8	122.2	122.7	115.9	102.9	88.0	74.0	116.8	7.9	116.8	116.8	109.7	95.6	81.6	67.5
4000	77	157.9	7.3	87.0	73.1	57.6	-	-	-	151.1	8.4	85.0	69.3	53.6	-	-	-
	72	147.2	7.2	107.6	92.1	76.6	61.1	-	-	140.2	8.2	105.1	89.4	73.7	58.1	-	-
	67	136.4	7.0	128.3	111.2	95.6	80.1	64.6	-	129.2	8.1	125.1	109.5	93.8	78.1	62.5	-
	62	125.3	6.8	125.3	125.3	116.4	102.2	85.4	69.9	119.4	7.9	119.4	119.4	114.0	98.3	82.6	66.9
	57	125.5	6.8	125.5	125.5	123.0	109.2	91.9	76.4	119.8	7.9	119.8	119.8	117.2	101.6	85.9	70.2
4500	72	151.1	7.1	116.3	99.4	82.5	65.6	-	-	143.8	8.2	113.5	96.3	79.2	62.0	-	-
	67	140.0	7.0	136.0	119.9	103.0	86.1	69.2	-	132.6	8.1	130.5	117.9	100.7	83.6	66.4	-
	62	128.6	6.8	128.6	128.6	124.1	107.9	90.4	73.5	122.5	7.9	122.5	122.5	119.8	102.6	85.5	68.3
	57	128.8	6.8	128.8	128.8	127.5	111.5	93.7	76.8	122.9	7.9	122.9	122.9	121.6	104.5	87.3	70.1
5000	72	155.0	7.1	125.0	106.7	88.5	70.2	-	-	147.4	8.2	121.9	103.2	84.6	66.0	-	-
	67	143.6	6.9	143.6	128.7	110.4	92.2	73.9	-	135.9	8.1	135.9	126.3	107.6	89.0	70.4	-
	62	131.9	6.8	131.9	131.9	131.9	113.6	95.3	77.0	125.6	7.9	125.6	125.6	125.6	107.0	88.4	69.7
	57	132.1	6.7	132.1	132.1	132.1	113.8	95.5	77.3	126.0	7.9	126.0	126.0	126.0	107.3	88.7	70.1
		95°F								**105°F**							
3000	77	137.6	9.3	67.3	54.9	42.5	-	-	-	128.4	10.6	65.3	52.7	40.2	-	-	-
	72	126.9	9.2	85.4	73.0	60.5	48.1	-	-	118.5	10.5	82.9	70.4	57.8	45.2	-	-
	67	116.3	9.0	103.5	91.0	78.6	66.2	53.7	-	108.6	10.4	100.5	88.0	75.4	62.9	50.3	-
	62	108.3	8.9	108.3	107.7	95.3	82.8	70.4	58.0	101.6	10.3	101.6	101.3	90.8	78.3	65.7	53.2
	57	108.7	9.0	108.7	107.8	95.3	82.9	70.5	58.0	103.1	10.3	103.1	102.6	90.6	78.0	65.5	52.9
3500	77	140.9	9.4	75.2	60.2	46.1	-	-	-	131.8	10.7	74.6	57.7	43.5	-	-	-
	72	130.0	9.2	93.9	79.8	65.7	51.6	-	-	121.6	10.5	91.0	76.8	62.6	48.4	-	-
	67	119.1	9.1	112.7	99.4	85.3	71.2	57.0	-	111.5	10.4	107.4	95.9	81.7	67.5	53.3	-
	62	111.0	9.0	111.0	110.7	103.4	88.6	75.1	61.0	104.4	10.3	104.4	104.2	98.4	83.9	70.0	55.8
	57	111.4	9.0	111.4	110.9	103.4	88.4	75.2	61.0	105.9	10.3	105.9	105.6	98.1	83.5	69.7	55.5
4000	77	144.3	9.4	83.0	65.5	49.7	-	-	-	135.2	10.7	84.0	62.7	46.9	-	-	-
	72	133.1	9.3	102.5	86.7	70.8	55.0	-	-	124.8	10.6	99.2	83.3	67.4	51.6	-	-
	67	122.0	9.1	122.0	107.8	92.0	76.2	60.3	-	114.4	10.4	114.4	103.9	88.0	72.1	56.3	-
	62	113.6	9.0	113.6	113.6	111.5	94.4	79.8	64.0	107.1	10.3	107.1	107.1	106.0	89.5	74.3	58.4
	57	114.1	9.1	114.1	114.1	111.5	93.9	79.9	64.1	108.6	10.3	108.6	108.6	105.7	88.9	74.0	58.1
4500	72	136.5	9.3	110.6	93.2	75.8	58.4	-	-	127.9	10.6	107.7	90.2	72.7	55.1	-	-
	67	125.1	9.1	125.1	115.8	98.4	81.0	63.6	-	117.2	10.5	117.2	110.9	94.8	77.3	59.7	-
	62	116.5	9.0	116.5	116.5	115.4	97.4	80.6	63.2	109.8	10.3	109.8	109.8	109.2	91.3	74.1	56.6
	57	116.9	9.1	116.9	116.9	115.7	97.4	80.9	63.5	111.4	10.4	111.4	111.4	109.9	91.9	74.8	57.2
5000	72	139.9	9.3	118.7	99.7	80.7	61.8	-	-	131.1	10.6	116.3	97.1	77.9	58.6	-	-
	67	128.2	9.2	128.2	123.8	104.9	85.9	66.9	-	120.1	10.5	120.1	117.9	101.6	82.4	63.1	-
	62	119.4	9.1	119.4	119.4	119.4	100.4	81.4	62.4	112.4	10.4	112.4	112.4	112.4	93.2	74.0	54.7
	57	119.8	9.2	119.8	119.8	119.8	100.8	81.8	62.9	114.1	10.4	114.1	114.1	114.1	94.8	75.6	56.4

PC120/NL120 (Continued)

Air on Evaporator Coil		Temperature of Air on Condenser Coil															
		Total Capacity[1] (MBh)	Total Input (kW)[2]	Sensible Capacity (MBh) Return Dry Bulb (°F)						Total Capacity[1] (MBh)	Total Input (kW)[2]	Sensible Capacity (MBh) Return Dry Bulb (°F)					
CFM	WB (°F)			90	85	80	75	70	65			90	85	80	75	70	65
		115°F								**125°F**							
3000	77	119.2	12.0	63.3	50.6	37.9	-	-	-	110.1	13.3	61.2	48.4	35.6	-	-	-
	72	110.0	11.9	80.4	67.7	55.1	42.4	-	-	101.6	13.2	77.9	65.1	52.3	39.5	-	-
	67	100.9	11.7	97.6	84.9	72.2	59.5	46.9	-	93.2	13.1	93.2	81.8	69.0	56.2	43.4	-
	62	95.0	11.6	95.0	95.0	86.4	73.7	61.0	48.4	88.3	12.9	88.3	88.3	82.0	69.2	56.4	43.6
	57	97.5	11.6	97.5	97.5	85.8	73.1	60.4	47.8	91.9	12.9	91.9	91.9	81.0	68.2	55.4	42.6
3500	77	122.7	12.0	74.1	55.3	41.0	-	-	-	113.6	13.3	73.6	52.8	38.5	-	-	-
	72	113.3	11.9	88.1	73.8	59.6	45.3	-	-	104.9	13.2	85.2	70.9	56.5	42.1	-	-
	67	103.8	11.7	102.2	92.4	78.1	63.8	49.5	-	96.1	13.1	96.1	88.9	74.5	60.2	45.8	-
	62	97.7	11.6	97.7	97.7	93.4	79.2	64.9	50.6	91.1	12.9	91.1	91.1	88.5	74.4	59.7	45.4
	57	100.4	11.6	100.4	100.4	92.8	78.5	64.2	49.9	94.9	12.9	94.9	94.9	87.5	73.6	58.8	44.4
4000	77	126.2	12.0	84.9	60.0	44.1	-	-	-	117.1	13.3	85.9	57.2	41.3	-	-	-
	72	116.5	11.9	95.8	79.9	64.0	48.2	-	-	108.1	13.2	92.5	76.6	60.7	44.7	-	-
	67	106.7	11.7	106.7	99.9	84.0	68.1	52.2	-	99.1	13.1	99.1	95.9	80.0	64.1	48.2	-
	62	100.5	11.6	100.5	100.5	100.5	84.6	68.7	52.8	93.9	12.9	93.9	93.9	93.9	79.7	63.1	47.2
	57	103.2	11.6	103.2	103.2	99.8	83.9	68.0	52.1	97.8	12.9	97.8	97.8	93.9	78.9	62.1	46.2
4500	72	119.3	11.9	104.9	87.2	69.5	51.8	-	-	110.7	13.2	102.0	84.2	66.4	48.6	-	-
	67	109.4	11.8	109.4	106.0	91.2	73.5	55.8	-	101.5	13.1	101.5	101.0	87.6	69.7	51.9	-
	62	103.0	11.6	103.0	103.0	103.0	85.3	67.6	49.9	96.2	12.9	96.2	96.2	96.2	79.2	61.1	43.3
	57	105.8	11.6	105.8	105.8	104.1	86.4	68.7	51.0	100.2	12.9	100.2	100.2	98.2	80.9	62.6	44.8
5000	72	122.2	11.9	113.9	94.4	75.0	55.5	-	-	113.4	13.2	111.5	91.8	72.1	52.4	-	-
	67	112.0	11.8	112.0	112.0	98.4	78.9	59.4	-	103.9	13.0	103.9	103.9	95.1	75.4	55.7	-
	62	105.5	11.6	105.5	105.5	105.5	86.0	66.5	47.1	98.5	12.9	98.5	98.5	98.5	78.8	59.1	39.4
	57	108.3	11.6	108.3	108.3	108.3	88.8	69.4	49.9	102.5	12.9	102.5	102.5	102.5	82.9	63.2	43.5

1 These capacities are gross ratings. For net capacity, deduct supply air blower motor, MBh. Example: Refer to the appropriate Blower Performance Table for the BHP of the supply air blower motor, MBh = 3.415 x kW and kW = BHP x 0.746 ÷ nameplate rated motor efficiency.

2 These ratings include the condenser fan motors and the compressor motors but not the supply air blower motor.

PC180/NC180/NL180

Air on Evaporator Coil		Temperature of Air on Condenser Coil															
		Total Capacity[1] (MBh)	Total Input (kW)[2]	Sensible Capacity (MBh) Return Dry Bulb (°F)						Total Capacity[1] (MBh)	Total Input (kW)[2]	Sensible Capacity (MBh) Return Dry Bulb (°F)					
CFM	WB (°F)			90	85	80	75	70	65			90	85	80	75	70	65
		75°F								**85°F**							
4500	77	223.0	12.5	104.1	85.2	66.4	-	-	-	216.7	13.8	104.7	85.9	67.0	-	-	-
	72	209.3	12.3	134.7	115.8	97.0	78.1	-	-	200.9	13.6	133.0	114.1	95.2	76.3	-	-
	67	195.7	12.1	165.2	146.4	127.6	108.7	89.9	-	185.0	13.4	161.2	142.3	123.4	104.5	85.7	-
	62	176.7	11.8	176.7	176.7	152.0	133.2	114.3	95.5	169.4	13.0	169.4	169.4	151.2	132.4	113.5	94.6
	57	179.6	11.8	179.6	179.6	159.1	140.3	121.4	102.6	173.1	13.1	173.1	173.1	154.4	135.5	116.7	97.8
5250	77	229.0	12.6	113.8	93.3	71.8	-	-	-	221.4	13.9	114.8	93.3	71.7	-	-	-
	72	215.0	12.4	147.9	126.3	104.8	83.3	-	-	205.2	13.6	145.0	123.5	101.9	80.3	-	-
	67	200.9	12.2	181.9	159.4	137.8	116.3	94.8	-	189.1	13.4	175.2	153.7	132.1	110.5	88.9	-
	62	181.4	11.8	181.4	181.4	164.3	143.6	121.3	99.8	173.0	13.1	173.0	173.0	161.9	140.3	118.7	97.1
	57	184.5	11.9	184.5	184.5	171.9	151.4	128.9	107.4	176.9	13.1	176.9	176.9	165.3	143.7	122.1	100.6
6000	77	235.0	12.6	123.5	101.4	77.2	-	-	-	226.1	13.9	124.9	100.6	76.4	-	-	-
	72	220.6	12.4	161.0	136.9	112.7	88.5	-	-	209.6	13.7	157.1	132.8	108.6	84.3	-	-
	67	206.2	12.2	198.5	172.3	148.1	123.9	99.8	-	193.1	13.4	189.3	165.0	140.8	116.5	92.2	-
	62	186.2	11.9	186.2	186.2	176.7	154.1	128.3	104.1	176.7	13.1	176.7	176.7	172.5	148.2	124.0	99.7
	57	189.3	11.9	189.3	189.3	184.8	162.6	136.4	112.2	180.6	13.2	180.6	180.6	176.1	151.8	127.6	103.3
6750	72	223.2	12.5	170.5	144.3	118.1	91.9	-	-	213.0	13.7	168.5	142.1	115.7	89.3	-	-
	67	208.6	12.3	204.8	181.5	155.3	129.1	102.9	-	196.2	13.5	194.3	176.4	150.0	123.6	97.3	-
	62	188.4	11.9	188.4	188.4	183.6	158.3	131.3	105.1	179.6	13.2	179.6	179.6	177.5	151.1	124.7	98.3
	57	191.6	12.0	191.6	191.6	189.3	164.1	136.9	110.7	183.6	13.2	183.6	183.6	181.3	154.9	128.5	102.2
7500	72	225.9	12.6	179.9	151.7	123.5	95.3	-	-	216.4	13.8	179.9	151.4	122.9	94.4	-	-
	67	211.1	12.4	211.1	190.7	162.5	134.3	106.1	-	199.4	13.5	199.4	187.8	159.3	130.8	102.3	-
	62	190.6	12.0	190.6	190.6	190.6	162.4	134.2	106.0	182.5	13.2	182.5	182.5	182.5	154.0	125.5	97.0
	57	193.8	12.1	193.8	193.8	193.8	165.6	137.4	109.2	186.5	13.3	186.5	186.5	186.5	158.0	129.5	101.0
		95°F								**105°F**							
4500	77	210.5	15.1	105.4	86.5	67.6	-	-	-	192.8	16.7	98.9	80.0	61.1	-	-	-
	72	192.4	14.9	131.3	112.4	93.4	74.5	-	-	177.2	16.5	125.6	106.7	87.8	68.9	-	-
	67	174.4	14.6	157.1	138.2	119.3	100.4	81.4	-	161.6	16.3	152.4	133.5	114.6	95.7	76.8	-
	62	162.0	14.3	162.0	162.0	150.5	131.6	112.6	93.7	150.1	16.0	150.1	150.1	142.4	123.5	104.6	85.7
	57	166.6	14.4	166.6	166.6	149.8	130.8	111.9	93.0	155.1	16.1	155.1	155.1	137.9	119.0	100.1	81.2
5250	77	213.8	15.2	115.9	93.2	71.6	-	-	-	196.5	16.7	114.1	86.9	65.3	-	-	-
	72	195.5	14.9	142.2	120.6	99.0	77.3	-	-	180.6	16.5	137.1	115.5	93.8	72.2	-	-
	67	177.2	14.6	168.6	148.0	126.3	104.7	83.1	-	164.7	16.3	160.1	144.1	122.4	100.8	79.2	-
	62	164.7	14.4	164.7	164.7	159.4	136.9	116.1	94.5	153.0	16.1	153.0	153.0	152.2	130.1	108.9	87.3
	57	169.2	14.4	169.2	169.2	158.6	136.0	115.3	93.7	158.1	16.1	158.1	158.1	147.3	125.2	104.1	82.4
6000	77	217.2	15.2	126.3	99.9	75.6	-	-	-	200.2	16.8	129.3	93.8	69.4	-	-	-
	72	198.6	14.9	153.1	128.8	104.5	80.1	-	-	184.1	16.5	148.6	124.2	99.9	75.5	-	-
	67	180.0	14.6	180.0	157.7	133.4	109.0	84.7	-	167.9	16.3	167.9	154.7	130.3	106.0	81.6	-
	62	167.3	14.4	167.3	167.3	168.3	142.3	119.6	95.3	155.9	16.1	155.9	155.9	162.0	136.8	113.2	88.9
	57	171.9	14.4	171.9	171.9	167.5	141.1	118.8	94.5	161.1	16.1	161.1	161.1	156.7	131.4	108.0	83.7
6750	72	202.8	15.0	166.5	139.9	113.4	86.8	-	-	187.4	16.6	160.8	134.3	107.7	81.1	-	-
	67	183.8	14.7	183.8	171.3	144.7	118.2	91.6	-	170.9	16.4	170.9	163.6	140.5	113.9	87.3	-
	62	170.8	14.4	170.8	170.8	171.3	143.9	118.2	91.6	158.7	16.1	158.7	158.7	161.7	134.7	108.6	82.0
	57	175.6	14.5	175.6	175.6	173.3	145.8	120.2	93.6	164.0	16.2	164.0	164.0	161.8	134.7	108.6	82.1
7500	72	207.0	15.0	179.8	151.0	122.2	93.5	-	-	190.7	16.6	173.1	144.3	115.5	86.7	-	-
	67	187.6	14.7	187.6	184.9	156.1	127.3	98.5	-	173.9	16.4	173.9	172.5	150.7	121.9	93.1	-
	62	174.3	14.4	174.3	174.3	174.3	145.5	116.7	87.9	161.5	16.2	161.5	161.5	161.5	132.7	103.9	75.1
	57	179.2	14.5	179.2	179.2	179.2	150.4	121.6	92.8	166.8	16.2	166.8	166.8	166.8	138.1	109.3	80.5

PC180/NC180/NL180 (Continued)

Air on Evaporator Coil		Temperature of Air on Condenser Coil															
		Total Capacity[1] (MBh)	Total Input (kW)[2]	Sensible Capacity (MBh) Return Dry Bulb (°F)						Total Capacity[1] (MBh)	Total Input (kW)[2]	Sensible Capacity (MBh) Return Dry Bulb (°F)					
CFM	WB (°F)			90	85	80	75	70	65			90	85	80	75	70	65
		115°F								**125°F**							
4500	77	175.1	18.3	92.4	73.5	54.6	-	-	-	157.4	19.9	85.8	67.0	48.1	-	-	-
	72	162.0	18.1	120.0	101.1	82.2	63.3	-	-	146.7	19.8	114.3	95.5	76.6	57.8	-	-
	67	148.8	18.0	147.6	128.7	109.8	91.0	72.1	-	136.1	19.6	136.1	124.0	105.1	86.3	67.4	-
	62	138.1	17.8	138.1	138.1	134.4	115.5	96.6	77.7	126.2	19.5	126.2	126.2	126.2	107.5	88.6	69.7
	57	143.6	17.8	143.6	143.6	126.1	107.2	88.3	69.4	132.1	19.6	132.1	132.1	114.2	95.4	76.5	57.6
5250	77	179.2	18.3	112.3	80.6	58.9	-	-	-	161.8	19.9	110.6	74.3	52.6	-	-	-
	72	165.7	18.1	132.0	110.4	88.7	67.1	-	-	150.8	19.8	126.9	105.3	83.6	62.0	-	-
	67	152.3	18.0	151.7	140.2	118.6	96.9	75.3	-	139.9	19.6	139.9	136.3	114.7	93.0	71.4	-
	62	141.3	17.8	141.3	141.3	145.0	123.4	101.7	80.1	129.7	19.5	129.7	129.7	129.7	116.6	94.6	72.9
	57	146.9	17.8	146.9	146.9	136.1	114.4	92.8	71.1	135.7	19.6	135.7	135.7	124.8	103.6	81.5	59.9
6000	77	183.2	18.3	132.3	87.6	63.3	-	-	-	166.2	19.9	135.3	81.5	57.1	-	-	-
	72	169.5	18.1	144.0	119.6	95.3	70.9	-	-	154.9	19.8	139.5	115.1	90.6	66.2	-	-
	67	155.8	18.0	155.8	151.6	127.3	102.9	78.5	-	143.6	19.6	143.6	143.6	124.2	99.8	75.4	-
	62	144.5	17.8	144.5	144.5	155.7	131.3	106.9	82.5	133.2	19.5	133.2	133.2	133.2	125.8	100.5	76.1
	57	150.2	17.9	150.2	150.2	146.0	121.6	97.3	72.9	139.4	19.6	139.4	139.4	135.3	111.9	86.5	62.1
6750	72	171.9	18.2	155.2	128.6	102.0	75.4	-	-	156.4	19.8	149.5	122.9	96.3	69.7	-	-
	67	158.0	18.0	158.0	155.9	136.3	109.7	83.1	-	145.1	19.7	145.1	145.1	132.0	105.4	78.8	-
	62	146.6	17.8	146.6	146.6	152.1	125.6	99.0	72.4	134.5	19.5	134.5	134.5	134.5	116.4	89.4	62.7
	57	152.4	17.9	152.4	152.4	150.3	123.7	97.1	70.5	140.8	19.6	140.8	140.8	138.8	112.7	85.5	58.9
7500	72	174.3	18.2	166.3	137.5	108.8	80.0	-	-	158.0	19.9	158.0	130.8	102.0	73.2	-	-
	67	160.2	18.1	160.2	160.2	145.3	116.5	87.7	-	146.5	19.8	146.5	146.5	139.9	111.1	82.3	-
	62	148.6	17.9	148.6	148.6	148.6	119.8	91.0	62.3	135.8	19.6	135.8	135.8	135.8	107.0	78.2	49.4
	57	154.5	18.0	154.5	154.5	154.5	125.7	96.9	68.1	142.2	19.7	142.2	142.2	142.2	113.4	84.6	55.8

1 These capacities are gross ratings. For net capacity, deduct supply air blower motor, MBh. Example: Refer to the appropriate Blower Performance Table for the BHP of the supply air blower motor, MBh = 3.415 x kW and kW = BHP x 0.746 ÷ nameplate rated motor efficiency.

2 These ratings include the condenser fan motors and the compressor motors but not the supply air blower motor

PD180/ND180/NM180

Air on Evaporator Coil		Temperature of Air on Condenser Coil															
		Total Capacity[1] (MBh)	Total Input (kW)[2]	Sensible Capacity (MBh) Return Dry Bulb (°F)						Total Capacity[1] (MBh)	Total Input (kW)[2]	Sensible Capacity (MBh) Return Dry Bulb (°F)					
CFM	WB (°F)			90	85	80	75	70	65			90	85	80	75	70	65
		75°F								**85°F**							
4500	77	231.4	12.4	111.6	93.0	74.5	-	-	-	219.9	13.7	106.4	87.9	69.5	-	-	-
	72	215.6	12.0	142.9	124.4	105.8	87.2	-	-	204.0	13.4	138.2	119.7	101.2	82.8	-	-
	67	199.7	11.7	174.3	155.7	137.2	118.6	100.0	-	188.1	13.1	169.9	151.4	133.0	114.5	96.0	-
	62	183.7	11.4	183.7	183.7	170.7	152.1	133.6	115.0	174.3	12.8	174.3	174.3	163.8	145.3	126.9	108.4
	57	184.6	11.4	184.6	184.6	173.2	154.6	136.1	117.5	175.3	12.8	175.3	175.3	164.8	146.3	127.8	109.4
5250	77	233.6	12.4	117.3	98.2	76.9	-	-	-	222.0	13.7	114.1	92.9	71.7	-	-	-
	72	217.6	12.1	151.9	130.6	109.3	88.0	-	-	206.0	13.4	146.9	125.7	104.5	83.3	-	-
	67	201.6	11.7	186.5	163.0	141.7	120.4	99.1	-	189.9	13.1	179.7	158.5	137.2	116.0	94.8	-
	62	185.5	11.4	185.5	185.5	176.3	155.6	133.7	112.4	176.0	12.8	176.0	176.0	169.1	147.9	126.6	105.4
	57	186.3	11.4	186.3	186.3	178.9	158.5	136.3	115.0	177.0	12.8	177.0	177.0	170.1	148.8	127.6	106.4
6000	77	235.8	12.4	123.1	103.4	79.4	-	-	-	224.2	13.7	121.8	97.9	73.9	-	-	-
	72	219.7	12.1	160.9	136.9	112.8	88.7	-	-	208.0	13.4	155.6	131.7	107.7	83.8	-	-
	67	203.5	11.7	198.8	170.3	146.2	122.2	98.1	-	191.8	13.1	189.4	165.5	141.5	117.6	93.6	-
	62	187.2	11.4	187.2	187.2	182.0	159.2	133.8	109.8	177.7	12.9	177.7	177.7	174.3	150.4	126.4	102.5
	57	188.0	11.4	188.0	188.0	184.6	162.4	136.5	112.4	178.7	12.9	178.7	178.7	175.4	151.4	127.5	103.5
6750	72	222.5	12.1	171.1	144.6	118.1	91.7	-	-	210.6	13.5	165.7	139.4	113.2	86.9	-	-
	67	206.2	11.8	203.8	179.6	153.2	126.7	100.2	-	194.2	13.2	193.0	174.9	148.6	122.4	96.1	-
	62	189.7	11.5	189.7	189.7	187.0	161.2	134.1	107.6	180.0	12.9	180.0	180.0	178.3	152.0	125.7	99.5
	57	190.5	11.5	190.5	190.5	188.8	163.3	135.9	109.4	181.0	12.9	181.0	181.0	179.3	153.1	126.8	100.5
7500	72	225.4	12.2	181.3	152.4	123.5	94.6	-	-	213.3	13.6	175.8	147.2	118.6	90.0	-	-
	67	208.9	11.8	208.9	189.0	160.1	131.2	102.3	-	196.7	13.2	196.7	184.4	155.8	127.2	98.6	-
	62	192.1	11.5	192.1	192.1	192.1	163.2	134.3	105.5	182.2	13.0	182.2	182.2	182.2	153.6	125.0	96.4
	57	193.0	11.5	193.0	193.0	193.0	164.1	135.2	106.3	183.3	13.0	183.3	183.3	183.3	154.7	126.1	97.5
		95°F								**105°F**							
4500	77	208.3	15.1	101.3	82.9	64.5	-	-	-	192.0	17.0	96.4	77.9	59.4	-	-	-
	72	192.4	14.8	133.4	115.0	96.6	78.3	-	-	177.3	16.7	128.6	110.2	91.7	73.2	-	-
	67	176.4	14.5	165.5	147.2	128.8	110.4	92.0	-	162.5	16.4	157.1	142.5	124.0	105.5	87.0	-
	62	164.9	14.3	164.9	164.9	156.9	138.5	120.2	101.8	153.2	16.2	153.2	153.2	149.2	130.7	112.3	93.8
	57	166.1	14.3	166.1	166.1	156.3	138.0	119.6	101.2	155.2	16.2	155.2	155.2	146.0	127.5	109.0	90.6
5250	77	210.5	15.1	110.9	87.6	66.5	-	-	-	193.9	17.0	110.4	82.4	61.2	-	-	-
	72	194.3	14.8	141.9	120.8	99.7	78.5	-	-	179.0	16.7	136.8	115.7	94.5	73.4	-	-
	67	178.2	14.5	172.8	153.9	132.8	111.7	90.6	-	164.1	16.4	161.4	149.0	127.8	106.6	85.5	-
	62	166.5	14.3	166.5	166.5	161.8	140.1	119.6	98.5	154.7	16.2	154.7	154.7	154.2	132.7	111.9	90.7
	57	167.8	14.3	167.8	167.8	161.2	139.2	119.0	97.9	156.8	16.2	156.8	156.8	150.5	128.9	108.2	87.0
6000	77	212.6	15.1	120.6	92.3	68.5	-	-	-	195.8	17.0	124.4	86.9	63.1	-	-	-
	72	196.3	14.8	150.3	126.5	102.7	78.8	-	-	180.8	16.7	145.0	121.2	97.3	73.5	-	-
	67	180.0	14.5	180.0	160.6	136.8	113.0	89.2	-	165.7	16.4	165.7	155.5	131.6	107.8	83.9	-
	62	168.2	14.3	168.2	168.2	166.7	141.6	119.0	95.2	156.2	16.2	156.2	156.2	159.2	134.7	111.5	87.6
	57	169.5	14.3	169.5	169.5	166.1	140.4	118.4	94.6	158.3	16.2	158.3	158.3	155.0	130.2	107.3	83.4
6750	72	198.7	14.9	160.3	134.2	108.2	82.1	-	-	183.0	16.8	155.6	129.3	103.0	76.7	-	-
	67	182.2	14.6	182.2	170.2	144.1	118.0	92.0	-	167.8	16.5	167.8	161.5	139.3	113.0	86.7	-
	62	170.3	14.3	170.3	170.3	169.5	142.8	117.4	91.3	158.2	16.2	158.2	158.2	159.7	133.0	107.1	80.8
	57	171.6	14.4	171.6	171.6	169.9	142.9	117.7	91.6	160.3	16.3	160.3	160.3	158.6	131.9	106.0	79.7
7500	72	201.2	14.9	170.3	142.0	113.6	85.3	-	-	185.3	16.8	166.3	137.5	108.8	80.0	-	-
	67	184.5	14.6	184.5	179.8	151.4	123.1	94.8	-	169.9	16.5	169.9	167.5	147.1	118.3	89.6	-
	62	172.4	14.4	172.4	172.4	172.4	144.1	115.7	87.4	160.1	16.3	160.1	160.1	160.1	131.4	102.6	73.9
	57	173.7	14.5	173.7	173.7	173.7	145.3	117.0	88.7	162.3	16.4	162.3	162.3	162.3	133.5	104.8	76.0

PD180/ND180/NM180 (Continued)

Air on Evaporator Coil		Temperature of Air on Condenser Coil															
		Total Capacity[1] (MBh)	Total Input (kW)[2]	Sensible Capacity (MBh) Return Dry Bulb (°F)						Total Capacity[1] (MBh)	Total Input (kW)[2]	Sensible Capacity (MBh) Return Dry Bulb (°F)					
CFM	WB (°F)			90	85	80	75	70	65			90	85	80	75	70	65
		115°F								**125°F**							
4500	77	175.7	18.9	91.5	72.9	54.3	-	-	-	159.4	20.8	86.6	67.9	49.2	-	-	-
	72	162.2	18.6	123.9	105.3	86.8	68.2	-	-	147.1	20.5	119.1	100.5	81.8	63.1	-	-
	67	148.6	18.2	148.6	137.8	119.2	100.6	82.0	-	134.7	20.1	134.7	133.1	114.4	95.7	77.1	-
	62	141.5	18.1	141.5	141.5	141.5	123.0	104.4	85.8	129.9	20.0	129.9	129.9	129.9	115.2	96.5	77.8
	57	144.4	18.1	144.4	144.4	135.6	117.1	98.5	79.9	133.6	20.1	133.6	133.6	125.3	106.6	88.0	69.3
5250	77	177.4	18.9	109.8	77.2	56.0	-	-	-	160.8	20.9	109.2	72.0	50.7	-	-	-
	72	163.7	18.6	131.8	110.6	89.4	68.2	-	-	148.4	20.5	126.8	105.5	84.3	63.0	-	-
	67	150.0	18.3	150.0	144.0	122.8	101.6	80.4	-	135.9	20.1	135.9	135.9	117.8	96.5	75.3	-
	62	142.9	18.1	142.9	142.9	146.6	125.4	104.2	82.9	131.0	20.0	131.0	131.0	131.0	118.0	96.4	75.2
	57	145.8	18.1	145.8	145.8	139.8	118.5	97.3	76.1	134.8	20.1	134.8	134.8	129.1	108.2	86.5	65.2
6000	77	179.0	18.9	128.1	81.5	57.6	-	-	-	162.3	20.9	131.9	76.1	52.2	-	-	-
	72	165.2	18.6	139.8	115.9	92.0	68.2	-	-	149.7	20.5	134.5	110.6	86.7	62.8	-	-
	67	151.4	18.3	151.4	150.3	126.4	102.6	78.7	-	137.1	20.1	137.1	137.1	121.3	97.4	73.5	-
	62	144.2	18.1	144.2	144.2	151.7	127.8	103.9	80.1	132.2	20.0	132.2	132.2	132.2	120.9	96.4	72.5
	57	147.1	18.2	147.1	147.1	143.9	120.0	96.1	72.3	136.0	20.1	136.0	136.0	132.8	109.8	85.0	61.1
6750	72	167.3	18.7	151.0	124.5	97.9	71.4	-	-	151.6	20.6	146.3	119.6	92.8	66.1	-	-
	67	153.3	18.3	153.3	152.8	134.6	108.0	81.5	-	138.9	20.2	138.9	138.9	129.8	103.0	76.3	-
	62	146.0	18.1	146.0	146.0	149.8	123.2	96.7	70.2	133.9	20.0	133.9	133.9	133.9	113.5	86.4	59.6
	57	149.0	18.2	149.0	149.0	147.4	120.9	94.3	67.8	137.7	20.1	137.7	137.7	136.1	109.9	82.6	55.9
7500	72	169.4	18.7	162.2	133.0	103.9	74.7	-	-	153.5	20.6	153.5	128.6	99.0	69.4	-	-
	67	155.3	18.4	155.3	155.3	142.7	113.5	84.3	-	140.7	20.3	140.7	140.7	138.3	108.7	79.1	-
	62	147.9	18.2	147.9	147.9	147.9	118.7	89.5	60.3	135.6	20.1	135.6	135.6	135.6	106.0	76.4	46.8
	57	150.9	18.3	150.9	150.9	150.9	121.7	92.5	63.3	139.5	20.2	139.5	139.5	139.5	109.9	80.3	50.6

1 These capacities are gross ratings. For net capacity, deduct supply air blower motor, MBh. Example: Refer to the appropriate Blower Performance Table for the BHP of the supply air blower motor, MBh = 3.415 x kW and kW = BHP x 0.746 ÷ nameplate rated motor efficiency.

2 These ratings include the condenser fan motors and the compressor motors but not the supply air blower motor.

PD240/NM240

Air on Evaporator Coil		Temperature of Air on Condenser Coil															
		Total Capacity[1] (MBh)	Total Input (kW)[2]	Sensible Capacity (MBh) Return Dry Bulb (°F)						Total Capacity[1] (MBh)	Total Input (kW)[2]	Sensible Capacity (MBh) Return Dry Bulb (°F)					
CFM	WB (°F)			90	85	80	75	70	65			90	85	80	75	70	65
		75°F								**85°F**							
6000	77	314.8	15.1	142.6	118.0	93.5	-	-	-	300.0	17.0	137.0	112.4	87.8	-	-	-
	72	285.9	14.8	177.4	152.9	128.3	103.8	-	-	271.7	16.7	171.9	147.4	122.8	98.3	-	-
	67	257.1	14.5	212.3	187.7	163.2	138.6	114.0	-	243.5	16.4	206.9	182.4	157.8	133.2	108.7	-
	62	239.1	14.2	239.1	225.1	200.5	175.9	151.4	126.8	227.5	16.1	227.5	219.3	194.7	170.2	145.6	121.1
	57	239.5	14.3	239.5	237.8	213.3	188.7	164.1	139.6	230.2	16.2	230.2	227.8	203.3	178.7	154.1	129.6
7000	77	321.1	15.2	154.7	127.4	100.0	-	-	-	305.7	17.1	148.9	121.5	94.1	-	-	-
	72	291.7	14.9	192.0	164.7	137.3	110.0	-	-	276.9	16.8	186.4	159.0	131.6	104.2	-	-
	67	262.3	14.6	229.3	201.9	174.6	147.2	119.9	-	248.1	16.5	223.9	196.5	169.1	141.7	114.4	-
	62	243.9	14.3	243.9	236.9	214.5	188.2	159.8	132.5	231.9	16.2	231.9	227.7	208.7	181.3	154.0	126.6
	57	244.3	14.5	244.3	243.5	228.2	203.0	173.5	146.1	234.5	16.3	234.5	233.4	217.9	190.5	163.1	135.7
8000	77	327.5	15.3	166.9	136.7	106.6	-	-	-	311.4	17.2	160.9	130.7	100.5	-	-	-
	72	297.5	15.0	206.6	176.5	146.3	116.2	-	-	282.1	16.9	200.9	170.7	140.5	110.2	-	-
	67	267.5	14.8	246.3	216.2	186.0	155.9	125.7	-	252.8	16.6	240.9	210.7	180.5	150.2	120.0	-
	62	248.8	14.4	248.8	248.8	228.6	200.4	168.3	138.1	236.2	16.2	236.2	236.2	222.7	192.5	162.3	132.1
	57	249.2	14.6	249.2	249.2	243.2	217.3	182.9	152.7	238.9	16.4	238.9	238.9	232.5	202.2	172.0	141.8
9000	72	303.3	15.2	219.3	184.7	150.2	115.7	-	-	287.2	17.1	212.0	178.0	144.0	110.1	-	-
	67	272.7	14.9	262.1	225.5	191.0	156.5	122.0	-	257.4	16.8	251.5	219.1	185.1	151.1	117.1	-
	62	253.6	14.6	253.6	253.6	234.7	201.2	165.6	131.1	240.5	16.4	240.5	240.5	228.4	194.4	160.4	126.5
	57	254.0	14.7	254.0	254.0	249.7	217.3	180.6	146.1	243.3	16.6	243.3	243.3	238.4	204.4	170.4	136.4
10000	72	309.0	15.4	231.9	193.0	154.1	115.2	-	-	292.4	17.3	223.1	185.4	147.6	109.9	-	-
	67	277.8	15.1	277.8	234.9	196.0	157.1	118.2	-	262.0	17.0	262.0	227.4	189.7	151.9	114.2	-
	62	258.4	14.7	258.4	258.4	240.8	201.9	163.0	124.1	244.8	16.6	244.8	244.8	234.1	196.4	158.6	120.9
	57	258.8	14.9	258.8	258.8	256.2	217.3	178.4	139.5	247.6	16.8	247.6	247.6	244.3	206.6	168.8	131.1
		95°F								**105°F**							
6000	77	285.2	18.9	131.3	106.8	82.2	-	-	-	264.8	21.2	126.0	101.4	76.8	-	-	-
	72	257.5	18.6	166.4	141.9	117.3	92.8	-	-	240.1	20.9	161.0	136.3	111.7	87.1	-	-
	67	229.9	18.2	201.5	177.0	152.4	127.9	103.3	-	215.3	20.5	195.9	171.3	146.7	122.1	97.5	-
	62	216.0	18.0	216.0	213.5	189.0	164.4	139.9	115.3	203.2	20.2	203.2	202.0	183.1	158.5	133.9	109.2
	57	220.8	18.1	220.8	217.8	193.2	168.7	144.1	119.6	209.8	20.4	209.8	206.5	181.9	157.3	132.6	108.0
7000	77	290.2	19.0	143.1	115.7	88.3	-	-	-	269.2	21.3	142.0	110.2	82.7	-	-	-
	72	262.1	18.6	180.8	153.4	126.0	98.5	-	-	244.1	20.9	175.3	147.8	120.3	92.8	-	-
	67	234.0	18.3	218.5	191.1	163.7	136.3	108.8	-	219.0	20.6	208.6	185.4	157.9	130.4	102.9	-
	62	219.8	18.0	219.8	218.6	202.9	174.5	148.1	120.7	206.6	20.3	206.6	206.0	197.1	169.1	142.1	114.6
	57	224.7	18.2	224.7	223.2	207.5	177.9	152.6	125.2	213.3	20.5	213.3	211.7	195.8	167.2	140.8	113.3
8000	77	295.2	19.0	154.9	124.6	94.3	-	-	-	273.7	21.4	158.1	119.0	88.5	-	-	-
	72	266.6	18.7	195.2	164.9	134.6	104.3	-	-	248.1	21.0	189.7	159.3	128.9	98.4	-	-
	67	238.0	18.4	235.5	205.2	174.9	144.6	114.3	-	222.6	20.7	221.3	199.6	169.2	138.8	108.3	-
	62	223.6	18.1	223.6	223.6	216.9	184.6	156.3	126.0	210.0	20.4	210.0	210.0	211.2	179.7	150.3	119.9
	57	228.6	18.3	228.6	228.6	221.8	187.2	161.2	130.9	216.9	20.6	216.9	216.9	209.7	177.2	148.9	118.5
9000	72	271.1	19.0	204.8	171.3	137.9	104.4	-	-	252.2	21.2	199.3	165.7	132.2	98.6	-	-
	67	242.1	18.6	240.8	212.6	179.1	145.7	112.3	-	226.2	20.9	225.6	207.1	173.6	140.0	106.4	-
	62	227.4	18.3	227.4	227.4	222.1	187.7	155.2	121.8	213.4	20.6	213.4	213.4	213.0	179.0	145.9	112.4
	57	232.5	18.5	232.5	232.5	227.1	191.5	160.2	126.8	220.4	20.8	220.4	220.4	215.2	180.5	148.0	114.5
10000	72	275.7	19.2	214.3	177.7	141.1	104.5	-	-	256.2	21.5	208.9	172.2	135.5	98.8	-	-
	67	246.1	18.8	246.1	219.9	183.4	146.8	110.2	-	229.8	21.1	229.8	214.6	177.9	141.2	104.6	-
	62	231.2	18.6	231.2	231.2	227.3	190.8	154.2	117.6	216.8	20.8	216.8	216.8	214.9	178.2	141.5	104.8
	57	236.4	18.7	236.4	236.4	232.5	195.9	159.3	122.7	223.9	21.0	223.9	223.9	220.6	183.9	147.2	110.5

PD240/NM240 (Continued)

Air on Evaporator Coil		Temperature of Air on Condenser Coil															
		Total Capacity[1] (MBh)	Total Input (kW)[2]	Sensible Capacity (MBh) Return Dry Bulb (°F)						Total Capacity[1] (MBh)	Total Input (kW)[2]	Sensible Capacity (MBh) Return Dry Bulb (°F)					
CFM	WB (°F)			90	85	80	75	70	65			90	85	80	75	70	65
		115°F								**125°F**							
6000	77	244.4	23.6	120.7	96.0	71.4	-	-	-	224.0	25.9	115.4	90.7	65.9	-	-	-
	72	222.6	23.2	155.5	130.8	106.2	81.5	-	-	205.1	25.5	150.0	125.3	100.6	75.8	-	-
	67	200.8	22.8	190.3	165.6	140.9	116.3	91.6	-	186.2	25.1	184.7	159.9	135.2	110.5	85.7	-
	62	190.4	22.5	190.4	190.4	177.2	152.5	127.8	103.2	177.6	24.8	177.6	177.6	171.3	146.5	121.8	97.1
	57	198.8	22.8	198.8	195.2	170.5	145.8	121.2	96.5	187.8	25.1	187.8	183.9	159.2	134.4	109.7	85.0
7000	77	248.3	23.6	140.9	104.7	77.1	-	-	-	227.3	25.9	139.8	99.1	71.4	-	-	-
	72	226.1	23.2	169.8	142.2	114.6	87.0	-	-	208.1	25.5	164.3	136.6	108.9	81.3	-	-
	67	204.0	22.9	198.7	179.8	152.2	124.6	97.0	-	188.9	25.2	188.8	174.1	146.4	118.7	91.1	-
	62	193.4	22.6	193.4	193.4	191.3	163.7	136.1	108.5	180.2	24.8	180.2	180.2	180.2	158.3	130.1	102.4
	57	201.9	22.8	201.9	200.1	184.1	156.5	128.9	101.3	190.6	25.1	190.6	188.6	172.4	145.8	117.0	89.3
8000	77	252.1	23.7	161.2	113.3	82.7	-	-	-	230.6	26.0	164.3	107.6	76.9	-	-	-
	72	229.6	23.3	184.1	153.6	123.1	92.5	-	-	211.1	25.6	178.6	148.0	117.3	86.7	-	-
	67	207.1	22.9	207.1	194.0	163.4	132.9	102.4	-	191.7	25.2	191.7	188.3	157.7	127.0	96.4	-
	62	196.4	22.6	196.4	196.4	205.4	174.9	144.4	113.8	182.8	24.9	182.8	182.8	182.8	170.1	138.4	107.8
	57	205.1	22.9	205.1	205.1	197.7	167.2	136.6	106.1	193.3	25.2	193.3	193.3	185.7	157.2	124.4	93.7
9000	72	233.2	23.5	193.9	160.2	126.5	92.8	-	-	214.2	25.8	188.4	154.6	120.8	87.0	-	-
	67	210.3	23.2	210.3	201.6	168.0	134.3	100.6	-	194.5	25.5	194.5	194.5	162.4	128.6	94.8	-
	62	199.4	22.8	199.4	199.4	203.9	170.3	136.6	102.9	185.4	25.1	185.4	185.4	185.4	161.6	127.3	93.5
	57	208.3	23.1	208.3	208.3	203.2	169.5	135.9	102.2	196.1	25.4	196.1	196.1	191.3	158.5	123.7	89.9
10000	72	236.7	23.8	203.6	166.8	129.9	93.1	-	-	217.2	26.1	198.2	161.3	124.3	87.4	-	-
	67	213.5	23.4	213.5	209.3	172.5	135.7	98.9	-	197.2	25.7	197.2	197.2	167.1	130.2	93.2	-
	62	202.5	23.1	202.5	202.5	202.5	165.6	128.8	92.0	188.1	25.4	188.1	188.1	188.1	153.1	116.1	79.2
	57	211.4	23.4	211.4	211.4	208.7	171.9	135.1	98.3	198.9	25.7	198.9	198.9	196.8	159.9	123.0	86.0

1 These capacities are gross ratings. For net capacity, deduct supply air blower motor, MBh. Example: Refer to the appropriate Blower Performance Table for the BHP of the supply air blower motor, MBh = 3.415 x kW and kW = BHP x 0.746 ÷ nameplate rated motor efficiency.

2 These ratings include the condenser fan motors and the compressor motors but not the supply air blower motor.

Heat Pump And Air Handler Heating Capacities

PC090 / NL090

Air Over Evaporator Coil		Capacity[1] & kW	Outdoor Temperature (°F @ 72% RH)							
CFM	DB (°F)		-10	0	10	20	30	40	50	60
2250	55	MBH	34.0	39.6	46.2	53.9	62.9	73.5	86.0	100.6
		KW	4.9	5.3	5.6	6.0	6.3	6.7	7.0	7.3
	70	MBH	31.0	36.6	43.2	50.9	60.0	70.6	83.0	97.6
		KW	5.8	6.1	6.5	6.8	7.1	7.5	7.8	8.2
	80	MBH	28.7	34.3	40.9	48.6	57.7	68.3	80.7	95.3
		KW	6.4	6.8	7.1	7.4	7.8	8.1	8.5	8.8
3000	55	MBH	35.3	40.9	47.5	55.2	64.3	74.9	87.3	101.9
		KW	4.7	5.1	5.4	5.8	6.1	6.5	6.8	7.1
	70	MBH	32.4	38.0	44.5	52.3	61.3	71.9	84.4	99.0
		KW	5.6	5.9	6.3	6.6	6.9	7.3	7.6	8.0
	80	MBH	30.1	35.7	42.3	50.0	59.0	69.6	82.1	96.7
		KW	6.2	6.5	6.9	7.2	7.6	7.9	8.3	8.6
3750	55	MBH	36.6	42.2	48.8	56.5	65.6	76.2	88.6	103.2
		KW	5.2	5.6	5.9	6.3	6.6	7.0	7.3	7.6
	70	MBH	33.7	39.3	45.8	53.6	62.6	73.2	85.7	100.3
		KW	6.1	6.4	6.8	7.1	7.4	7.8	8.1	8.5
	80	MBH	31.4	37.0	43.6	51.3	60.3	70.9	83.4	98.0
		KW	6.7	7.0	7.4	7.7	8.1	8.4	8.8	9.1

[1] These capacities do not include the supply air blower motor heat. For net capacity, add motor heat, MBh. Example: Refer to the appropriate Blower Performance Table for the BHP of the supply air blower motor, MBh = 3.415 x kW and kW = BHP x 0.746 ÷ nameplate rated motor efficiency.

PE090 / NL090

Air Over Evaporator Coil		Capacity[1] & kW	Outdoor Temperature (°F @ 72% RH)							
CFM	DB (°F)		-10	0	10	20	30	40	50	60
2250	55	MBH	23.6	33.8	43.9	54.1	64.2	74.3	84.5	94.6
		KW	4.4	4.5	4.7	4.9	5.0	5.2	5.4	5.6
	70	MBH	22.3	32.5	42.6	52.7	62.9	73.0	83.1	93.3
		KW	5.2	5.4	5.5	5.7	5.9	6.1	6.2	6.4
	80	MBH	21.1	31.2	41.3	51.5	61.6	71.7	81.9	92.0
		KW	5.8	6.0	6.2	6.4	6.5	6.7	6.9	7.1
3000	55	MBH	28.7	38.9	49.0	59.1	69.3	79.4	89.5	99.7
		KW	3.9	4.0	4.2	4.4	4.6	4.7	4.9	5.1
	70	MBH	27.4	37.5	47.6	57.8	67.9	78.0	88.2	98.3
		KW	4.7	4.9	5.1	5.2	5.4	5.6	5.8	5.9
	80	MBH	26.1	36.2	46.4	56.5	66.6	76.8	86.9	97.1
		KW	5.4	5.5	5.7	5.9	6.1	6.2	6.4	6.6
3750	55	MBH	33.8	44.0	54.1	64.2	74.4	84.5	94.6	104.8
		KW	3.6	3.8	4.0	4.2	4.3	4.5	4.7	4.8
	70	MBH	32.5	42.6	52.8	62.9	73.0	83.2	93.3	103.5
		KW	4.5	4.6	4.8	5.0	5.2	5.3	5.5	5.7
	80	MBH	31.2	41.4	51.5	61.6	71.8	81.9	92.1	102.2
		KW	5.1	5.3	5.5	5.6	5.8	6.0	6.2	6.3

[1] These capacities do not include the supply air blower motor heat. For net capacity, add motor heat, MBh. Example: Refer to the appropriate Blower Performance Table for the BHP of the supply air blower motor, MBh = 3.415 x kW and kW = BHP x 0.746 ÷ nameplate rated motor efficiency.

PC120 / NL120

Air Over Evaporator Coil		Capacity[1] & kW	Outdoor Temperature (°F @ 72% RH)							
CFM	DB (°F)		-10	0	10	20	30	40	50	60
3000	55	MBH	32.8	45.7	58.6	71.5	84.4	97.3	110.2	123.1
		KW	6.3	6.6	6.9	7.1	7.4	7.6	7.9	8.2
	70	MBH	29.4	42.3	55.2	68.1	80.9	93.8	106.7	119.6
		KW	7.6	7.8	8.1	8.3	8.6	8.8	9.1	9.4
	80	MBH	30.1	43.0	55.8	68.7	81.6	94.5	107.4	120.3
		KW	8.6	8.9	9.1	9.4	9.7	9.9	10.2	10.4
4000	55	MBH	34.7	47.6	60.5	73.4	86.3	99.2	112.0	124.9
		KW	5.5	5.8	6.0	6.3	6.5	6.8	7.1	7.3
	70	MBH	31.3	44.2	57.1	70.0	82.9	95.8	108.7	121.6
		KW	6.8	7.0	7.3	7.5	7.8	8.0	8.3	8.6
	80	MBH	32.0	44.9	57.8	70.7	83.6	96.5	109.3	122.2
		KW	7.8	8.1	8.3	8.6	8.9	9.1	9.4	9.6
5000	55	MBH	35.9	48.8	61.7	74.6	87.5	100.3	113.2	126.1
		KW	5.1	5.3	5.6	5.9	6.1	6.4	6.6	6.9
	70	MBH	32.4	45.3	58.2	71.1	84.0	96.9	109.8	122.7
		KW	6.3	6.6	6.8	7.1	7.3	7.6	7.9	8.1
	80	MBH	33.1	46.0	58.9	71.8	84.7	97.6	110.5	123.4
		KW	7.4	7.6	7.9	8.2	8.4	8.7	8.9	9.2

[1] These capacities do not include the supply air blower motor heat. For net capacity, add motor heat, MBh. Example: Refer to the appropriate Blower Performance Table for the BHP of the supply air blower motor, MBh = 3.415 x kW and kW = BHP x 0.746 ÷ nameplate rated motor efficiency.

PC180 / NC180 / NL180

Air Over Evaporator Coil		Capacity[1] & kW	Outdoor Temperature (°F @ 72% RH)							
CFM	DB (°F)		-10	0	10	20	30	40	50	60
4500	55	MBH	68.2	80.0	93.8	110.0	129.1	151.5	177.8	208.7
		KW	11.8	12.2	12.7	13.2	13.7	14.1	14.6	15.1
	70	MBH	61.5	73.2	87.0	103.2	122.3	144.7	171.0	201.9
		KW	13.5	14.0	14.4	14.9	15.4	15.9	16.3	16.8
	80	MBH	57.6	69.3	83.1	99.3	118.4	140.8	167.1	198.0
		KW	15.0	15.5	16.0	16.4	16.9	17.4	17.9	18.3
6000	55	MBH	74.0	85.8	99.6	115.8	134.9	157.3	183.6	214.5
		KW	11.2	11.7	12.2	12.6	13.1	13.6	14.1	14.6
	70	MBH	67.3	79.0	92.8	109.0	128.1	150.5	176.8	207.7
		KW	12.9	13.4	13.9	14.4	14.8	15.3	15.8	16.3
	80	MBH	63.4	75.1	88.9	105.1	124.2	146.6	172.9	203.8
		KW	14.5	14.9	15.4	15.9	16.4	16.8	17.3	17.8
7500	55	MBH	72.4	84.1	97.9	114.1	133.2	155.6	181.9	212.8
		KW	12.0	12.5	13.0	13.4	13.9	14.4	14.9	15.4
	70	MBH	65.6	77.3	91.1	107.4	126.4	148.8	175.1	206.0
		KW	13.7	14.2	14.7	15.2	15.6	16.1	16.6	17.1
	80	MBH	61.7	73.4	87.3	103.5	122.5	144.9	171.2	202.1
		KW	15.3	15.7	16.2	16.7	17.2	17.6	18.1	18.6

[1] These capacities do not include the supply air blower motor heat. For net capacity, add motor heat, MBh. Example: Refer to the appropriate Blower Performance Table for the BHP of the supply air blower motor, MBh = 3.415 x kW and kW = BHP x 0.746 ÷ nameplate rated motor efficiency.

PD180 / ND180 / NM180

Air Over Evaporator Coil		Capacity[1] & kW	Outdoor Temperature (°F @ 72% RH)							
CFM	DB (°F)		-10	0	10	20	30	40	50	60
4500	55	MBH	65.6	77.0	90.3	105.8	123.9	145.1	169.7	198.5
		KW	10.0	10.5	11.1	11.6	12.2	12.7	13.3	13.8
	70	MBH	62.2	73.6	86.9	102.4	120.5	141.6	166.3	195.1
		KW	12.0	12.5	13.1	13.6	14.2	14.7	15.3	15.8
	80	MBH	59.5	70.9	84.1	99.7	117.8	138.9	163.6	192.4
		KW	13.4	13.9	14.5	15.0	15.6	16.1	16.7	17.2
6000	55	MBH	71.6	83.0	96.3	111.8	129.9	151.0	175.7	204.5
		KW	9.6	10.2	10.7	11.3	11.8	12.4	12.9	13.4
	70	MBH	68.1	79.5	92.8	108.3	126.5	147.6	172.3	201.1
		KW	11.6	12.2	12.7	13.3	13.8	14.3	14.9	15.4
	80	MBH	65.4	76.8	90.1	105.6	123.7	144.9	169.6	198.3
		KW	13.0	13.6	14.1	14.7	15.2	15.8	16.3	16.9
7500	55	MBH	74.0	85.4	98.7	114.2	132.4	153.5	178.2	207.0
		KW	11.3	11.8	12.4	12.9	13.5	14.0	14.6	15.1
	70	MBH	70.6	82.0	95.3	110.8	128.9	150.1	174.7	203.5
		KW	13.3	13.8	14.4	14.9	15.5	16.0	16.6	17.1
	80	MBH	67.9	79.3	92.6	108.1	126.2	147.4	172.0	200.8
		KW	14.7	15.3	15.8	16.4	16.9	17.5	18.0	18.5

[1] These capacities do not include the supply air blower motor heat. For net capacity, add motor heat, MBh. Example: Refer to the appropriate Blower Performance Table for the BHP of the supply air blower motor, MBh = 3.415 x kW and kW = BHP x 0.746 ÷ nameplate rated motor efficiency.

PD240 / NM240

Air Over Evaporator Coil		Capacity[1] & kW	Outdoor Temperature (°F @ 72% RH)							
CFM	DB (°F)		-10	0	10	20	30	40	50	60
6000	55	MBH	64.6	79.5	97.4	118.8	144.3	174.9	211.4	255.1
		KW	15.7	16.5	17.3	18.1	19.0	19.8	20.6	21.4
	70	MBH	69.5	84.4	102.3	123.7	149.2	179.8	216.3	260.0
		KW	15.4	16.2	17.0	17.9	18.7	19.5	20.3	21.2
	80	MBH	63.3	78.3	96.2	117.5	143.1	173.6	210.2	253.8
		KW	17.2	18.0	18.8	19.6	20.5	21.3	22.1	23.0
8000	55	MBH	71.6	86.6	104.5	125.8	151.4	181.9	218.5	262.1
		KW	15.1	15.9	16.8	17.6	18.4	19.2	20.1	20.9
	70	MBH	76.5	91.5	109.4	130.7	156.3	186.8	223.4	267.0
		KW	14.8	15.6	16.5	17.3	18.1	19.0	19.8	20.6
	80	MBH	70.4	85.3	103.2	124.6	150.1	180.7	217.2	260.9
		KW	16.6	17.4	18.3	19.1	19.9	20.7	21.6	22.4
10000	55	MBH	73.3	88.3	106.1	127.5	153.1	183.6	220.1	263.8
		KW	15.3	16.1	17.0	17.8	18.6	19.4	20.3	21.1
	70	MBH	78.2	93.2	111.0	132.4	158.0	188.5	225.0	268.7
		KW	15.0	15.8	16.7	17.5	18.3	19.1	20.0	20.8
	80	MBH	72.1	87.0	104.9	126.3	151.8	182.4	218.9	262.6
		KW	16.8	17.6	18.5	19.3	20.1	20.9	21.8	22.6

[1] These capacities do not include the supply air blower motor heat. For net capacity, add motor heat, MBh. Example: Refer to the appropriate Blower Performance Table for the BHP of the supply air blower motor, MBh = 3.415 x kW and kW = BHP x 0.746 ÷ nameplate rated motor efficiency.

Air Handling and Hot Water Coil Accessory Heating Capacity

NC300 / 1HW0406[1]

UNIT MODEL	HOT WATER COIL MODEL	GPM	CFM	CAPACITY (MBH)				
				ENTERING WATER TEMPERATURE MINUS ENTRY AIR TEMPERATURE °F.				
				70	90	110	130	150
NC300	1HW0406	50	6,000	204	263	325	384	443
			8,000	236	304	372	440	508
			10,000	265	341	416	492	568
			12,000	291	374	457	540	623

[1] These capacities do not include any blower motor heat.
NOTE: Temperature Water Drop (ºF) = (2 X MBH) / GPM.

Hot Water Coil Capacity Correction And Pressure Drop Vs GPM[1]

HOT WATER COIL MODEL	GPM	PRESSURE DROP PSI	CAPACITY CORRECTION FACTOR
1HW0406	25	0.4	0.79
	50	1.0	1.00
	75	1.8	1.04
	100	3.4	1.07

[1] For pressure drop in feet (water), multiply these values by 2.31.

Air Handling and Steam Coil Accessory Heating Capacity

NC300 / 1NF0454

UNIT MODEL	STEAM COIL MODEL	CAPACITY (MBH) @ 2 PSIG[1]				
		CFM	DRY BULB TEMPERATURE OF AIR ENTERING COIL (°F)			
			10	30	50	70
NC300	1NF0454	6,000	471	424	380	330
		8,000	535	483	432	380
		10,000	592	535	478	422
		12,000	642	580	518	456

[1] These capacities do not include any blower motor heat.

Steam Coil Capacity Correction Factors For High Steam Pressure

STEAM PRESSURE (PSIG)	5	10	15	20	25
CAPACITY CORRECTION FACTOR	1.05	1.12	1.19	1.25	1.30

NOTE: Steam Rate = (lbs/Hr.) = 1.025 x MBH

Airflow Performance

NC090/NL090 Upflow and Horizontal Airflow Performance

NC090/NL090 Upflow

(CFM)	Available External Static Pressure - IWG																			
	0.2		0.4		0.6		0.8		1.0		1.2		1.4		1.6		1.8		2.0	
	RPM	BHP	RPM	BHP	RPM	BHP	RPM	BHP	RPM	BHP	RPM	BHP	RPM	BHP	RPM	BHP	RPM	BHP	RPM	BHP
	Std. 1.5 HP & Field Supplied Drive				Standard 1.5 HP & Drive						High Static 2 HP & Drive									
2250					754	0.8	828	0.9	902	1.0	988	1.1	1051	1.3	1116	1.4	1183	1.5		
2500			707	0.8	777	0.9	851	1.0	925	1.1	996	1.3	1059	1.4	1124	1.5	1191	1.7		
2750			735	0.9	805	1.1	879	1.2	953	1.3	1012	1.4	1076	1.6	1141	1.7				
3000	705	1.0	767	1.1	837	1.2	911	1.3	973	1.5	1035	1.6	1099	1.7	1164	1.9				
3250	741	1.1	802	1.3	872	1.4	947	1.5	1002	1.7	1064	1.8	1127	2.0						
3500	780	1.4	842	1.5	912	1.6	974	1.8	1035	1.9	1097	2.1	1161	2.2						
3750	823	1.6	884	1.7	954	1.9	1012	2.0	1072	2.2	1134	2.3	Exceeds BHP Limitations							

1. Airflow performance includes dry evaporator coil. See Static Resistance table for additional applications.
2. See RPM Selection table to determine desired motor sheave setting and to determine the maximum continuous BHP.
3. kW = BHP x 0.746 ÷ nameplate rated motor efficiency.

NC090/NL090 Horizontal

(CFM)	Available External Static Pressure - IWG																			
	0.2		0.4		0.6		0.8		1.0		1.2		1.4		1.6		1.8		2.0	
	RPM	BHP	RPM	BHP	RPM	BHP	RPM	BHP	RPM	BHP	RPM	BHP	RPM	BHP	RPM	BHP	RPM	BHP	RPM	BHP
	Std. 1.5 HP & Field Supplied Drive				Standard 1.5 HP & Drive						High Static 2 HP & Drive									
2250					747	0.8	816	0.9	889	1.0	954	1.2	1013	1.3	1071	1.5	1128	1.6		
2500			703	0.8	768	0.9	837	1.0	909	1.1	977	1.2	1036	1.4	1094	1.5	1151	1.7		
2750			728	0.9	793	1.0	862	1.1	934	1.2	998	1.4	1056	1.5	1114	1.7				
3000	696	0.9	757	1.1	822	1.2	891	1.3	961	1.4	1019	1.6	1077	1.7	1135	1.9				
3250	729	1.1	790	1.3	855	1.4	924	1.5	984	1.6	1042	1.8	1100	1.9	1159	2.1				
3500	766	1.3	826	1.5	892	1.6	953	1.6	1010	1.9	1069	2.0	1127	2.2						
3750	806	1.6	867	1.7	932	1.8	984	1.9	1041	2.1	1099	2.3	Exceeds BHP Limitations							

1. Airflow performance includes dry evaporator coil. See Static Resistance table for additional applications.
2. See RPM Selection table to determine desired motor sheave setting and to determine the maximum continuous BHP.
3. kW = BHP x 0.746 ÷ nameplate rated motor efficiency.

NC/ND/NL/NM120 Upflow and Horizontal Airflow Performance

NC/ND/NL/NM120 Upflow

(CFM)	Available External Static Pressure - IWG																			
	0.2		0.4		0.6		0.8		1.0		1.2		1.4		1.6		1.8		2.0	
	RPM	BHP	RPM	BHP	RPM	BHP	RPM	BHP	RPM	BHP	RPM	BHP	RPM	BHP	RPM	BHP	RPM	BHP	RPM	BHP
	Std. 2 HP & Field Supplied Drive				Standard 2 HP & Drive								High Static 3 HP & Drive							
2500					671	0.8	728	0.9	788	1.0	853	1.1	926	1.3	975	1.5	1026	1.6	1077	1.7
2750					684	0.9	741	1.0	801	1.1	866	1.2	933	1.4	982	1.6	1032	1.7	1084	1.8
3000					701	1.0	757	1.1	817	1.3	882	1.4	941	1.5	991	1.7	1041	1.8	1092	2.0
3250			664	1.0	719	1.1	776	1.3	836	1.4	903	1.5	952	1.7	1002	1.8	1052	2.0		
3500			685	1.1	741	1.3	797	1.4	858	1.5	917	1.7	966	1.9	1015	2.0	1066	2.2		
3750	653	1.1	709	1.3	764	1.4	821	1.6	884	1.7	933	1.9	982	2.0	1031	2.2	1082	2.3		
4000	679	1.3	735	1.5	790	1.6	847	1.8	903	1.9	952	2.1	1001	2.3	1050	2.4				
4250	707	1.5	762	1.6	818	1.8	875	1.9	924	2.1	973	2.3	1022	2.5	1072	2.7				
4500	737	1.7	792	1.9	850	2.0	899	2.2	948	2.4	997	2.6	1046	2.8						
4750	768	1.9	824	2.1	877	2.2	926	2.5	975	2.7	1024	2.9	1073	3.0						
5000	801	2.1	856	2.3	906	2.5	956	2.8	1005	3.0	1053	3.2	High Static 3 HP & Field Supplied Drive							

1. Airflow performance includes dry evaporator coil. See Static Resistance table for additional applications.
2. See RPM Selection table to determine desired motor sheave setting and to determine the maximum continuous BHP.
3. kW = BHP x 0.746 ÷ nameplate rated motor efficiency.

NC/ND/NL/NM120 Horizontal

(CFM)	Available External Static Pressure - IWG																			
	0.2		0.4		0.6		0.8		1.0		1.2		1.4		1.6		1.8		2.0	
	RPM	BHP	RPM	BHP	RPM	BHP	RPM	BHP	RPM	BHP	RPM	BHP	RPM	BHP	RPM	BHP	RPM	BHP	RPM	BHP
	Std. 2 HP & Field Supplied Drive				Standard 2 HP & Drive								High Static 3 HP & Drive							
2500					686	0.8	730	0.9	778	0.9	840	1.0	917	1.3	964	1.5	1011	1.6	1060	1.7
2750					698	0.9	742	1.0	790	1.0	852	1.1	924	1.4	971	1.6	1019	1.7	1067	1.9
3000					714	1.0	758	1.1	806	1.1	868	1.2	935	1.6	981	1.7	1029	1.9	1078	2.0
3250			684	1.0	734	1.2	778	1.2	826	1.3	902	1.6	948	1.7	995	1.9	1042	2.0		
3500			707	1.2	757	1.3	801	1.4	849	1.4	917	1.7	964	1.9	1010	2.0	1058	2.2		
3750	669	1.2	734	1.4	784	1.5	828	1.6	890	1.7	936	1.9	982	2.1	1029	2.2	1076	2.4		
4000	699	1.4	764	1.6	814	1.7	858	1.8	910	2.0	956	2.1	1002	2.3	1049	2.4				
4250	732	1.6	798	1.8	847	1.9	887	2.0	933	2.2	978	2.4	1025	2.5	1071	2.7				
4500	769	1.8	834	2.0	884	2.1	911	2.3	957	2.4	1003	2.6	1049	2.8						
4750	808	2.1	874	2.3	891	2.3	937	2.5	983	2.7	1029	2.9	1075	3.1						
5000	850	2.3	873	2.4	919	2.6	965	2.8	1011	3.0	1057	3.2	High Static 3 HP & Field Supplied Drive							

1. Airflow performance includes dry evaporator coil. See Static Resistance table for additional applications.
2. See RPM Selection table to determine desired motor sheave setting and to determine the maximum continuous BHP.
3. kW = BHP x 0.746 ÷ nameplate rated motor efficiency.

NC/ND/NL/NM180 Upflow and Horizontal Airflow Performance

NC/ND/NL/NM180 Upflow

(CFM)	Available External Static Pressure - IWG																	
	0.2		0.4		0.6		0.8		1.0		1.2		1.4		1.6		1.8	
	RPM	BHP	RPM	BHP	RPM	BHP	RPM	BHP	RPM	BHP	RPM	BHP	RPM	BHP	RPM	BHP	RPM	BHP
	Std. 3 HP & Field Supplied Drive				Standard 3 HP & Drive						High Static 5 HP & Drive							
4500					583	1.1	634	1.3	688	1.5	738	1.9	782	2.3	827	2.6		
4750					592	1.2	643	1.4	700	1.8	744	2.1	788	2.4	833	2.7		
5000					602	1.2	653	1.4	707	1.9	751	2.2	795	2.6	840	2.9		
5250					613	1.3	664	1.5	716	2.1	759	2.4	804	2.7	848	3.1		
5500			577	1.1	625	1.4	676	1.6	725	2.3	768	2.6	813	2.9	857	3.2		
5750			590	1.2	638	1.4	689	1.7	735	2.5	778	2.8	822	3.1				
6000			603	1.3	651	1.6	702	2.3	745	2.7	789	3.0	833	3.3				
6250			617	1.5	664	1.7	714	2.6	757	2.9	801	3.2	845	3.5				
6500	587	1.4	631	1.6	679	1.8	726	2.8	769	3.1	813	3.4	857	3.8				
6750	601	1.6	645	1.8	693	2.0	739	3.0	782	3.4	826	3.7						
7000	616	1.8	660	2.0	710	2.9	753	3.3	796	3.6	839	3.9						
7250	632	2.1	675	2.3	725	3.2	767	3.6	810	3.9	854	4.2						
7500	647	2.3	691	2.5	740	3.5	782	3.9	825	4.2	High Static 5 HP & Field Supplied Drive							

1. Airflow performance includes dry evaporator coil. See Static Resistance table for additional applications.
2. See RPM Selection table to determine desired motor sheave setting and to determine the maximum continuous BHP.
3. kW = BHP x 0.746 ÷ nameplate rated motor efficiency.

NC/ND/NL/NM180 Horizontal

(CFM)	Available External Static Pressure - IWG																	
	0.2		0.4		0.6		0.8		1.0		1.2		1.4		1.6		1.8	
	RPM	BHP	RPM	BHP	RPM	BHP	RPM	BHP	RPM	BHP	RPM	BHP	RPM	BHP	RPM	BHP	RPM	BHP
	Std. 3 HP & Field Supplied Drive				Standard 3 HP & Drive								High Static 5 HP & Drive					
4500					585	1.5	634	1.6	687	1.8	735	2.0	780	2.5	827	2.7	875	2.9
4750					595	1.6	644	1.7	697	1.9	741	2.4	787	2.7	834	2.9		
5000					605	1.7	655	1.8	708	2.0	749	2.6	795	2.9	842	3.1		
5250					617	1.8	666	2.0	719	2.1	757	2.8	804	3.1	851	3.3		
5500			582	1.8	629	1.9	678	2.1	731	2.3	767	3.0	813	3.2	860	3.4		
5750			594	1.9	642	2.1	691	2.2	737	2.4	778	3.2	824	3.4	871	3.7		
6000			608	2.1	655	2.2	705	2.4	744	3.1	789	3.4	835	3.7				
6250			622	2.2	670	2.4	719	2.6	756	3.3	801	3.6	847	3.9				
6500	589	2.2	637	2.4	684	2.6	733	2.7	769	3.6	814	3.9	860	4.1				
6750	604	2.4	652	2.6	699	2.8	738	3.5	782	3.8	827	4.1	873	4.4				
7000	620	2.6	667	2.8	715	3.0	752	3.8	796	4.1	841	4.4						
7250	636	2.8	683	3.0	731	3.2	766	4.1	811	4.4	856	4.7						
7500	652	3.0	700	3.2	738	4.0	781	4.4	825	4.7	High Static 5 HP & Field Supplied Drive							

1. Airflow performance includes dry evaporator coil. See Static Resistance table for additional applications.
2. See RPM Selection table to determine desired motor sheave setting and to determine the maximum continuous BHP.
3. kW = BHP x 0.746 ÷ nameplate rated motor efficiency.

NC/ND/NL/NM240 Upflow and Horizontal Airflow Performance

NC/ND/NL/NM240 Upflow

(CFM)	Available External Static Pressure - IWG																					
	0.2		0.4		0.6		0.8		1.0		1.2		1.4		1.6		1.8		2.0		2.2	
	RPM	BHP	RPM	BHP	RPM	BHP	RPM	BHP	RPM	BHP	RPM	BHP	RPM	BHP	RPM	BHP	RPM	BHP	RPM	BHP	RPM	BHP
	Std. 5 HP & Field Supplied Drive				High Static 5 HP & Drive								High Static 7.5 HP & Drive									
6000					732	2.2	789	2.6	846	2.9	900	3.1	959	4.0	1008	4.5	1056	4.9	1102	5.2	1146	5.3
6250			685	1.9	742	2.3	799	2.7	856	3.0	910	3.3	967	4.2	1016	4.7	1064	5.1	1110	5.4	1154	5.5
6500			696	2.1	752	2.5	809	2.8	866	3.2	920	3.4	976	4.4	1025	4.9	1072	5.3	1118	5.6		
6750			706	2.2	763	2.6	820	3.0	877	3.3	935	4.0	985	4.6	1034	5.1	1081	5.5	1127	5.8		
7000			718	2.4	774	2.8	831	3.2	888	3.5	945	4.2	994	4.8	1043	5.3	1091	5.7	1137	6.0		
7250			729	2.6	786	3.0	843	3.3	900	3.6	954	4.5	1004	5.0	1053	5.5	1100	5.9	1146	6.2		
7500			741	2.8	798	3.1	855	3.5	912	3.8	965	4.7	1014	5.3	1063	5.8	1111	6.2				
7750	700	2.6	754	2.9	810	3.3	868	3.7	925	4.3	975	4.9	1025	5.5	1074	6.0	1121	6.4				
8000	712	2.8	767	3.1	823	3.5	881	3.9	936	4.6	986	5.2	1036	5.8	1085	6.3	1132	6.7				
8250	726	3.0	780	3.3	837	3.7	894	4.1	948	4.9	998	5.5	1047	6.0	1096	6.5	1144	6.9				
8500	740	3.2	794	3.6	850	3.9	908	4.3	959	5.1	1010	5.8	1059	6.3	1108	6.8						
8750	754	3.4	808	3.8	865	4.2	922	4.8	972	5.4	1022	6.0	1071	6.6	1120	7.1						
9000	768	3.6	823	4.0	879	4.4	934	5.1	984	5.7	1034	6.4	1084	6.9	1133	7.4						
9250	783	3.9	838	4.3	894	4.6	947	5.4	997	6.1	1047	6.7	1097	7.2								
9500	799	4.1	853	4.5	910	4.9	961	5.8	1011	6.4	1061	7.0	1110	7.6								
9750	815	4.4	869	4.8	925	5.5	974	6.1	1024	6.7	1074	7.3	1124	7.9								
10000	831	4.7	885	5.0	939	5.9	988	6.5	1038	7.1	1088	7.7	1138	8.3	High Static 7.5 HP & Field Supplied Drive							

1. Airflow performance includes dry evaporator coil. See Static Resistance table for additional applications.
2. See RPM Selection table to determine desired motor sheave setting and to determine the maximum continuous BHP.
3. kW = BHP x 0.746 ÷ nameplate rated motor efficiency.

NC/ND/NL/NM240 Horizontal

(CFM)	Available External Static Pressure - IWG																					
	0.2		0.4		0.6		0.8		1.0		1.2		1.4		1.6		1.8		2.0		2.2	
	RPM	BHP	RPM	BHP	RPM	BHP	RPM	BHP	RPM	BHP	RPM	BHP	RPM	BHP	RPM	BHP	RPM	BHP	RPM	BHP	RPM	BHP
	Std. 5 HP & Field Supplied Drive		Standard 5 HP & Drive										High Static 7.5 HP & Drive									
6000			708	2.0	754	2.3	801	2.6	849	2.8	898	2.9	976	4.0	1021	4.4	1066	4.8	1111	5.1	1155	5.3
6250			715	2.1	761	2.4	808	2.7	856	2.9	906	3.0	984	4.2	1029	4.6	1074	5.0	1118	5.3	1163	5.5
6500			723	2.3	769	2.6	816	2.8	864	3.0	947	3.9	991	4.4	1036	4.8	1081	5.2	1126	5.4		
6750			731	2.4	777	2.7	824	3.0	872	3.2	955	4.1	999	4.6	1044	5,0	1089	5.3	1134	5.6		
7000			740	2.5	786	2.8	833	3.1	881	3.3	963	4.3	1007	4.7	1052	5.2	1097	5.5	1142	5.8		
7250			749	2.7	796	3.0	842	3.3	890	3.5	971	4.5	1015	4.9	1060	5.3	1105	5.7	1150	6.0		
7500	712	2.6	759	2.9	806	3.2	852	3.4	900	3.6	979	4.7	1024	5.1	1069	5.5	1114	5.9	1158	6.2		
7750	722	2.8	770	3.0	816	3.3	863	3.6	945	4.4	988	4.9	1033	5.3	1078	5.8	1123	6.1				
8000	733	2.9	781	3.2	827	3.5	874	3.8	954	4.6	998	5.1	1042	5.5	1087	6.0	1132	6.3				
8250	745	3.1	793	3.4	839	3.7	886	4.0	964	4.8	1007	5.3	1052	5.8	1096	6.2	1141	6.5				
8500	757	3.3	805	3.6	851	3.9	898	4.2	974	5.1	1017	5.6	1062	6.0	1107	6.4	1152	6.8				
8750	770	3.6	818	3.8	864	4.1	942	4.8	984	5.3	1028	5.8	1072	6.3	1117	6.7						
9000	784	3.8	831	4.1	878	4.4	953	5.1	995	5.6	1039	6.1	1083	6.5	1128	6.9						
9250	798	4.0	845	4.3	923	4.9	964	5.4	1006	5.9	1050	6.3	1094	6.8	1139	7.2						
9500	812	4.3	859	4.6	935	5.2	976	5.7	1018	6.2	1062	6.6	1106	7.1	1151	7.5						
9750	827	4.5	908	5.1	947	5.5	988	6.0	1030	6.5	1074	6.9	1118	7.4								
10000	842	4.8	921	5.4	960	5.8	1001	6.3	1043	6.8	1087	7.3	1131	7.7	High Static 7.5 HP & Field Supplied Drive							

1. Airflow performance includes dry evaporator coil. See Static Resistance table for additional applications.
2. See RPM Selection table to determine desired motor sheave setting and to determine the maximum continuous BHP.
3. kW = BHP x 0.746 ÷ nameplate rated motor efficiency.

NC300 Airflow Performance[1]

CFM	Avaiable External Static Pressure - IWG																					
	0.2		0.4		0.6		0.8		1		1.2		1.4		1.6		1.8		2		2.2	
	RPM	BHP	RPM	BHP	RPM	BHP	RPM	BHP	RPM	BHP	RPM	BHP	RPM	BHP	RPM	BHP	RPM	BHP	RPM	BHP	RPM	BHP
			5 HP Motor & Drive												7.5 HP Motor & Drive							
7500	5 HP & Field supplied Drive		600	2.04	648	2.50	694	3.00	738	3.54	781	4.08	823	4.63	863	5.16	903	5.66	942	6.10	981	6.49
7750			603	2.17	652	2.63	698	3.13	742	3.67	785	4.22	827	4.76	867	5.29	907	5.79	946	6.24	984	6.62
8000			608	2.32	656	2.78	702	3.28	747	3.81	789	4.36	831	4.91	871	5.44	911	5.93	950	6.38	989	6.77
8250			613	2.48	661	2.93	707	3.44	752	3.97	795	4.52	836	5.07	877	5.60	916	6.09	955	6.54	994	6.92
8500			619	2.65	667	3.10	713	3.61	758	4.14	800	4.69	842	5.24	882	5.77	922	6.26	961	6.71	1000	7.09
8750	575	2.43	625	2.83	673	3.28	720	3.79	764	4.32	807	4.87	848	5.42	889	5.95	928	6.44	967	6.89	1006	7.27
9000	581	2.62	632	3.02	680	3.47	726	3.98	771	4.51	814	5.06	855	5.61	896	6.14	935	6.63	974	7.08	1013	7.46
9250	589	2.82	639	3.21	687	3.67	734	4.17	778	4.71	821	5.26	862	5.80	903	6.33	942	6.83	982	7.28		
9500	596	3.02	647	3.42	695	3.88	741	4.38	786	4.91	829	5.46	870	6.01	910	6.54	950	7.03	989	7.48		
9750	604	3.23	655	3.63	703	4.09	749	4.59	794	5.13	836	5.67	878	6.22	918	6.75	958	7.25				
10000	613	3.45	663	3.85	711	4.31	758	4.81	802	5.34	845	5.89	886	6.44	927	6.97	966	7.46				
10250	621	3.68	672	4.07	720	4.53	766	5.03	811	5.57	853	6.12	895	6.66	935	7.19						
10500	630	3.9	680	4.30	729	4.76	775	5.26	819	5.80	862	6.34	904	6.89	944	7.42						
10750	639	4.14	689	4.53	738	4.99	784	5.50	828	6.03	871	6.58	913	7.12								
11000	648	4.37	699	4.77	747	5.23	793	5.73	837	6.27	880	6.82	922	7.36								
11250	657	4.62	708	5.01	756	5.47	802	5.97	847	6.51	890	7.06										
11500	667	4.86	717	5.26	766	5.71	812	6.22	856	6.75	899	7.30										
11750	676	5.11	727	5.50	775	5.96	821	6.46	866	7.00												
12000	686	5.36	737	5.75	785	6.21	831	6.71	876	7.25												
12250	696	5.61	746	6.00	795	6.46	841	6.97	885	7.50												
12500	706	5.86	756	6.26	805	6.72	851	7.22														

High static 7.5 HP & Field Supplied Drive

1. NC300 requires the selection, purchase and field installation of the Supply Fan Motor, Drive Kit and Motor Overloads (See Following Page for Item Selection Tables).

RPM Selection

Unit Model		HP	Max BHP	Motor Sheave	Blower Sheave	6 Turns Open	5 Turns Open	4 Turns Open	3 Turns Open	2 Turns Open	1 Turn Open	Fully Closed
NC/NL090	Std.	1.5	1.73	1VL40	AK69	-[1]	690	743	796	849	902	955
	HS	2	2.30	1VL40	AK56	-[1]	863	929	995	1062	1128	1194
NC/ND/NL/ NM120	Std.	2	2.30	1VL40	AK74	-[1]	641	690	739	789	838	887
	HS	3	3.45	1VP56	AK84	-[1]	906	949	992	1035	1078	1121
NC/ND/NL/ NM180	Std.	3	3.45	1VP50	AK114	-[1]	565	596	627	659	690	721
	HS	5	5.75	2VP50	2B5V94	707	745	782	819	856	894	-[2]
NC/ND/NL/ NM240	Std.	5	5.75	2VP50	2B5V94	686	722	758	794	830	866	-[2]
	HS	7.5	8.63	2VP65	2B5V94	925	960	996	1031	1067	1103	1138

1 Setting not available.
2 Setting not recommended for use with Type B v-belts.

N*090-240 Air Handler Blower Motor and Drive Data

Unit Model	Blower Motor Data					Drive Data									
	HP		RPM	SF	Frame Size	Model Number	Blower RPM Range	Adjustable Motor Sheave		Model Number	Fixed Blower Sheave		Belts		
								Pitch Diameter (in.)	Bore (in.)		Pitch Diameter (in.)	Bore (in.)	Qty.	Pitch Length (in.)	Desig-nation
NC/NL090	Std	1.5	1725	1.15	56	1VL40	690 - 955	2.6 - 3.6	0.875	AK69	6.5	1.000	1	42.3	A41
	HS	2			56HZ	1VL40	863 - 1194	2.6 - 3.6	0.875	AK56	5.2	1.000	1	40.3	A39
NC/ND/NL/ NM120	Std.	2	1725	1.15	56HZ	1VL40	641 - 887	2.6 - 3.6	0.875	AK74	7.0	1.000	1	45.3	A44
	HS	3			56HZ	1VP56	906 - 1121	4.2 - 5.2	0.875	AK84	8.0	1.000	1	48.3	A47
NC/ND/NL/ NM180	Std.	3	1725	1.15	56HZ	1VP50	565 - 721	3.6 - 4.6	0.875	AK114	11.0	1.000	1	45.3	A44
	HS	5			184T	2VP50	707 - 894	3.7 - 4.7	1.125	2B5V94	9.7	1.000	2	41.8	B40
NC/ND/NL/ NM240	Std.	5	1725	1.15	184T	2VP50	686 - 866	3.7 - 4.7	1.125	2B5V94	9.7	1.188	2	41.8	B40
	HS	7.5			213T	2VP65	925 - 1138	5.2 - 6.4	1.375	2B5V94	9.7	1.188	2	46.8	B45

NC300 Drive Kit Data

Unit Model	Drive Kit Model Number	Adjustable Motor Sheave				Fixed Blower Sheave			Belts		
		Sheave Model Number	Blower RPM Range	Pitch Diameter (in.)	Bore (in.)	Sheave Model Number	Pitch Diameter (in.)	Bore (in.)	Qty.	Pitch Length (in.)	Desig-nation
NC300	1LD0440	2VP56	575 - 719	4.0 - 5.0	1 1/8	2AK124	12.0	1 3/16	2	63.3	A62
	1LD0407	2VP60	659 - 815	4.2 - 5.2	1 3/8	2AK114	11.0	1 3/16	2	63.3	A62
	1LD0442	2VP71	762 - 906	5.3 - 6.3	1 3/8	2AK124	12.0	1 3/16	2	63.3	A62

NC300 Motor Kit Data (Non-VFD Rated Motors)

Unit Model	HP	Motor Kit Model Number	Frame Size	Voltage (3PH-60Hz)
NC300	5	2LP04605133	184	208/230/460V
		2LP04605158		575V
	7.5	2LP04607133	213	208/230/460V
		2LP04607158		575V

NC300 Motor Kit Data (VFD Rated Motors)

Unit Model	HP	Motor Kit Model Number	Frame Size	Voltage (3PH-60Hz)
NC300 w/ VFD	5	2LP04605233	184	230/460V
		2LP04605258		575V
	7.5	2LP04607233	213	208/230/460V
		2LP04607258		575V

NC300 Overload Relay Kits (Non-VFD Rated Motors)[1]

UNIT	VOLTAGE	208/230V	460V	575V
MODEL	MOTOR HP	OVERLOAD RELAY KIT		
NC300	5	2MP04708500	2MP04708300	2MP04708300
	7.5	2MP04708700	2MP04708400	2MP04708300

1 Overload is included in the VFD kit.

NC300 Overload Relay Setting (All)

UNIT	VOLTAGE	208/230V	460V	575V
MODEL	MOTOR HP	OVERLOAD RELAY SETTING (Full Load Amps) [1,2]		
NC/300	5	14/13	6.5	5.2
	7.5	21/20	9.5	7.5

1 Motors with Service Factor of 1.15 or Greater: Adjust overload relay dial to the motor nameplate Full Load Amps (FLA).

2 Motors with Service Factor Less Than 1.15: Adjust overload relay dial based on the formula: Motor nameplate FLA x 0.90 = relay setting

Additional Static Resistance

Model	CFM	Wet Indoor[1] Coil	2" Filters	Bottom Return	Electric Heat kW				
					10	16	26	36	50
NC/NL090	2250	0.03	0.10	0.02	0.01	0.02	0.03	0.04	---
	2500	0.03	0.11	0.03	0.01	0.02	0.03	0.05	---
	2750	0.02	0.11	0.03	0.01	0.03	0.04	0.07	---
	3000	0.02	0.12	0.04	0.01	0.03	0.05	0.08	---
	3250	0.01	0.13	0.04	0.02	0.04	0.06	0.09	---
	3500	0.00	0.14	0.05	0.02	0.04	0.07	0.10	---
	3750	0.00	0.15	0.06	0.02	0.05	0.08	0.12	---
NC/ND/NL/NM120	3000	0.08	0.12	0.04	0.01	0.03	0.05	0.08	---
	3250	0.07	0.13	0.04	0.02	0.04	0.06	0.09	---
	3500	0.07	0.14	0.05	0.02	0.04	0.07	0.10	---
	3750	0.06	0.15	0.06	0.02	0.05	0.08	0.12	---
	4000	0.05	0.16	0.07	0.03	0.06	0.09	0.14	---
	4250	0.04	0.18	0.08	0.03	0.06	0.10	0.15	---
	4500	0.03	0.19	0.09	0.03	0.07	0.11	0.17	---
	4750	0.02	0.21	0.10	0.04	0.08	0.13	0.19	---
	5000	0.00	0.23	0.11	0.04	0.09	0.14	0.21	---
NC/ND/NL/NM180	4500	0.07	0.11	0.03	0.03	0.07	0.11	0.17	0.21
	4750	0.06	0.11	0.03	0.04	0.08	0.13	0.19	0.22
	5000	0.06	0.11	0.04	0.04	0.09	0.14	0.21	0.24
	5250	0.06	0.12	0.04	0.05	0.10	0.15	0.23	0.26
	5500	0.05	0.12	0.04	0.05	0.11	0.17	0.25	0.29
	5750	0.05	0.12	0.05	0.06	0.12	0.19	0.28	0.32
	6000	0.05	0.13	0.05	0.06	0.13	0.20	0.30	0.35
	6250	0.04	0.14	0.06	0.07	0.14	0.22	0.33	0.38
	6500	0.03	0.14	0.06	0.07	0.15	0.24	0.35	0.42
	6750	0.03	0.15	0.07	0.08	0.17	0.26	0.38	0.47
	7000	0.02	0.16	0.07	0.08	0.18	0.28	0.41	0.50
	7250	0.01	0.16	0.08	0.09	0.19	0.30	0.44	0.53
	7500	0.00	0.17	0.08	0.10	0.20	0.32	0.47	0.56

Model	CFM	Wet Indoor Coil	2" Filters	Bottom Return	Electric Heat kW		
					20	32	52
NC/ND/NL/NM240	6000	0.08	0.12	0.06	0.01	0.03	0.05
	6250	0.08	0.13	0.06	0.02	0.03	0.05
	6500	0.08	0.13	0.07	0.02	0.04	0.06
	6750	0.07	0.14	0.07	0.02	0.04	0.06
	7000	0.07	0.14	0.08	0.02	0.04	0.07
	7250	0.06	0.15	0.08	0.02	0.05	0.07
	7500	0.06	0.16	0.09	0.02	0.05	0.08
	7750	0.05	0.16	0.09	0.02	0.05	0.08
	8000	0.05	0.17	0.10	0.03	0.06	0.09
	8250	0.04	0.18	0.10	0.03	0.06	0.09
	8500	0.04	0.19	0.11	0.03	0.06	0.10
	8750	0.03	0.20	0.12	0.03	0.07	0.11
	9000	0.02	0.21	0.12	0.03	0.07	0.11
	9250	0.01	0.22	0.13	0.04	0.08	0.12
	9500	0.00	0.23	0.00	0.04	0.08	0.13
	9750	0.00	0.24	0.00	0.04	0.09	0.13
	10000	0.00	0.25	0.00	0.04	0.09	0.14

[1] Pressure drop added by condensate over a dry coil.

Additional Static Resistance (Continued)

Model	CFM	Hot Water Coil	Steam Coil
NC300	**8000**	0.06	0.11
	9000	0.07	0.14
	10000	0.08	0.17
	11000	0.09	0.20
	12000	0.10	0.23

CFM Static Pressure and Power-Altitude and Temperature Corrections

The information below should be used to assist in application of product when being applied at altitudes at or exceeding 1000 feet above sea level.

The air flow rates listed in the standard blower performance tables are based on standard air at sea level. As the altitude or temperature increases, the density of air decreases. In order to use the indoor blower tables for high altitude applications, certain corrections are necessary.

A centrifugal fan is a "constant volume" device. This means that, if the rpm remains constant, the CFM delivered is the same regardless of the density of the air. However, since the air at high altitude is less dense, less static pressure will be generated and less power will be required than a similar application at sea level. Air density correction factors are shown in Altitude Factors Table and Temperature Correction Figure.

Altitude/Temperature Correction Factors Table

Air Temp.	Altitude (Ft.)										
	0	1000	2000	3000	4000	5000	6000	7000	8000	9000	10000
40	1.060	1.022	0.986	0.950	0.916	0.882	0.849	0.818	0.788	0.758	0.729
50	1.039	1.002	0.966	0.931	0.898	0.864	0.832	0.802	0.772	0.743	0.715
60	1.019	0.982	0.948	0.913	0.880	0.848	0.816	0.787	0.757	0.729	0.701
70	1.000	0.964	0.930	0.896	0.864	0.832	0.801	0.772	0.743	0.715	0.688
80	0.982	0.947	0.913	0.880	0.848	0.817	0.787	0.758	0.730	0.702	0.676
90	0.964	0.929	0.897	0.864	0.833	0.802	0.772	0.744	0.716	0.689	0.663
100	0.946	0.912	0.880	0.848	0.817	0.787	0.758	0.730	0.703	0.676	0.651

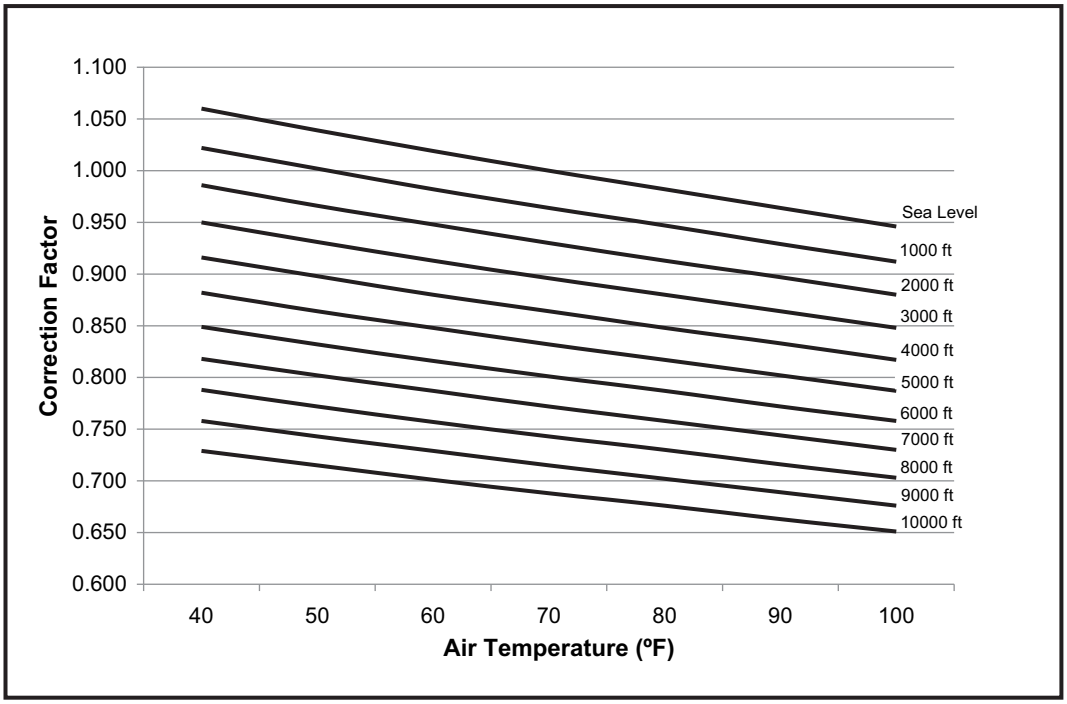

Altitude/Temperature Correction Factors Figure

The examples below will assist in determining the airflow performance of the product at altitude.

Example 1: What are the corrected CFM, static pressure, and BHP at an elevation of 5,000 ft. if the blower performance data is 6,000 CFM, 1.5 IWC and 4.0 BHP?

Solution: At an elevation of 5,000 ft. the indoor blower will still deliver 6,000 CFM if the rpm is unchanged. However, the Altitude/Temperature Correction Factors table must be used to determine the static pressure and BHP. Since no temperature data is given, we will assume an air temperature of 70°F. The table shows the correction factor to be 0.832.

Corrected static pressure = 1.5 x 0.832 = 1.248 IWC

Corrected BHP = 4.0 x 0.832 = 3.328

Example 2: A system, located at 5,000 feet of elevation, is to deliver 6,000 CFM at a static pressure of 1.5". Use the unit blower tables to select the blower speed and the BHP requirement.

Solution: As in the example above, no temperature information is given so 70°F is assumed.

The 1.5" static pressure given is at an elevation of 5,000 ft. The first step is to convert this static pressure to equivalent sea level conditions.

Sea level static pressure = 1.5 / .832 = 1.80"

Enter the blower table at 6000 sCFM and static pressure of 1.8". The rpm listed will be the same rpm needed at 5,000 ft.

Suppose that the corresponding BHP listed in the table is 3.2. This value must be corrected for elevation.

BHP at 5,000 ft. = 3.2 x .832 = 2.66

Drive Selection

1. Determine Upflow or Horizontal supply duct Application.
2. Determine desired airflow.
3. Calculate or measure the amount of external static pressure.
4. Using the operating point, determined from steps 1, 2 & 3, locate this point on the appropriate supply air blower performance table. (Linear interpolation may be necessary.)
5. Noting the RPM and BHP from step 4, locate the appropriate motor and/or drive on the RPM selection table.
6. Review the BHP compared to the motor options available. Select the appropriate motor and, or drive.
7. Review the RPM range for the motor options available. Select the appropriate drive if multiple drives are available for the chosen motor.
8. Determine turns open to obtain the desired operation point.

Example

1. 3250 CFM
2. 1.4 iwg
3. Using the supply air blower performance table below, the following data point was located: 1100 RPM & 1.8 BHP.
4. Using the RPM selection table below, Model X is found.
5. 1.8 BHP exceeds the maximum continuous BHP rating of the 1.5 HP motor. The 2 HP motor is required.
6. 1100 RPM is within the range of the 2 HP drives.
7. Using the 2 HP motor and drive, 1 turn open will achieve 1128 RPM.

Airflow Performance

Example Supply Air Blower Performance

(CFM)	Available External Static Pressure - IWG																			
	0.2		0.4		0.6		0.8		1.0		1.2		1.4		1.6		1.8		2.0	
	RPM	BHP	RPM	BHP	RPM	BHP	RPM	BHP	RPM	BHP	RPM	BHP	RPM	BHP	RPM	BHP	RPM	BHP	RPM	BHP
					Standard 1.5 HP & Drive								High Static 2 HP & Drive							
3000	696	0.9	757	1.1	822	1.2	891	1.3	961	1.3	1019	1.5	1077	1.6	1135	1.8				
3250	729	1.1	790	1.3	855	1.4	924	1.5	984	1.6	1042	1.7	1100	1.8	1159	2.0				
3500	766	1.3	826	1.5	892	1.6	953	1.6	1010	1.8	1069	1.9	1127	2.0						

RPM Selection

Unit Model		HP	Max BHP	Motor Sheave	Blower Sheave	6 Turns Open	5 Turns Open	4 Turns Open	3 Turns Open	2 Turns Open	1 Turn Open	Fully Closed
X	Std.	1.5	1.73	1VL40	AK69	N/A	690	743	796	849	902	955
	HS	2	2.30	1VL40	AK56	N/A	863	929	995	1062	1128	1194

Sound Performance

Outdoor Sound Power Levels (dB), 60 Hz

Size (Tons)	Model	Sound Rating[1]	Octave Bands (Hz)							
			63	125	250	500	1000	2000	4000	8000
090 (7.5)	PC090	89	88	90	89	87	84	81	77	72
	YC090	89	88	89	89	87	84	81	78	73
090 (7.5)	PE090	83	75	81	82	81	79	73	68	62
	YE090	83	77	88	83	82	79	73	68	64
120 (10.0)	PC120	89	88	90	89	87	84	81	77	72
	YC120	90	91	87	90	88	85	80	76	70
	YD120	90	92	89	91	88	85	80	77	71
150 (12.5)	YC150	91	96	88	90	89	86	82	77	71
	YD150	91	92	92	92	89	86	81	78	73
180 (15.0)	PC180	93	93	96	93	90	89	84	77	71
	PD180	93	93	96	93	90	89	84	77	71
	YC180	89	88	90	89	87	84	81	77	72
	YD180	93	93	96	93	90	89	84	77	71
240 (20.0)	PD240	93	93	96	93	90	89	84	77	71
	YC240	93	93	96	93	90	89	84	77	71
	YD240	93	93	96	93	90	89	84	77	71
300 (25.0)	YC300	93	93	96	93	90	89	84	77	71

[1] Rated in accordance with AHRI 270 Standard.

Electrical Data

Electrical Data For Outdoor Models

Electrical Data - Outdoor Unit - AC Without Powered Convenience Outlet

Model	Compressors					Outdoor Fan Motor				Pwr Conv Outlet	Minimum Circuit Ampacity[1]	Maximum Fuse Size (A)[2]
	Power Supply	Qty	RLA (each)	MCC (each)	LRA (each)	Power Supply	HP	Qty	FLA (each)	FLA		
YC090	208/230-3-60	1	25	39	164	208/230-1-60	1/3	2	2.1	-	35.5	45
	460-3-60	1	12.2	19	100	460-1-60	1/3	2	1.2	-	17.6	25
	575-3-60	1	9	14	78	575-1-60	1/3	2	0.9	-	13.1	20
YE090	208/230-3-60	1	26.9	41.9	164	208/230-1-60	1/3	2	2.1	-	37.8	45
	460-3-60	1	13.4	18.7	94	460-1-60	1/3	2	1.2	-	19.2	25
	575-3-60	1	10	14	65	575-1-60	1/3	2	0.9	-	14.3	20
YC120	208/230-3-60	2	15.7	24.5	110	208/230-1-60	3/4	2	3	-	41.4	50
	460-3-60	2	7.8	12	52	460-1-60	3/4	2	1.6	-	20.8	25
	575-3-60	2	5.8	9.1	39	575-1-60	3/4	2	1.4	-	15.8	20
YC150	208/230-3-60	2	22.4	35	149	208/230-1-60	3/4	2	3	-	56.5	70
	460-3-60	2	10.6	17	75	460-1-60	3/4	2	1.6	-	27.1	35
	575-3-60	2	7.7	12	54	575-1-60	3/4	2	1.4	-	20	25
YD150	208/230-3-60	2	22.4	35	149	208/230-1-60	3/4	2	3	-	56.5	70
	460-3-60	2	10.6	17	75	460-1-60	3/4	2	1.6	-	27.1	35
	575-3-60	2	7.7	12	54	575-1-60	3/4	2	1.4	-	20	25
YC180	208/230-3-60	2	25	39	164	208/230-1-60	1/3	4	2.1	-	64.7	80
	460-3-60	2	12.2	19	100	460-1-60	1/3	4	1.2	-	32.2	40
	575-3-60	2	9	14	78	575-1-60	1/3	4	0.9	-	24	30
YD180	208/230-3-60	2	25	39	164	208/230-1-60	3/4	4	3	-	68.4	90
	460-3-60	2	12.2	19	100	460-1-60	3/4	4	1.6	-	33.9	45
	575-3-60	2	9	14	78	575-1-60	3/4	4	1.4	-	25.7	30
YC240	208/230-3-60	2	30.1	47	225	208/230-1-60	3/4	4	3	-	79.8	100
	460-3-60	2	16.7	26	114	460-1-60	3/4	4	1.6	-	44	60
	575-3-60	2	12.2	19	80	575-1-60	3/4	4	1.4	-	32.9	45
YD240	208/230-3-60	2	30.1	47	225	208/230-1-60	3/4	4	3	-	79.8	100
	460-3-60	2	16.7	26	114	460-1-60	3/4	4	1.6	-	44	60
	575-3-60	2	12.2	19	80	575-1-60	3/4	4	1.4	-	32.9	45
YC300	208/230-3-60	2	48.1	75	245	208/230-1-60	3/4	4	3	-	120.3	150
	460-3-60	2	18.6	29	125	460-1-60	3/4	4	1.6	-	48.3	60
	575-3-60	2	14.7	23	100	575-1-60	3/4	4	1.4	-	38.5	50

1 Based on three, 75°C insulated copper conductors in conduit and ambient of 30°C.
2 Maximum fuse or maximum circuit breaker (HACR type per NEC).
Refer to NEC/NFPA No. 70, Articles 440-11, 12 for information on minimum disconnect sizing.

Electrical Data - Outdoor Unit - AC With Powered Convenience Outlet

Model	Compressors					Outdoor Fan Motor				Pwr Conv Outlet	Minimum Circuit Ampacity[1]	Maximum Fuse Size (A)[2]
	Power Supply	Qty	RLA (each)	MCC (each)	LRA (each)	Power Supply	HP	Qty	FLA (each)	FLA		
YC090	208/230-3-60	1	25.0	39	164	208/230-1-60	1/3	2	2.1	10.0	45.5	60
	460-3-60	1	12.2	19	100	460-1-60	1/3	2	1.2	5.0	22.6	30
	575-3-60	1	9.0	14	78	575-1-60	1/3	2	0.9	4.0	17.1	25
YE090	208/230-3-60	1	26.9	41.9	164	208/230-1-60	1/3	2	2.1	-	47.8	60
	460-3-60	1	13.4	18.7	94	460-1-60	1/3	2	1.2	-	24.2	30
	575-3-60	1	10	14	65	575-1-60	1/3	2	0.9	-	18.3	25
YC120	208/230-3-60	2	15.7	24.5	110	208/230-1-60	3/4	2	3.0	10.0	51.4	60
	460-3-60	2	7.8	12.0	52	460-1-60	3/4	2	1.6	5.0	25.8	30
	575-3-60	2	5.8	9.1	39	575-1-60	3/4	2	1.4	4.0	19.8	25
YD120	208/230-3-60	2	16.0	25	110	208/230-1-60	3/4	2	3.0	10.0	52.1	60
	460-3-60	2	7.8	12	52	460-1-60	3/4	2	1.6	5.0	25.8	30
	575-3-60	2	5.7	9	39	575-1-60	3/4	2	1.4	4.0	19.5	25
YC150	208/230-3-60	2	22.4	35	149	208/230-1-60	3/4	2	3.0	10.0	66.5	80
	460-3-60	2	10.6	17	75	460-1-60	3/4	2	1.6	5.0	32.1	40
	575-3-60	2	7.7	12	54	575-1-60	3/4	2	1.4	4.0	24.0	30
YD150	208/230-3-60	2	23.1	36	160	208/230-1-60	3/4	2	3.0	10.0	68.0	90
	460-3-60	2	12.2	19	87	460-1-60	3/4	2	1.6	5.0	35.7	45
	575-3-60	2	8.7	14	62	575-1-60	3/4	2	1.4	4.0	26.3	30
YC180	208/230-3-60	2	25.0	39	164	208/230-1-60	1/3	4	2.1	10.0	74.7	90
	460-3-60	2	12.2	19	100	460-1-60	1/3	4	1.2	5.0	37.2	45
	575-3-60	2	9.0	14	78	575-1-60	1/3	4	0.9	4.0	28.0	35
YD180	208/230-3-60	2	25.0	39	164	208/230-1-60	3/4	4	3.0	10.0	78.4	100
	460-3-60	2	12.2	19	100	460-1-60	3/4	4	1.6	5.0	38.9	50
	575-3-60	2	9.0	14	78	575-1-60	3/4	4	1.4	4.0	29.7	35
YC240	208/230-3-60	2	30.1	47	225	208/230-1-60	3/4	4	3.0	10.0	89.8	110
	460-3-60	2	16.7	26	114	460-1-60	3/4	4	1.6	5.0	49.0	60
	575-3-60	2	12.2	19	80	575-1-60	3/4	4	1.4	4.0	36.9	45
YD240	208/230-3-60	2	30.1	47	225	208/230-1-60	3/4	4	3.0	10.0	89.8	110
	460-3-60	2	16.7	26	114	460-1-60	3/4	4	1.6	5.0	49.0	60
	575-3-60	2	12.2	19	80	575-1-60	3/4	4	1.4	4.0	36.9	45
YC300	208/230-3-60	2	48.1	75	245	208/230-1-60	3/4	4	3.0	10.0	130.3	175
	460-3-60	2	18.6	29	125	460-1-60	3/4	4	1.6	5.0	53.3	70
	575-3-60	2	14.7	23	100	575-1-60	3/4	4	1.4	4.0	42.5	50

1 Based on three, 75°C insulated copper conductors in conduit and ambient of 30°C.
2 Maximum fuse or maximum circuit breaker (HACR type per NEC).
Refer to NEC/NFPA No. 70, Articles 440-11, 12 for information on minimum disconnect sizing.

Electrical Data - Outdoor Unit - HP Without Powered Convenience Outlet

Model	Compressors					Outdoor Fan Motor				Pwr Conv Outlet	Minimum Circuit Ampacity[1]	Maximum Fuse Size (A)[2]
	Power Supply	Qty	RLA (each)	MCC (each)	LRA (each)	Power Supply	HP	Qty	FLA (each)	FLA		
PC090	208/230-3-60	1	25	39	164	208/230-1-60	1/3	2	2.1	-	35.5	45
	460-3-60	1	12.2	19	100	460-1-60	1/3	2	1.2	-	17.6	25
PE090	208/230-3-60	1	25.3	39.5	184	208/230-1-60	1/3	2	2.1	-	35.8	45
	460-3-60	1	9.6	15	84	460-1-60	1/3	2	1.2	-	14.4	20
PC120	208/230-3-60	2	15.7	24.5	110	208/230-1-60	3/4	2	3.03	-	41.4	50
	460-3-60	2	7.7	12	52	460-1-60	3/4	2	1.6	-	20.8	25
PC180	208/230-3-60	2	25	39	164	208/230-1-60	1/3	4	2.1	-	64.7	80
	460-3-60	2	12.2	19	100	460-1-60	1/3	4	1.2	-	32.2	40
PD180	208/230-3-60	2	25	39	164	208/230-1-60	1/3	4	2.1	-	64.7	80
	460-3-60	2	12.2	19	100	460-1-60	1/3	4	1.2	-	32.2	40
PD240	208/230-3-60	2	30.1	47	225	208/230-1-60	3/4	4	3	-	79.8	100
	460-3-60	2	16.7	26	114	460-1-60	3/4	4	1.6	-	44	60

1 Based on three, 75°C insulated copper conductors in conduit and ambient of 30°C.
2 Maximum fuse or maximum circuit breaker (HACR type per NEC).
Refer to NEC/NFPA No. 70, Articles 440-11, 12 for information on minimum disconnect sizing.

Electrical Data - Outdoor Unit - HP With Powered Convenience Outlet

Model	Compressors					Outdoor Fan Motor				Pwr Conv Outlet	Minimum Circuit Ampacity[1]	Maximum Fuse Size (A)[2]
	Power Supply	Qty	RLA (each)	MCC (each)	LRA (each)	Power Supply	HP	Qty	FLA (each)	FLA		
PC090	208/230-3-60	1	25	39	164	208/230-1-60	1/3	2	2.1	10	45.5	60
	460-3-60	1	12.2	19	100	460-1-60	1/3	2	1.2	5	22.6	30
PE090	208/230-3-60	1	25.3	39.5	184	208/230-1-60	1/3	2	2.1	-	45.8	50
	460-3-60	1	9.6	15	84	460-1-60	1/3	2	1.2	-	19.4	25
PC120	208/230-3-60	2	15.7	24.5	110	208/230-1-60	3/4	2	3.03	10	51.4	60
	460-3-60	2	7.7	12	52	460-1-60	3/4	2	1.6	5	25.8	30
PC180	208/230-3-60	2	25	39	164	208/230-1-60	1/3	4	2.1	10	74.7	90
	460-3-60	2	12.2	19	100	460-1-60	1/3	4	1.2	5	37.2	45
PD180	208/230-3-60	2	25	39	164	208/230-1-60	1/3	4	2.1	10	74.7	90
	460-3-60	2	12.2	19	100	460-1-60	1/3	4	1.2	5	37.2	45
PD240	208/230-3-60	2	30.1	47	225	208/230-1-60	3/4	4	3	10	89.8	110
	460-3-60	2	16.7	26	114	460-1-60	3/4	4	1.6	5	49	60

1 Based on three, 75°C insulated copper conductors in conduit and ambient of 30°C.
2 Maximum fuse or maximum circuit breaker (HACR type per NEC).
Refer to NEC/NFPA No. 70, Articles 440-11, 12 for information on minimum disconnect sizing.

Electrical Data For Indoor Models

Electrical Data - Evaporator Units

Motor HP	Power Supply	Supply Blower Motor	Electric Heat Option				MCA[1] (Amps)	Max Fuse[2]/ Breaker[3] Size (Amps)
		FLA	Model	KW	Stages	Amps		
NC090 C00B (CONSTANT VOLUME)								
1.5	208-3-60	5.0	None	---	---	---	6.3	15
			10 KW	7.5	1	20.8	32.3	35
			16 KW	12	2	33.4	47.9	50
			26 KW	19.5	2	54.2	73.9	80
			36 KW	27	2	75.1	99.9	100
	230-3-60	5.2	None	---	---	---	6.5	15
			10 KW	10	1	24.1	36.6	40
			16 KW	16	2	38.5	54.6	60
			26 KW	26	2	62.5	84.7	90
			36 KW	36	2	86.6	114.8	125
	460-3-60	2.6	None	---	---	---	3.3	15
			10 KW	10	1	12	18.3	20
			16 KW	16	2	19.2	27.3	30
			26 KW	26	2	31.3	42.3	45
			36 KW	36	2	43.3	57.4	60
	575-3-60	2.0	None	---	---	---	2.5	15
			10 KW	10	1	9.6	14.5	15
			16 KW	16	2	15.4	21.7	25
			26 KW	26	2	25	33.8	35
			36 KW	36	2	34.6	45.8	50
NL090 C00B (INTELLISPEED)								
1.5	208-3-60	4.3	None	---	---	---	5.4	15
			10 KW	7.5	1	20.8	31.4	35
			16 KW	12	2	33.4	47.0	50
			26 KW	19.5	2	54.2	73.0	80
			36 KW	27	2	75.1	99.1	100
	230-3-60	4.2	None	---	---	---	5.3	15
			10 KW	10	1	24.1	35.3	40
			16 KW	16	2	38.5	53.4	60
			26 KW	26	2	62.5	83.4	90
			36 KW	36	2	86.6	113.5	125
	460-3-60	2.1	None	---	---	---	2.6	15
			10 KW	10	1	12.0	17.7	20
			16 KW	16	2	19.2	26.7	30
			26 KW	26	2	31.3	41.7	45
			36 KW	36	2	43.3	56.8	60
	575-3-60	1.8	None	---	---	---	2.3	15
			10 KW	10	1	9.6	14.3	15
			16 KW	16	2	15.4	21.5	25
			26 KW	26	2	25.0	33.5	35
			36 KW	36	2	34.6	45.6	50
NC090 C00C (CONSTANT VOLUME)								
2.0	208-3-60	6.6	None	---	---	---	8.3	15
			10 KW	7.5	1	20.8	34.3	35
			16 KW	12	2	33.4	49.9	50
			26 KW	19.5	2	54.2	75.9	80
			36 KW	27	2	75.1	101.9	110
	230-3-60	6.8	None	---	---	---	8.5	15
			10 KW	10	1	24.1	38.6	40
			16 KW	16	2	38.5	56.6	60
			26 KW	26	2	62.5	86.7	90
			36 KW	36	2	86.6	116.8	125
	460-3-60	3.4	None	---	---	---	4.3	15
			10 KW	10	1	12	19.3	20
			16 KW	16	2	19.2	28.3	30
			26 KW	26	2	31.3	43.3	45
			36 KW	36	2	43.3	58.4	60
	575-3-60	2.4	None	---	---	---	3	15
			10 KW	10	1	9.6	15	15
			16 KW	16	2	15.4	22.2	25
			26 KW	26	2	25	34.3	35
			36 KW	36	2	34.6	46.3	50

Electrical Data - Evaporator Units (Continued)

Motor HP	Power Supply	Supply Blower Motor	Electric Heat Option				MCA[1] (Amps)	Max Fuse[2]/ Breaker[3] Size (Amps)
		FLA	Model	KW	Stages	Amps		
NL090 (NL/NM) 120 C00C (INTELLISPEED)								
2.0	208-3-60	5.8	None	---	---	---	7.3	15
			10 KW	7.5	1	20.8	33.3	35
			16 KW	12	2	33.4	48.9	50
			26 KW	19.5	2	54.2	74.9	80
			36 KW	27	2	75.1	100.9	110
	230-3-60	5.8	None	---	---	---	7.3	15
			10 KW	10	1	24.1	37.3	40
			16 KW	16	2	38.5	55.4	60
			26 KW	26	2	62.5	85.4	90
			36 KW	36	2	86.6	115.5	125
	460-3-60	2.9	None	---	---	---	3.6	15
			10 KW	10	1	12.0	18.7	20
			16 KW	16	2	19.2	27.7	30
			26 KW	26	2	31.3	42.7	45
			36 KW	36	2	43.3	57.8	60
	575-3-60	2.2	None	---	---	---	2.8	15
			10 KW	10	1	9.6	14.8	15
			16 KW	16	2	15.4	22	25
			26 KW	26	2	25.0	34	35
			36 KW	36	2	34.6	46.1	50
(NC/ND)120 C00D (CONSTANT VOLUME)								
2.0	208-3-60	6.0	None	---	---	---	7.5	15
			10 KW	7.5	1	20.8	33.5	35
			16 KW	12	2	33.4	49.1	50
			26 KW	19.5	2	54.2	75.2	80
			36 KW	27	2	75.1	101.2	110
	230-3-60	5.8	None	---	---	---	7.3	15
			10 KW	10	1	24.1	37.3	40
			16 KW	16	2	38.5	55.4	60
			26 KW	26	2	62.5	85.4	90
			36 KW	36	2	86.6	155.5	125
	460-3-60	2.9	None	---	---	---	3.6	15
			10 KW	10	1	12	18.7	20
			16 KW	16	2	19.2	27.7	30
			26 KW	26	2	31.3	42.7	45
			36 KW	36	2	43.3	57.8	60
	575-3-60	2.2	None	---	---	---	2.8	15
			10 KW	10	1	9.6	14.8	15
			16 KW	16	2	15.4	22	25
			26 KW	26	2	25	34	35
			36 KW	36	2	34.6	46.1	50
(NC/ND)120 C00D (CONSTANT VOLUME)								
3.0	208-3-60	8.3	None	---	---	---	10.4	15
			10 KW	7.5	1	20.8	36.4	40
			16 KW	12	2	33.4	52.0	60
			26 KW	19.5	2	54.2	78.0	80
			36 KW	27	2	75.1	104.2	110
	230-3-60	8.2	None	---	---	---	10.3	15
			10 KW	10	1	24.1	40.3	45
			16 KW	16	2	38.5	58.4	60
			26 KW	26	2	62.5	88.4	90
			36 KW	36	2	86.6	118.5	125
	460-3-60	4.1	None	---	---	---	5.1	15
			10 KW	10	1	12	20.2	25
			16 KW	16	2	19.2	29.2	30
			26 KW	26	2	31.3	44.2	45
			36 KW	36	2	43.3	59.3	60
	575-3-60	3.1	None	---	---	---	3.9	15
			10 KW	10	1	9.6	15.9	20
			16 KW	16	2	15.4	23.1	25
			26 KW	26	2	25	35.1	40
			36 KW	36	2	34.6	47.2	50

Electrical Data - Evaporator Units (Continued)

Motor HP	Power Supply	Supply Blower Motor	Electric Heat Option				MCA[1] (Amps)	Max Fuse[2]/ Breaker[3] Size (Amps)
		FLA	Model	KW	Stages	Amps		
(NL/NM) 120, NL/NM) 180 C00D (INTELLISPEED)								
3.0	208-3-60	8.3	None	---	---	---	10.4	15
			10 KW	7.5	1	20.8	36.4	40
			16 KW	12	2	33.4	52	60
			26 KW	19.5	2	54.2	78	80
			36 KW	27	2	75.1	104.1	110
			50 KW[4]	37.6	2	104.2	140.8	150
	230-3-60	8.2	None	---	---	---	10.3	15
			10 KW	10	1	24.1	40.3	45
			16 KW	16	2	38.5	58.4	60
			26 KW	26	2	62.5	88.4	90
			36 KW	36	2	86.6	118.5	125
			50 KW[4]	50	2	120.3	130.5	150
	460-3-60	4.1	None	---	---	---	5.1	15
			10 KW	10	1	12	20.2	25
			16 KW	16	2	19.2	29.2	30
			26 KW	26	2	31.3	44.2	45
			36 KW	36	2	43.3	59.3	60
			50 KW[4]	50	2	60.1	65.3	70
	575-3-60	3.2	None	---	---	---	4	15
			10 KW	10	1	9.6	16	20
			16 KW	16	2	15.4	23.2	25
			26 KW	26	2	25	35.3	40
			36 KW	36	2	34.6	47.3	50
			50 KW	50	2	48.1	52.1	60
(NC/ND) 180 C00D (CONSTANT VOLUME)								
3.0	208-3-60	9.6	None	---	---	---	12	15
			10 KW	7.5	1	20.8	38	40
			16 KW	12	2	33.4	53.6	60
			26 KW	19.5	2	54.2	79.7	80
			36 KW	27	2	75.1	105.7	110
			50 KW4	37.6	2	104.2	142.5	150
	230-3-60	9.4	None	---	---	---	11.8	15
			10 KW	10	1	24.1	41.8	45
			16 KW	16	2	38.5	59.9	60
			26 KW	26	2	62.5	89.9	90
			36 KW	36	2	86.6	120	125
			50 KW4	50	2	120.3	132	150
	460-3-60	4.7	None	---	---	---	5.9	15
			10 KW	10	1	12	20.9	25
			16 KW	16	2	19.2	29.9	30
			26 KW	26	2	31.3	45	45
			36 KW	36	2	43.3	60	60
			50 KW4	50	2	60.1	66	70
	575-3-60	3.6	None	---	---	---	4.5	15
			10 KW	10	1	9.6	16.5	20
			16 KW	16	2	15.4	23.7	25
			26 KW	26	2	25	35.8	40
			36 KW	36	2	34.6	47.8	50
			50 KW4	50	2	48.1	52.6	60

Electrical Data - Evaporator Units (Continued)

Motor HP	Power Supply	Supply Blower Motor	Electric Heat Option				MCA[1] (Amps)	Max Fuse[2]/ Breaker[3] Size (Amps)
		FLA	Model	KW	Stages	Amps		
(NC\ND) 180 C00E (CONSTANT VOLUME)								
5.0	208-3-60	14.0	None	---	---	---	17.5	20
			10 KW	7.5	1	20.8	43.5	45
			16 KW	12	2	33.3	59.1	60
			26 KW	19.5	2	54.1	85.2	90
			36 KW	27	2	74.9	111.2	125
			50 KW	37.6	2	104.4	148.0	150
	230-3-60	13.2	None	---	---	---	16.5	20
			10 KW	10	1	24.1	46.6	50
			16 KW	16	2	38.5	64.6	70
			26 KW	26	2	62.5	94.7	100
			36 KW	36	2	86.6	124.8	125
			50 KW	50	2	120.3	136.8	150
	460-3-60	6.6	None	---	---	---	8.3	15
			10 KW	10	1	12.0	23.3	25
			16 KW	16	2	19.2	32.3	35
			26 KW	26	2	31.3	47.3	50
			36 KW	36	2	43.3	62.4	70
			50 KW	50	2	60.1	68.4	70
	575-3-60	5.2	None	---	---	---	6.5	15
			10 KW	10	1	9.6	18.5	20
			16 KW	16	2	15.4	25.7	30
			26 KW	26	2	25.0	37.8	40
			36 KW	36	2	34.6	49.8	50
			50 KW	50	2	48.1	54.6	60
(NL/NM) 180 C00E (INTELLISPEED)								
5.0	208-3-60	13.5	None	---	---	---	16.9	20
			10 KW	7.5	1	20.8	42.9	45
			16 KW	12	2	33.4	58.5	60
			26 KW	19.5	2	54.2	84.5	90
			36 KW	27	2	75.1	110.6	125
			50 KW	37.6	2	104.2	147.3	150
	230-3-60	13.0	None	---	---	---	16.3	20
			10 KW	10	1	24.1	46.3	50
			16 KW	16	2	38.5	64.4	70
			26 KW	26	2	62.5	94.4	100
			36 KW	36	2	86.6	124.5	125
			50 KW	50	2	120.3	136.5	150
	460-3-60	6.5	None	---	---	---	8.1	15
			10 KW	10	1	12.0	23.2	25
			16 KW	16	2	19.2	32.2	35
			26 KW	26	2	31.3	47.2	50
			36 KW	36	2	43.3	62.3	70
			50 KW	50	2	60.1	68.3	70
	575-3-60	5.2	None	---	---	---	6.5	15
			10 KW	10	1	9.6	18.5	20
			16 KW	16	2	15.4	25.7	30
			26 KW	26	2	25.0	37.8	40
			36 KW	36	2	34.6	49.8	50
			50 KW	50	2	48.1	54.6	60

Electrical Data - Evaporator Units (Continued)

Motor HP	Power Supply	Supply Blower Motor	Electric Heat Option				MCA[1] (Amps)	Max Fuse[2]/ Breaker[3] Size (Amps)
		FLA	Model	KW	Stages	Amps		
(NC\ND) 240 C00E (CONSTANT VOLUME)								
5.0	208-3-60	14.0	None	---	---	---	17.5	20
			20 KW	15	1	41.6	69.5	70
			32 KW	24	2	66.6	100.8	110
			52 KW	39.1	2	108.5	153.2	175
	230-3-60	13.2	None	--	---	---	16.5	20
			20 KW	20	1	48.1	76.6	80
			32 KW	32	2	77.0	112.7	125
			52 KW	52	2	125.1	141.6	150
	460-3-60	6.6	None	---	---	---	8.3	15
			20 KW	20	1	24.1	38.3	40
			32 KW	32	2	38.5	56.4	60
			52 KW	52	2	62.5	70.8	80
	575-3-60	5.2	None	---	---	---	6.5	15
			20 KW	20	1	19.2	30.6	35
			32 KW	32	2	30.8	45.0	45
			52 KW	52	2	50.0	56.5	60
(NL/NM) 240 C00E (INTELLISPEED)								
5.0	208-3-60	13.5	None	---	---	---	16.9	20
			20 KW	15	1	41.6	68.9	70
			32 KW	24	2	66.6	100.1	110
			52 KW	39.1	2	108.5	152.5	175
	230-3-60	13.0	None	--	---	---	16.3	20
			20 KW	20	1	48.1	76.4	80
			32 KW	32	2	77.0	112.5	125
			52 KW	52	2	125.1	141.3	150
	460-3-60	6.5	None	---	---	---	8.1	15
			20 KW	20	1	24.1	38.2	40
			32 KW	32	2	38.5	56.2	60
			52 KW	52	2	62.5	70.7	80
	575-3-60	5.2	None	---	---	---	6.5	15
			20 KW	20	1	19.2	30.6	35
			32 KW	32	2	30.8	45.0	45
			52 KW	52	2	50.0	56.5	60
NC300C00N[5]								
5.0	208-3-60	16.7	None	---	---	---	21.0	35
	230-3-60	15.2	None	---	---	---	19.0	30
	460-3-60	7.6	None	---	---	---	10.0	15
	575-3-60	6.1	None	---	---	---	8.0	15
(NC/NL/ND/NM) 240 C00F (CONSTANT VOLUME & (INTELLISPEED)								
7.5[6]	208-3-60	20.0	None	---	---	---	25.0	25
			20 KW	15	1	41.6	77.0	80
			32 KW	24	2	66.6	108.3	110
			52 KW	39.1	2	108.5	160.7	175
	230-3-60	19.4	None	--	---	---	24.3	25
			20 KW	20	1	48.1	84.4	90
			32 KW	32	2	77.0	120.52	125
			52 KW	52	2	125.1	149.3	150
	460-3-60	9.7	None	---	---	---	12.1	15
			20 KW	20	1	24.1	42.2	45
			32 KW	32	2	38.5	60.2	70
			52 KW	52	2	62.5	74.7	80
	575-3-60	7.8	None	---	---	---	9.8	15
			20 KW	20	1	19.2	33.8	35
			32 KW	32	2	30.8	48.2	50
			52 KW	52	2	50.0	59.8	60

Electrical Data - Evaporator Units (Continued)

Motor HP	Power Supply	Supply Blower Motor	Electric Heat Option				MCA[1] (Amps)	Max Fuse[2]/ Breaker[3] Size (Amps)
		FLA	Model	KW	Stages	Amps		
NC300C00N[5]								
7.5	208-3-60	24.2	None	---	---	---	30.0	35
	230-3-60	22.0	None	---	---	---	28.0	30
	460-3-60	11.0	None	---	---	---	14.0	15
	575-3-60	9.0	None	---	---	---	11.0	20

1 Minimum Circuit Ampacity.
2 Dual Element, Time Delay Type.
3 HACR type per NEC.
4 (NC/ND)180C00D Models Only
5 Motors are not shipped with these models. Motor and Drive Kits are required.
6 NC/ND240C00F Motors Require Overload Relay

Typical Wiring Diagrams

Air Conditioning Condensing Units

Typical YC090 Wiring Diagram

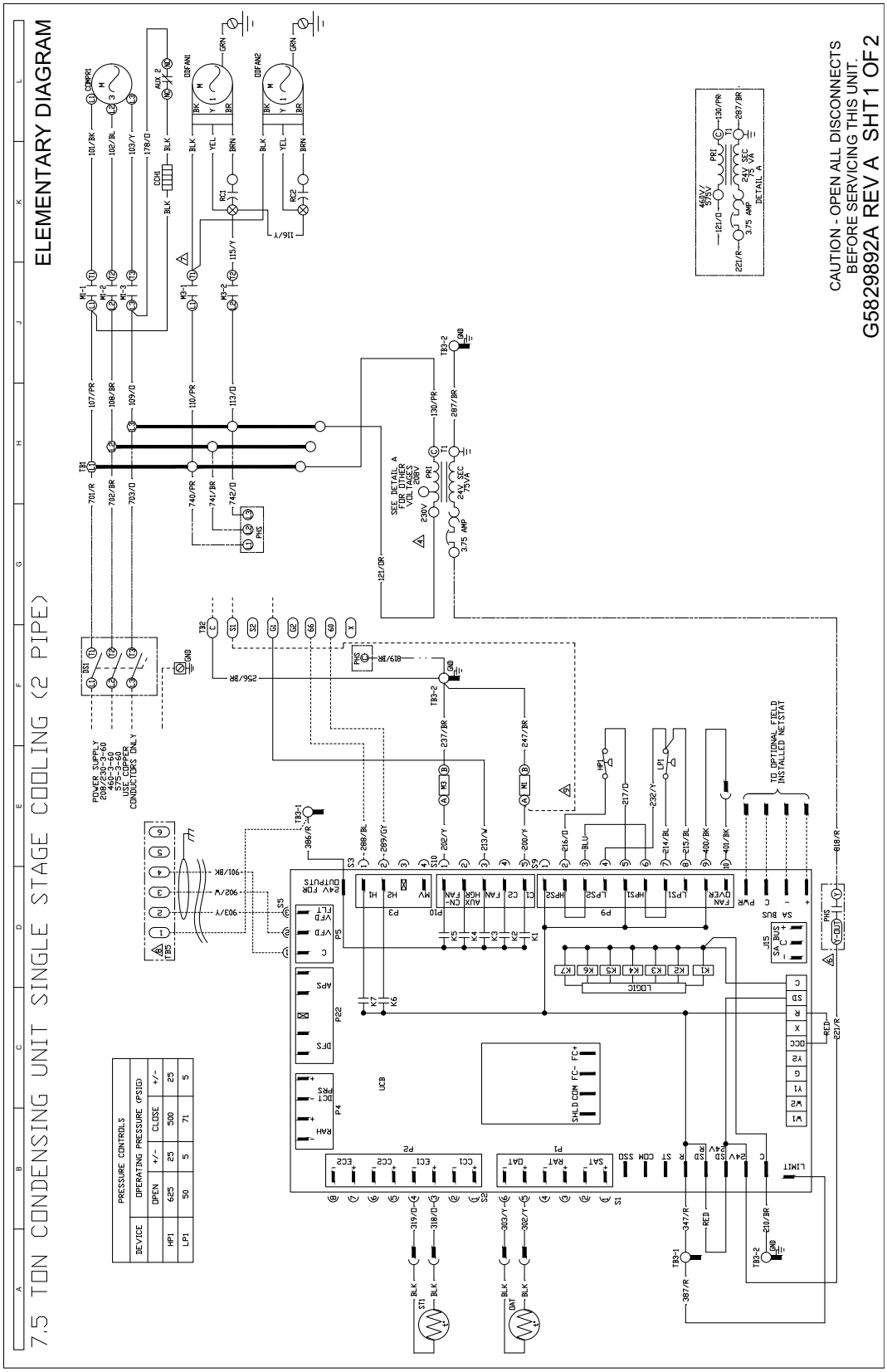

Typical YE090 Wiring Diagram

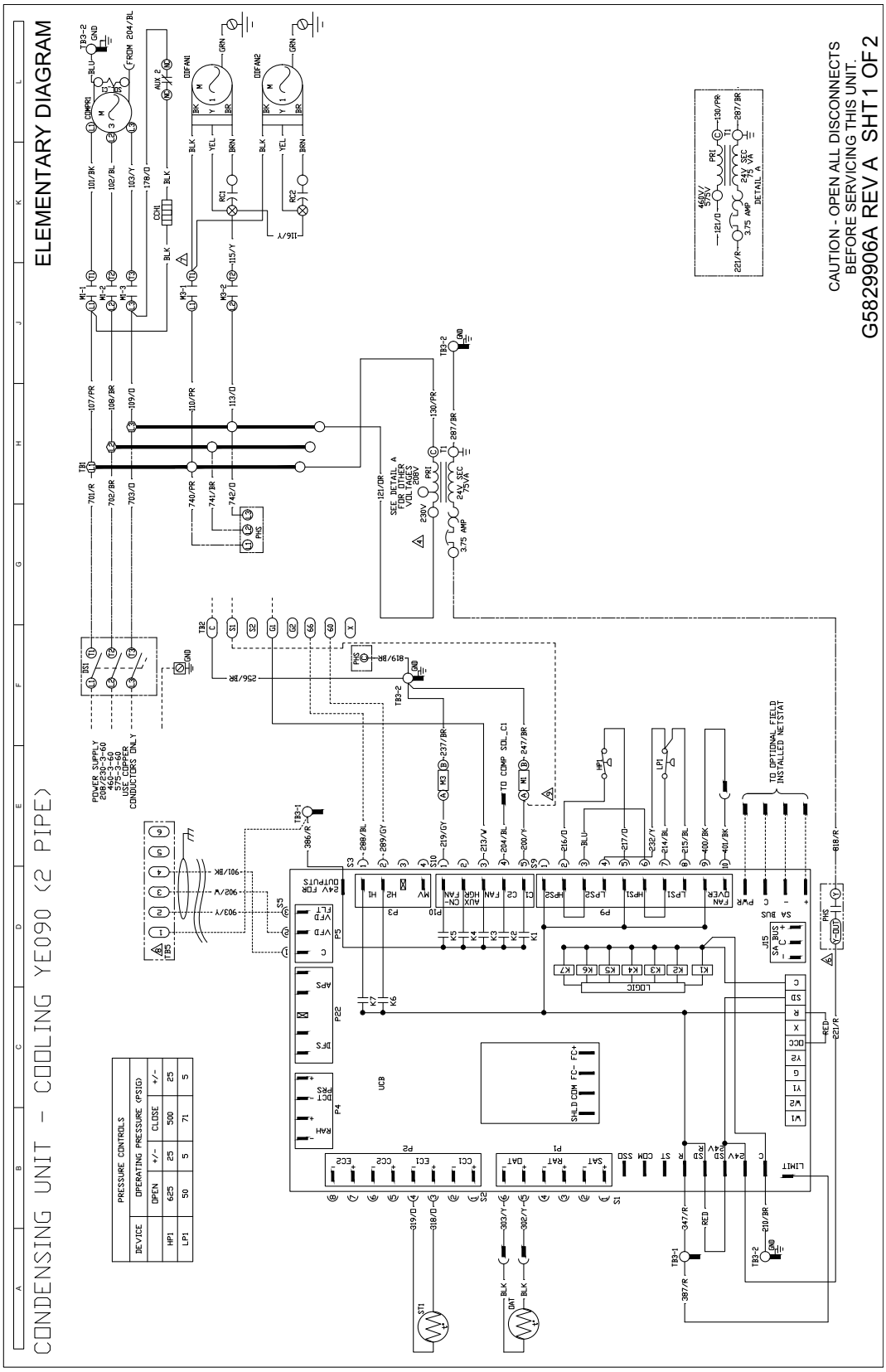

Typical YC120 - 150 Wiring Diagram

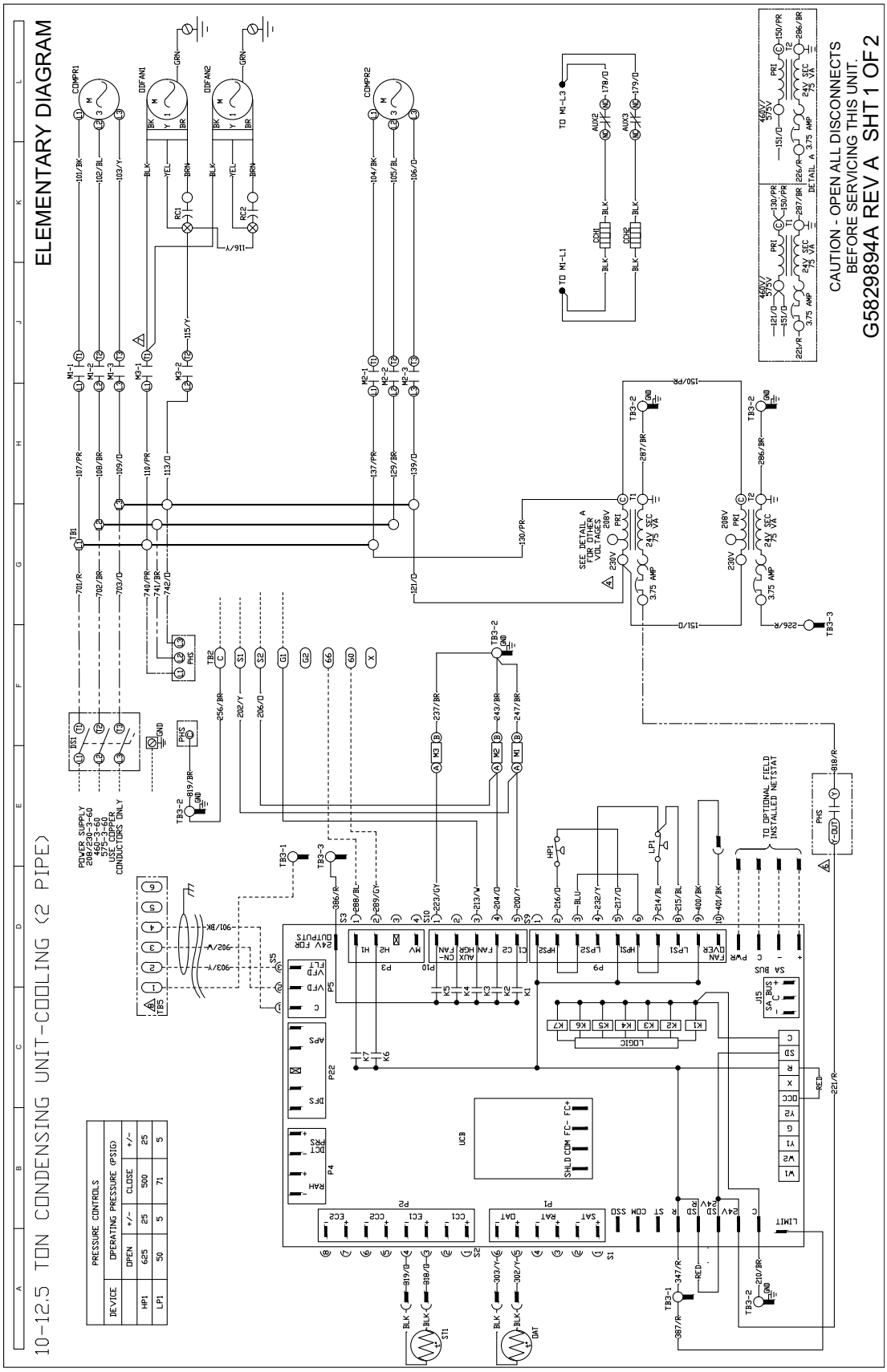

Typical YD120 - 150 Wiring Diagram

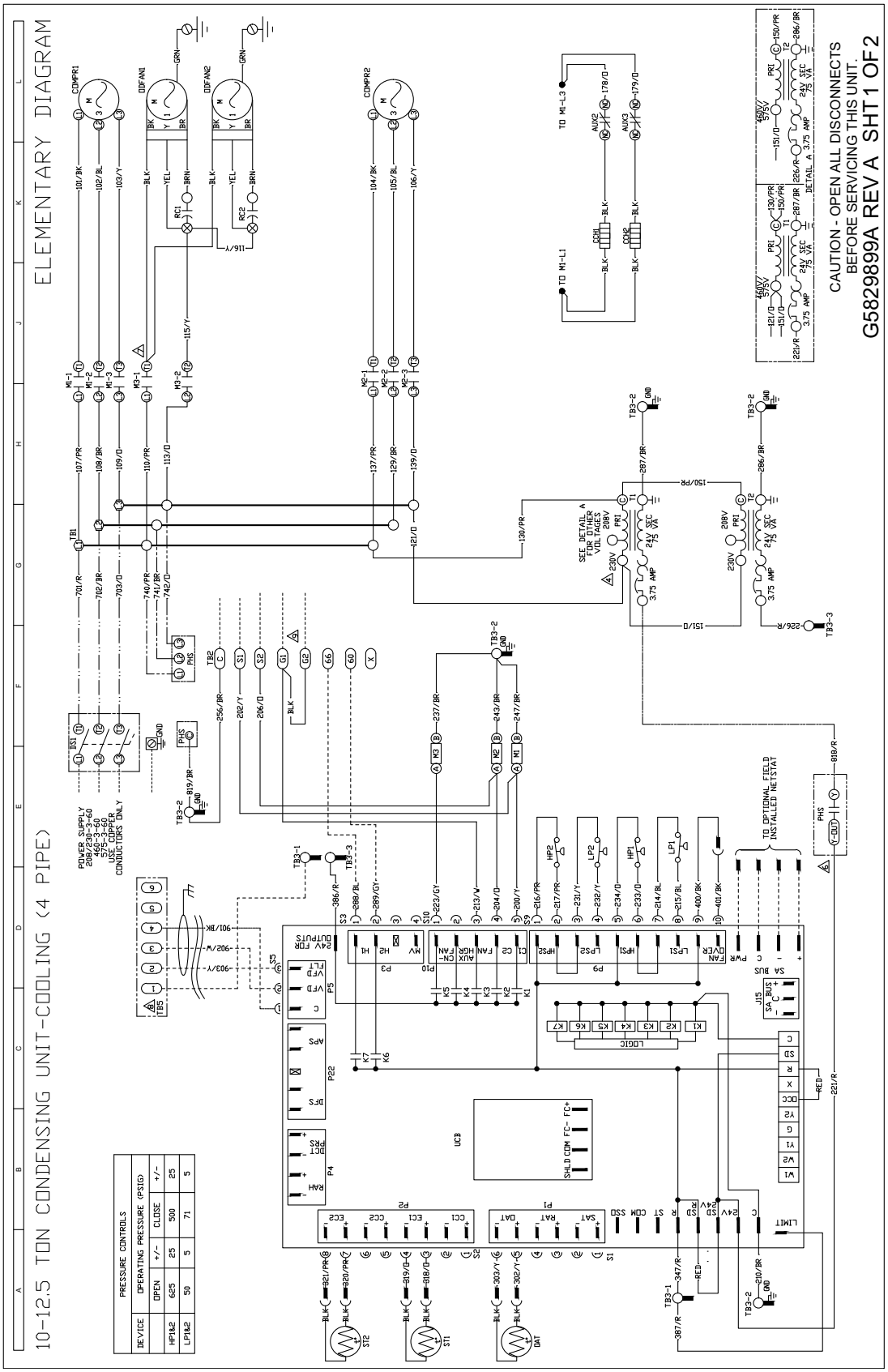

Typical YC180 Wiring Diagram

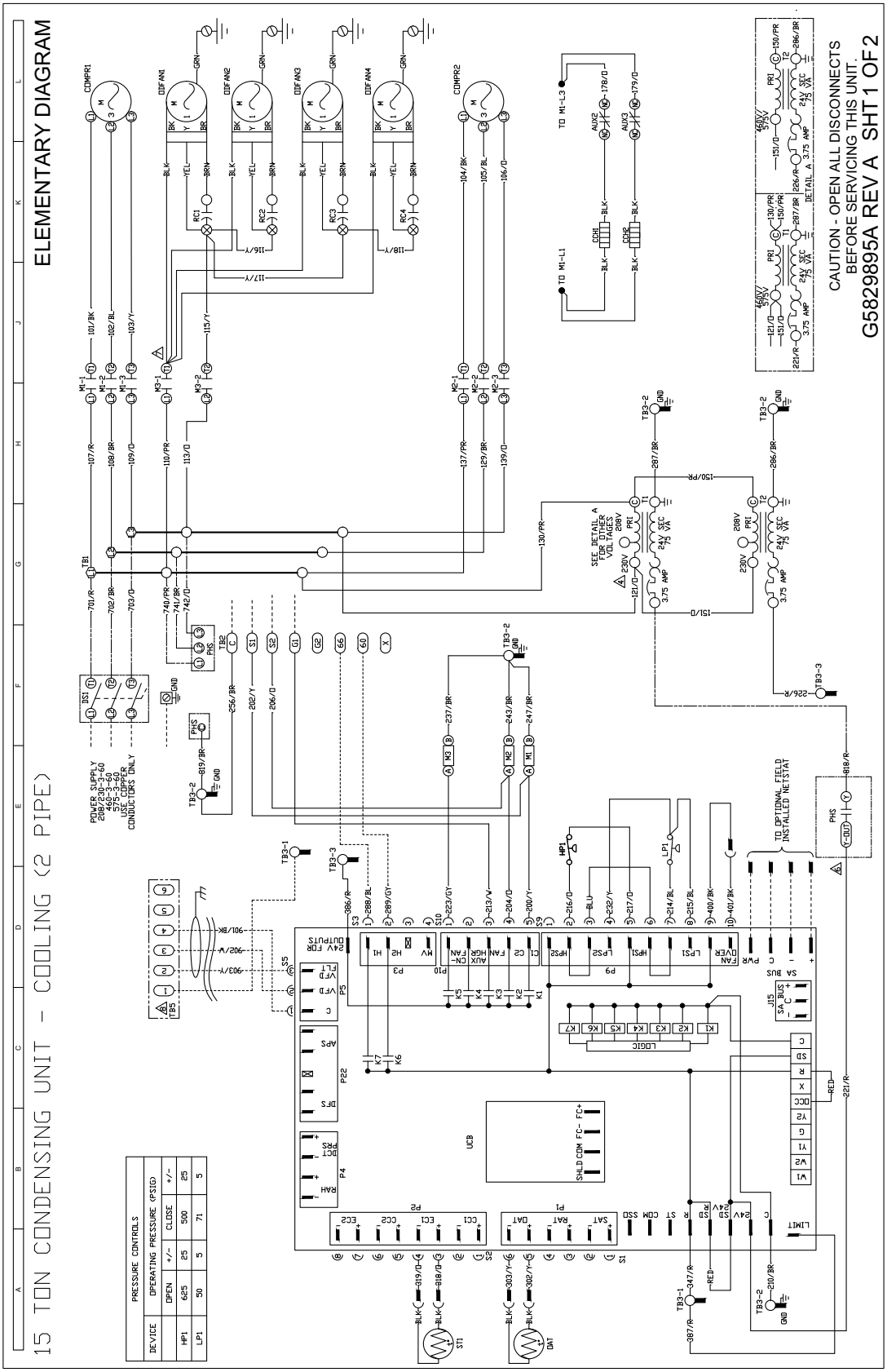

Typical YC240 Wiring Diagram

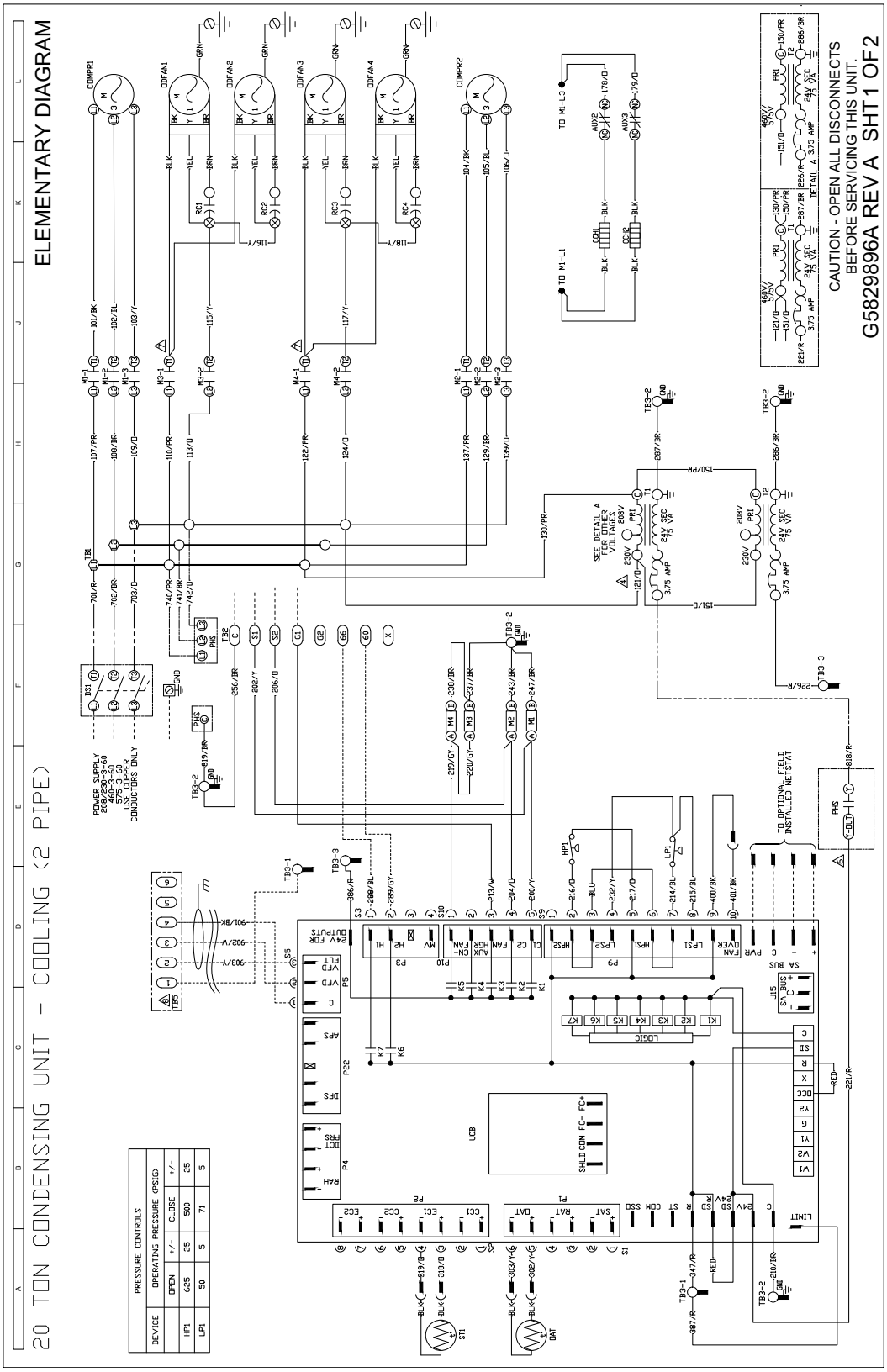

Typical YC300 Wiring Diagram

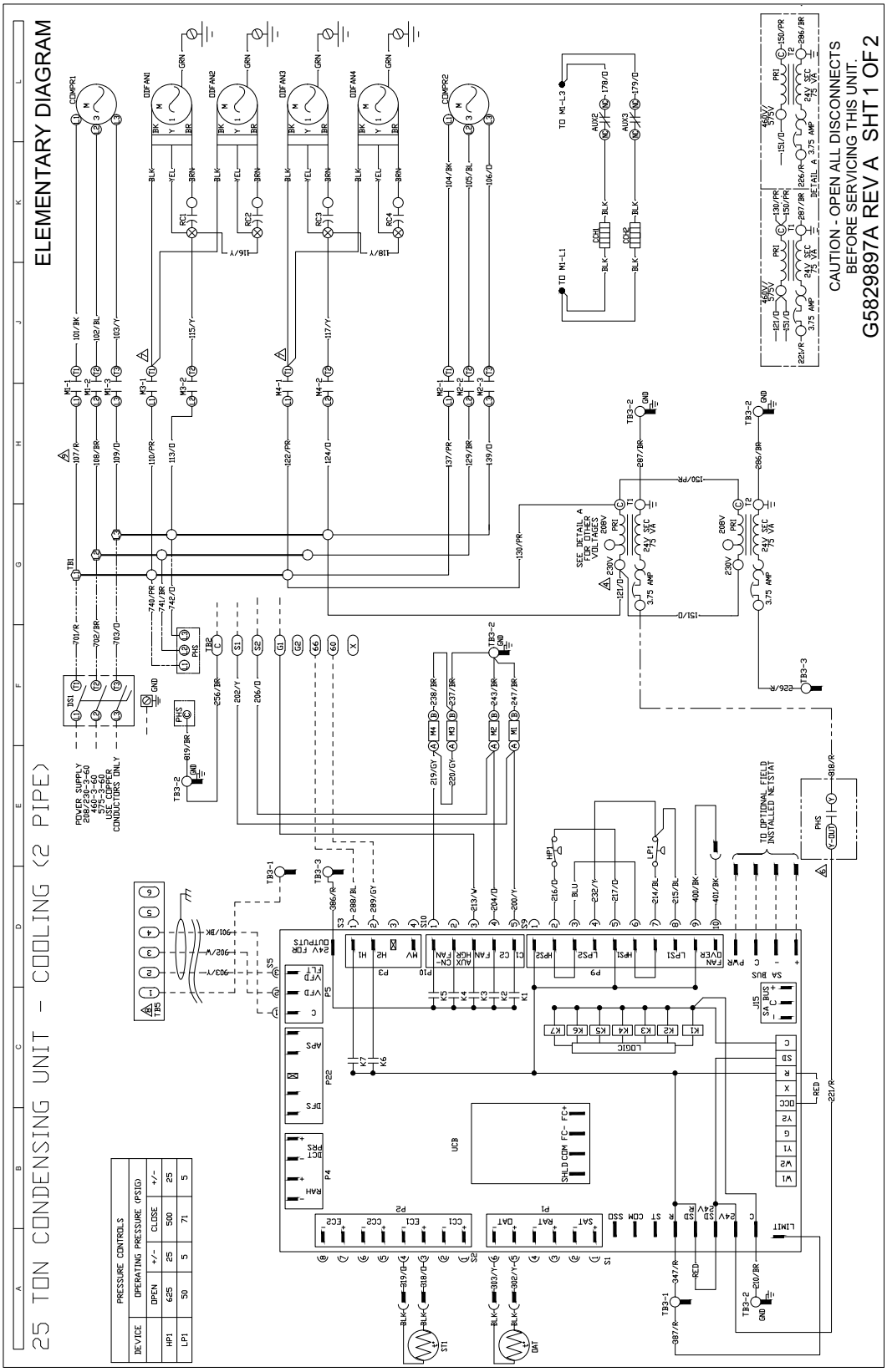

Typical YD180 - 240 Wiring Diagram

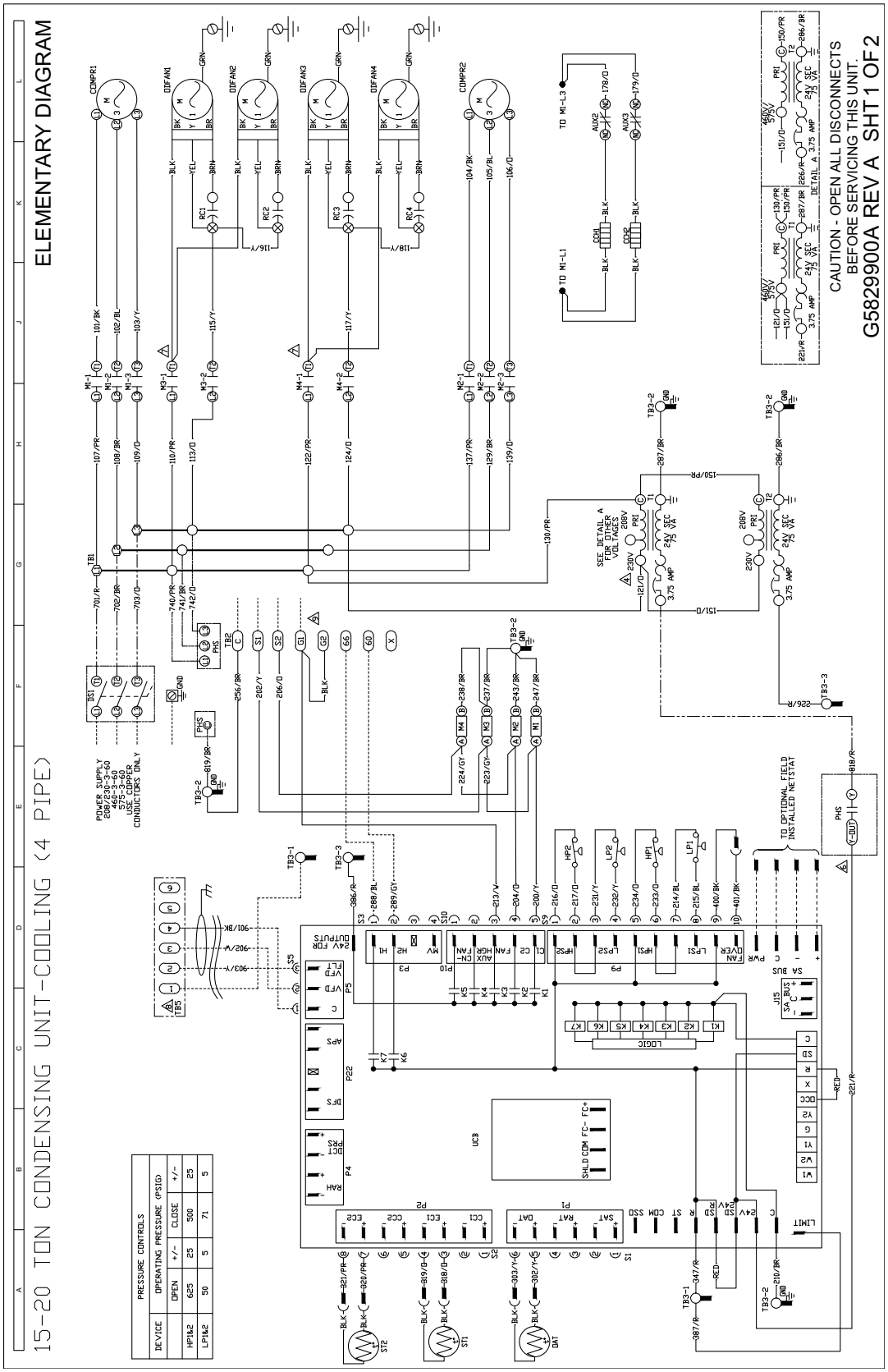

Heat Pump Units

Typical PC090 Wiring Diagram

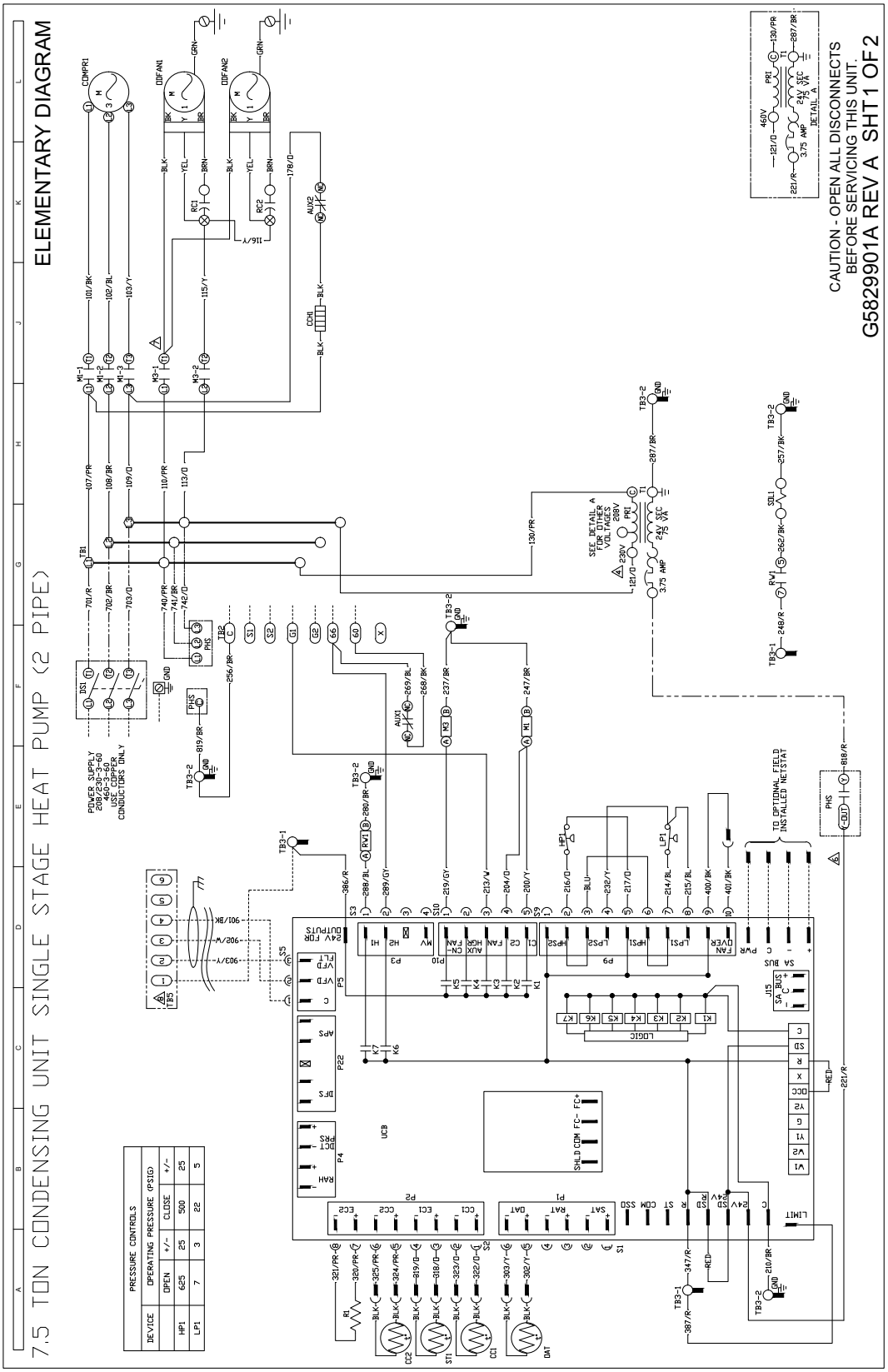

Typical PE090 Wiring Diagram

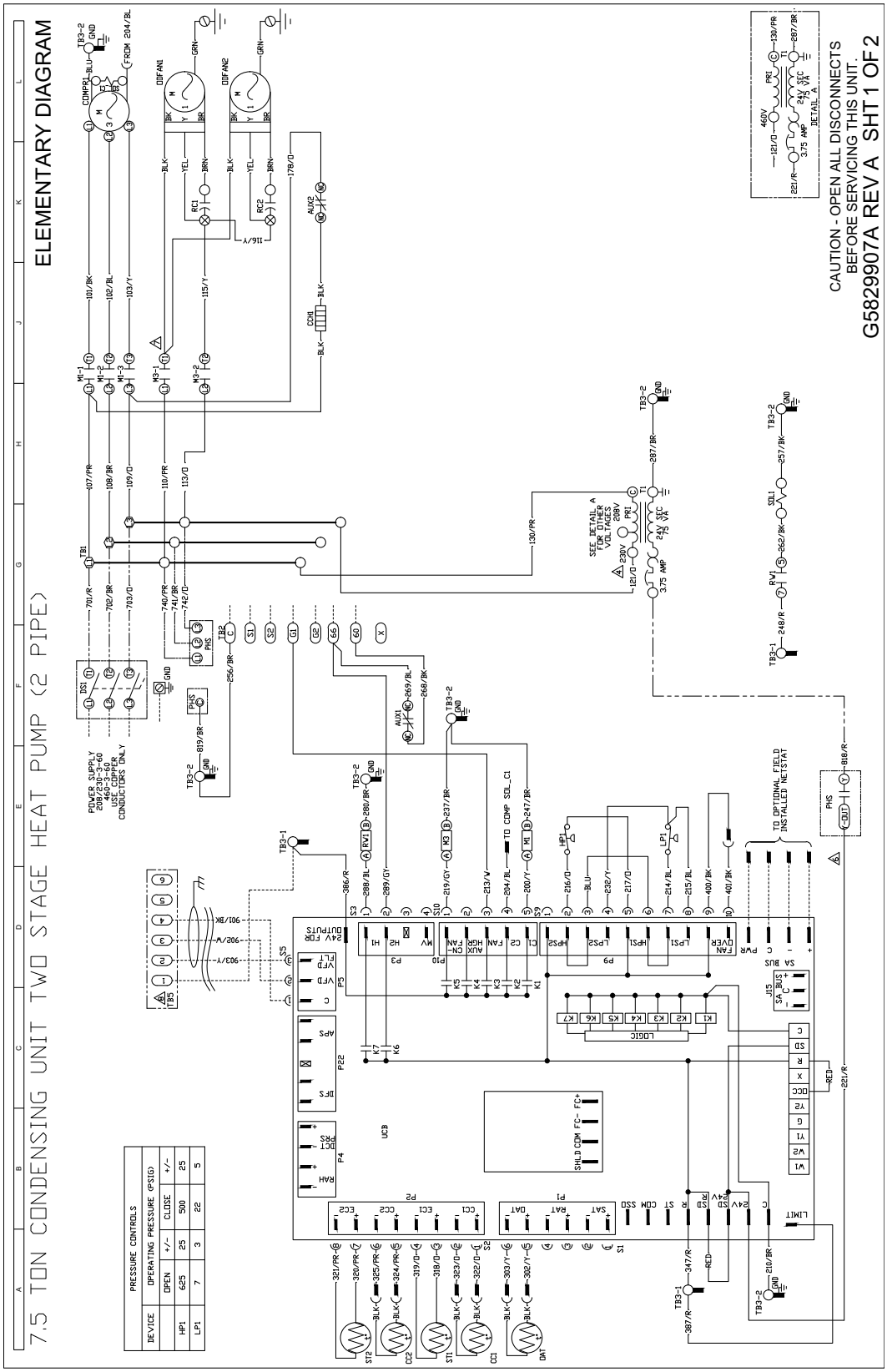

Typical PC120 Wiring Diagram

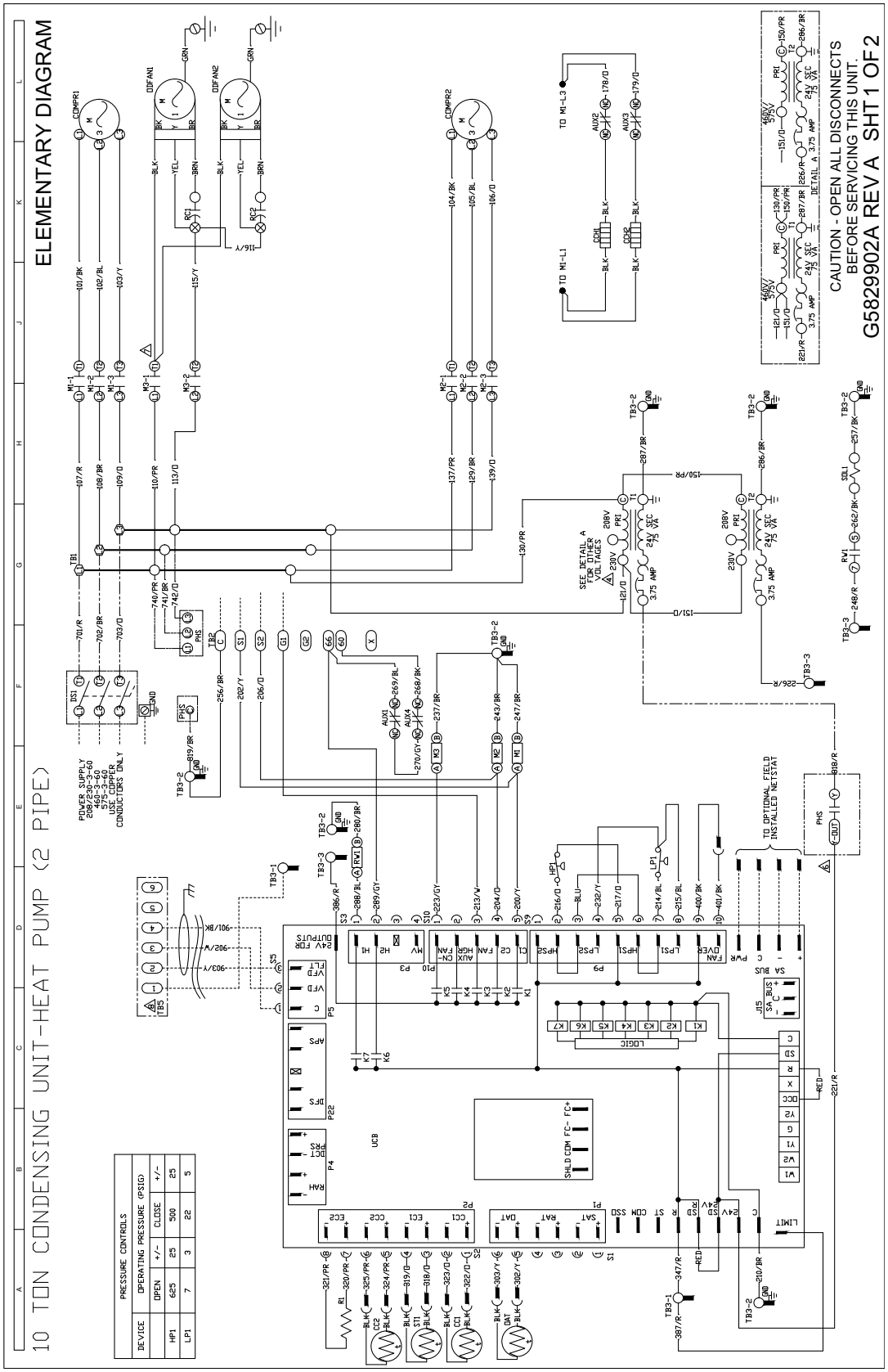

Typical PC180 Wiring Diagram

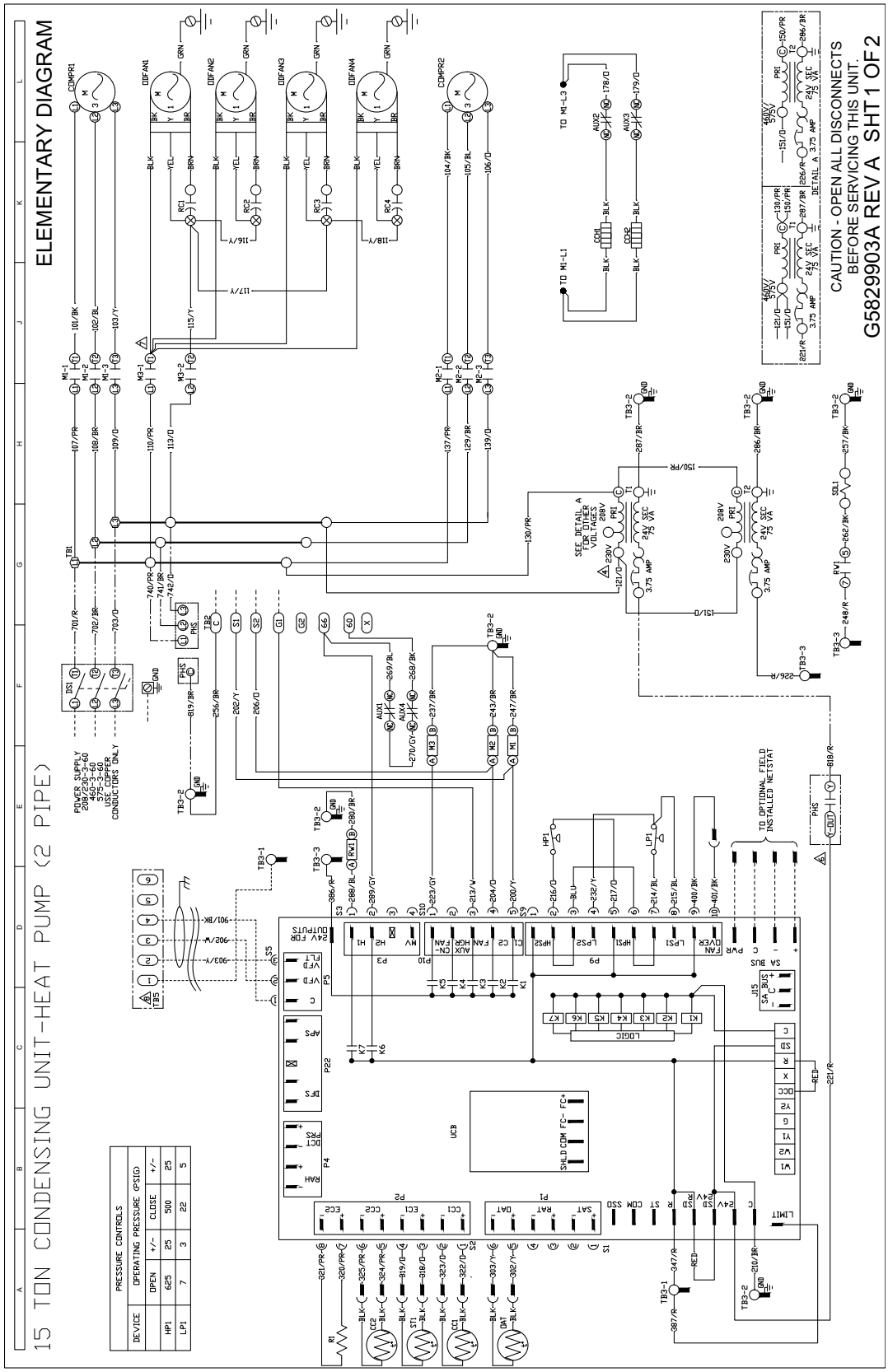

Typical PD180 - 240 Wiring Diagram

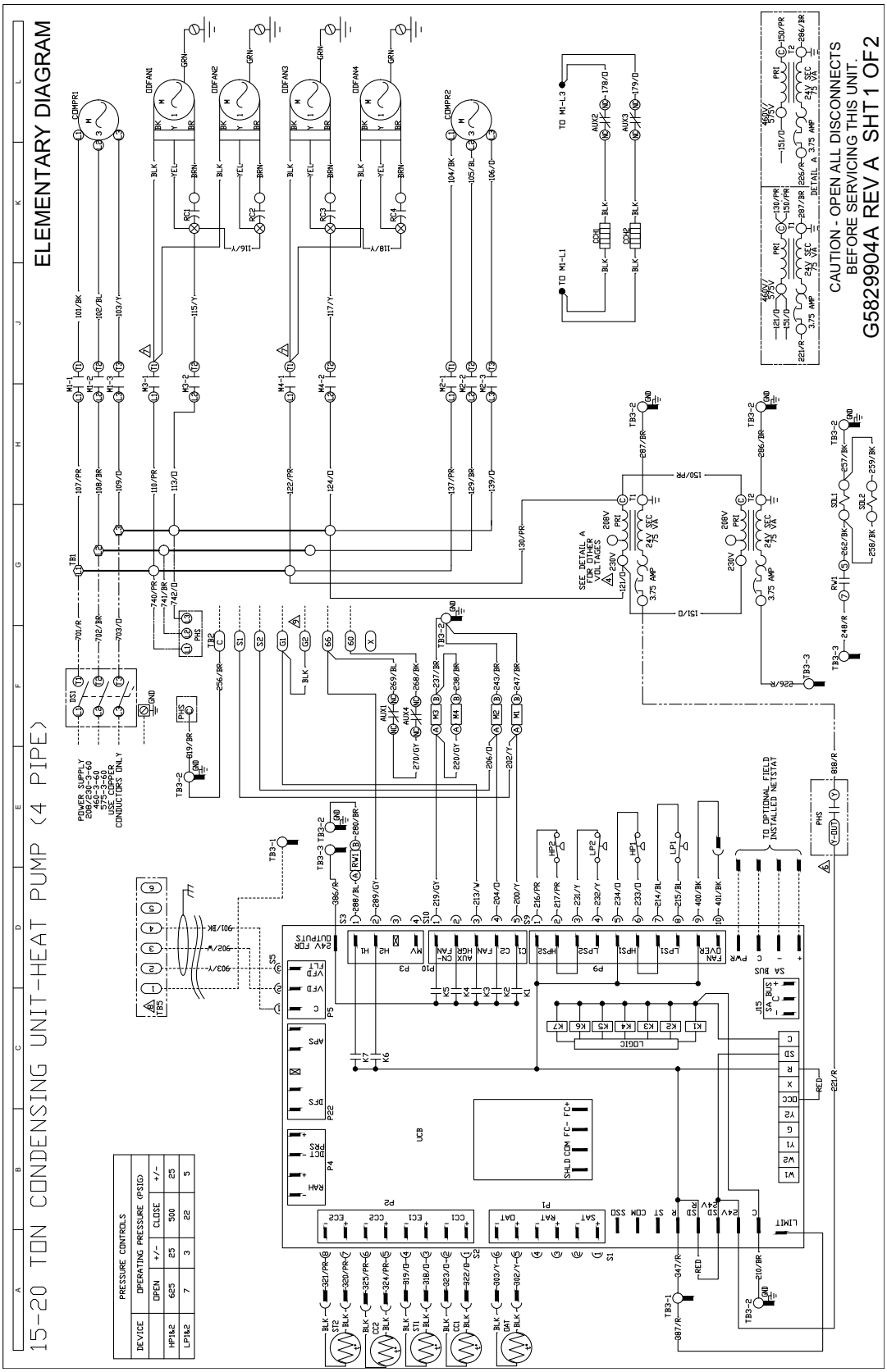

Typical YC300, Rawal 2 Pipe

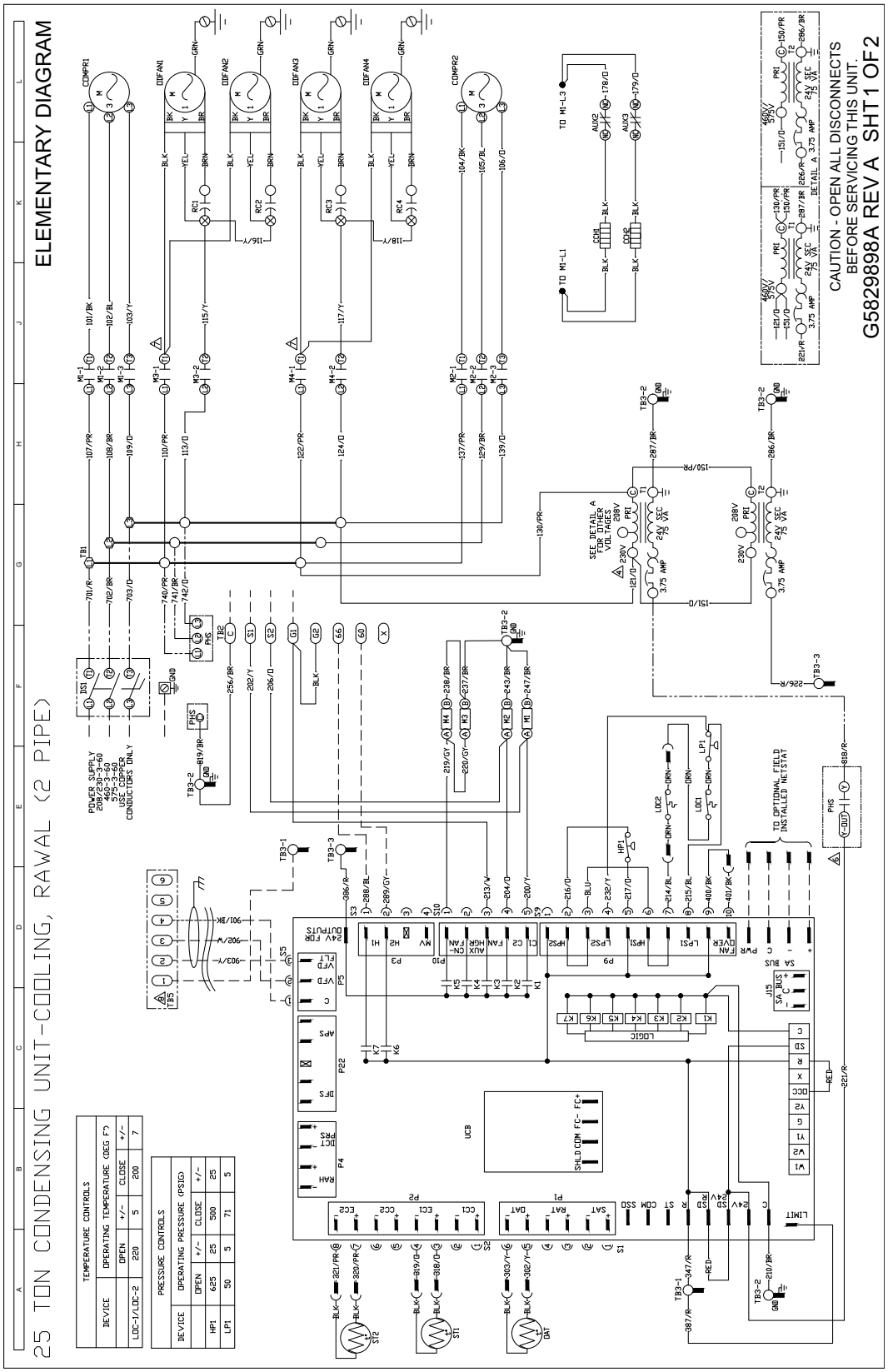

Component Map

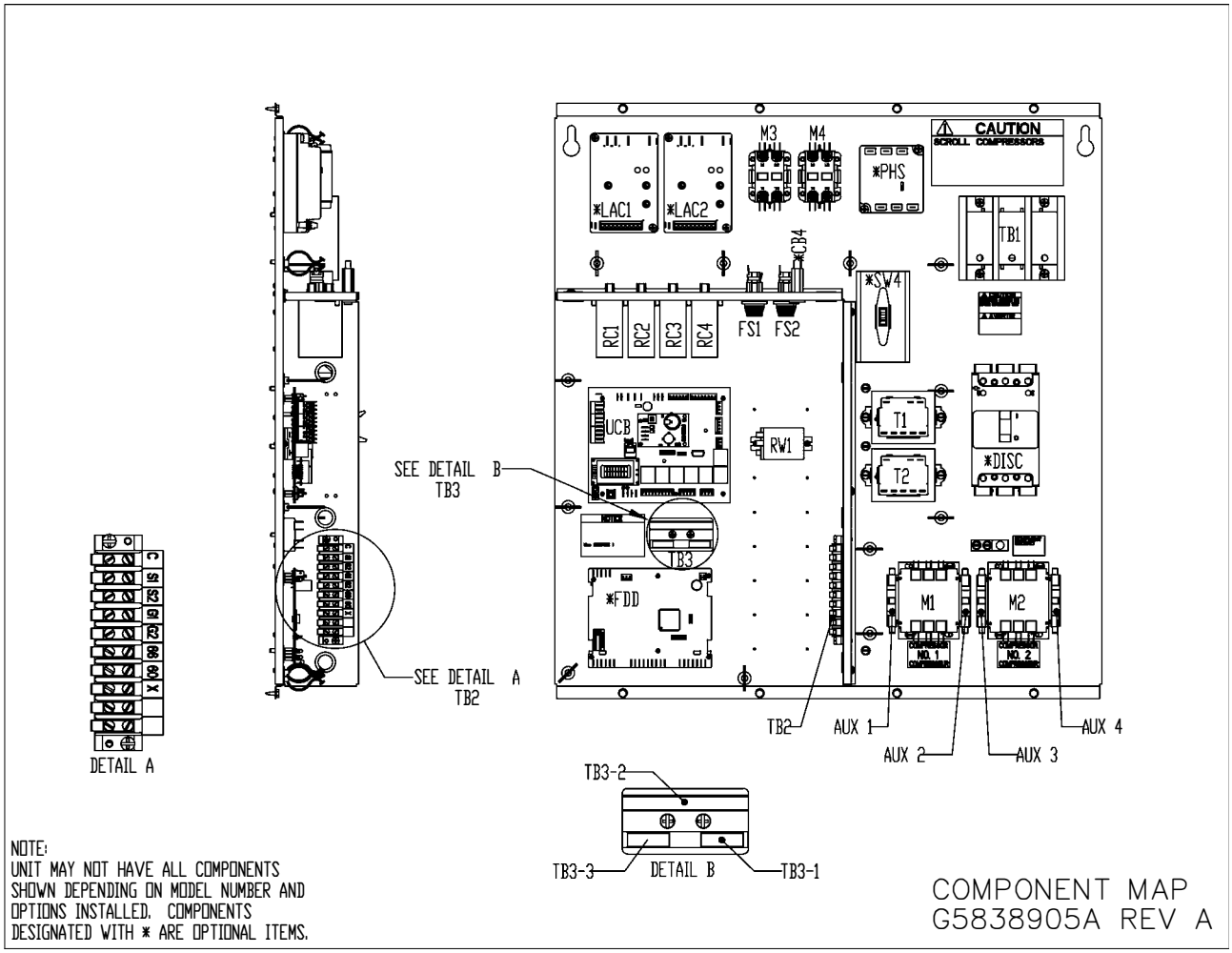

Air Handling Units

Typical NC090 Wiring Diagram

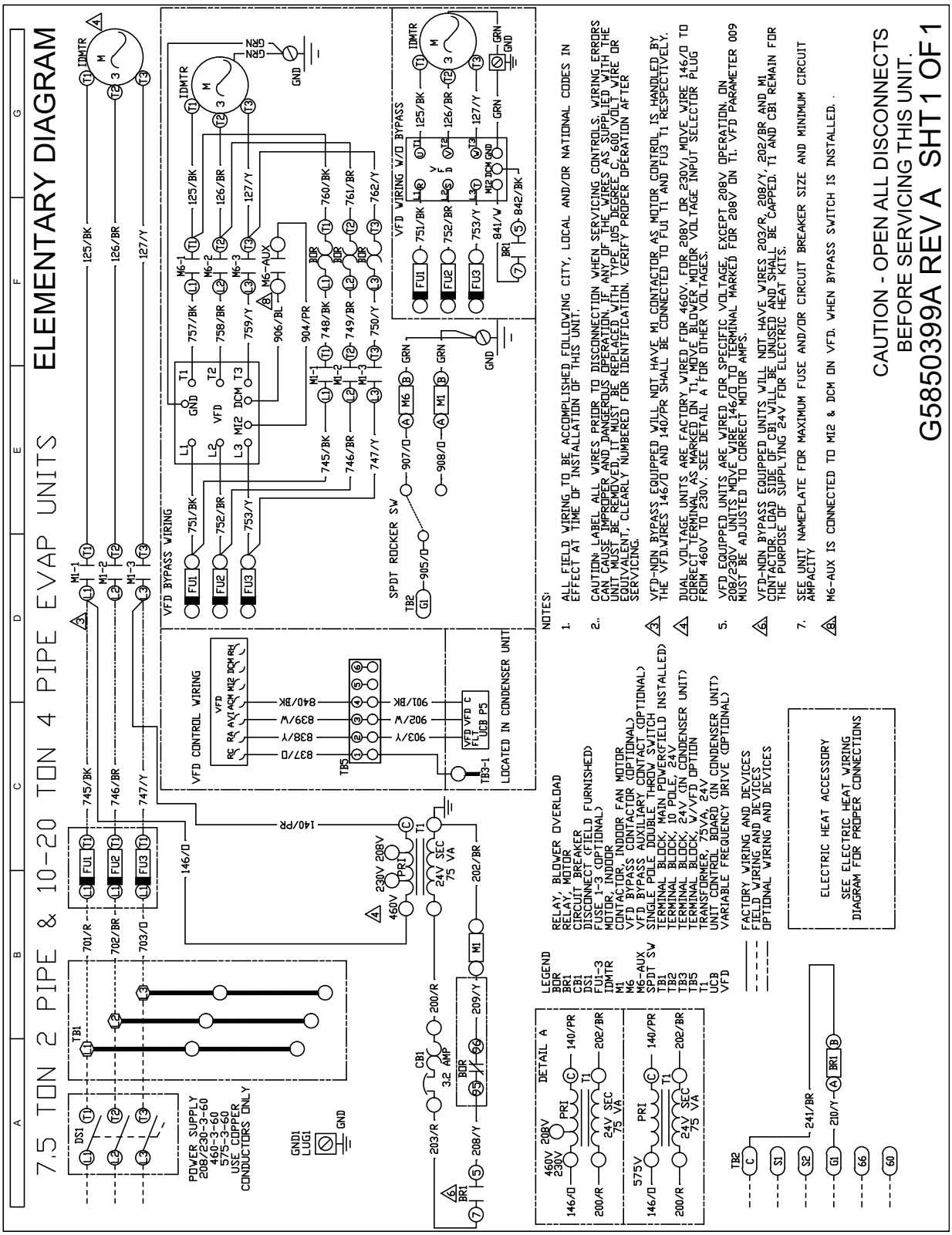

Typical NC120 thru 240, 1.5 thru 5 HP Blower Motor Only Wiring Diagram

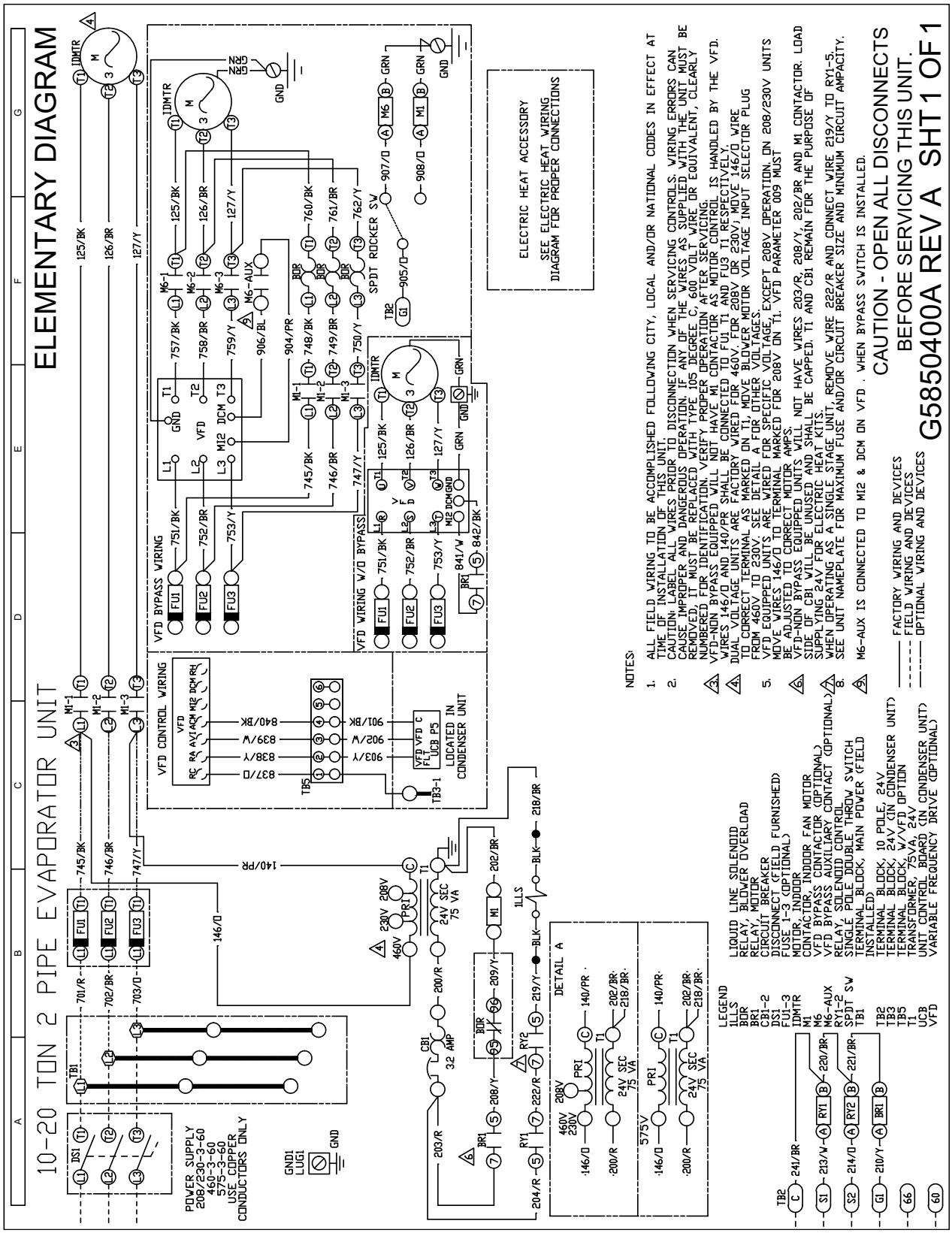

Typical NC 240, 7.5 HP Blower Motor 208/230 V Only Wiring Diagram

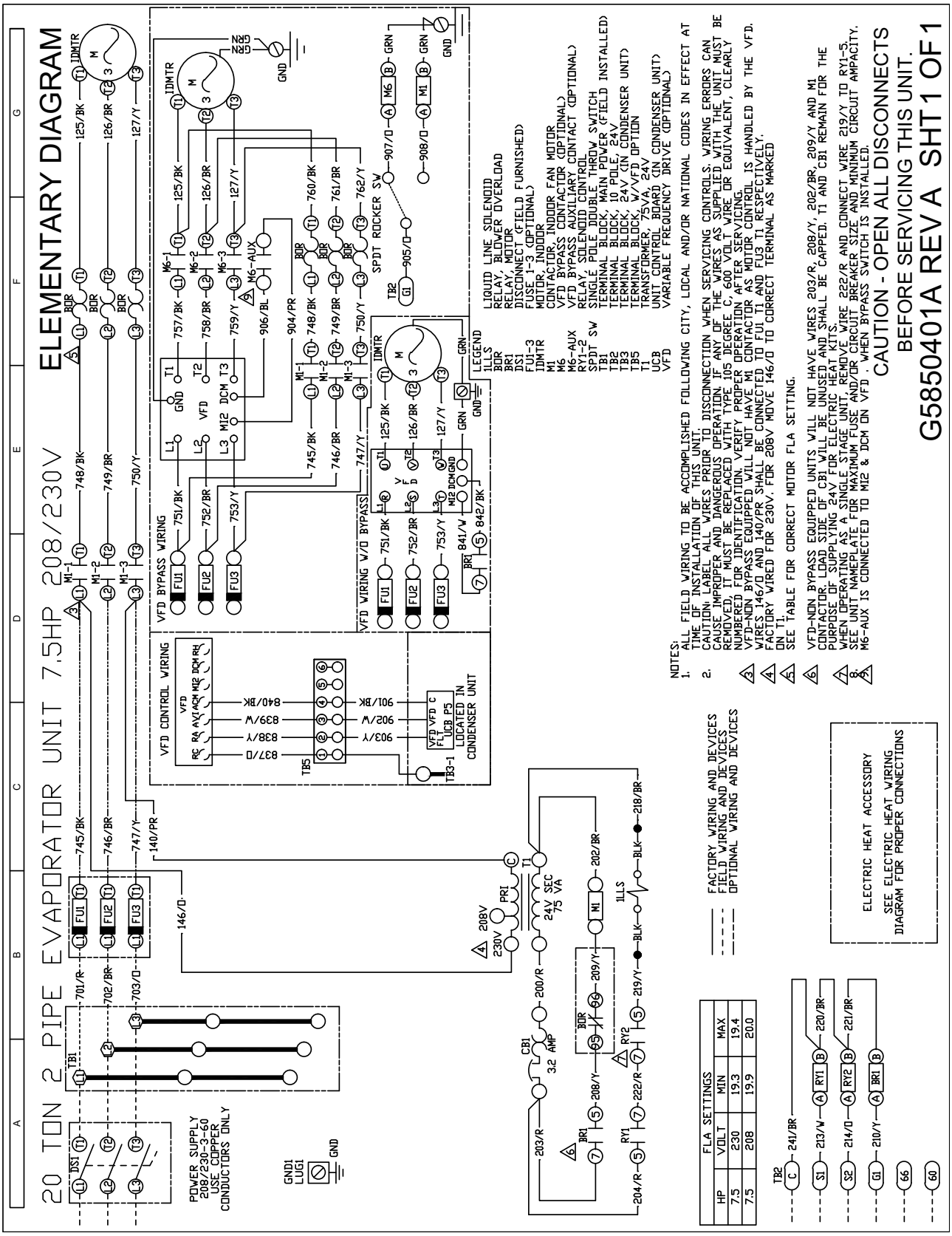

FLA SETTINGS			
HP	VOLT	MIN	MAX
7.5	230	19.3	19.4
7.5	208	19.9	20.0

Typical NC 240, 7.5 HP Blower Motor 460/575 V Only Wiring Diagram

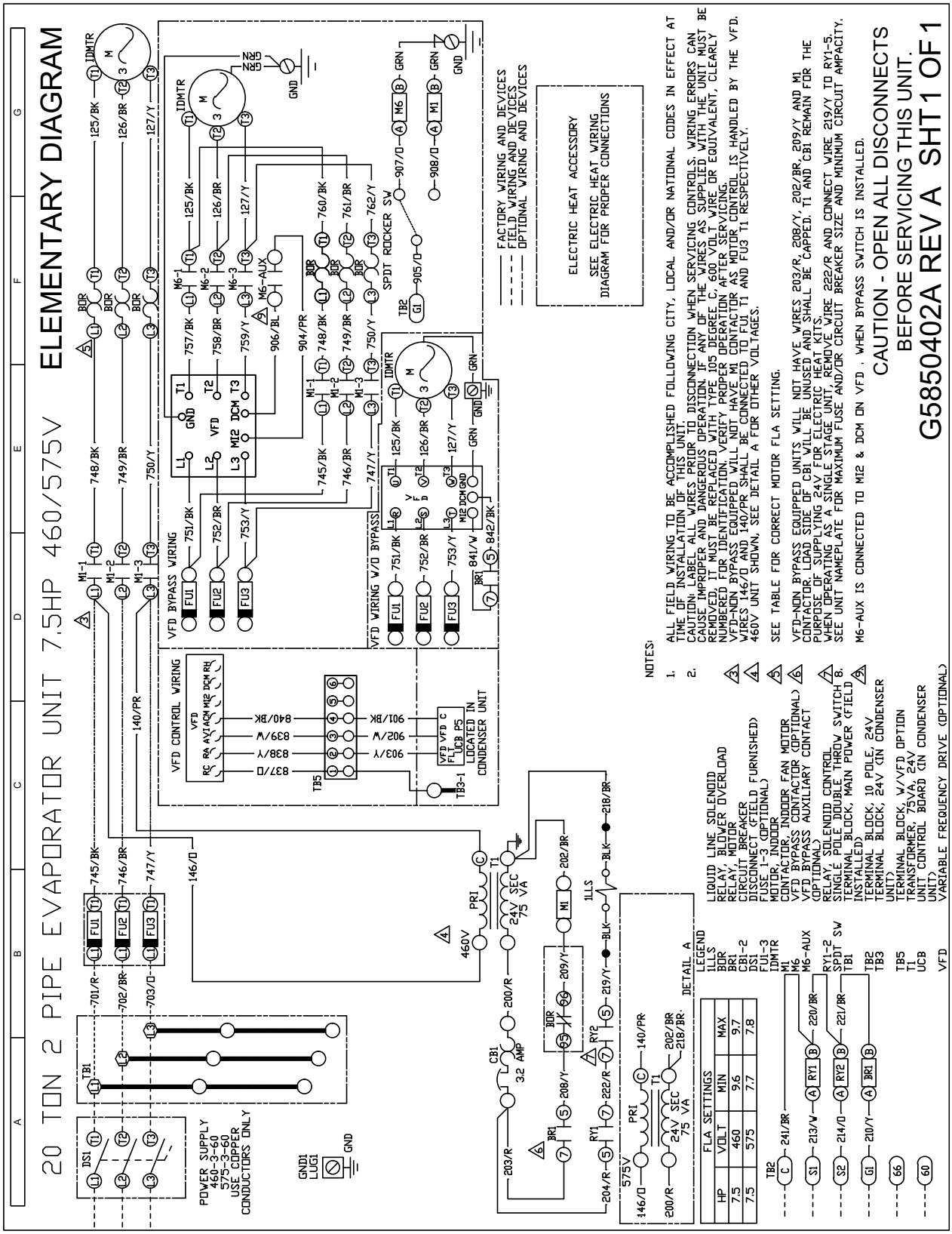

Typical NC300 Indoor Unit Wiring Diagram

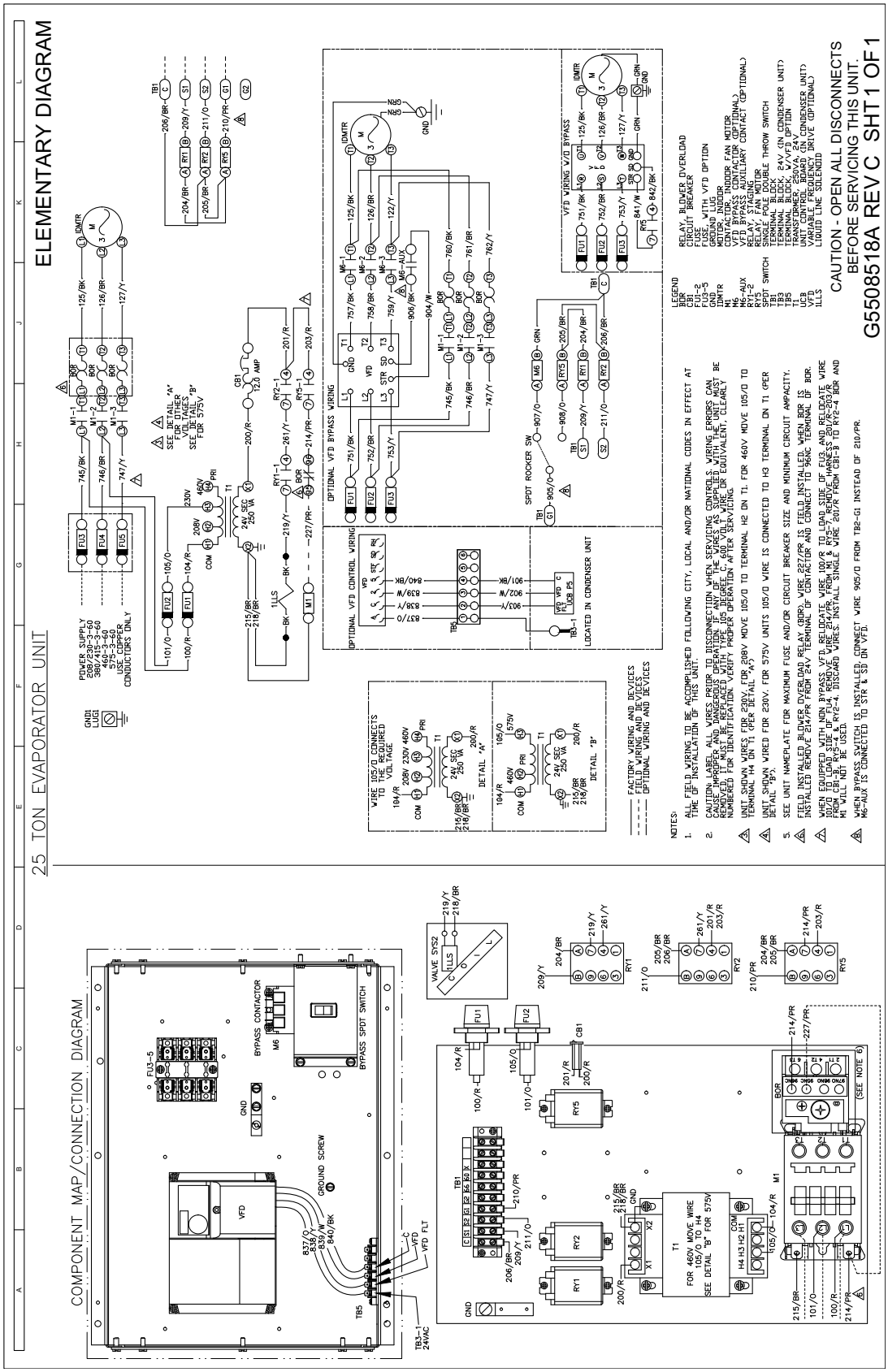

Typical ND 240, 7.5 HP Blower Motor 208/230 Volt Only Wiring Diagram

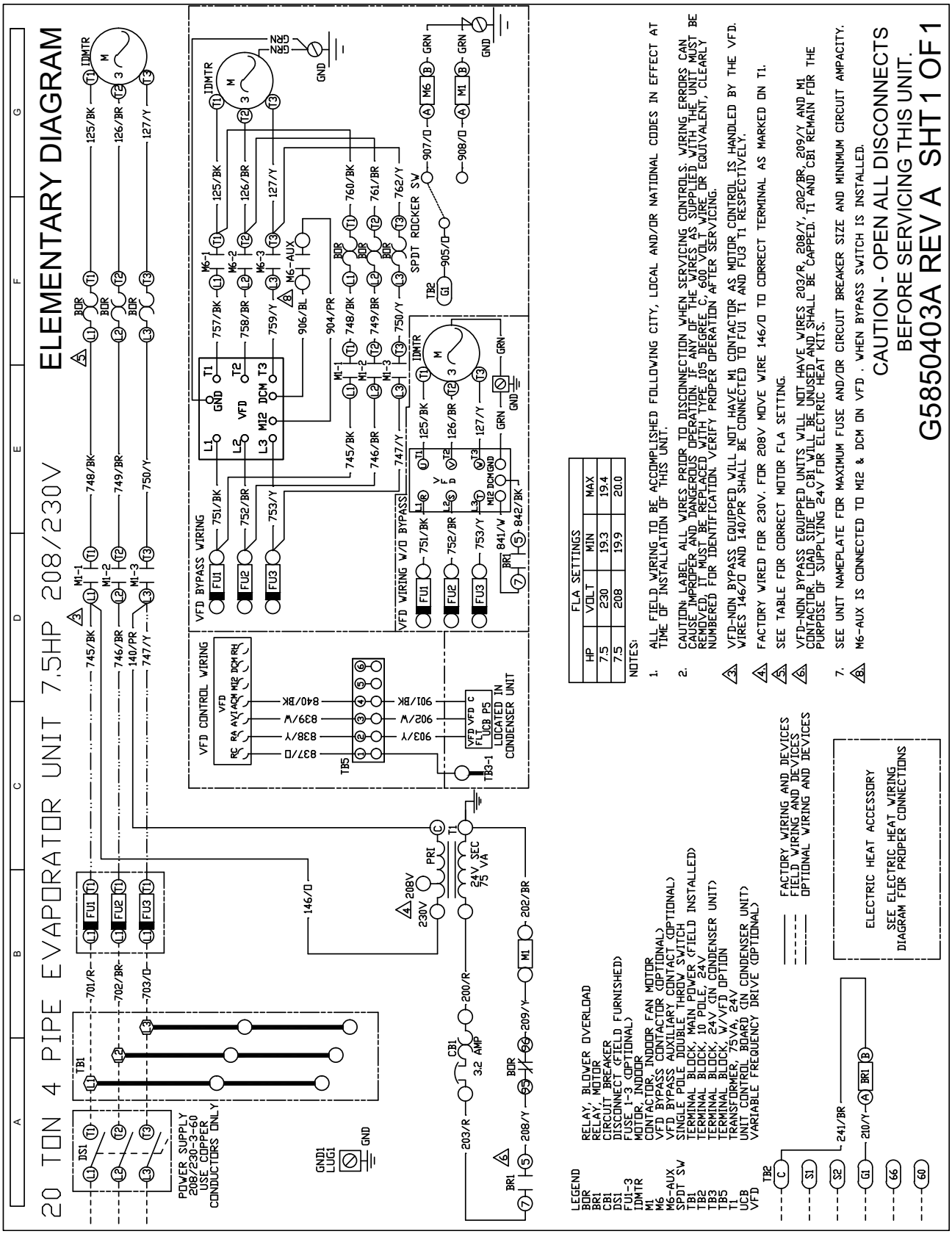

Typical ND 240, 7.5 HP Blower Motor 460/575 Volt Only Wiring Diagram

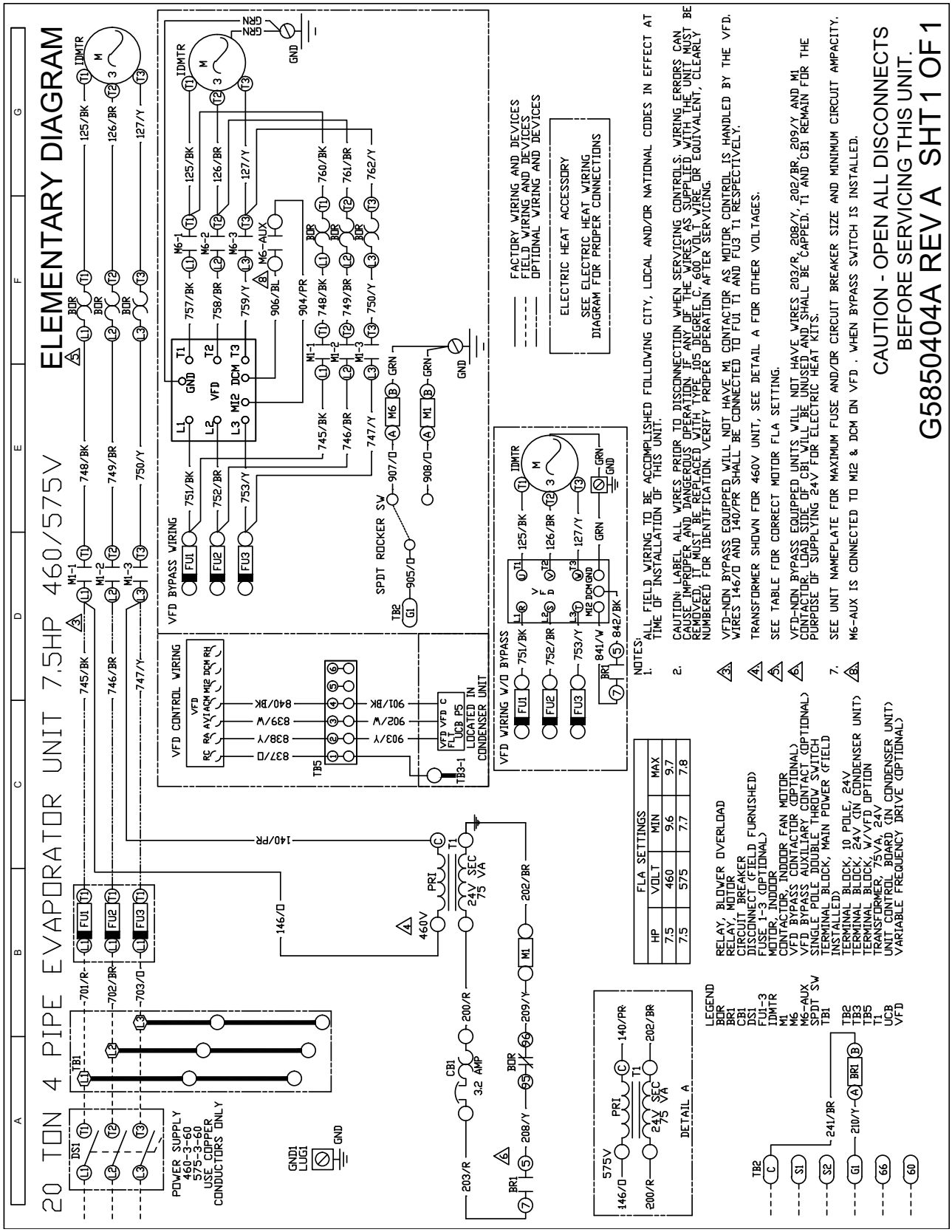

Weights And Dimensions

Corner Weights & Center of Gravity AC/HP Units

Model	Weight (lbs.)		Center of Gravity (in.)		4 Point Load Location (lbs.)			
	Shipping	Operating	X	Y	A	B	C	D
PC090	421	430	17.3	33	110	130	103	87
PE090	445	442	16.25	32.5	119.9	125.6	100.5	95.9
PC120	543	574	16.4	32.3	153	161	134	127
PC180	947	968	32.5	33	266	274	217	211
PD180	921	942	34	32.5	243	275	225	199
PD240	1090	1126	31.2	31.8	311	295	253	267
YC090	390	387	17	32.3	99	113	94	82
YE090	386	383	18	33.5	95.0	124.3	92.8	70.9
YC120	499	497	17.3	32.3	124	147	122	103
YD120	493	490	17.4	32.5	123	147	120	100
YC150	499	497	17	32.3	127	145	120	105
YD150	493	490	17.4	32.5	123	147	120	100
YC180	914	909	32.5	31.5	239	246	215	209
YD180	903	898	32.5	31.5	236	243	213	207
YC240	945	942	30.3	31	261	234	212	236
YD240	930	927	32.7	31.8	244	255	218	210
YC300	945	942	30.3	31	261	234	212	236

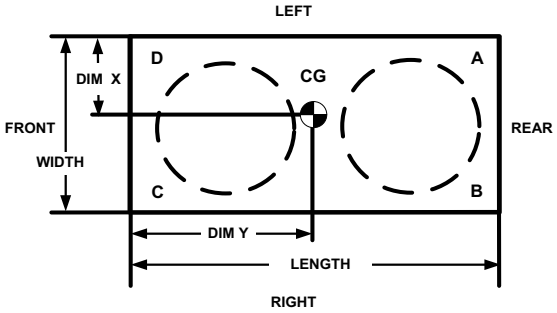

PC090, PE090, PC120
YC090, YE090, YC120, YD120
YC150, YD150

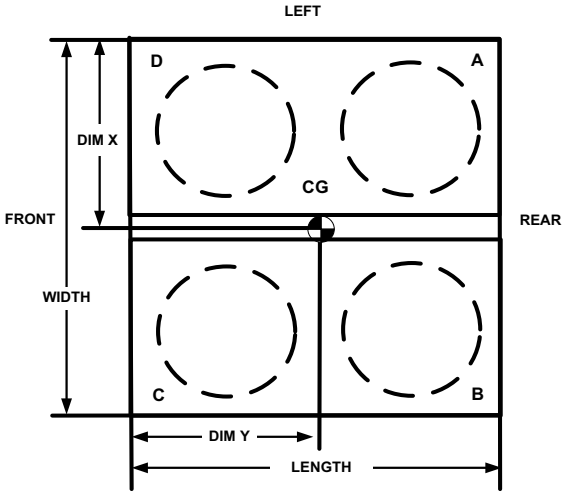

PC180, PD180,
PD240, YC180,
YD180, YC240,
YD240, YC300

Note: The front of the unit is considered the side with the unit control box.

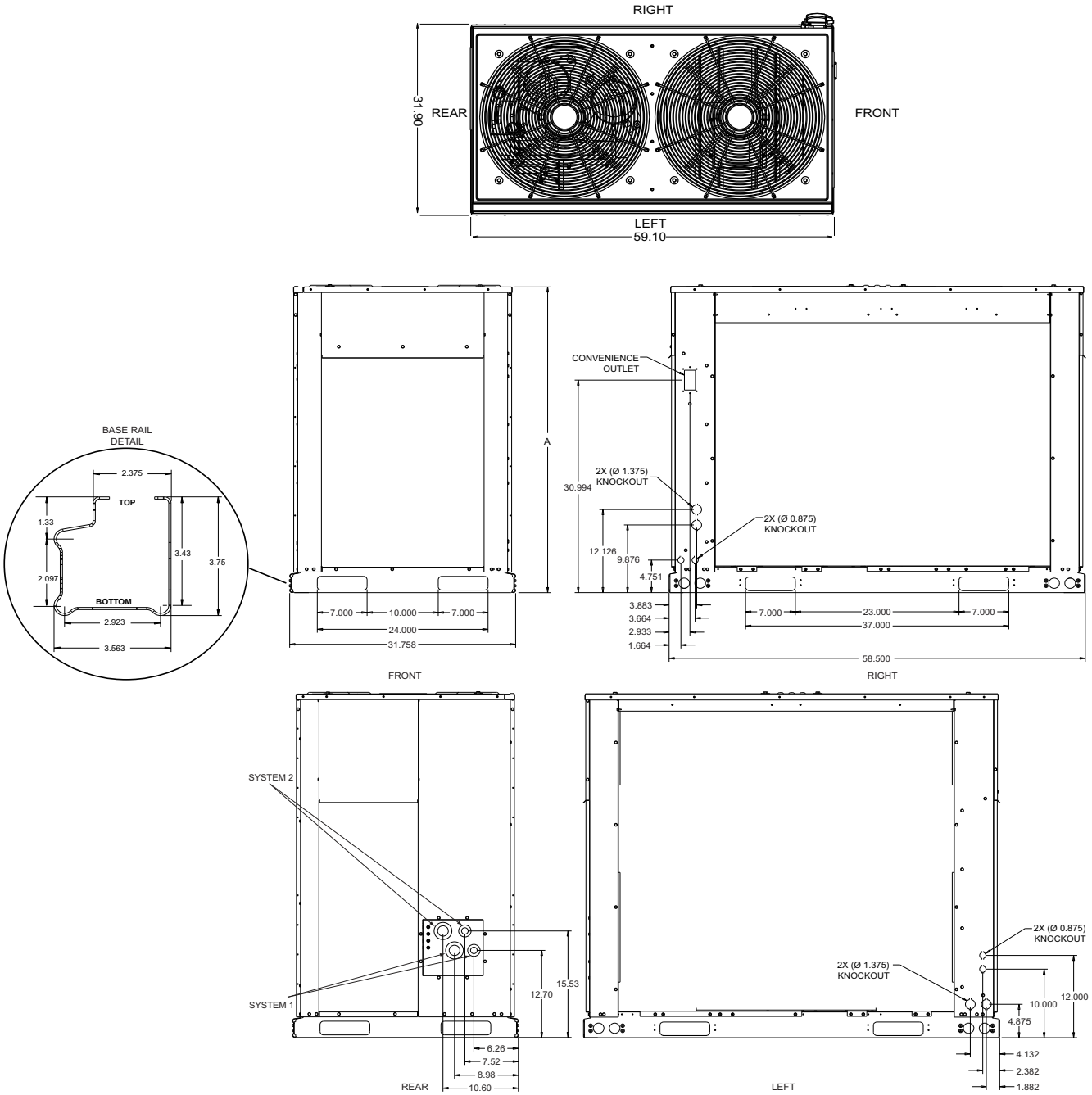

Unit Dimensions PC090, PE090, PC120, YC090, YE090, YC/YD120, YC/YD150

Unit Height Dimensions

MODEL	A
PC090	44.5
PE090	44.5
PC120	50.0
YC090	44.5
YE090	44.5
YC120	50.0
YD120	50.0
YC150	50.0
YD150	50.0

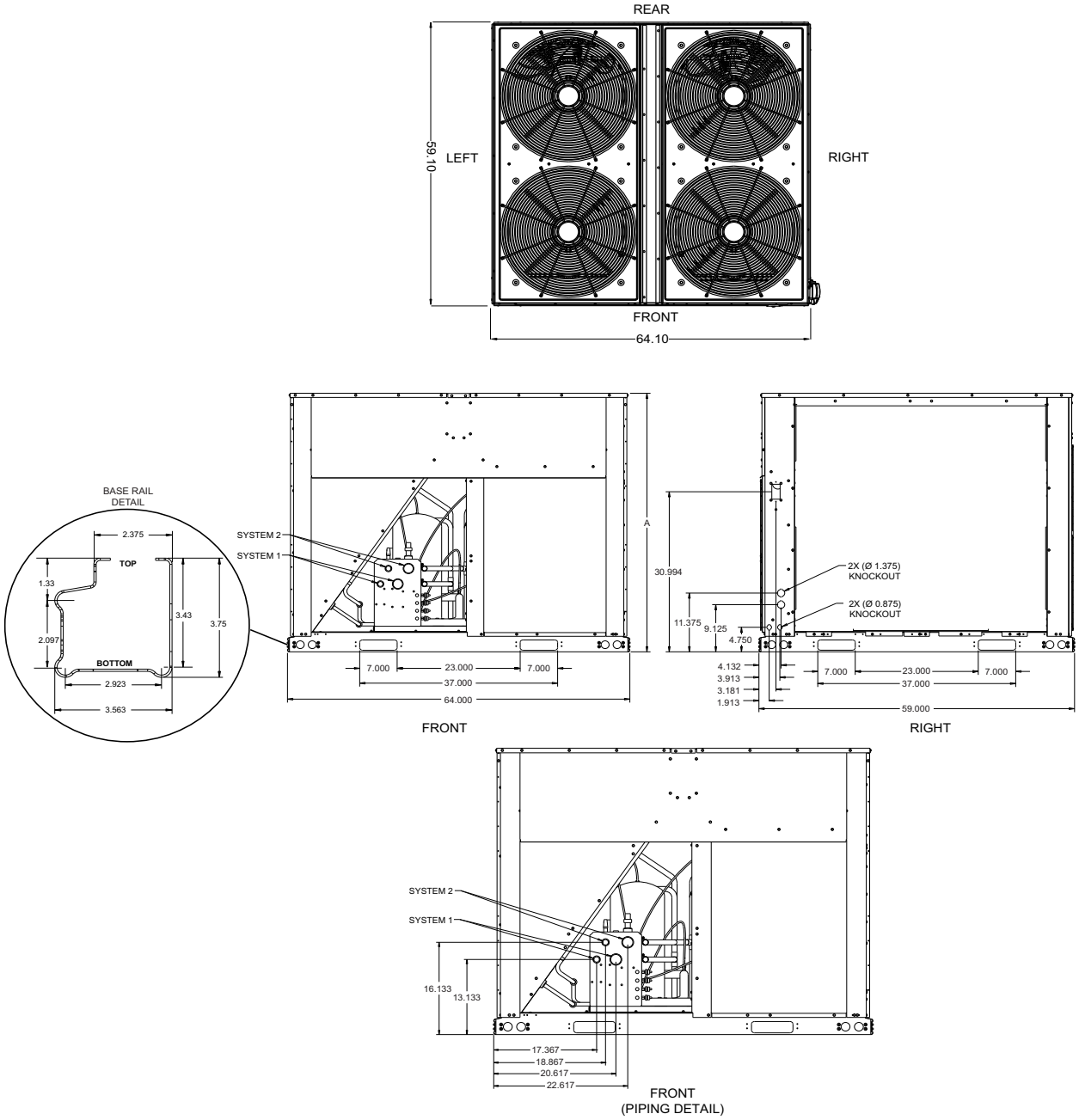

Unit Dimensions PC/PD180, PC/PD240, YC/YD180, YC/YD240

Piping And Electrical Connection Sizes (Inches)

Model	PC090	PE090	PC120	YC090	YE090	YC120	YD120	YC150	YD150
No. refrigeration circuits	1	1	1	1	1	1	2	1	2
Suction line OD (in.)	1 1/8	1 1/8	1 3/8	1 1/8	1 1/8	1 3/8	1 1/8	1 3/8	1 1/8
Liquid line OD (in.)	5/8	5/8	7/8	5/8	5/8	7/8	5/8	7/8	5/8
Power wiring knockout	1 3/8	1 3/8	1 3/8	1 3/8	1 3/8	1 3/8	1 3/8	1 3/8	1 3/8
Control wiring knockout	1 1/8	1 1/8	1 1/8	1 1/8	1 1/8	1 1/8	1 1/8	1 1/8	1 1/8

Model	PC180	PD180	PD240	YC180	YD180	YC240	YD240	YC300
No. refrigeration circuits	1	2	2	1	2	1	2	1
Suction line OD (in.)	1 5/8	1 3/8	1 3/8	1 5/8	1 1/8	1 5/8	1 3/8	1 5/8
Liquid line OD (in.)	7/8	5/8	5/8	7/8	5/8	7/8	5/8	7/8
Power wiring knockout	1 3/8	1 3/8	1 3/8	1 3/8	1 3/8	1 3/8	1 3/8	1 3/8
Control wiring knockout	7/8	7/8	7/8	7/8	7/8	7/8	7/8	7/8

Unit Height Dimensions

MODEL	A
PC180	44.5
PD180	44.5
PD240	50.0
YC180	44.5
YD180	44.5
YC240	50.0
YD240	50.0
YC300	50.0

PIPING AND ELECTRICAL CONNECTIONS

Piping connections are made from the rear of 7.5 thru 12.5 Ton units and the front of 15 thru 20 Ton units. Connections can be made directly to the suction and liquid line service valves.

With the piping connections being made at the rear of 7.5 thru 12.5 Ton units and the front of 15 thru 20 Ton units, the piping can be routed to the units from the left or right side.

Electrical connections for power and control wiring are made from the front of the units, right or left of 7.5 thru 12.5 Ton electrical control box access or left of the electrical control box access on 15 thru 20 Ton units. See Unit Dimensions and Piping and Electrical Connection Sizes tables for piping sizes and electrical knockout details.

Minimum Clearances

CLEARANCE DESCRIPTION	DISTANCE IN INCHES
Overhead (Top)	120
Front	36
Rear	24
Left side	30

Corner Weights & Center of Gravity NC/ND 090 Thru 240 Units

Model	Drive Options	Weight (lbs.)		Center of Gravity (in.)		4 Point Load Location (lbs.)				6 Point Load Location (lbs.)					
		Shipping	Operating	X	Y	A	B	C	D	A	B	C	D	E	F
	Vertical Airflow														
NC090	Std. Mtr. and Drv.	524	498	16.2	26.7	109	128	141	120	71	79	88	97	86	78
	High Static Mtr. and Drv.	526	500	16.2	26.7	110	129	142	120	71	79	88	97	87	78
NC120	Std. Mtr. and Drv.	562	539	15.5	26.8	125	134	146	136	82	86	90	98	94	89
	High Static Mtr. and Drv.	573	550	15.5	26.7	127	136	148	139	84	87	91	100	96	91
ND120	Std. Mtr. and Drv.	564	541	15.5	26.9	126	135	145	136	83	87	91	98	94	89
	High Static Mtr. and Drv.	575	552	15.5	26.9	128	137	148	138	84	88	92	100	95	91
NC180	Std. Mtr. and Drv.	769	737	18.0	34.4	155	185	216	181	101	113	127	148	131	117
	High Static Mtr. and Drv.	797	765	18.0	34.4	161	192	224	188	104	117	132	154	136	122
ND180	Std. Mtr. and Drv.	769	737	18.0	34.4	155	185	216	181	101	113	127	148	131	117
	High Static Mtr. and Drv.	797	765	18.0	34.4	161	192	224	188	104	117	132	154	136	122
NC240	Std. Mtr. and Drv.	908	873	15.8	42.6	179	198	260	235	118	125	134	176	165	154
	High Static Mtr. and Drv.	938	903	15.7	42.4	185	204	269	245	122	129	138	182	171	161
ND240	Std. Mtr. and Drv.	908	873	15.8	42.6	179	198	260	235	118	125	134	176	165	154
	High Static Mtr. and Drv.	938	903	15.7	42.4	185	204	269	245	122	129	138	182	171	161
	Horizontal Airflow														
NC090	Std. Mtr. and Drv.	524	498	30.1	26.7	118	119	131	130	79	79	79	87	87	87
	High Static Mtr. and Drv.	526	500	30.1	26.7	119	120	132	130	79	79	80	88	87	87
NC120	Std. Mtr. and Drv.	562	539	29.9	26.8	129	129	140	141	86	86	86	94	94	94
	High Static Mtr. and Drv.	573	550	30.2	26.7	130	132	145	142	87	87	88	97	96	95
ND120	Std. Mtr. and Drv.	564	541	29.9	26.9	131	130	140	141	87	87	86	93	94	94
	High Static Mtr. and Drv.	575	552	30.2	26.9	132	133	144	142	88	88	89	96	96	95
NC180	Std. Mtr. and Drv.	769	737	33.2	34.4	169	171	199	197	113	114	114	133	132	131
	High Static Mtr. and Drv.	797	765	33.8	34.4	172	181	211	201	114	118	122	142	137	133
ND180	Std. Mtr. and Drv.	769	737	33.2	34.4	169	171	199	197	113	114	114	133	132	131
	High Static Mtr. and Drv.	797	765	33.8	34.4	172	181	211	201	114	118	122	142	137	133
NC240	Std. Mtr. and Drv.	908	873	30.1	42.6	188	189	249	247	125	126	126	166	165	164
	High Static Mtr. and Drv.	938	903	30.6	42.4	191	198	262	252	126	130	133	176	171	167
ND240	Std. Mtr. and Drv.	908	873	30.1	42.6	188	189	249	247	125	126	126	166	165	164
	High Static Mtr. and Drv.	938	903	30.6	42.4	191	198	262	252	126	130	133	176	171	167

Corner Weights & Center of Gravity NL/NM 090 Thru 240 Units

Model	Drive Option	Shipping Wt (lb)	Operating Wt (lb)	Center of Gravity		4 point Load Location (lb)				6 point Load Location (lb)					
				CG X	CG Y	A	B	C	D	A	B	C	D	E	F
	Vertical Airflow														
NL090	Std. Mtr. and Drv.	542	516	16.2	26.5	113	132	146	125	73	81	90	100	90	81
	High Static Mtr. and Drv.	549	523	16.2	26.5	114	133	148	127	74	82	91	102	91	83
NL120	Std. Mtr. and Drv.	586	563	15.4	26.6	130	138	152	143	86	89	93	102	98	95
	High Static Mtr. and Drv.	597	574	15.4	26.6	132	140	155	146	87	91	94	104	100	97
NM120	Std. Mtr. and Drv.	588	565	15.4	26.8	131	139	152	143	87	90	94	102	98	94
	High Static Mtr. and Drv.	599	576	15.4	26.8	133	141	155	146	88	92	95	104	100	96
NL180	Std. Mtr. and Drv.	794	762	17.9	34.3	161	191	223	188	104	116	131	153	136	122
	High Static Mtr. and Drv.	820	788	17.9	34.3	166	197	231	195	108	120	135	158	141	126
NM180	Std. Mtr. and Drv.	794	762	17.9	34.3	161	191	223	188	104	116	131	153	136	122
	High Static Mtr. and Drv.	820	788	17.9	34.3	166	197	231	195	108	120	135	158	141	126
NL240	Std. Mtr. and Drv.	932	897	15.7	42.4	184	202	267	244	121	128	136	180	170	160
	High Static Mtr. and Drv.	963	928	15.6	42.3	191	207	276	254	125	132	140	187	176	167
NM240	Std. Mtr. and Drv.	932	897	15.7	42.4	184	202	267	244	121	128	136	180	170	160
	High Static Mtr. and Drv.	963	928	15.6	42.3	191	207	276	254	125	132	140	187	176	167
	Horizontal Airflow														
NL090	Std. Mtr. and Drv.	542	516	30.6	26.5	120	125	138	133	79	82	84	93	91	88
	High Static Mtr. and Drv.	549	523	30.8	26.5	121	127	141	134	80	83	86	95	92	89
NL120	Std. Mtr. and Drv.	586	563	30.5	26.6	132	136	150	145	87	89	91	101	98	96
	High Static Mtr. and Drv.	597	574	30.8	26.6	133	140	155	147	88	91	94	104	100	97
NM120	Std. Mtr. and Drv.	588	565	30.5	26.8	133	137	150	145	88	90	92	100	98	96
	High Static Mtr. and Drv.	599	576	30.7	26.8	134	141	154	147	89	92	95	104	100	97
NL180	Std. Mtr. and Drv.	794	762	33.7	34.3	172	179	210	201	114	117	121	141	137	133
	High Static Mtr. and Drv.	820	788	34.3	34.3	174	189	221	204	115	121	127	149	142	135
NM180	Std. Mtr. and Drv.	794	762	33.7	34.3	172	179	210	201	114	117	121	141	137	133
	High Static Mtr. and Drv.	820	788	34.3	34.3	174	189	221	204	115	121	127	149	142	135
NL240	Std. Mtr. and Drv.	932	897	30.5	42.4	190	196	259	251	126	129	131	174	170	167
	High Static Mtr. and Drv.	963	928	30.9	42.3	193	205	273	257	127	133	138	184	176	169
NM240	Std. Mtr. and Drv.	932	897	30.5	42.4	190	196	259	251	126	129	131	174	170	167
	High Static Mtr. and Drv.	963	928	30.9	42.3	193	205	273	257	127	133	138	184	176	169

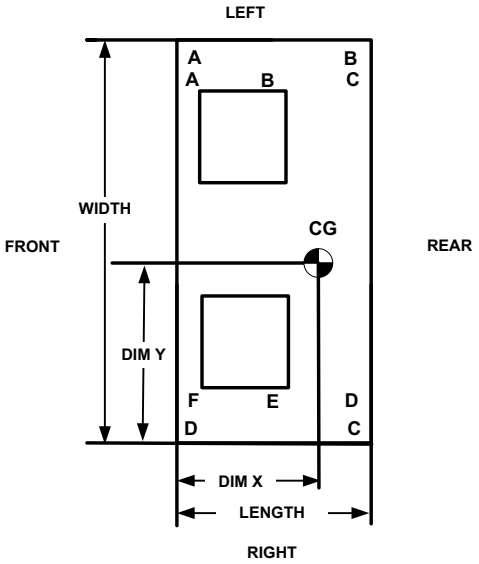

VERTICAL POSITION

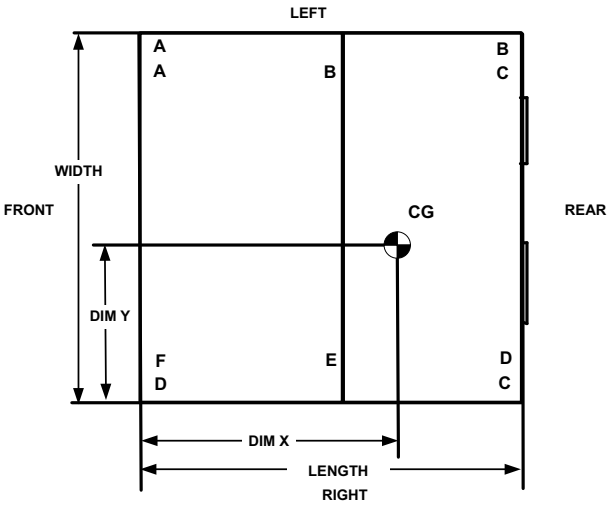

HORIZONTAL POSITION

Corner Weights & Center of Gravity NC300 Unit

Model	Drive HP	Evaporator Section	Blower Section	Drive Section	Weight (lbs.)		Center of Gravity		4 Point Load Location (lbs.)				6 Point Load Location (lbs.)					
		Cabinet Wt (lb)	Cabinet Wt (lb)	Cabinet Wt (lb)	Ship ping	Opera ting	CG X	CG Y	A	B	C	D	A	B	C	D	E	F
Vertical Airflow																		
NC300	5	539	463	111	1067	1130	19.0	45.5	296	321	267	247	204	220	194	172	159	180
	7.5	539	463	138	1067	1157	19.3	45.1	301	335	274	246	206	229	202	179	161	181
Horizontal Airflow																		
NC300	5	539	463	111	1067	1130	35.2	45.5	320	297	247	266	220	204	180	160	172	194
	7.5	539	463	137.8	1067	1157	35.4	45.1	329	307	252	269	225	210	185	164	176	198
Vertical Airflow With VFD & Intellispeed																		
NC300	5	539	491	111	1067	1158	19.0	45.4	304	329	273	253	209	226	199	176	163	184
	7.5	539	493	138	1067	1187	19.3	45.1	309	344	281	253	211	235	207	183	165	186
Horizontal Airflow With VFD & Intellispeed																		
NC300	5	539	491	111	1067	1158	35.7	45.4	324	308	256	269	223	212	187	166	174	196
	7.5	539	493	137.8	1067	1187	35.9	45.1	333	320	262	272	227	218	192	171	178	200

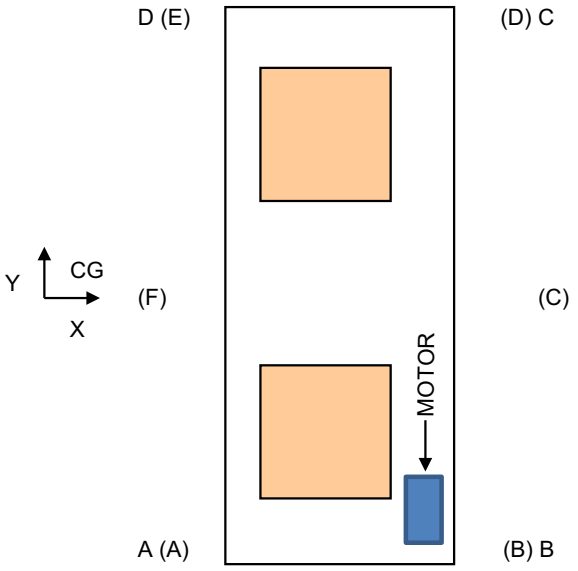

Vertical

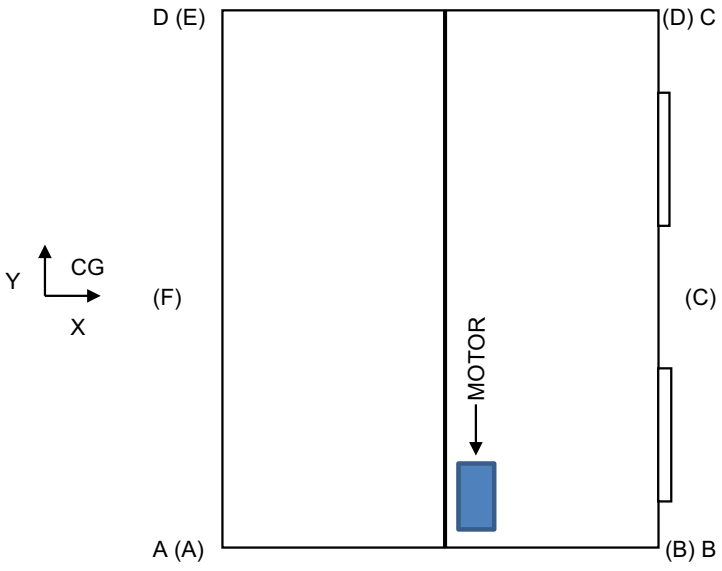

Horizontal

TOP VIEW

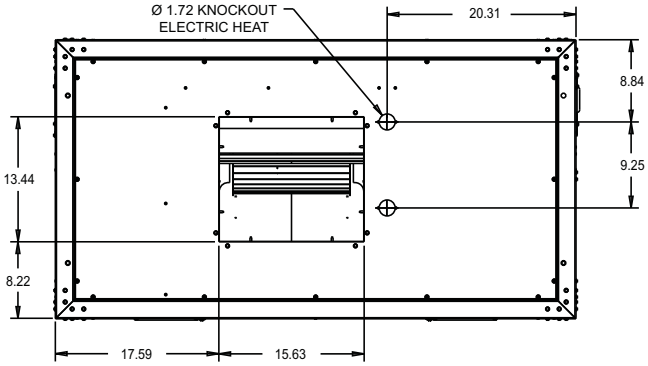

TOP VIEW - BLOWER OUTLET
7.5 TON INDOOR

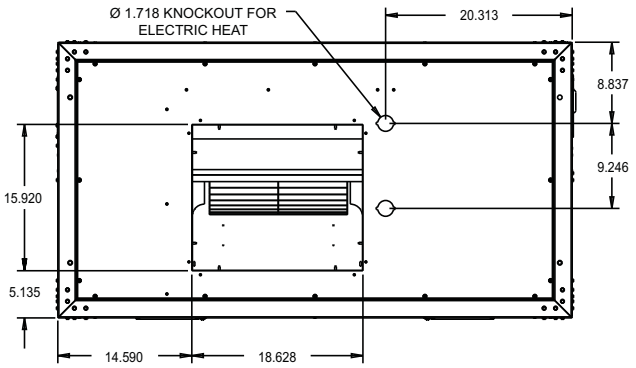

TOP VIEW - BLOWER OUTLET
10 TON INDOOR

FRONT AND SIDE VIEW

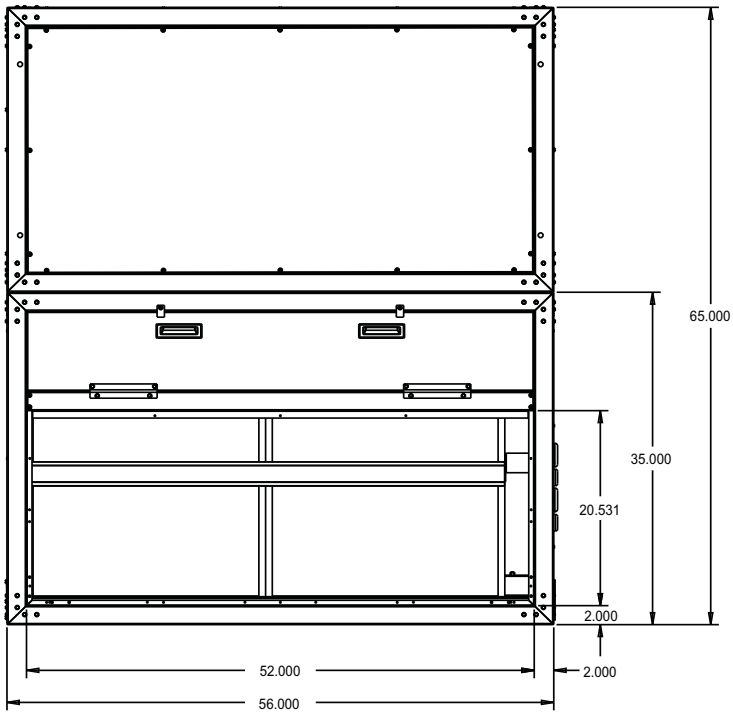

FRONT VIEW - RETURN AIR
7.5 - 10 TON INDOOR

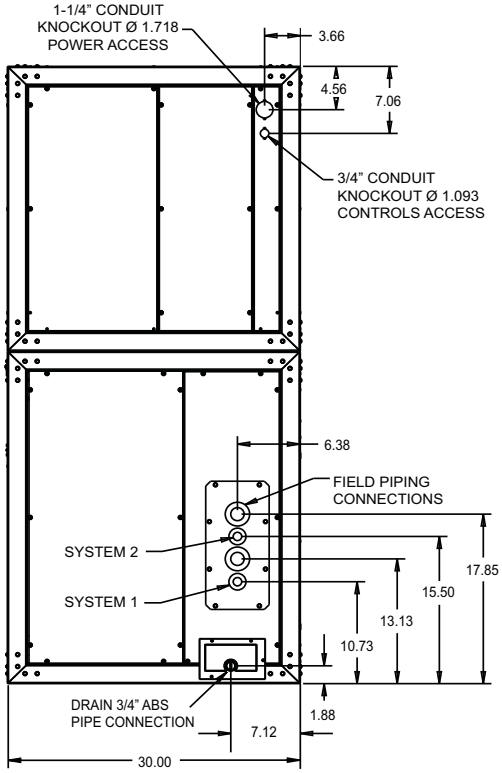

RIGHT SIDE VIEW - DRAIN PIPING/CONTROLS

Unit Dimensions NC090/120, NL090/120, ND120 and NM120

BOTTOM VIEW

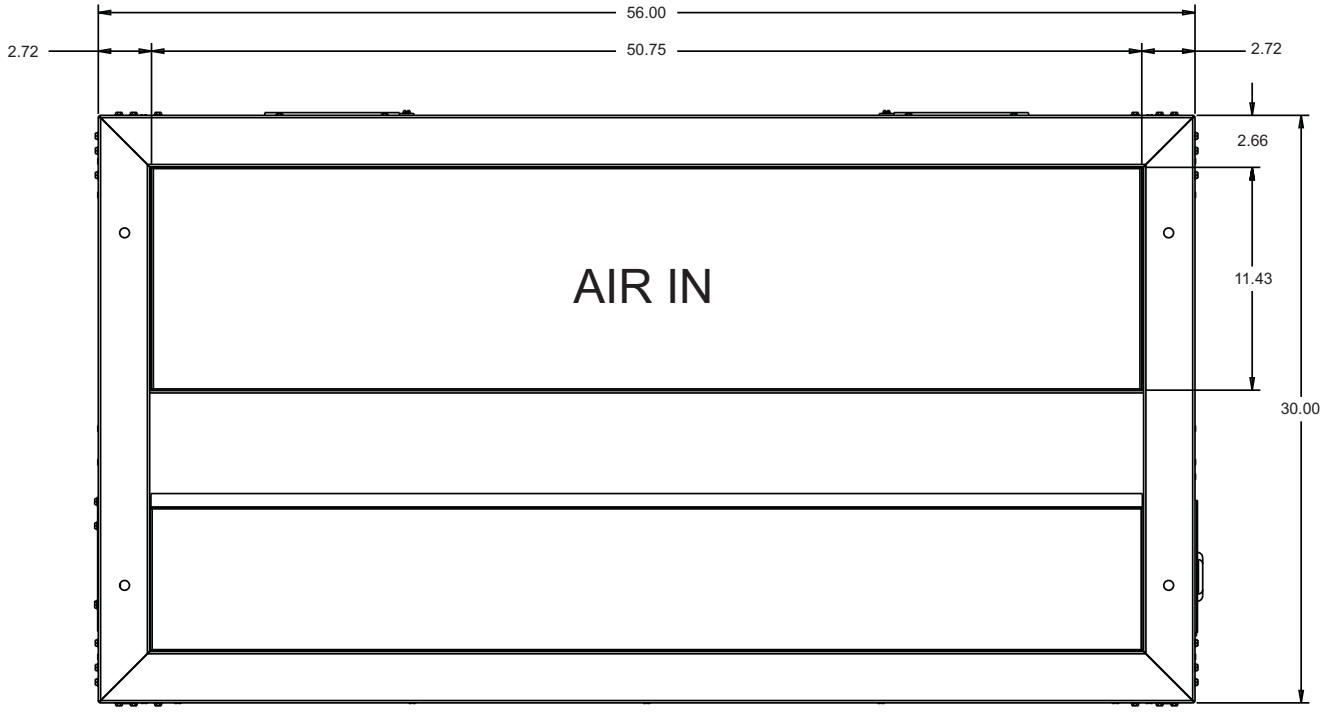

HORIZONTAL CONFIGURATION

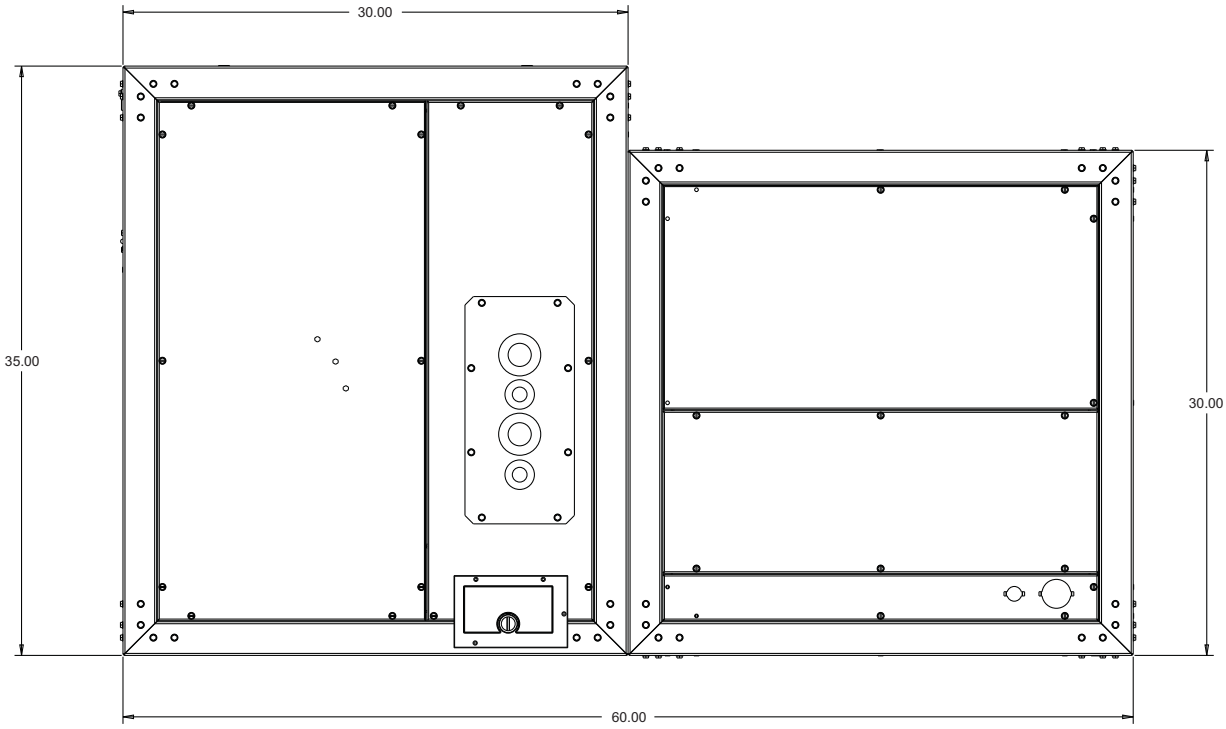

Unit Dimensions NC090/120, NL090/120, ND120 and NM120 (Continued)

TOP VIEW

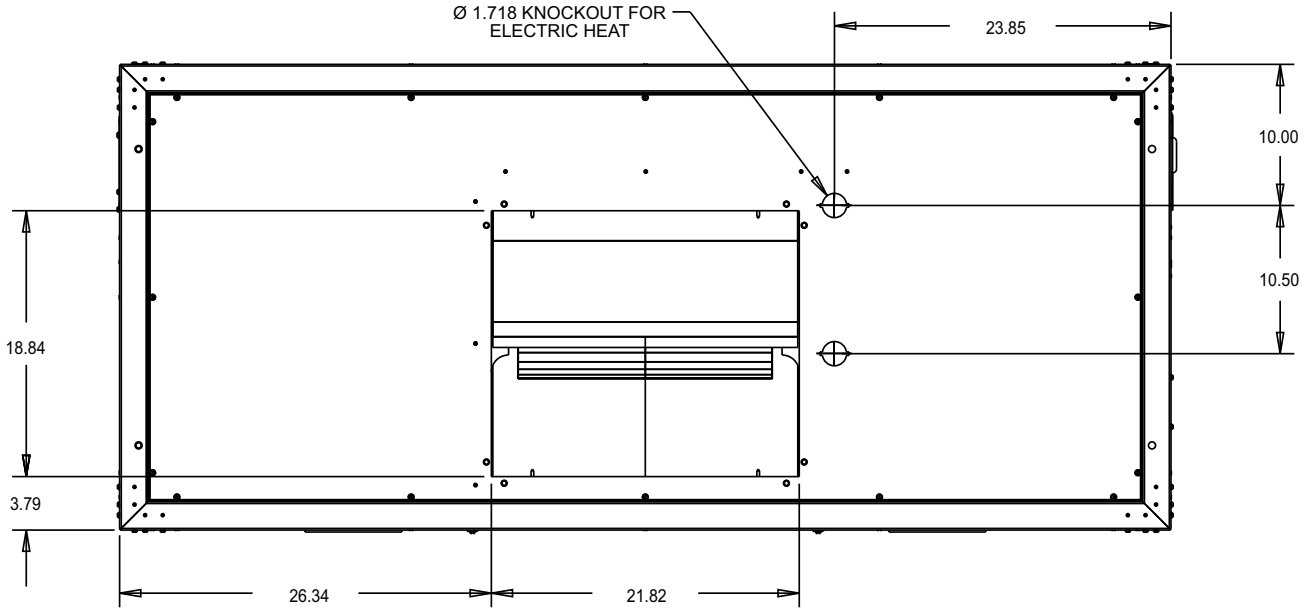

TOP VIEW - BLOWER OUTLET

FRONT AND SIDE VIEW

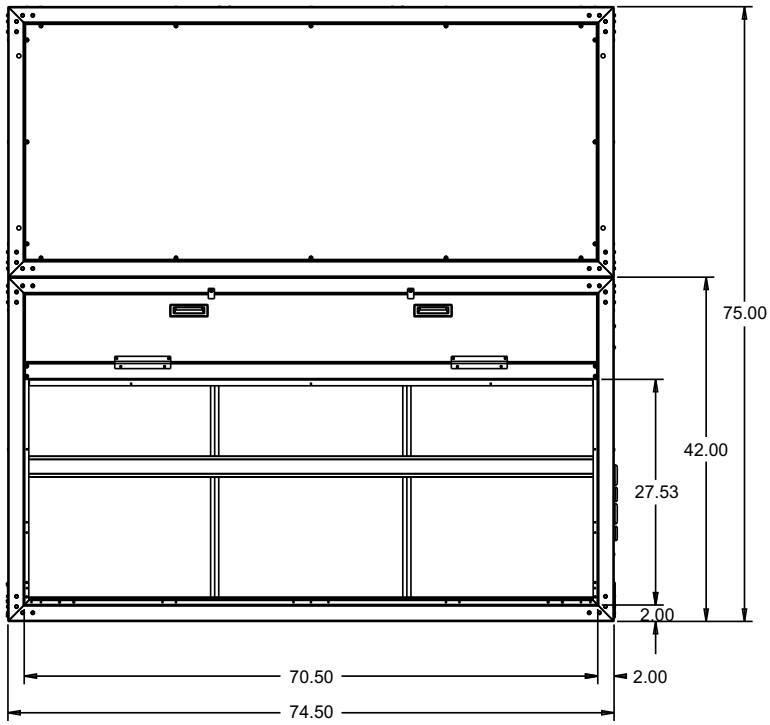

FRONT VIEW - RETURN AIR
INDOOR

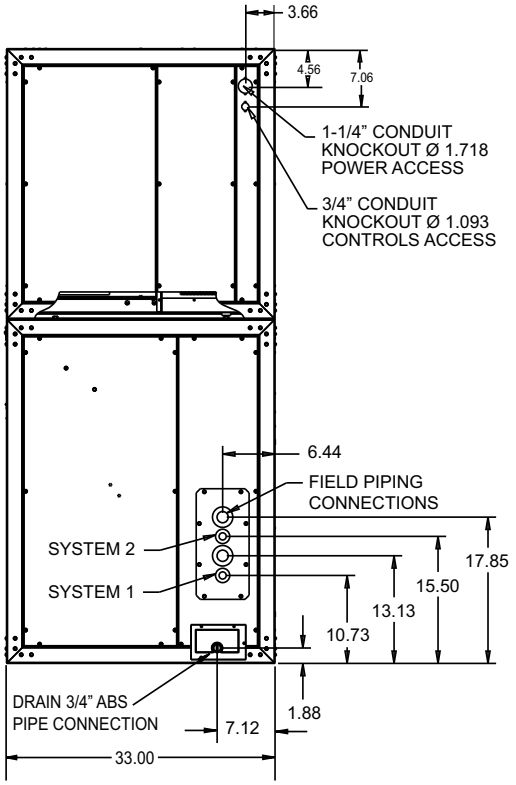

RIGHT SIDE VIEW - DRAIN PIPING/CONTROLS

Unit Dimensions NC/ND/NL/NM180

BOTTOM VIEW

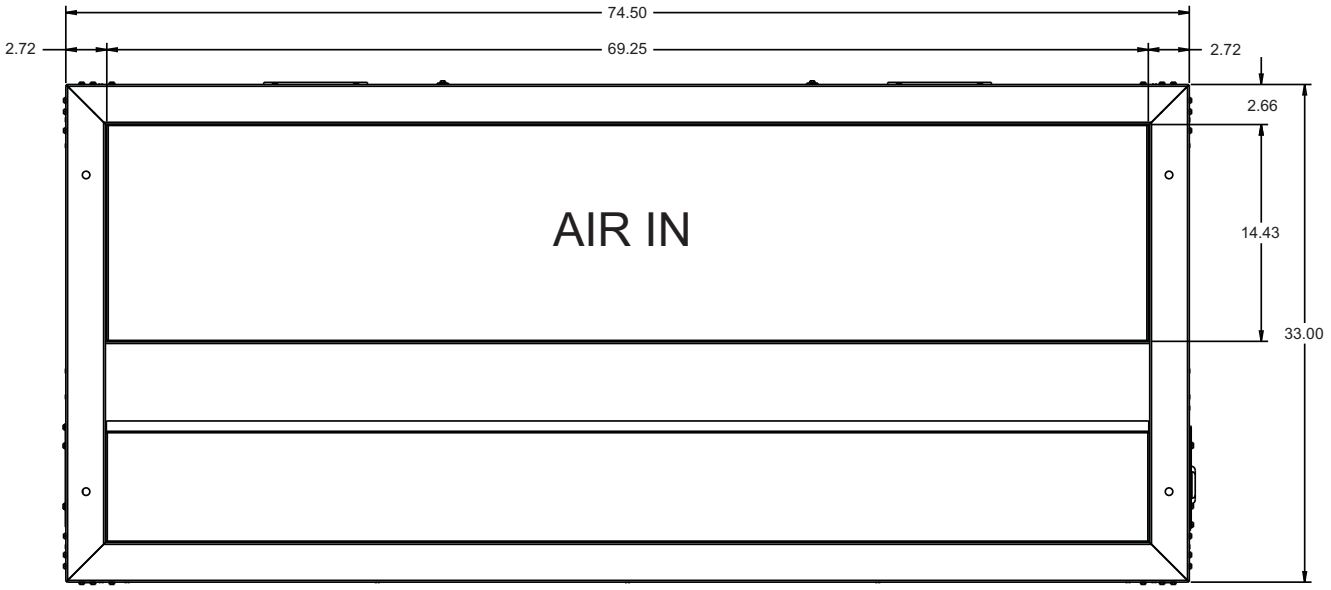

HORIZONTAL CONFIGURATION

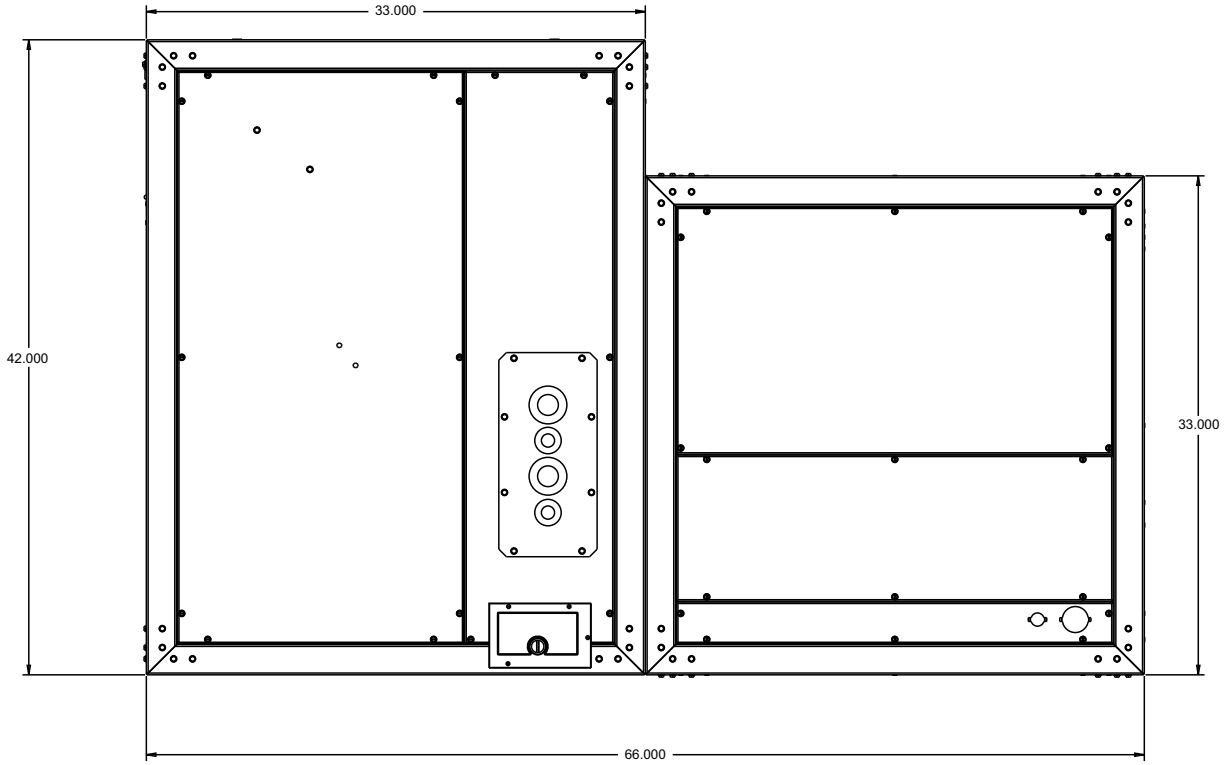

Unit Dimensions NC/ND/NL/NM180 (Continued)

TOP VIEW

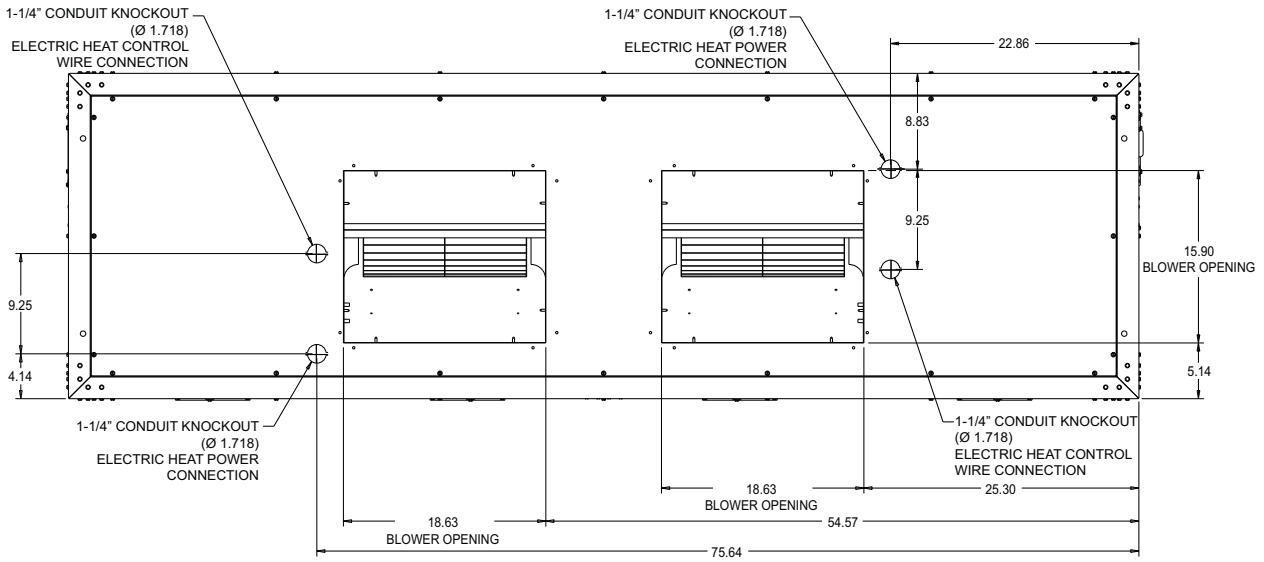

TOP VIEW BLOWER OUTLET
INDOOR

FRONT AND SIDE VIEW

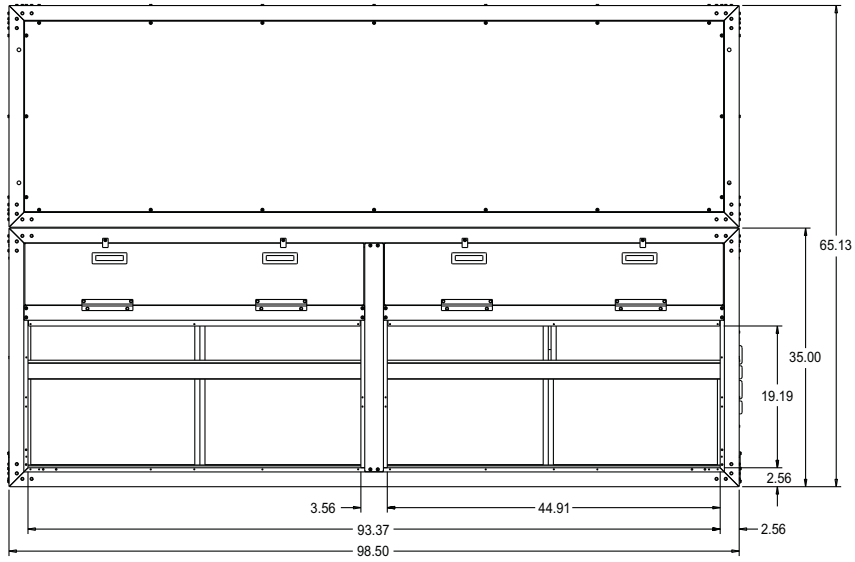

FRONT VIEW - RETURN AIR
INDOOR

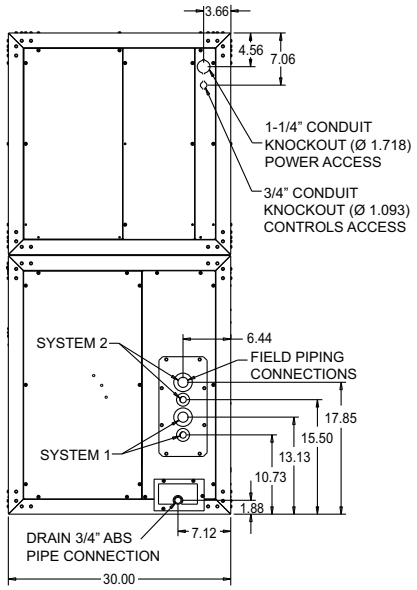

RIGHT SIDE VIEW - DRAIN PIPING/CONTROLS

Unit Dimensions NC/ND/NL/NM240

BOTTOM VIEW

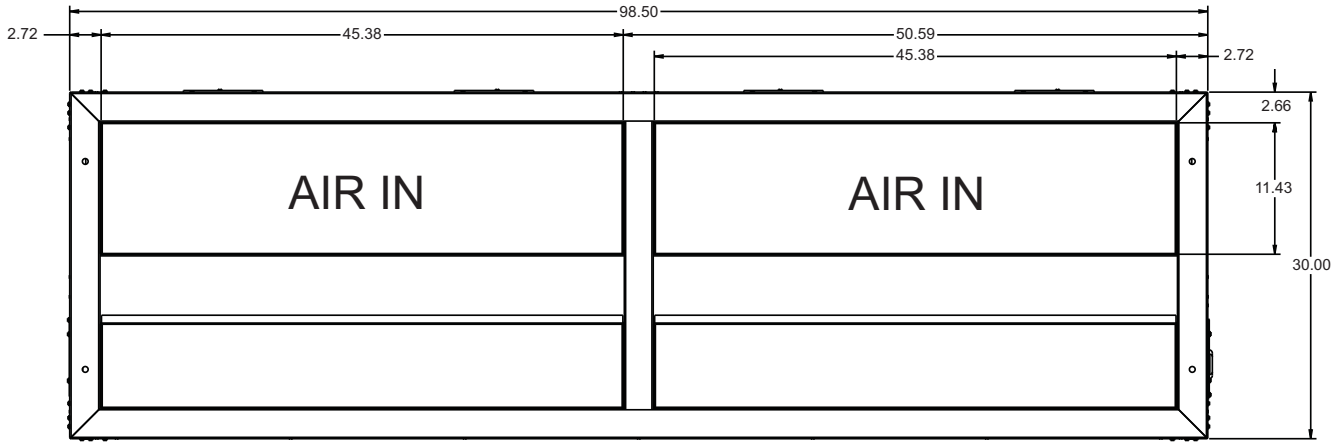

HORIZONTAL CONFIGURATION

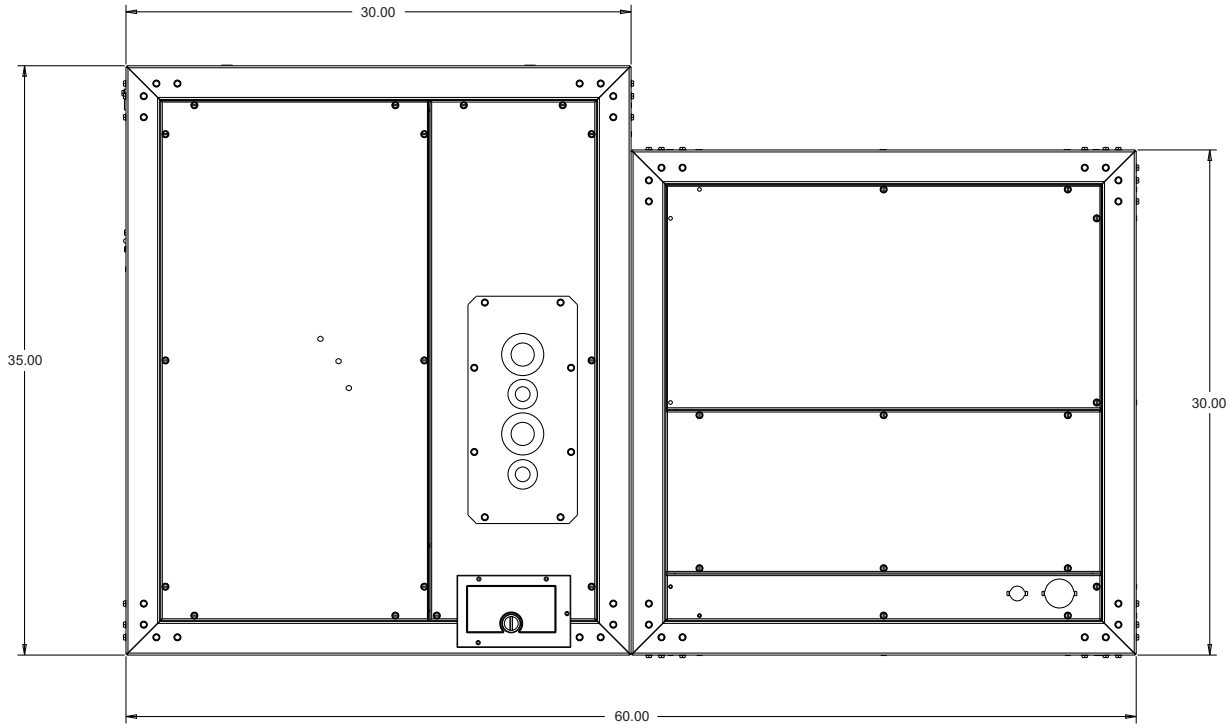

Unit Dimensions NC/ND/NL/NM240 (Continued)

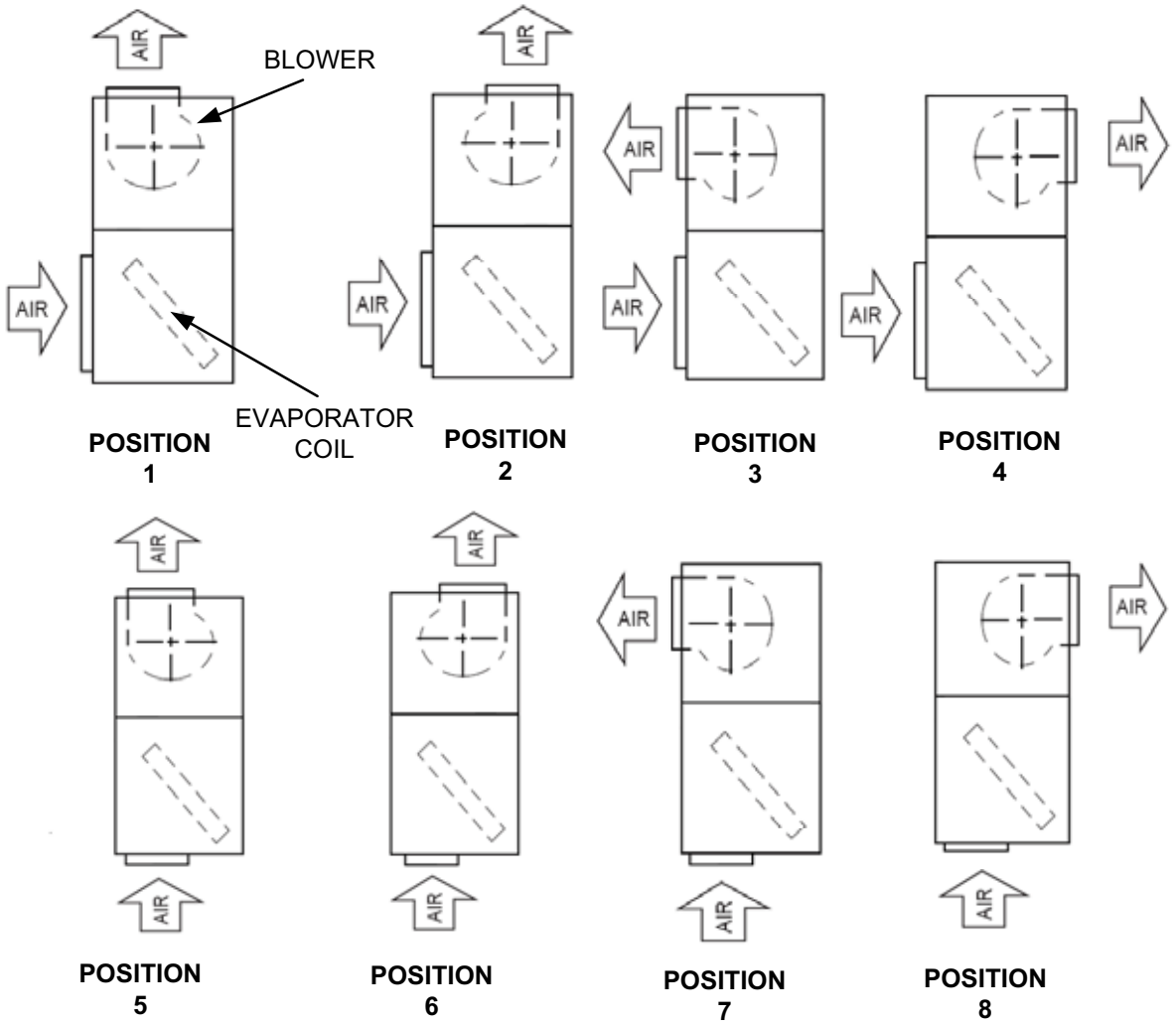

Vertical Airflow Arrangements NC/NL090-240 and ND/NM120-240

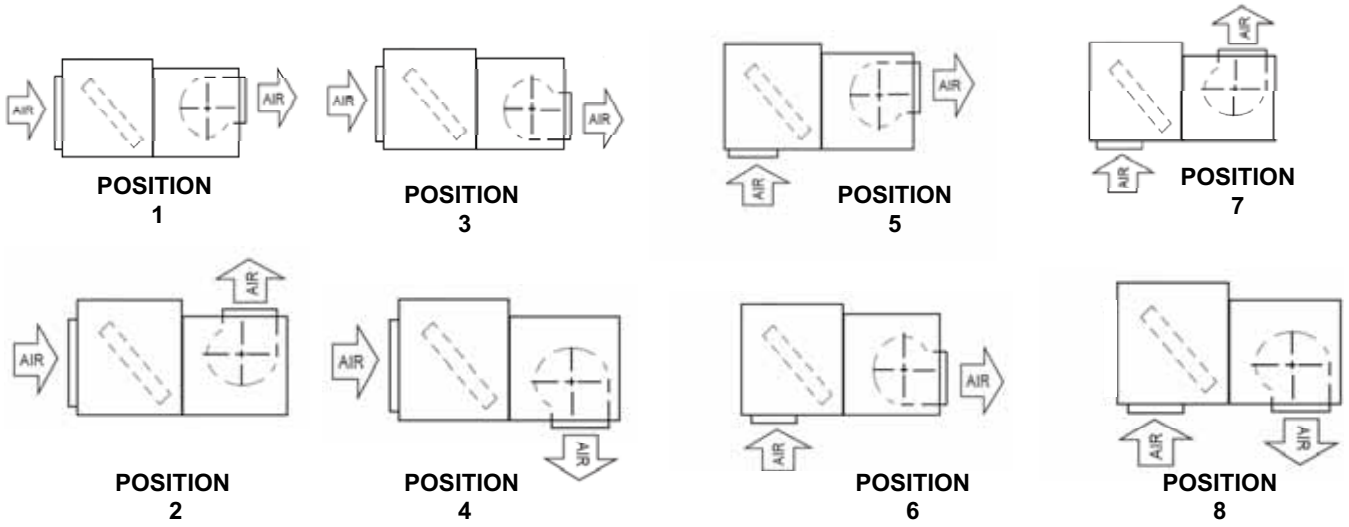

Horizontal Airflow Arrangements NC/NL090-240 and ND/NM120-240

TOP VIEW

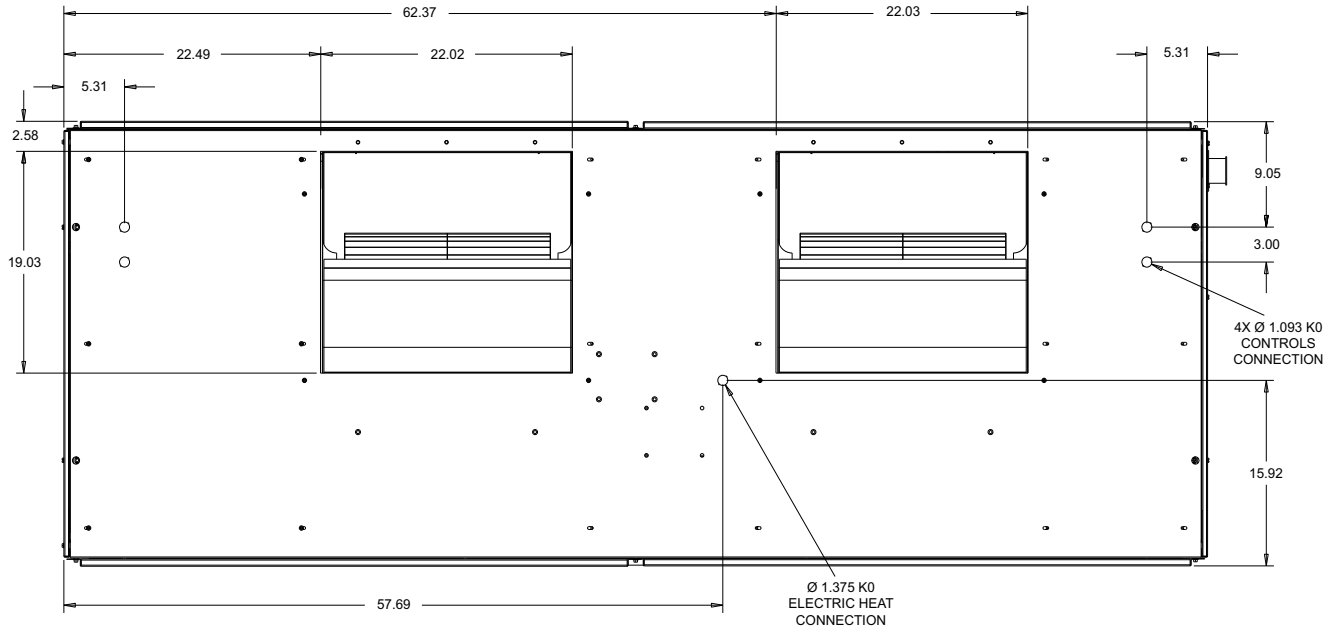

FRONT AND SIDE VIEW

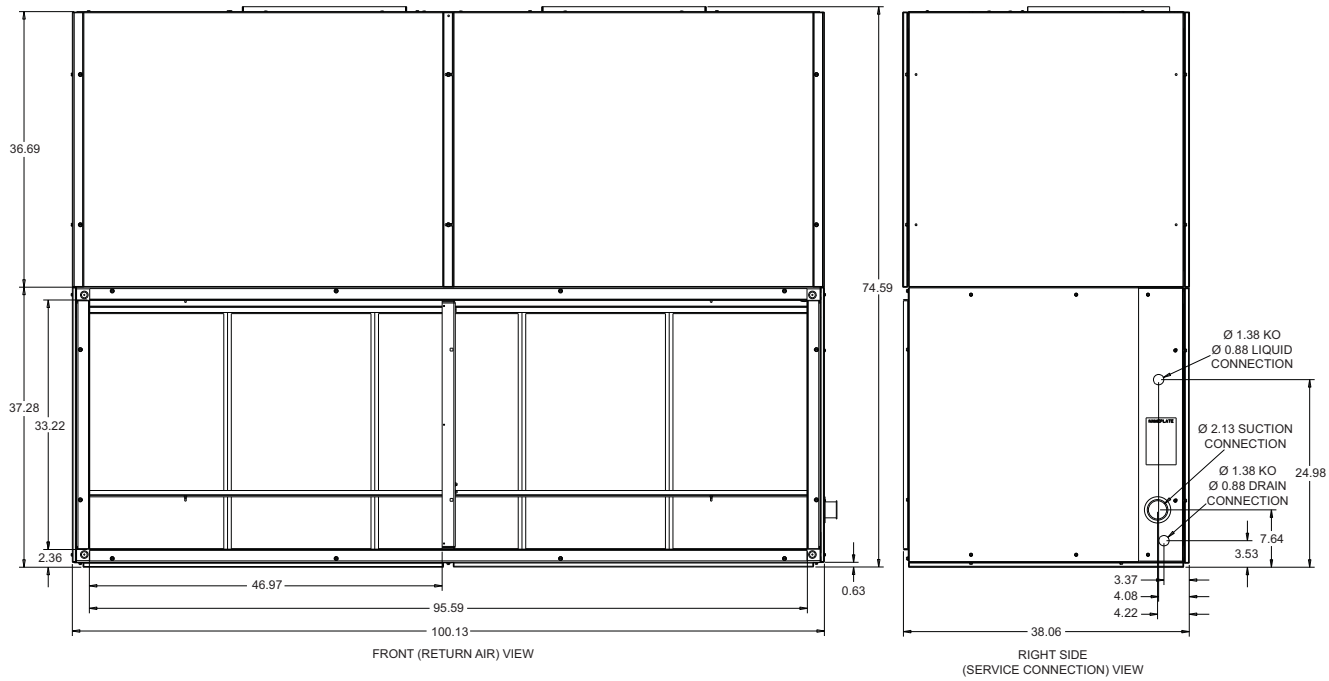

Unit Dimensions NC300

HORIZONTAL CONFIGURATION

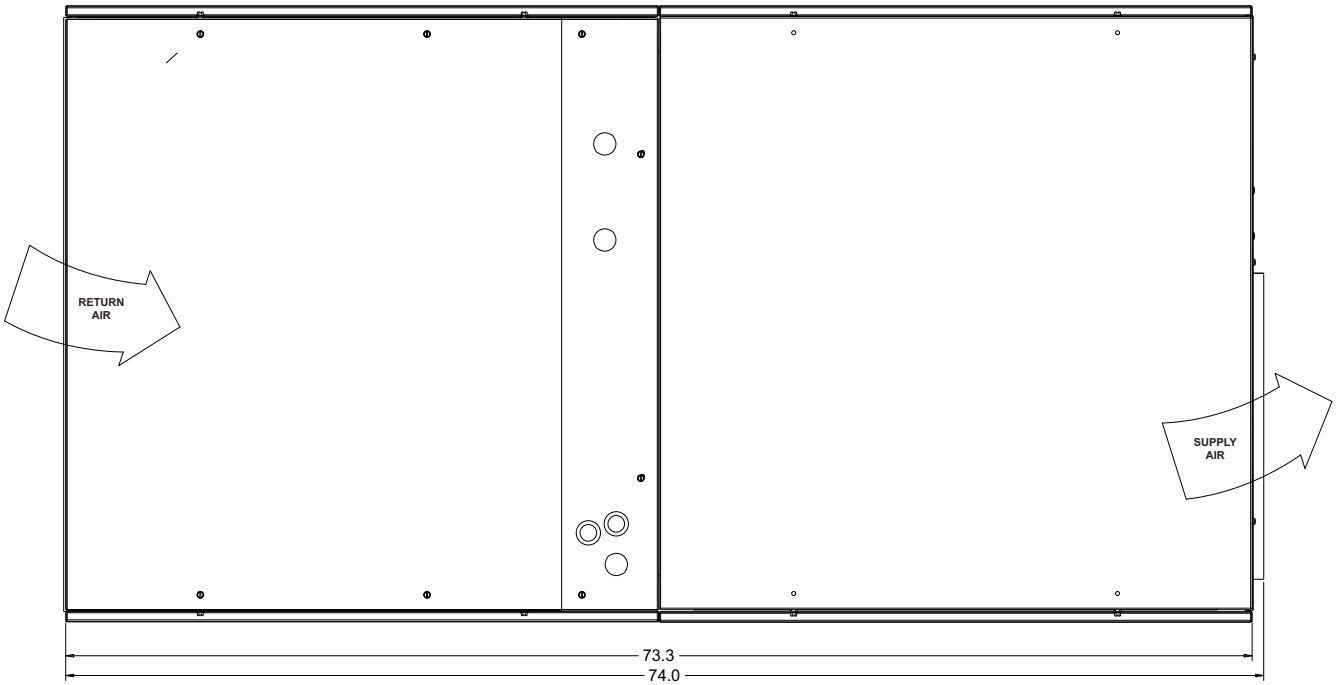

Unit Dimensions NC300 (Continued)

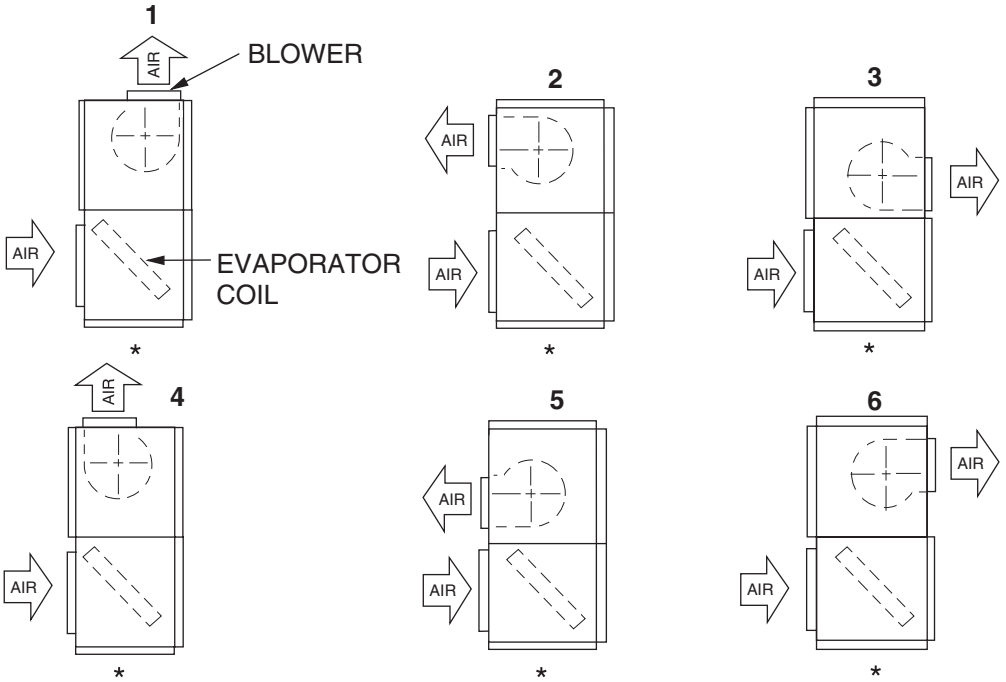

Vertical Airflow Arrangements NC300

Note: *If required, some air can be returned through the bottom of the evaporator section

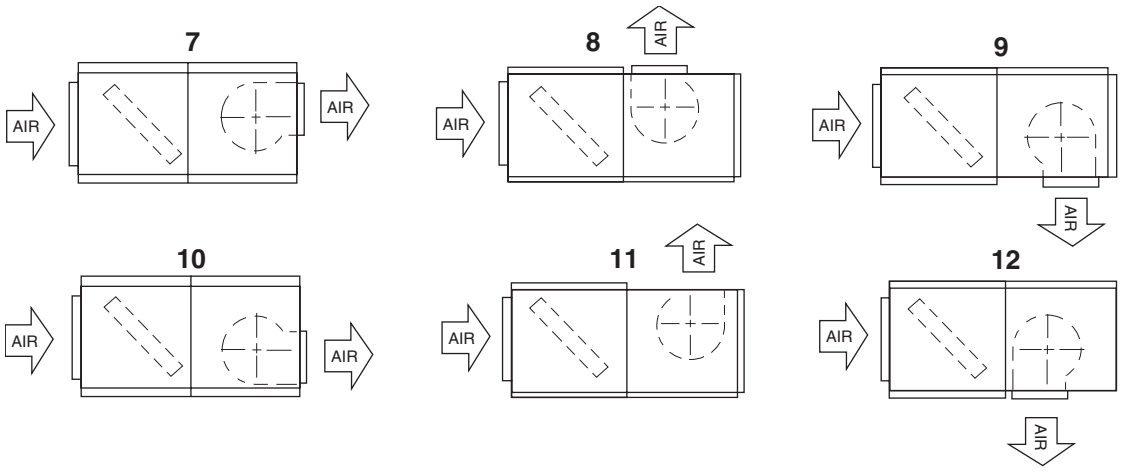

Horizontal Airflow Arrangements NC300

PIPING, ELECTRICAL AND DUCT OPENING CONNECTION SIZES

MODEL	NC/NL090	NC/NL120	ND/NM120	NC/NL180	ND/NM180	NC/NL240	ND/NM240	NC300
SYSTEM DATA								
No. Refrigeration Circuits	1	1	2	1	2	1	2	1
Suction Line OD (in.)	1 1/8	1 3/8	1 1/8	1 5/8	1 3/8	1 5/8	1 3/8	2 1/8
Liquid Line OD (in.)	5/8	7/8	5/8	7/8	5/8	7/8	7/8	7/8
Power Wiring Knockout	1 3/4	1 3/4	1 3/4	1 3/4	1 3/4	1 3/4	1 3/4	7/8
Control Wiring Knockout	1 1/8	1 1/8	1 1/8	1 1/8	1 1/8	1 1/8	1 1/8	1 1/8
Electric Heat Wiring Knockout	1 3/4	1 3/4	1 3/4	1 3/4	1 3/4	1 3/4	1 3/4	7/8
Drain Line Fitting PVC Stub	3/4	3/4	3/4	3/4	3/4	3/4	3/4	7/8[1]
BLOWER OUTLET								
Number	1	1	1	1	1	2	2	2
Width	13.4	15.9	15.9	18.9	18.9	15.9	15.9	22
Length	15.6	18.6	18.6	21.6	21.6	18.6	18.6	22
RETURN AIR INLET								
Width	20.5	20.5	20.5	27.3	27.3	19.2	19.2	33.2
Length	52.0	52.0	52.0	71.9	71.9	93.4	93.4	95.6

1 7/8 In Steel pipe

Minimum Clearances

Minimum Clearances	
Top with Supply Air Opening[1]	24”
Front with Return Air Opening	24”
Right Side with access for Piping, Power & Control Wiring Connections[2]	24”
Left Side	24”
Rear[3]	N/A
Bottom[4]	N/A

1 This dimension will vary if an electric heater, a supply air plenum or a base is used.
2 This dimension is required for normal installation and service.
3 Although no clearance is required for service and operation, some clearance may be required for routing the power and control wiring.
4 Allow enough clearance to trap the condensate drain line.

Note: If the coil has to be removed, the blower section can be unbolted and set aside and the coil can be lifted out the top of the evaporator section.

Unit Mounting - NC/ND/NL/NM 090 Thru 240

The split air handling units can be applied in various horizontal positions. The Typical Suspension of AHU's From Ceiling Figure shows recommended suspension rigging using properly sized all-thread and metal c-channel. All components to suspend an AHU must be field supplied. Please refer to the units total weight, center of gravity and corner weights. (Horizontal position) shown in the appropriate table for proper support sizing.

END VIEW

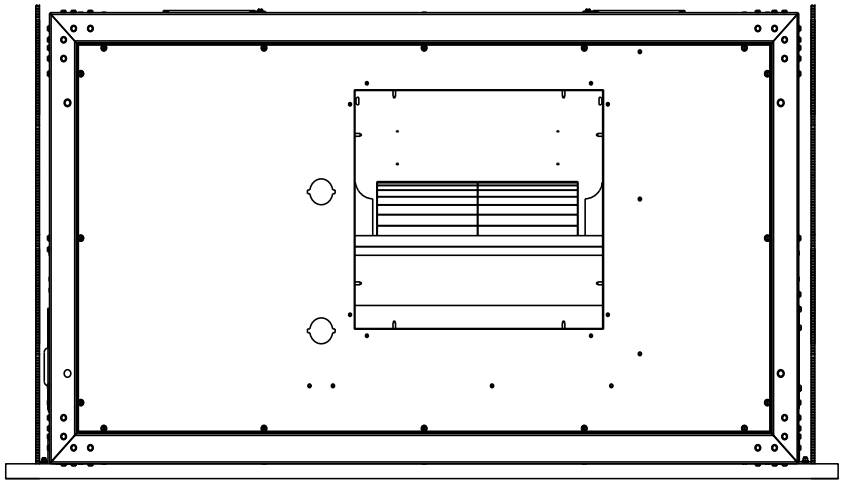

MOUNTING DETAIL

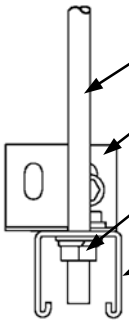

SIDE VIEW

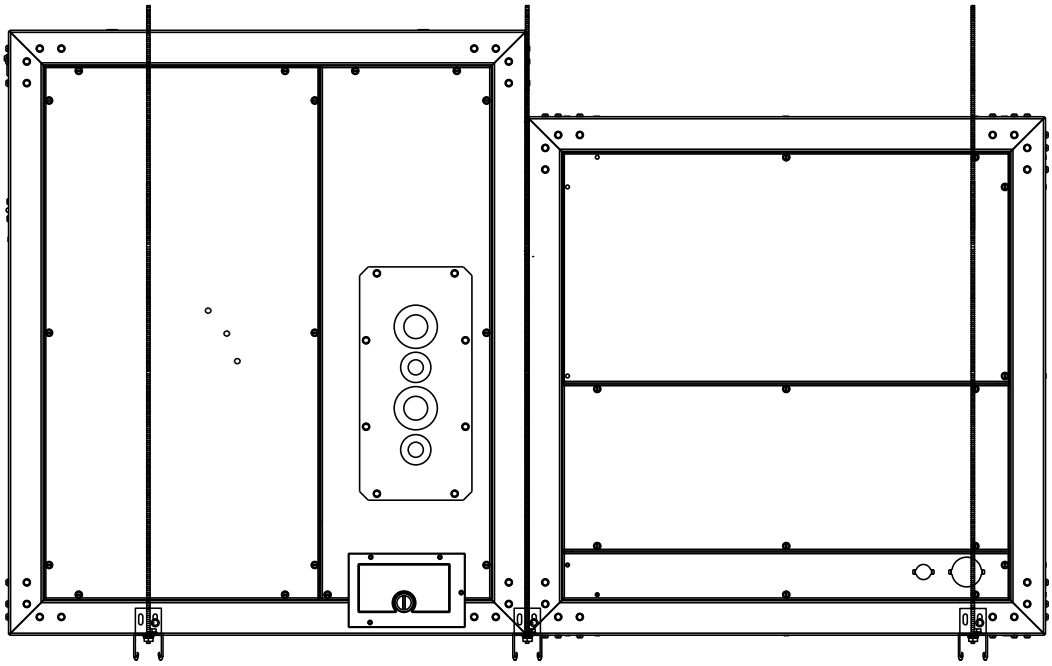

Typical Suspension of AHU's From Ceiling

Unit Mounting - NC300

The NC300 evaporator blower may be suspended from the joists with isolation type hangers or hooks. Suspension accessories 1HH0403 (NC300) may be ordered separately. All Suspension accessories include three suspension channels and hardware. The channels extend across the evaporator coil section, the heating coil section (if included) and the blower section. Each channel is to be bolted to each section as shown.

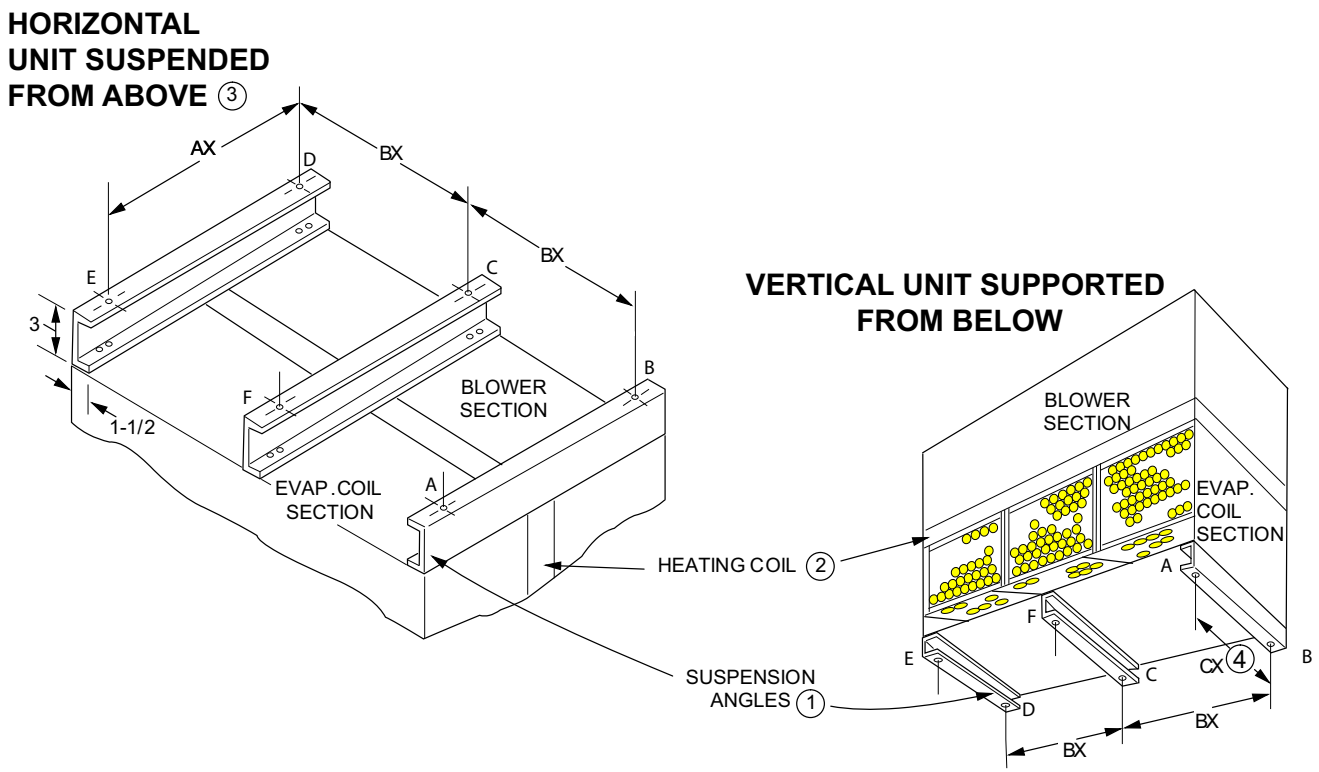

1. The same channels can be used in either position. When used to support a vertical unit, these channels should be cut to match the bottom dimension of the evaporator section.

2. The suspension channels have two sets of mounting holes to accommodate horizontal units with or without a heating coil. On a horizontal unit without a heating coil, the suspension channels will extend 3” beyond both ends of the unit.

3. The same channels can be used to support a horizontal, floor-mounted unit from below.

4. After these bottom channels are cut per Note 1, a new hole will have to be drilled at the cut end if the unit is to be mounted on isolators.

Typical Suspension of NC300

Unit Mounting Dimensions- NC300

UNIT	DIMENSIONS, INCHES		
	AX	BX	CX
NC300	69-1/4	49-1/16	26-5/8

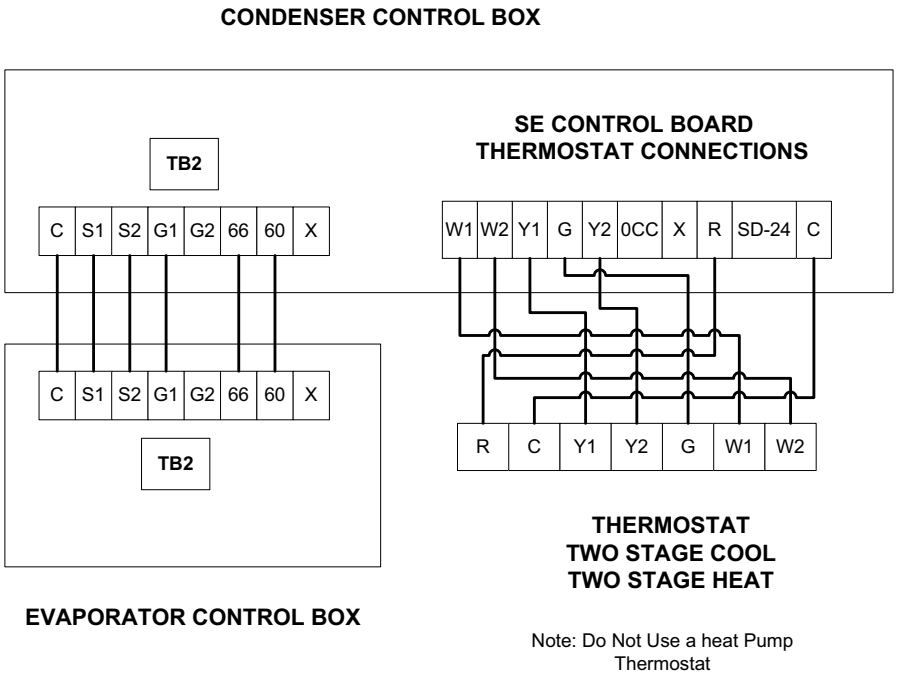

Note: Do Not Use a heat Pump Thermostat

Typical Simplified Field Wiring Diagram – NC180 Evaporator with PC180 Heat Pump Condenser

Note: On non-NC/ND Evaporator models, isolation relays must be installed to avoid overloading on 75 VA transformers on the condensing unit.

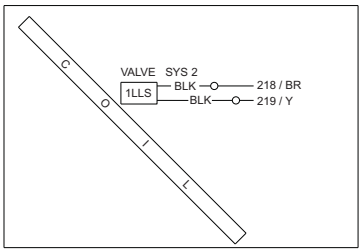

Typical NC120 - 240 Liquid Line Solenoid Wiring

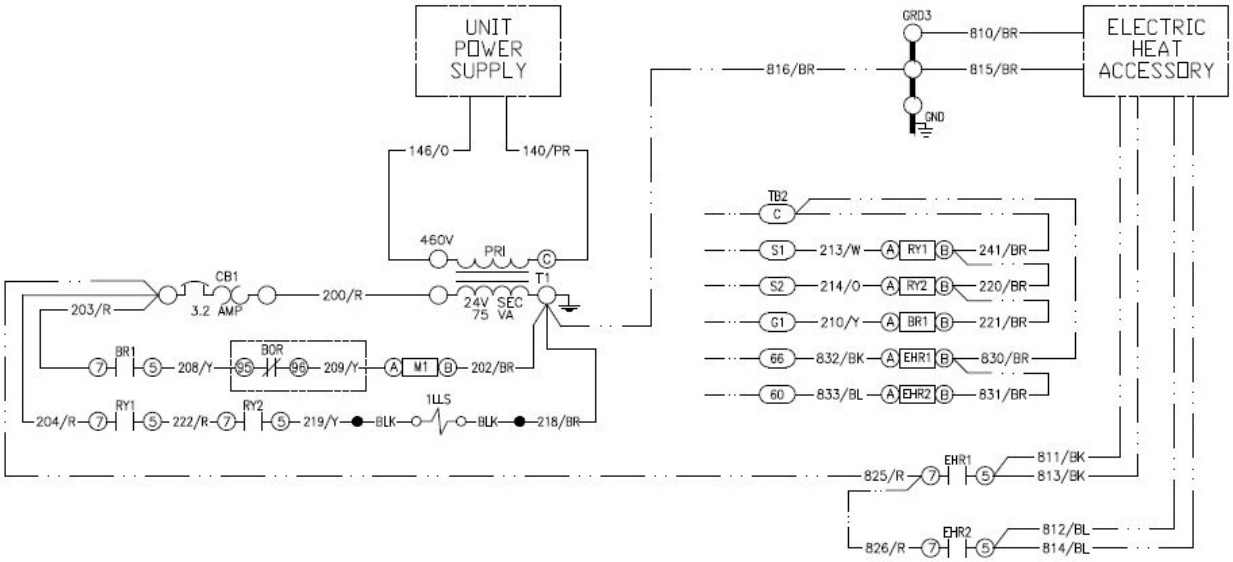

Typical Simplified Field Wiring Diagram – NC180 Evaporator

CONDENSER CONTROL BOX

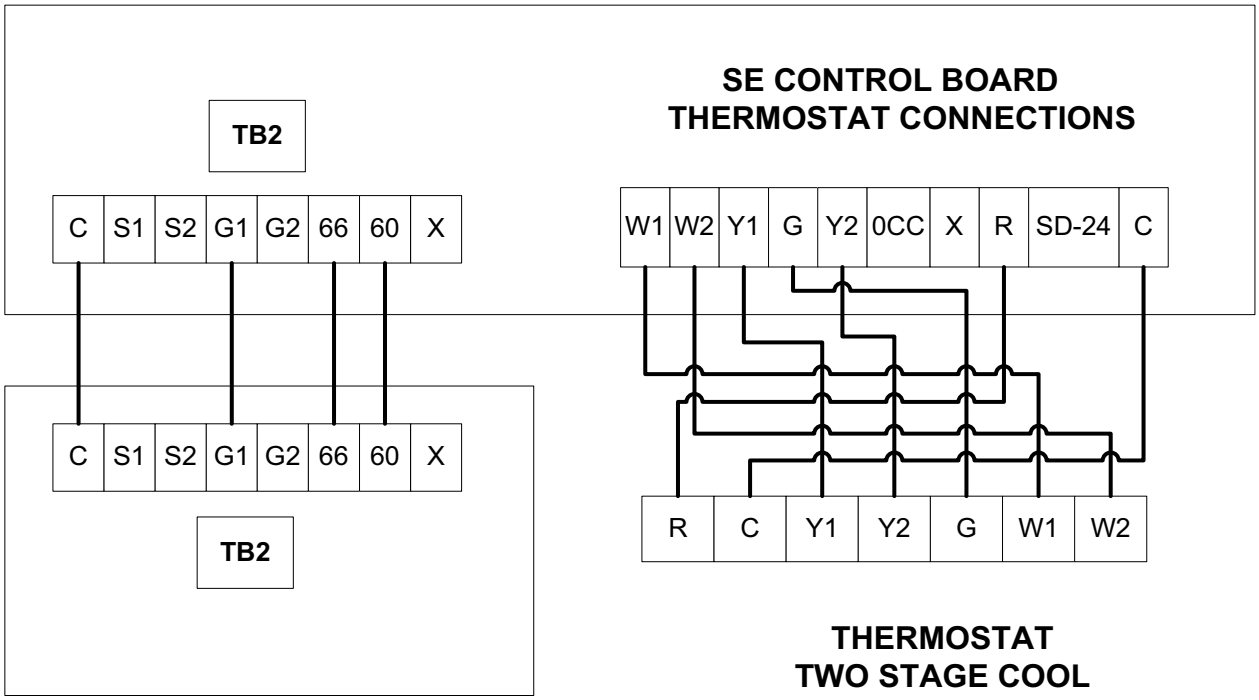

THERMOSTAT
TWO STAGE COOL
TWO STAGE HEAT

EVAPORATOR CONTROL BOX

Note: Do Not Use a heat Pump Thermostat

Typical Simplified Field Wiring Diagram – ND180 Evaporator with PD180 Heat Pump Condenser

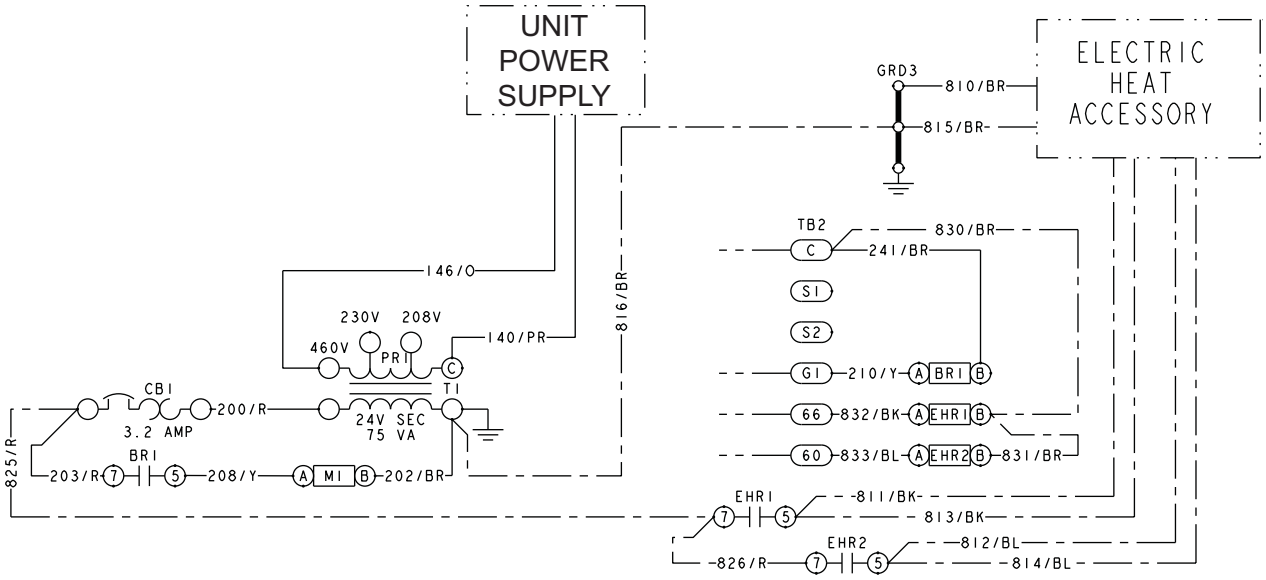

Typical Simplified Field Wiring Diagram – ND180 Evaporator

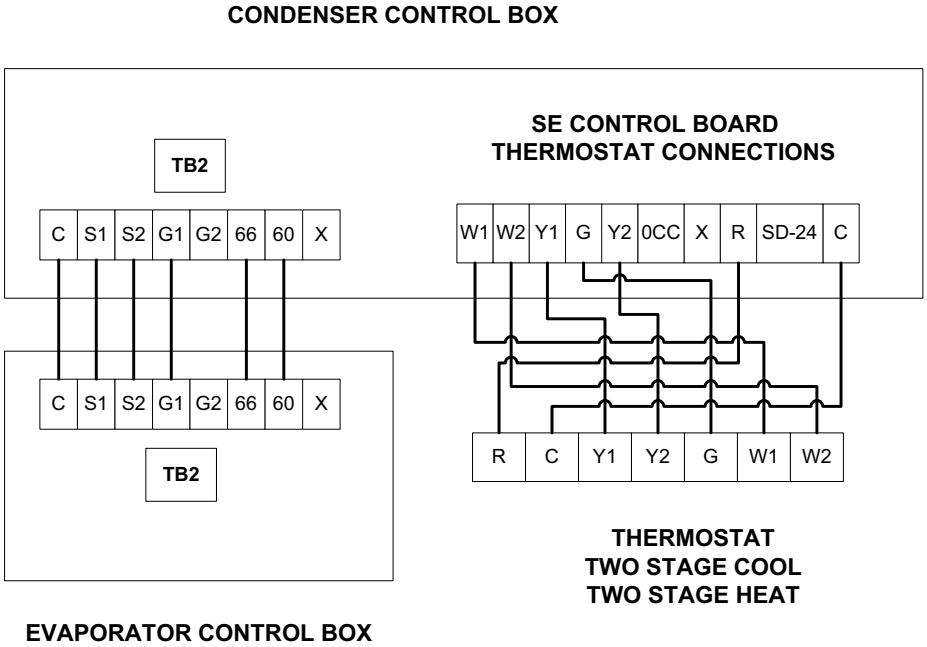

Typical Simplified Field Wiring Diagram – NC240 Evaporator with YC240 Condenser

Note: On non NC/ND Evaporator models, isolation relays must be installed to avoid overloading on 75 VA transformers on the condensing unit.

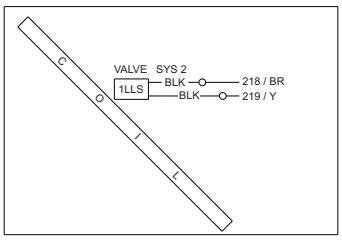

Typical NC240 Liquid Line Solenoid Wiring

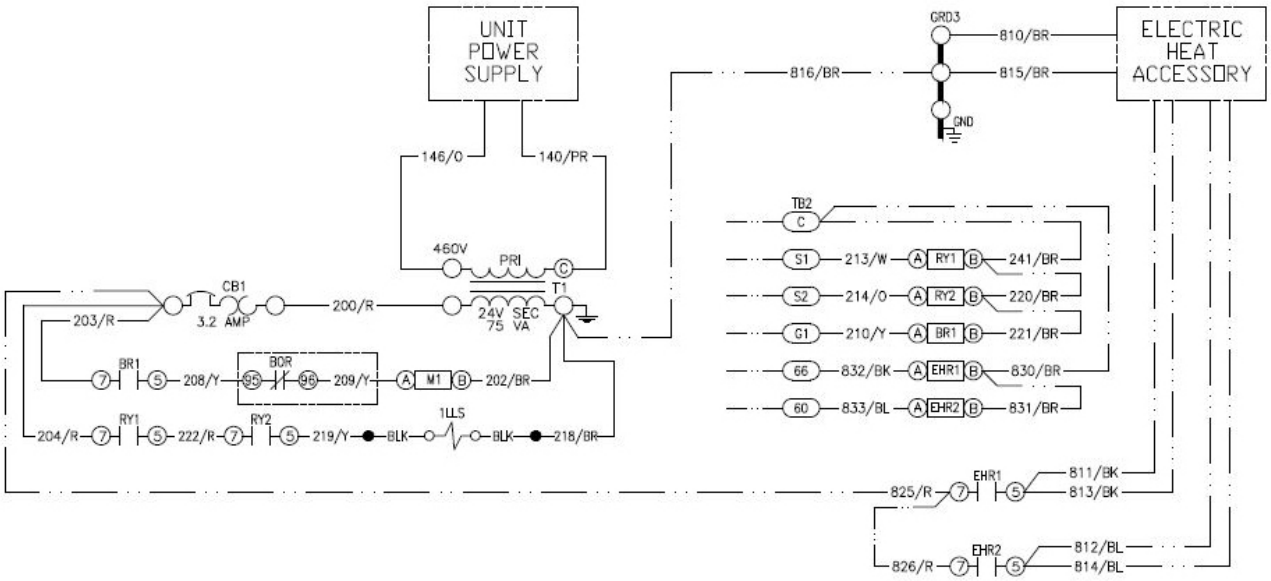

Typical Simplified Field Wiring Diagram – NC240 Evaporator

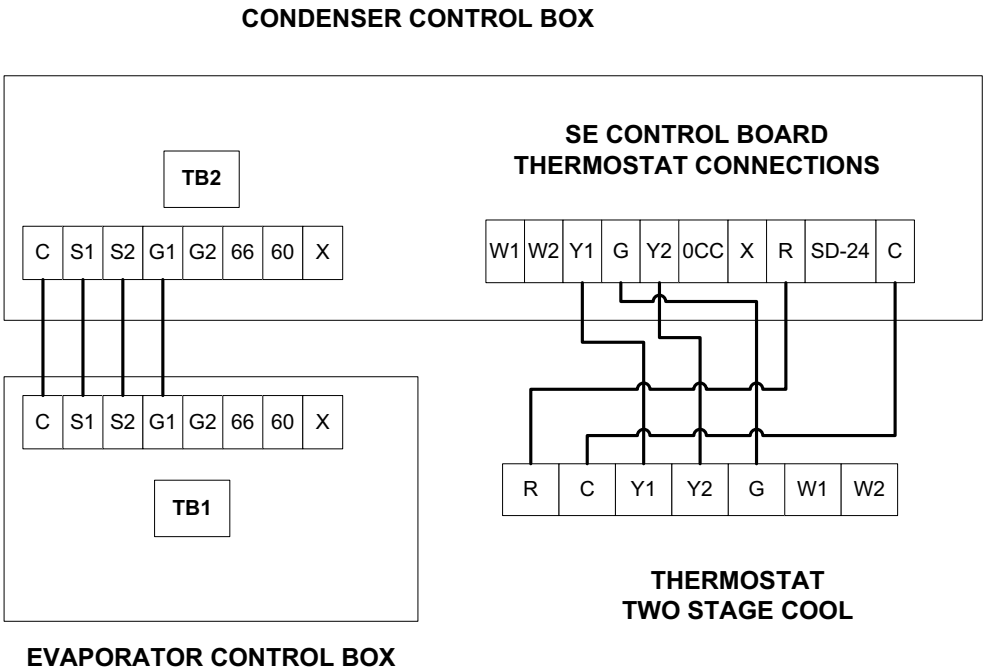

Typical Field Wiring Diagram - NC300 Evaporator Unit with YC300 Condenser Unit

Note: On non NC/ Evaporator models, isolation relays must be installed to avoid overloading on 75 VA transformers on the condensing unit.

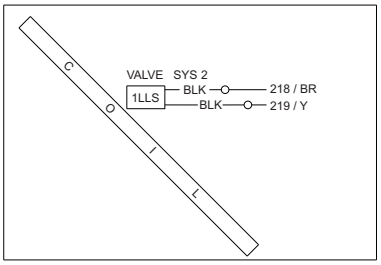

Typical NC300 Liquid Line Solenoid Wiring

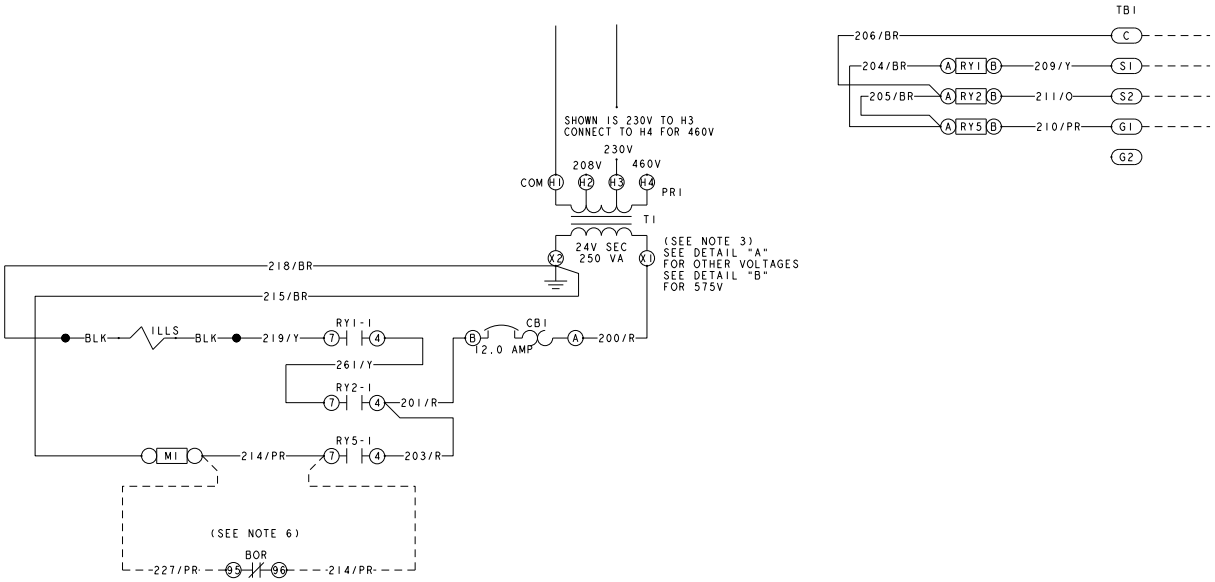

Typical Field Wiring Diagram - NC300 Evaporator

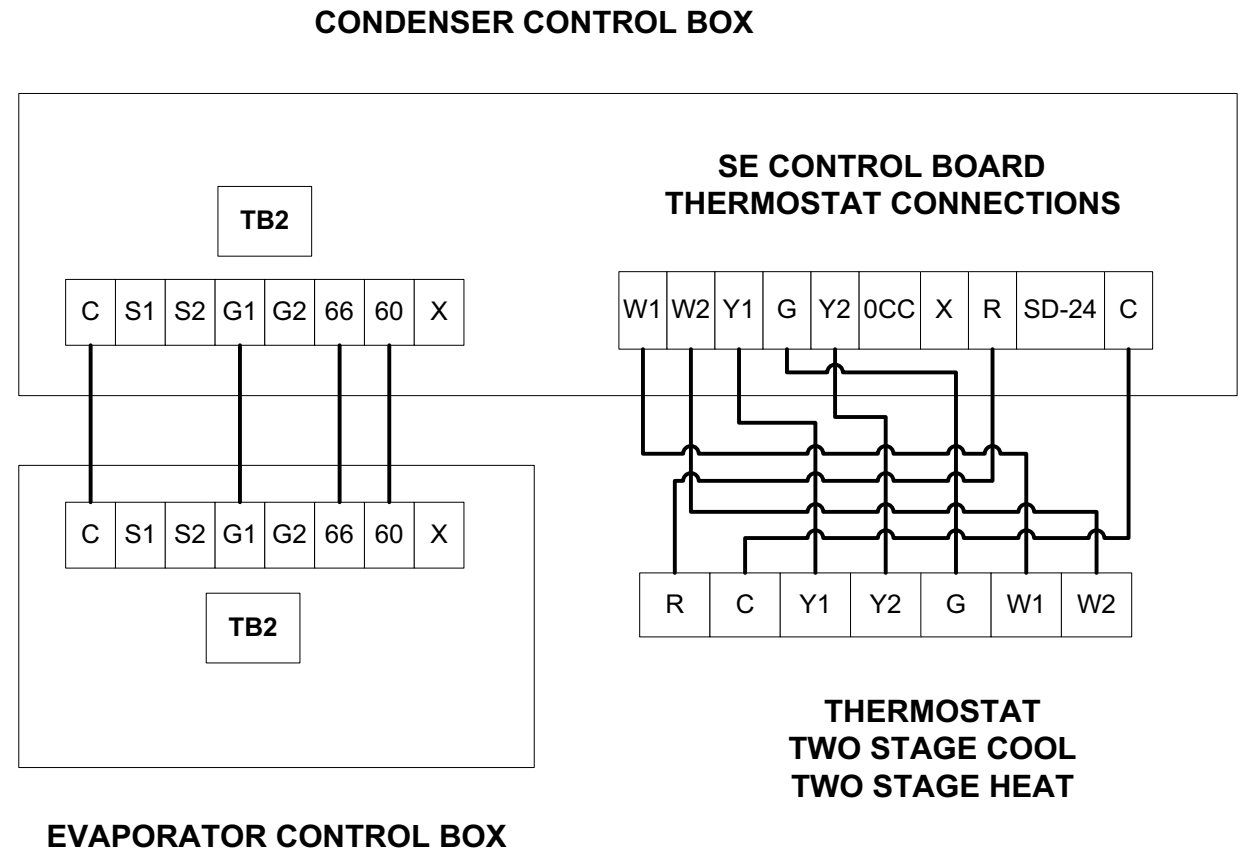

Typical Simplified Field Wiring Diagram – ND240 Evaporator with YD240 Condenser

Note: On non NC/ND Evaporator models, isolation relays must be installed to avoid overloading on 75 VA transformers on the condensing unit.

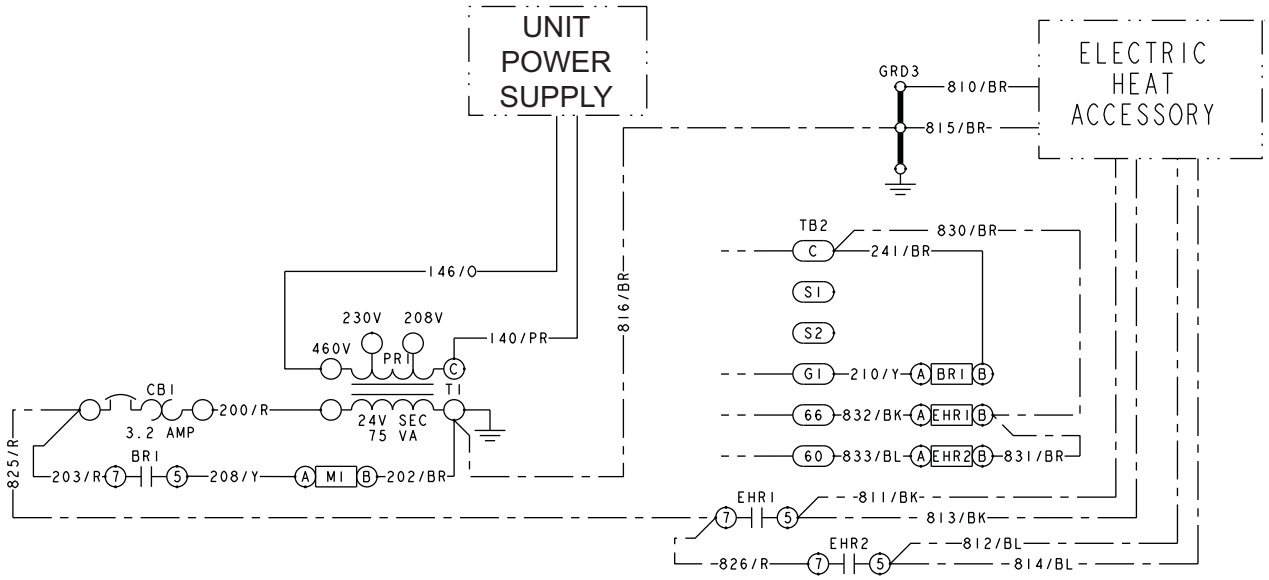

Typical Simplified Field Wiring Diagram – ND240 Evaporator

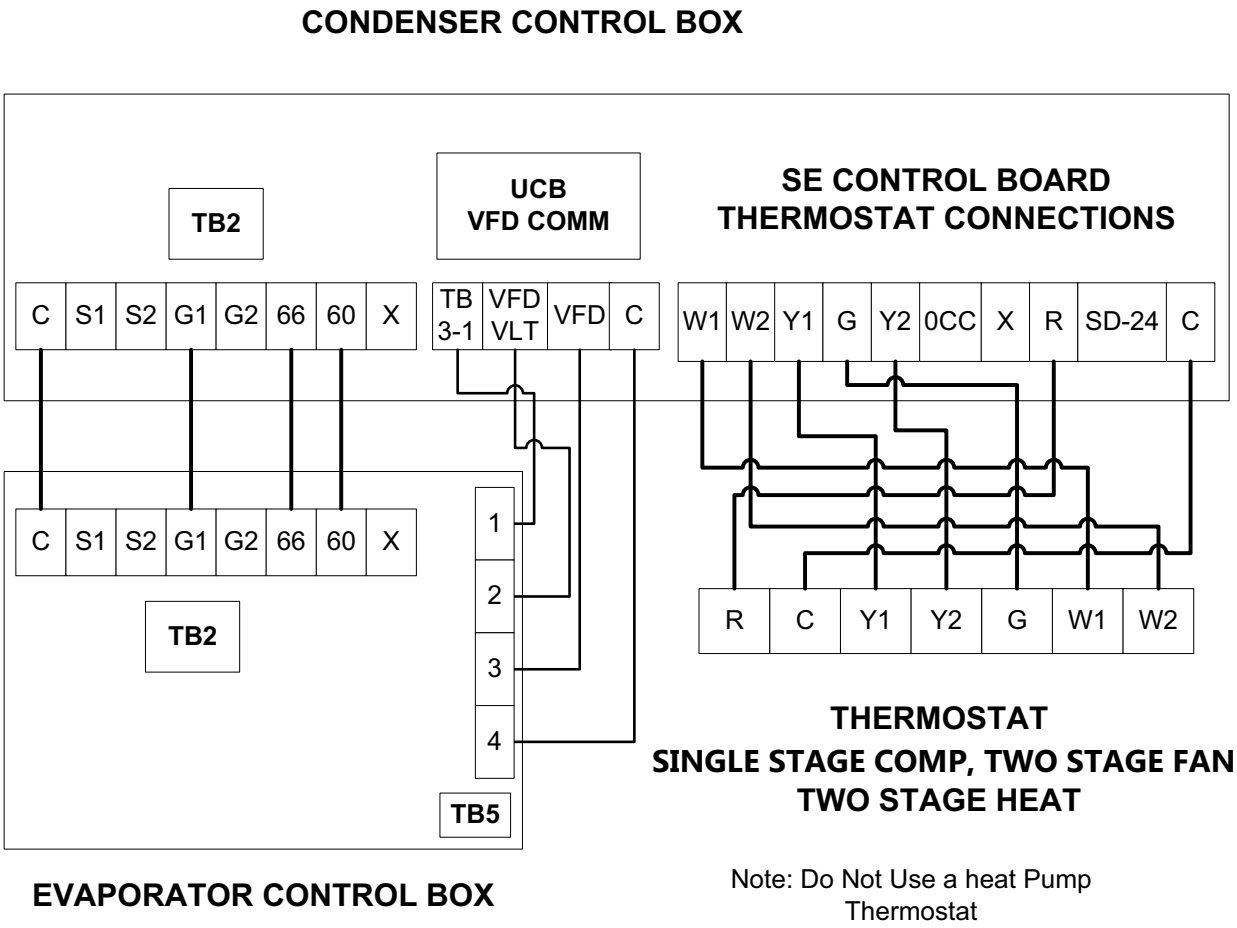

Typical Simplified Field Wiring Diagram – NL090 Evaporator with PC090/PE090 Heat Pump Condenser

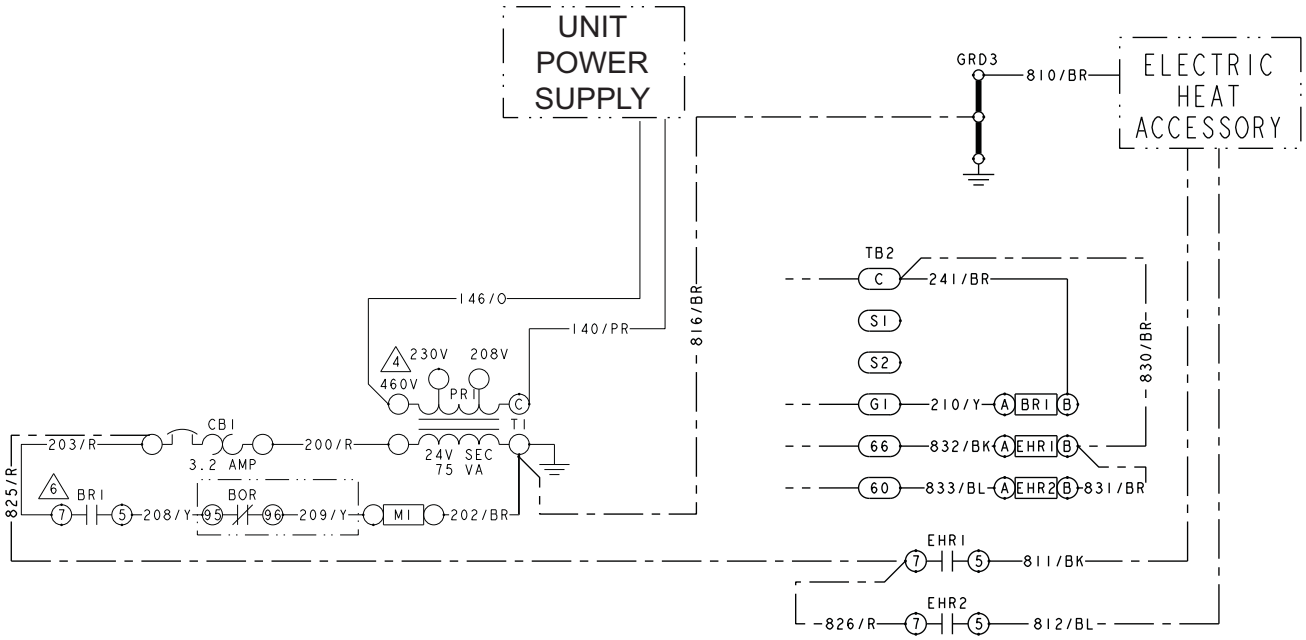

Typical Simplified Field Wiring Diagram – NL090 Evaporator

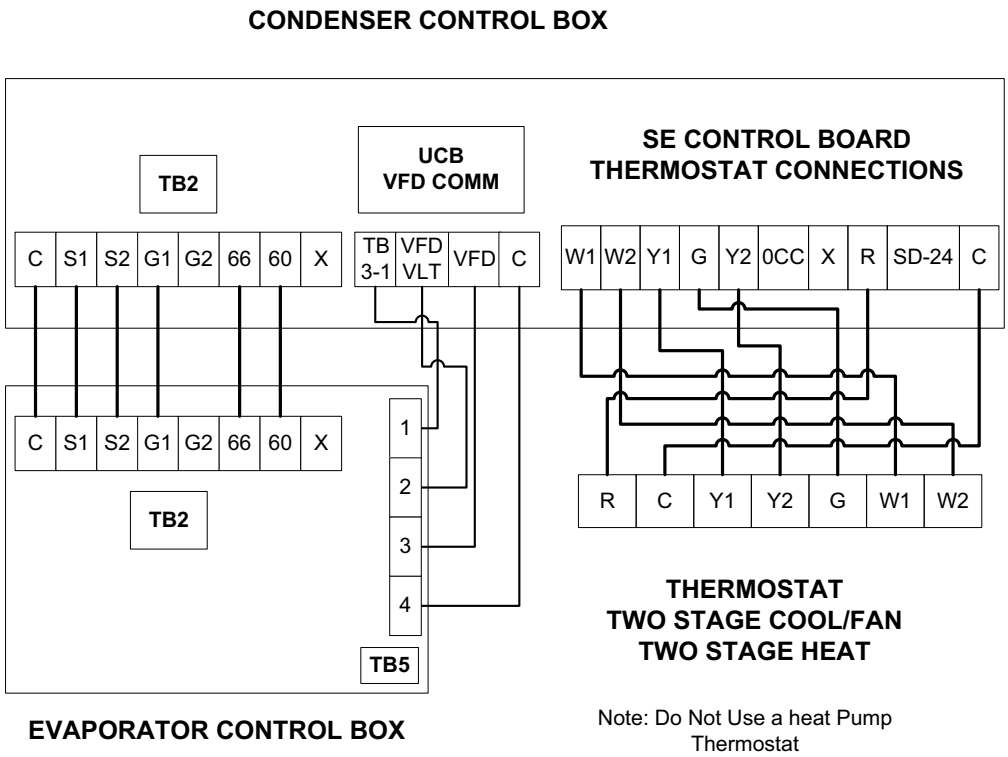

Note: Do Not Use a heat Pump Thermostat

Typical Simplified Field Wiring Diagram – NL120 thru 180 Evaporator with PC120 thru 180 Heat Pump Condenser

Note: On non-NC/ND Evaporator models, isolation relays must be installed to avoid overloading on 75 VA transformers on the condensing unit.

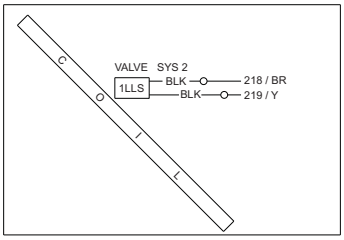

Typical NL120 - 240 Liquid Line Solenoid Wiring

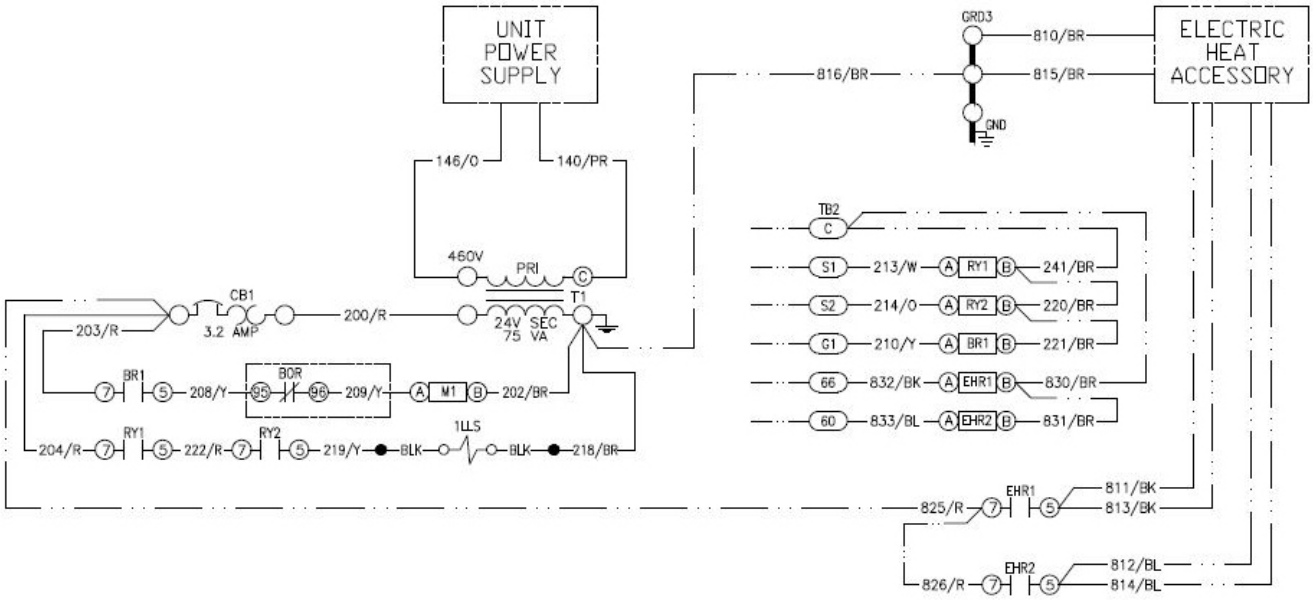

Typical Simplified Field Wiring Diagram – NL120 thru 180 Evaporator

CONDENSER CONTROL BOX

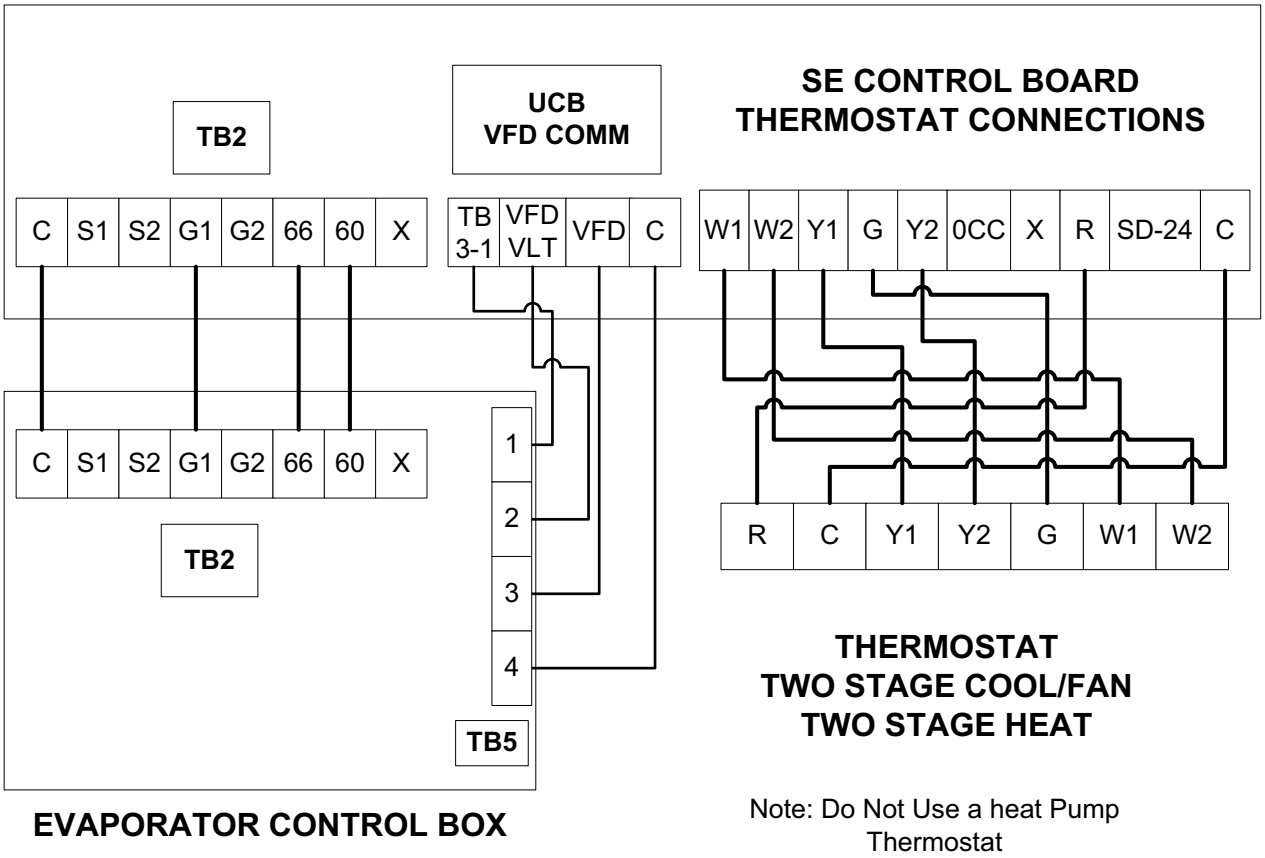

Note: Do Not Use a heat Pump Thermostat

Typical Simplified Field Wiring Diagram – NM180 thru 240 Evaporator with PD180 thru 240 Heat Pump Condenser

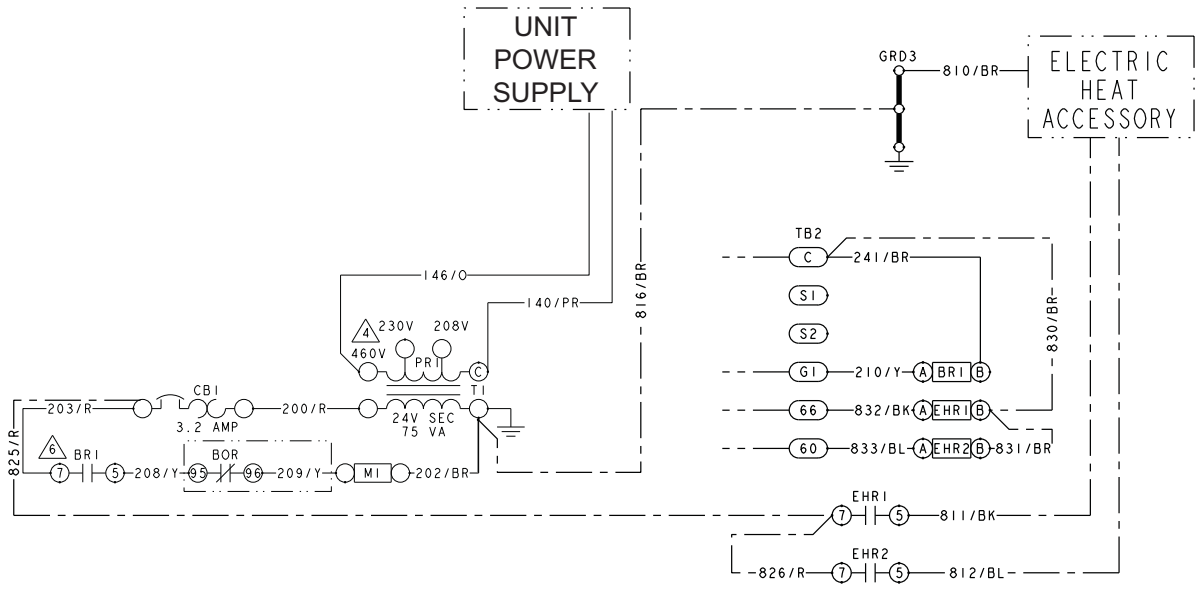

Typical Simplified Field Wiring Diagram – NM180 thru 240 Evaporator

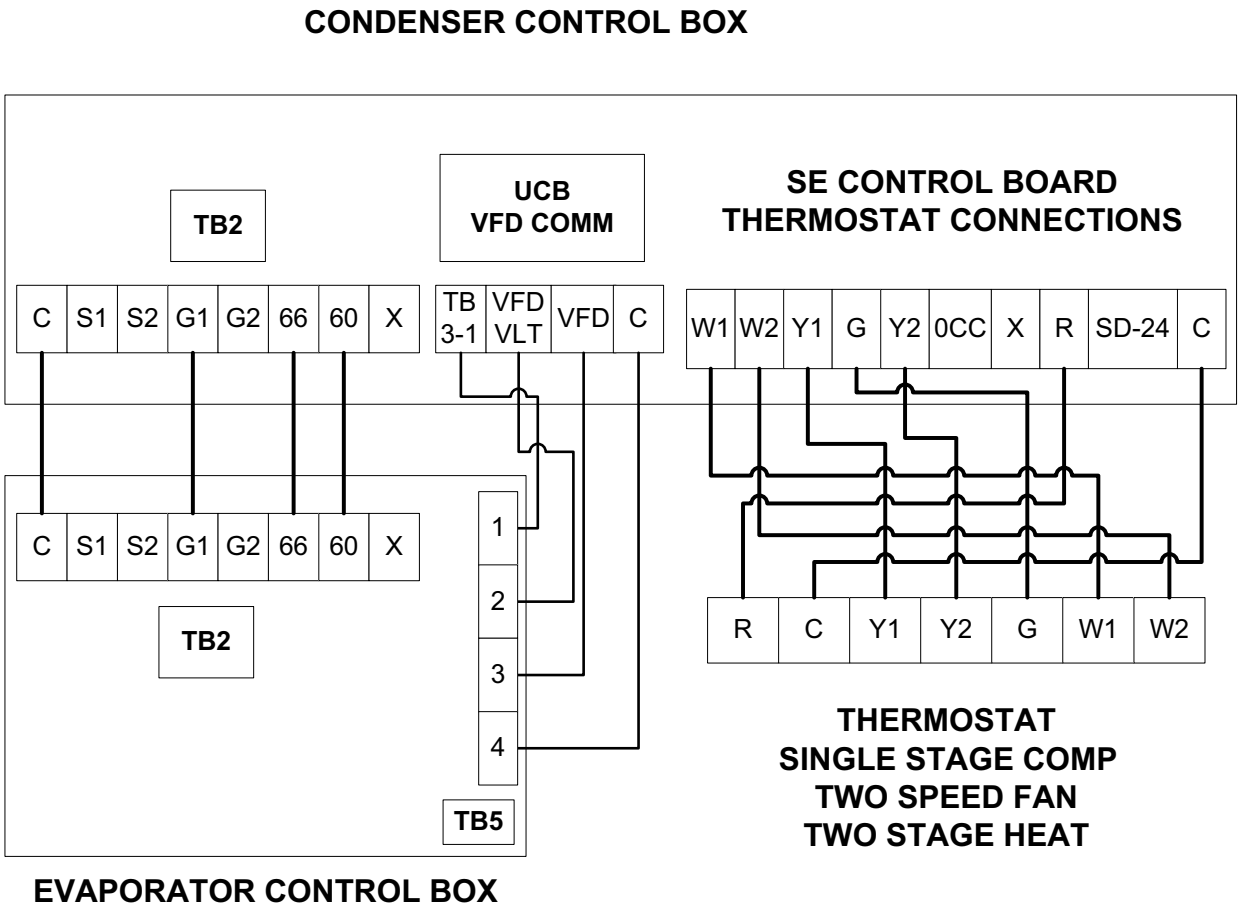

Typical Simplified Field Wiring Diagram – NL090 Evaporator with YC090/YE090 Condenser

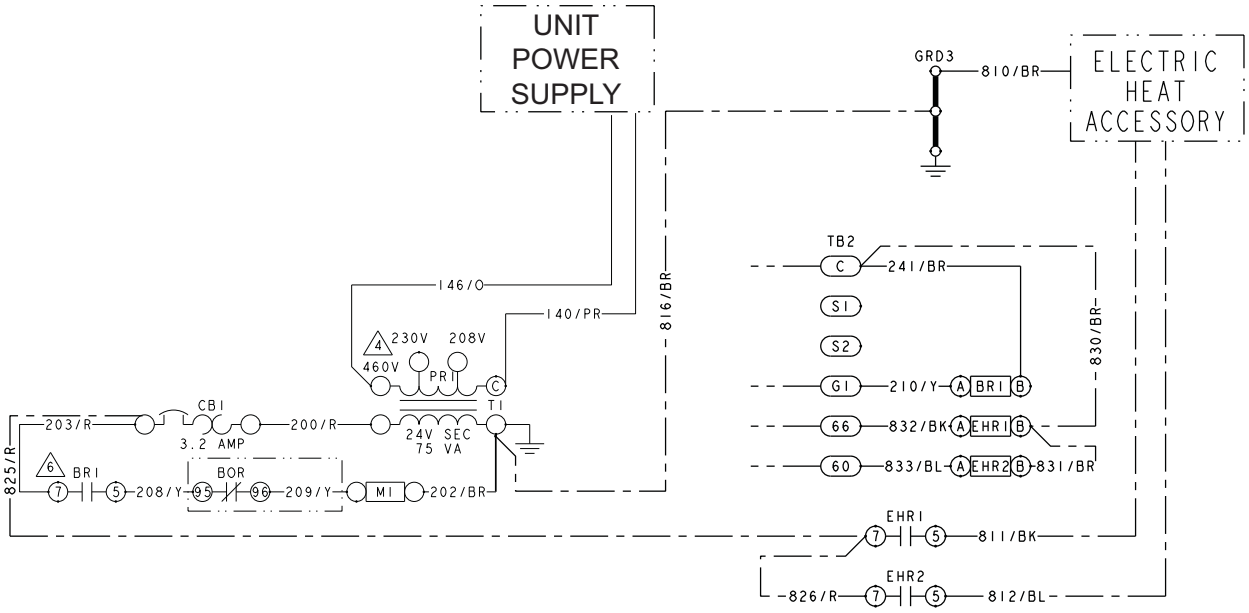

Typical Simplified Field Wiring Diagram – NL090 Evaporator

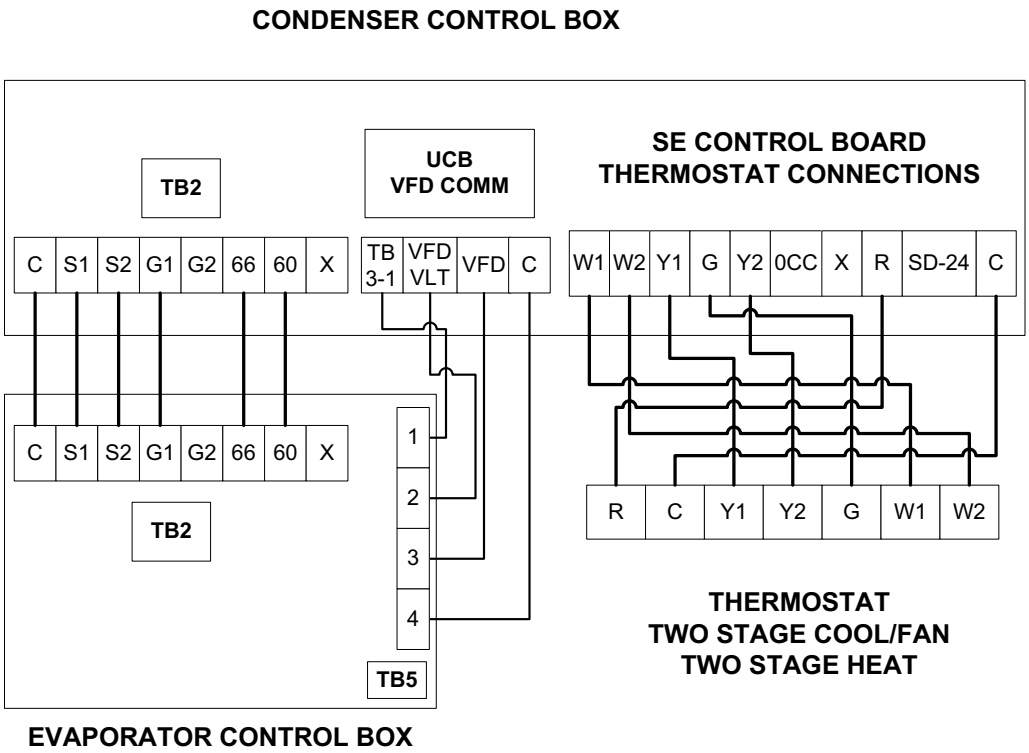

Typical Simplified Field Wiring Diagram – NL120 thru 240 Evaporator with YC120 thru 240 Condenser

Note: On non NL/NM Evaporator models, isolation relays must be installed to avoid overloading on 75 VA transformers on the condensing unit.

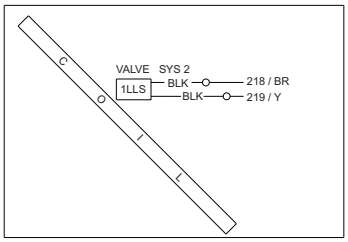

Typical NL120 - 240 Liquid Line Solenoid Wiring

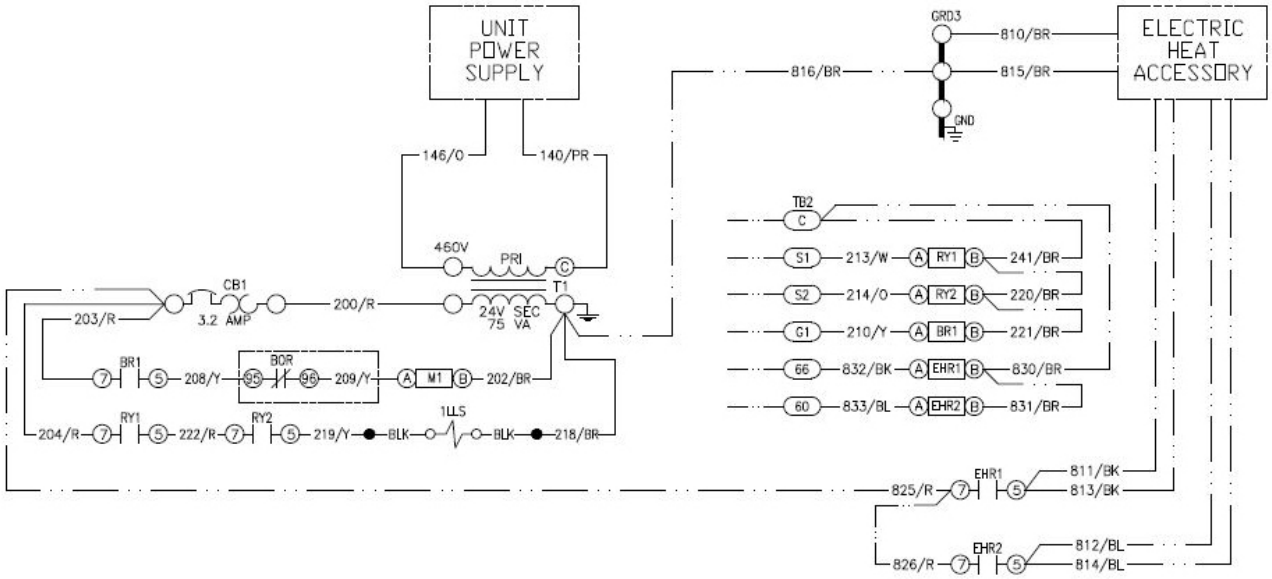

Typical Simplified Field Wiring Diagram – NL120 thru 240 Evaporator

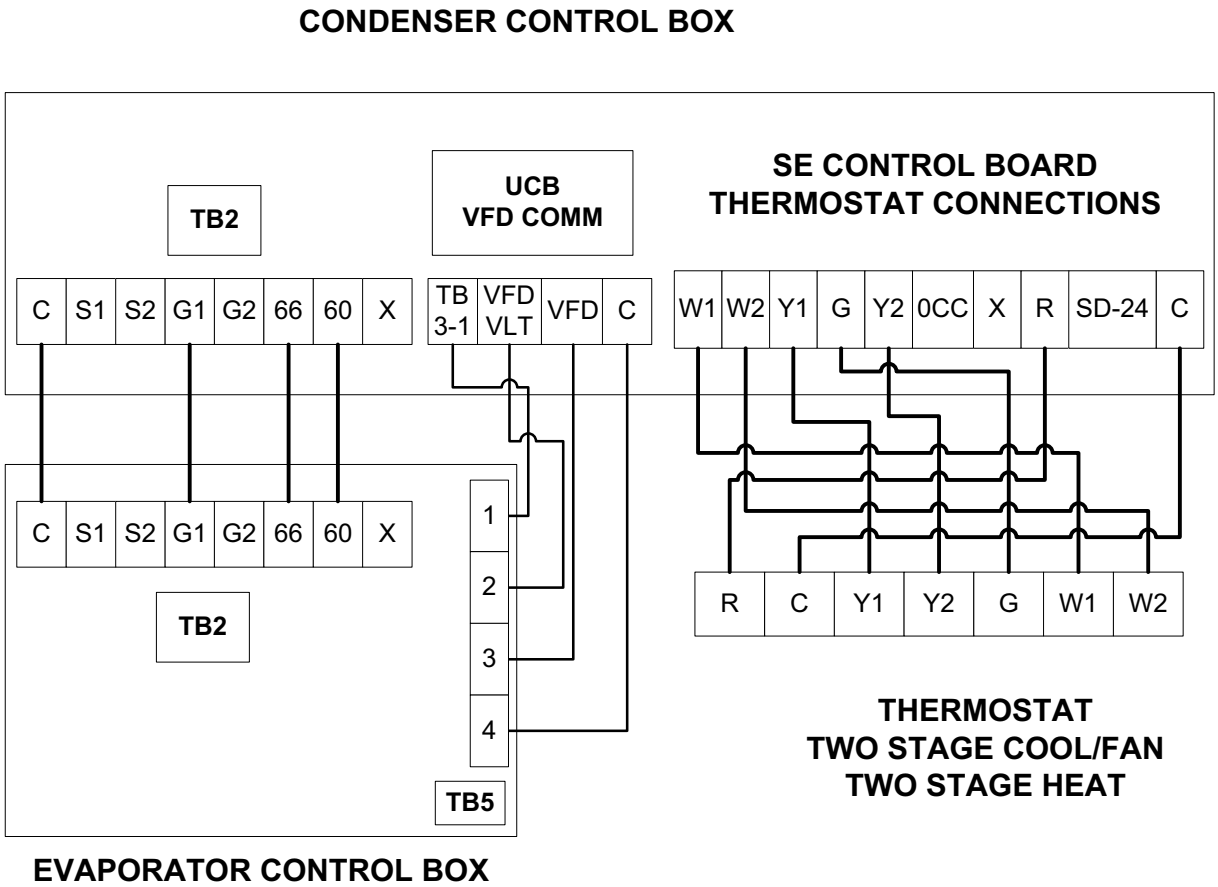

Typical Simplified Field Wiring Diagram – NM120 thru 240 Evaporator with YD120 thru 240 Condenser

Note: On non NL/NM Evaporator models, isolation relays must be installed to avoid overloading on 75 VA transformers on the condensing unit.

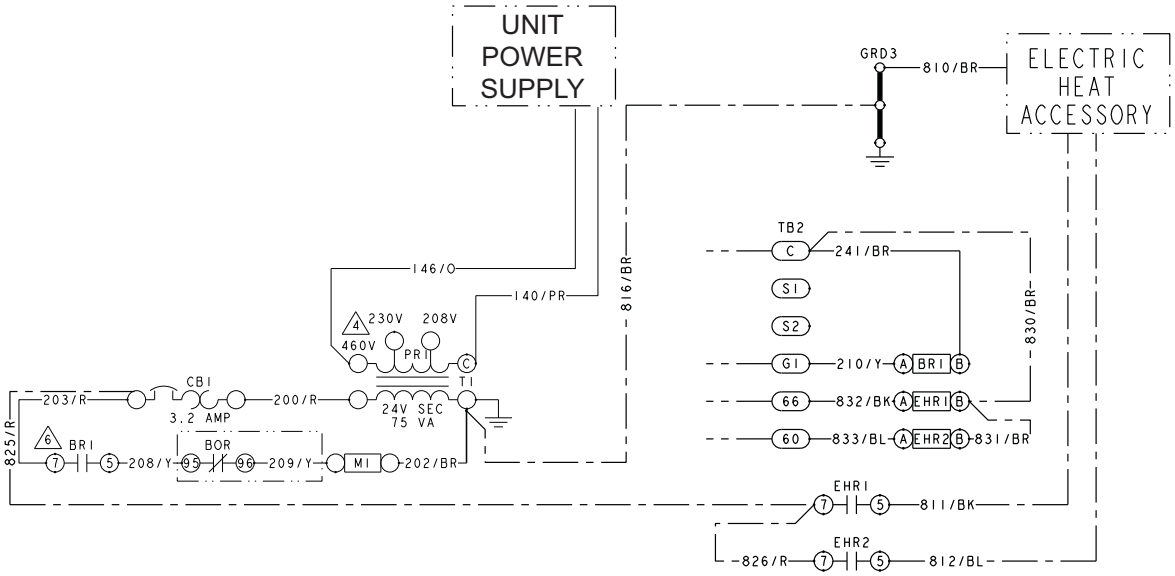

Typical Simplified Field Wiring Diagram – NM120 thru 240 Evaporator

Subject to change without notice. Printed in U.S.A.
Copyright © 2020 by Johnson Controls, Inc. All rights reserved.

505428-YTG-HH-0620
Supersedes: 505428-YTG-GG-0120

York International Corporation
5005 York Drive
Norman, OK 73069