Precautions

1.The vacuum cleaner is an electric appliance that must be used in accordance with the conditions in the Manual. Properly keep the Manual for future reference.
2.Check and confirm that the vacuum cleaner must be used in the same voltage as the supply voltage.
3.Do not handle the following objects, otherwise it may damage the vacuum cleaner or cause fire, resulting in personal injury and other accidents.
A.A hot object, such as carbon fire;
B.Large sharp fragments, such as glass;
C.Harmful objects or water and liquids (solvent and corrodent);
D.Flammable and explosive materials, such as gasoline or alcohol products.
4.Turn off the power when cleaning, repairing, or temporarily not using the vacuum cleaner. When turning off the power, do not pull the power cord. Hold the plastic part of the plug to remove the plug.
5.Do not immerse the main machine of the vacuum cleaner in water to avoid exposure to heaters or blazing sun, and to avoid fire.
6.Children are not allowed to play with the vacuum cleaner, so as to avoid accidents.
7.Do not use the vacuum cleaner in the following situations:
A.Falling and obvious damage or abnormal operation;
B.Damaged power cord.
In this case, do not open the machine but send the machine to the designated maintenance department of the company for maintenance.
8.Avoid long-term operation when the suction inlet is blocked, so as to avoid damage to the motor or the vacuum cleaner deformation caused by heating.
9.The power cord of the product is connected with the motor by Y type. If the power cord is damaged, it must be replaced with special equipment, or repaired by the professional maintenance department.

Product Structure Diagram

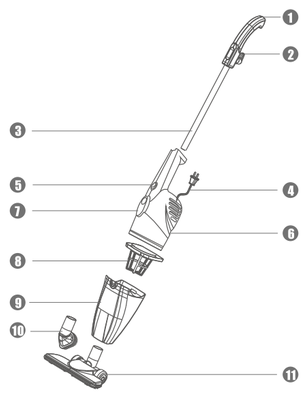

1 Handle
2 Power cord hook
3 Metal tube
4 Power cord
5 Power switch
6 Machine body
7 Dust panel frame switch
8 Strainer
9 Dust panel frame
10 Round brush
11 Ground brush

Circuit Diagram

This diagram is for reference only. No further notice will be issued in case of any change. The product is subject to the real object, and our company reserves all the right for final interpretation.

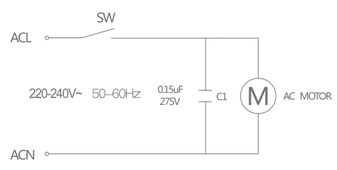

Note:
This manual is carefully checked, in case there is any printing errors or misunderstandings on the content, the company reserves the power of interpretation.

If there is any change in product function, appearance or color, without prior notice, product appearance depends on goods.

Guangdong Deerma Technology Co., Ltd.

Add: No.4-I Longhui Road, Malong Village Committee, Beijiao Town, Shunde District, Foshan City, Guangdong Province, China.

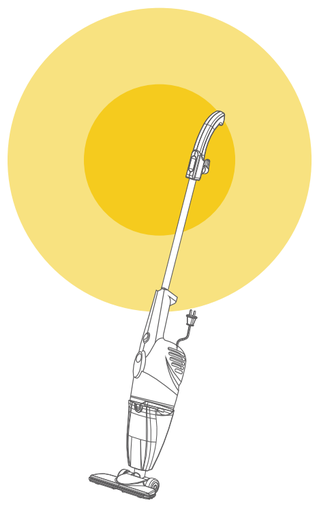

Deerma Vacuum Cleaner

Continuous large suction can take away the dust

It is great at picking up fine dust rapidly and flexibly for each corner.
It is effective storing the dust not backflow to give you a clean living area.

DX118C

Read Instruction manual carefully before use

Application Method

Handle Push Use:

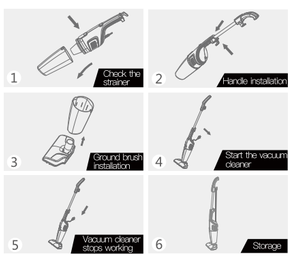

1. Press the dust panel frame switch to open the dust panel frame before use, confirm that the dust panel frame is equipped with the strainers, and then reassemble the dust panel frame. Check that the parts of the body are firmly connected, and set the power switch to "0" (off) gear.
2. Open the buckle at the back of the main machine handle, align the metal tube with the hole in the middle of the handle, insert the metal tube straightly into the bottom, and then clamp the buckle on the handle to the fixed block on the metal tube handle assembly.
3. The ground brush is facing the direction of the power switch of the machine body. Insert the ground brush into the suction inlet and confirm that the connection is secure.
4. Insert the power plug into the socket and confirm that the connection is secure. Put the power switch of the machine body to "1" (ON) gear and the vacuum cleaner starts working.
5. Set the power switch to "0" (OFF) gear, and remove the plug from the socket.
6. Wind the power cord onto the two power cord hooks and place the cleaner upright in the storage area.

Handle Lift Use:

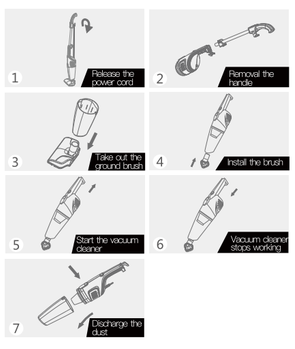

1.Rotate the power cord hooks on the handle to release the power cord quickly.
2.After open the buckle from the fixing block on the metal tube, pull out the metal handle as a whole, and then clamp the buckle to the corresponding position of the main machine handle.
3.Rotate the ground brush slowly and firmly, and remove the ground brush after the ground brush is loosen.
4.Insert the brush nozzle into the suction inlet in the direction of the arrow as shown in Figure (4).
5. Insert the power plug into the socket and confirm that the connection is secure. Put the power switch of the machine body to "1" (ON) gear and the vacuum cleaner starts working.
6. Set the power switch to "0" (OFF) gear, and remove the plug from the socket.
7.Press the dust panel frame switch, take the dust panel frame together with the strainer, and then take out the strainer to put the garbage in the dust panel frame into the waste container.

Product Parameters

Product name	Vacuum cleaner
Product model	DX118C
Rated voltage	220-240V~ 50-60Hz
Rated power	600W
Capacity	1.2L
Vacuum degree	≥15kPa
Noise	≤82dB(A)

Packing List

Name	Quantity
Main machine	1
Ground brush	1
Flat suction mouth	1
Handle	1
Round brush	1
Manual	1

Fault Analysis and Troubleshooting

Note: Cut off the power and unplug the power plug before troubleshooting.

The vacuum cleaner has a reduced suction force and an abnormal sound
Troubleshooting:
Stop working (overheated motor).

Blocked ground brush or suction
Troubleshooting:
Dredge the attachments.

Blocked strainer
Troubleshooting:
Clean or replacethe strainer.

Vacuum cleaner motor does not work
Troubleshooting:
Check whether the plug is securely plugged into the outlet or t he power is on.

The machine stopped working suddenly
Troubleshooting:
Turn off the power switch, unplug the power plug, and after the vacuum cleaner has been cooled for 30 minutes, clean the garbage In the dust panel frame and reuse the machine.

If the problem persists, please contact our special maintenance department for maintenance.

Cleaning and Maintenance

Daily Maintenance
Open the dust panel frame and take out the strainer, wash the strainer with water and let it dry naturally.
Precautions:
1.Clean the strainer at least once a month. When there is obvious accumulation on the strainer, clean it immediately. After washing, dry the strainer before use.
2.Operate the vacuum cleaner with the strainer installed.
3.Before using the vacuum cleaner again, be sure to check whether the strainer is installed or damaged.