Honeywell

SmartLine Pressure Transmitters
ST 700 User's Manual

34-ST-25-44
Revision 14
October 2023

Honeywell Process Solutions

Copyrights, Notices and Trademarks

© Copyright 2023 by Honeywell International Inc.
Revision 14, October 2023

While the information in this document is presented in good faith and believed to be accurate, Honeywell disclaims any implied warranties of merchantability and fitness for a particular purpose and makes no express warranties except as may be stated in the written agreement with and for its customers. In no event is Honeywell liable to anyone for any indirect, special, or consequential damages. The information and specifications in this document are subject to change without notice.

Honeywell, TDC 3000, SmartLine, PlantScape, Experion PKS, and TotalPlant are registered trademarks of Honeywell International Inc. Other brand or product names are trademarks of their respective owners.

Honeywell Process Solutions

2101 City West Blvd

Houston, TX 77042

About This Manual

This manual is a detailed *how to* reference for installing, piping, wiring, configuring, starting up, operating, maintaining, calibrating, and servicing Honeywell's family of ST 700 SmartLine pressure transmitters. Users who have a Honeywell ST 700 SmartLine pressure transmitter configured for HART protocol or Honeywell's Digitally Enhanced (DE) are referred to the *ST 700 Series HART/DE Option User's Manual*, Document # 34-ST-25-47.

Users who have a Honeywell ST 700 SmartLine pressure transmitter configured for Fieldbus operation are referred to the *ST 700 Series Fieldbus Option User's Manual*, Document # 34-ST-25-48.

The configuration of your Transmitter depends on the mode of operation and the options selected for it with respect to operating controls, displays and mechanical installation. This manual provides detailed procedures to assist first-time users, and it further includes keystroke summaries, where appropriate, as quick reference or refreshers for experienced personnel.

To digitally integrate a Transmitter with one of the following systems:

- For the Experion PKS, you will need to supplement the information in this document with the data and procedures in the *Experion Knowledge Builder*.
- For Honeywell's TotalPlant Solutions (TPS), you will need to supplement the information in this document with the data in the *PM/APM SmartLine Transmitter Integration Manual*, which is supplied with the TDC 3000 book set. (TPS is the evolution of the TDC 3000).

Release Information

ST 700 SmartLine Pressure Transmitters User's Manual, 34-ST-25-44

- Revision 1, February 2013.
- Revision 2, May 2013 – Updates to Parts list, Explosionproof Seal class, Fail Safe and Comms Module procedures.
- Revision 3, July 2013 – Control Drawing updated to Rev. D.
- Revision 4, December 2013 – STG73P flush Mount.
- Revision 5, December 2014 – MID and MARINE Approvals added.
- Revision 6, March 2016 – Standard display added.
- Revision 7, May 2016 – Approval updates and EU cert.
- Revision 8, December 2016 – Basic models added.
- Revision 9, September 2017 – Display enhancements to the simple display, Parts list updates.
- Revision 10, November 2018 - EU DECLARATION OF CONFORMITY and Approvals and Control Drawing updated and updated voltage chart.
- Revision 11, June 2020 – Standard display updates - Russian language, Eng and PV units.
- Revision 12, March 2022 – Updates on parts list.

- Revision 13, September 2022 – Updates to standard display menus and punctuation.
- Revision 14, October 2023 –Advanced display added, MC Toolkit replaced with Versatilis Configurator.

References

The following list identifies publications that may contain information relevant to the information in this document.

- *SmartLine Pressure Transmitter ST 800/ST700 Standard Quick Start Guide*, # 34-ST-25-36.
- *ST 800 & ST 700 Pressure Transmitter with HART Safety Manual*, # 34-ST-25-37.
- *ST 700 SmartLine Pressure Transmitter HART/DE Option User's Manual*, # 34-ST-25-47.
- *ST 700 FF Transmitter with FOUNDATION Fieldbus Option Installation & Device Reference Guide, # 34-ST-25-48.*
- *Honeywell Versatilis Configurator User's Manual,* # 34-ST-25-70,
- *PM/APM SmartLine Transmitter Integration Manual*, # PM 12-410.
- *ST 800 & ST 700 Series Pressure, Analog, HART and DE Communications* form, Honeywell drawing 50049892.

Patent Notice

The Honeywell ST 700 SmartLine pressure transmitter family is covered by one or more of the following U. S. Patents: 5,485,753; 5,811,690; 6,041,659; 6,055,633; 7,786,878; 8,073,098; and other patents pending.

Support and Contact Information

For Europe, Asia Pacific, North and South America contact details, refer to the back page of this manual or the appropriate Honeywell Solution Support web site:

Honeywell Corporate https://process.honeywell.com

Honeywell Process Solutions https://process.honeywell.com/remote-meter-assemblies

Telephone and Email Contacts

Area	Organization	Phone Number
United States and Canada	Honeywell International Inc.	1-800-343-0228 Customer Service 1-800-423-9883 Global Technical Support
Global Email Support	Honeywell Process Solutions	hfs-tac-support@honeywell.com

Symbol Descriptions and Definitions

The symbols identified and defined in the following table may appear in this document.

Symbol	Definition
	ATTENTION: Identifies information that requires special consideration.
	TIP: Identifies advice or hints for the user, often in terms of performing a task.
CAUTION	**Indicates a situation which, if not avoided, may result in equipment or work (data) on the system being damaged or lost, or may result in the inability to properly operate the process.**
	CAUTION: Indicates a potentially hazardous situation which, if not avoided, may result in minor or moderate injury. It may also be used to alert against unsafe practices. **CAUTION symbol on the equipment refers the user to the product manual for additional information. The symbol appears next to required information in the manual.**
	WARNING: Indicates a potentially hazardous situation, which, if not avoided, could result in serious injury or death. **WARNING symbol on the equipment refers the user to the product manual for additional information. The symbol appears next to required information in the manual.**
	WARNING, Risk of electrical shock: Potential shock hazard where HAZARDOUS LIVE voltages greater than 30 Vrms, 42.4 Vpeak, or 60 VDC may be accessible.
	ESD HAZARD: Danger of an electro-static discharge to which equipment may be sensitive. Observe precautions for handling electrostatic sensitive devices.
	Protective Earth (PE) terminal: Provided for connection of the protective earth (green or green/yellow) supply system conductor.
	Functional earth terminal: Used for non-safety purposes such as noise immunity improvement. Note: This connection shall be bonded to Protective Earth at the source of supply in accordance with national local electrical code requirements.
	Earth Ground: Functional earth connection. Note: This connection shall be bonded to Protective Earth at the source of supply in accordance with national and local electrical code requirements.
	Chassis Ground: Identifies a connection to the chassis or frame of the equipment shall be bonded to Protective Earth at the source of supply in accordance with national and local electrical code requirements.
continued	

Symbol	Description
FM APPROVED	The Factory Mutual®: Approval mark means the equipment has been rigorously tested and certified to be reliable.
CSA®	The Canadian Standards mark means the equipment has been tested and meets applicable standards for safety and/or performance.
Ex	The Ex mark means the equipment complies with the requirements of the European standards that are harmonized with the 94/9/EC Directive (ATEX Directive, named after the French "ATmosphere EXplosible").

Contents

1 ST 700 Transmitter Series ... 1
1.1 Overview ... 1
2 Introduction to the ST 700 Standard Transmitter ... 3
2.1 Features and Options ... 3
2.1.1 Physical Characteristics ... 4
2.1.2 Functional Characteristics ... 5
2.2 ST 700 Standard Transmitter Nameplate ... 5
2.3 Safety Certification Information ... 6
2.4 Transmitter Adjustments ... 6
2.5 Display Options – Standard Display ... 6
2.6 Optional Integrated Two-Button Assembly (Standard Display) ... 7
3 Application Design for the ST 700 Standard Transmitter ... 8
3.1 Overview ... 8
3.2 Accuracy ... 8
3.2.1 Diagnostic Messages ... 8
3.3 Safety ... 9
3.3.1 Safety Integrity Level (SIL) ... 9
4 Installation and Startup for the ST 700 Standard Transmitter ... 10
4.1 Installation Site Evaluation ... 10
4.2 Honeywell Versatilis Configurator ... 10
4.3 Display Installation Precautions ... 11
4.4 Mounting – ST 700 Standard Transmitter ... 12
4.4.1 Summary ... 12
4.4.2 Flush mounting – ST 700 Standard Transmitter ... 12
4.4.3 Mounting Dimensions ... 13
4.4.4 Bracket Mounting Procedure ... 14
4.4.5 Mounting Transmitters with Small Absolute or Differential Pressure Spans ... 16
4.4.6 Flange Mounting ... 17
4.4.7 Remote Diaphragm Seal Mounting Information ... 18
4.5 Piping the ST 700 Standard Transmitter ... 19
4.5.1 Piping Arrangements ... 19
4.5.2 Transmitter Location ... 20
4.5.3 General Piping Guidelines ... 20
4.5.4 Procedure to Install Flange Adapters ... 20
4.6 Wiring the ST 700 Standard Transmitter ... 21
4.6.1 Overview ... 21
4.6.2 Digital System Integration Information ... 23
4.6.3 Wiring Variations ... 23
4.6.4 Wiring Procedure ... 23
4.6.5 Lightning Protection ... 23
4.6.6 Supply Voltage Limiting Requirements ... 24
4.6.7 Process Sealing ... 24
4.6.8 Explosion-Proof Conduit Seal ... 24
4.7 Startup – ST 700 Standard Transmitter ... 25
4.7.1 Overview ... 25
4.7.2 Startup Tasks ... 25
4.7.3 Output Check Procedures ... 25
4.7.4 Constant Current Source Mode Procedure ... 26
5 Operation – ST 700 Standard Transmitter ... 27

5.1 Overview ... 27
5.2 Three-Button Operation ... 27
5.2.1 Menu Navigation ... 28
5.2.2 Data Entry ... 29
5.2.3 Editing a Numeric Value ... 29
5.2.4 Selecting a new setting from a list of choices ... 29
5.2.5 The Advanced Display Menus ... 30
5.2.6 The Basic Display Menu ... 45
5.2.7 Data Entry ... 49
5.2.8 Editing a Numeric value ... 49
5.2.9 Selecting a new setting from a list of choices ... 49
5.3 Two-Button Operation ... 50
5.3.1 The Standard Display Menu ... 50
5.3.2 Standard Display Abbreviations: ... 69
5.3.3 Data Entry ... 70
5.3.4 Editing a Numeric value ... 70
5.3.5 Selecting a new setting from a list of choices ... 70
5.4 Basic and Standard Display Operations ... 71
5.4.1 Editing a Numeric value ... 71
5.4.2 Selecting a new setting from a list of choices ... 71
5.5 Three-Button Operation with no Display Installed ... 72
5.5.1 Zero Adjustment ... 72
5.5.2 Span Adjustment ... 72
5.6 Changing the Default Failsafe Direction ... 73
5.6.1 DE and Analog Differences ... 73
5.6.2 Procedure to Establish Failsafe Operation ... 73
5.7 Monitoring the Standard Display for the ST 700 Standard Transmitter ... 76
5.7.1 Standard Display – ST 700 Standard Transmitter ... 76
6 Maintenance – ST 700 Standard Transmitter ... 77
6.1 Overview ... 77
6.2 Preventive Maintenance Practices and Schedules ... 77
6.3 Inspecting and Cleaning Barrier Diaphragms ... 77
6.4 Replacing the Meter Body ... 81
7 Calibration for the ST 700 Standard Transmitter ... 86
7.1 Recommendations for Transmitter Calibration ... 86
7.2 Calibration Procedures ... 86
8 Troubleshooting on the ST 700 Standard Transmitter ... 87
8.1 Overview ... 87
8.2 Critical Diagnostics Screens ... 87
8.2.1 Fault Conditions and Recommended Corrective Actions – Basic Display ... 87
8.2.2 Fault Conditions and Recommended Corrective Actions – Standard Display ... 88
9 Parts List – ST 700 Standard Transmitter ... 89
9.1 Overview ... 89
10 Introduction – ST 700 Basic Transmitter ... 105
10.1 Overview ... 105
10.2 Features and Options ... 105
10.2.1 Physical Characteristics ... 109
10.2.2 Functional Characteristics ... 110
10.3 ST 700 Transmitter Nameplate ... 110
10.4 Safety Certification Information ... 111
10.5 Transmitter Adjustments ... 111

10.6 Display Options – Standard Display ... 111
10.7 Optional Integrated Two-Button Assembly (Standard Display) ... 112
11 Application Design – ST 700 Basic Transmitter ... 113
11.1 Overview ... 113
11.2 Accuracy ... 113
11.2.1 Diagnostic Messages ... 113
11.3 Safety ... 113
11.3.1 Safety Integrity Level (SIL) ... 113
12 Installation and Startup – ST 700 Basic Transmitter ... 114
12.1 Installation Site Evaluation ... 114
12.2 Honeywell Versatilis Configurator ... 114
12.3 Display Installation Precautions ... 114
12.4 Mounting – ST 700 Basic Transmitter ... 115
12.4.1 Summary ... 115
12.5 Flush mounting – ST 700 Basic Transmitter ... 116
12.5.1 Mounting Dimensions for ST 700 Basic Transmitter ... 116
12.5.2 Bracket Mounting Procedure for ST 700 Basic Transmitter ... 117
12.5.3 Mounting Transmitters with Small Absolute or Differential Pressure Spans ... 119
12.5.4 Flange Mounting – ST 700 Basic Transmitter ... 120
12.5.5 Remote Diaphragm Seal Mounting Information – ST 700 Basic Transmitter ... 121
12.6 Piping the ST 700 Basic Transmitter ... 122
12.6.1 Piping Arrangements ... 122
12.6.2 Suggestions for Transmitter Location ... 123
12.6.3 General Piping Guidelines ... 123
12.6.4 Procedure to Install Flange Adapters ... 124
12.7 Wiring an ST 700 Basic Transmitter ... 125
12.7.1 Overview ... 125
12.7.2 Digital System Integration Information ... 127
12.7.3 Wiring Variations ... 127
12.7.4 Wiring Procedure ... 127
12.7.5 Lightning Protection ... 127
12.7.6 Supply Voltage Limiting Requirements ... 128
12.7.7 Process Sealing ... 128
12.7.8 Explosion-Proof Conduit Seal ... 128
12.8 Startup ... 128
12.8.1 Overview ... 128
12.8.2 Startup Tasks ... 128
12.8.3 Output Check Procedures ... 129
12.8.4 Constant Current Source Mode Procedure ... 129
13 Operation – ST 700 Basic Transmitter ... 131
13.1 Overview ... 131
13.2 External Two-Button Operation ... 131
13.2.1 The Standard Display Menu ... 133
13.2.2 Standard Display Abbreviations ... 169
13.2.3 Data Entry ... 170
13.2.4 Editing a Numeric value ... 171
13.2.5 Selecting a new setting from a list of choices ... 171
13.3 Two-Button Operation with no Display Installed ... 171
13.3.1 Zero Adjustment ... 171
13.3.2 Span Adjustment ... 171
13.3.3 Zero Correction ... 172

13.4 Changing the Default Failsafe Direction ... 172
13.4.1 Procedure to Establish Failsafe Operation ... 172
13.5 Monitoring the Standard Display ... 175
13.5.1 Standard Display ... 175
14 Maintenance – ST 700 Basic Transmitter ... 176
14.1 Overview ... 176
14.2 Preventive Maintenance Practices and Schedules ... 176
14.3 Inspecting and Cleaning Barrier Diaphragms ... 176
14.4 Replacing the Communication Module ... 179
14.5 Replacing the Meter Body ... 181
15 Calibration – ST 700 Basic Transmitter ... 185
15.1 Recommendations for Transmitter Calibration ... 185
15.2 Calibration Procedures ... 185
16 Troubleshooting – ST 700 Basic Transmitter ... 186
16.1 Overview ... 186
16.2 Critical Diagnostics Screens ... 186
16.2.1 Fault Conditions and Recommended Corrective Actions – Standard Display ... 186
17 Parts List – ST 700 Basic Transmitter ... 187
17.1 Overview ... 187
Appendix A - PRODUCT CERTIFICATIONS for the ST 700 Standard and Basic Transmitter ... 202
A.1 Safety Instrumented Systems (SIS) Installations ... 202
A.2 European Directive Information (CE Mark) ... 202
Glossary ... 221

List of Figures

Figure 1 – ST 700 Standard Transmitter Major Assemblies 4
Figure 2 – ST 700 Standard Transmitter Electronics Housing Components 4
Figure 3 – ST 700 Standard Transmitter - Typical Name Plate 5
Figure 4 – ST 700 Standard Transmitter - Typical Bracket and Flange Mounted Installations 12
Figure 5 - ST 700 Standard Transmitter - Typical Flush Mounted Installation 13
Figure 6 – ST 700 Standard Transmitter - Angle Mounting Bracket Secured to a Horizontal or Vertical Pipe 14
Figure 7 – ST 700 Standard Transmitter - Inline Model Mounted to an Optional Bracket 15
Figure 8 – ST 700 Standard Transmitter - Rotating the Electronics Housing 15
Figure 9 – ST 700 Standard Transmitter - Using a Spirit Balance to Level a Transmitter 16
Figure 10 – ST 700 Standard Transmitter - Tank-Flange Mounted Transmitter 17
Figure 11 – ST 700 Standard Transmitter - Representative Remote Diaphragm Seal Transmitter Installation18
Figure 12 – ST 700 Standard Transmitter - Typical 3-Valve Manifold with Blow-Down Piping 19
Figure 13 – ST 700 Standard Transmitter - Flange Adapter Removal and Replacement 21
Figure 14 – ST 700 Standard Transmitter – Operating Ranges 21
Figure 15 – ST 700 Standard Transmitter - 3-Screw Terminal Board and Grounding Screw 22
Figure 16 – ST 700 Standard Transmitter - Current Loop Test Connections 26
Figure 17 – ST 700 Standard Transmitter - Three-Button Option 27
Figure 18 – ST 700 Standard Transmitter - Two-Button Option 50
Figure 19 – ST 700 Standard Transmitter - Locating the Failsafe and Write Protect Jumpers 74
Figure 20 – ST 700 Standard Transmitter - Standard Display with Process Variable Format 76
Figure 21 – ST 700 Standard Transmitter - DP Transmitter Head Disassembly 78
Figure 22 – ST 700 Standard Transmitter - Head Bolt Tightening Sequence 79
Figure 23 – ST 700 Standard Transmitter - PWA Replacement 80
Figure 24 – ST 700 Standard Transmitter - Disassembly for Meter Body Replacement 82
Figure 25 – ST 700 Standard Transmitter - Hardware Location to Remove the Meter Assembly 83
Figure 26 – ST 700 Standard Transmitter - Meter Body Reassembly 84
Figure 27 – ST 700 Standard Transmitter - Head Bolt Tightening Sequence 84
Figure 28 – ST 700 Standard Transmitter - Angle and Flat Bracket Parts 90
Figure 29 – ST 700 Standard Transmitter - Electronic Housing, Display End 91
Figure 30 – ST 700 Standard Transmitter - Electronic Housing, Terminal Block End 93
Figure 31 – ST 700 Standard Transmitter - Major Assemblies 94
Figure 32 - ST 700 Standard Transmitter - ST 700 Models STD720, 730, 770 97
Figure 33 – ST 700 Standard Transmitter - STG730, 740, 770 and STA722, ... 100
Figure 34 – ST 700 Standard Transmitter - Inline Gauge and Inline Atmospheric Meter Body Bodies 101
Figure 35 – ST 700 Standard Transmitter - Extended Flange Design 102
Figure 36 - ST 700 Standard Transmitter - Flush Flange Design 102
Figure 37 - ST 700 Standard Transmitter - Pseudo Flange Design 103
Figure 38 – ST 700 Standard Transmitter - Remote Seal Diaphragm 103
Figure 39 - ST 700 Standard Transmitter - Flush Mount Meter Body. 104
Figure 40 – ST 700 Basic Transmitter - Major Assemblies 109
Figure 41 – ST 700 Basic transmitter Electronics Housing Components 109
Figure 42 – ST 700 Basic Transmitter - Name Plate 110
Figure 43 – ST 700 Basic Transmitter - Typical Bracket Mounted and Flange Mounted Installations 115
Figure 44 - ST 700 Basic Transmitter – Typical Flush Mounted Transmitter Installation 116
Figure 45 – ST 700 Basic Transmitter – Angle Mounting Bracket Secured to a Horizontal or Vertical Pipe . 117
Figure 46 – ST 700 Basic Transmitter – Inline Model Mounted to an Optional Bracket 118
Figure 47 – ST 700 Basic Transmitter - Rotating the Electronics Housing 118
Figure 48 – ST 700 Basic Transmitter, using a Spirit Balance to Level a Transmitter 119
Figure 49 – ST 700 Basic Transmitter, Tank-Flange Mounted Transmitter 120
Figure 50 – ST 700 Basic Transmitter - Representative Remote Diaphragm Seal Transmitter Installation .. 121
Figure 51– ST 700 Basic Transmitter - Typical 3-Valve Manifold with Blow- Down Piping 122

Figure 52 – ST 700 Basic Transmitter - Flange Adapter Removal and Replacement 124
Figure 53 – ST 700 Basic Transmitter - Operating Ranges 125
Figure 54 – ST 700 Basic Transmitter - 3-Screw Terminal Board and Grounding Screw 126
Figure 55 – ST 700 Basic Transmitter - Current Loop Test Connections 129
Figure 56 – ST 700 Basic Transmitter - Two-Button Option 131
Figure 57 – ST 700 Basic Transmitter - Two-Button Option 132
Figure 58 – ST 700 Basic Transmitter - Locating the Failsafe and Write Protect Jumpers 173
Figure 59 – ST 700 Basic Transmitter - Standard Display with Process Variable Format 175
Figure 60 – ST 700 Basic Transmitter - DP Transmitter Head Disassembly 177
Figure 61 – ST 700 Basic Transmitter - Head Bolt Tightening Sequence 178
Figure 62 – ST 700 Basic Transmitter - PWA Replacement 179
Figure 63 – ST 700 Basic Transmitter - Disassembly for Meter Body Replacement 181
Figure 64 – ST 700 Basic Transmitter - Hardware Location to Remove the Meter Assembly 182
Figure 65 – ST 700 Basic Transmitter - Meter Body Reassembly 183
Figure 66 – ST 700 Basic Transmitter - Head Bolt Tightening Sequence 183
Figure 67 – ST 700 Basic Transmitter - Angle and Flat Bracket Parts 188
Figure 68 – ST 700 Basic Transmitter - Electronic Housing, Display End 190
Figure 69 – ST 700 Basic Transmitter – Electronic Housing, Terminal Block End 191
Figure 70 – ST 700 Basic Transmitter - Major Assemblies 192
Figure 71 - ST 700 Basic Transmitter Models STD725, 735, 775 195
Figure 72 – ST 700 Basic Transmitter - STG735, 745, 775 and STA725, 745 Transmitter Body 197
Figure 73 – ST 700 Basic Transmitter - Inline Gauge and Inline Atmospheric Meter Body Bodies 198
Figure 74 – ST 700 Basic Transmitter - Extended Flange Design 199
Figure 75 - ST 700 Basic Transmitter - Flush Flange Design 199
Figure 76 – ST 700 Basic Transmitter - Pseudo Flange Design 200
Figure 77 – ST 700 Basic Transmitter - Remote Seal Diaphragm 200
Figure 78 - ST 700 Basic Transmitter - Series 700 Flush Mount Meter Body. 201

List of Tables

Table 1 – ST 700 Standard and Basic model types 2
Table 2 – Features and Options - ST 700 Standard Transmitter 3
Table 3– Available Display Characteristics 6
Table 4 – ST 700 Standard transmitter - Basic Display Diagnostics Messages 9
Table 5 - ST 700 Standard Transmitter - Mounting Bracket procedure 14
Table 6 – ST 700 Standard Transmitter - Flange Mounting Guidelines 18
Table 7 – ST 700 Standard Transmitter - Remote Diaphragm Mounting Details 18
Table 8 – ST 700 Standard Transmitter - Suggested Connection Locations 20
Table 9 – Three-Button Option Functions 28
Table 10 – Three-Button Data Entry 29
Table 11 – Advanced Display Main Menu Structure 30
Table 12 – Diagnostics Menu 31
Table 13 – Display Setup Menus 33
Table 14 – Calibration Menus 38
Table 15 – Transmitter Setup Menus 41
Table 16 – Information Menus 45
Table 17 – The Basic Display Menu 46
Table 18 – Three-Button Data Entry 49
Table 19 – ST 700 Standard Transmitter: Standard Display Menu 51
Table 20 – ST 700 Basic Transmitter - The Standard Display abbreviations 69
Table 21 –Two-Button Data Entry 70
Table 22 – ST 700 Standard Transmitter - HART and DE Failsafe and Write Protect Jumpers 74
Table 23 – ST 700 Standard Transmitter - Fieldbus Simulation and Write Protect Jumpers 75
Table 24 – Head Bolt Torque Values 79
Table 25 – ST 700 Standard Transmitter - Fault Conditions and Recommended Corrective Actions for basic Display 87
Table 26 – ST 700 Standard Transmitter - Fault Conditions and Recommended Corrective Actions 88
Table 27 – ST 700 Standard Transmitter - Summary List of Recommended Spare Parts 89
Table 28 – ST 700 Standard Transmitter - Angle and Flat Bracket Parts 91
Table 29 – ST 700 Standard Transmitter Major Assemblies 92
Table 30 – ST 700 Standard Transmitter Models STD720, 730 & 770 95
Table 31 – ST 700 Standard Transmitter - Parts for STG730, 740, 770 and STD720, 730, 770 and STA722, 740 Transmitter Body 98
Table 32 - ST 700 Standard Transmitter - Inline Gauge and Inline Atmospheric Meter Body Parts 101
Table 33 – ST 700 Standard Transmitter - Flange-Mounted Meter Body Parts – STF724, 732 102
Table 34 – ST 700 Standard Transmitter - Flush Mount Meter Body Parts 104
Table 35 – ST 700 Basic Transmitter - Features and Options 105
Table 36 – ST 700 Basic Transmitter - Available Display Characteristics 111
Table 37 – ST 700 Basic Transmitter - Mounting Bracket procedure 117
Table 38 – ST 700 Basic Transmitter, Flange Mounting Guidelines 121
Table 39 – ST 700 Basic Transmitter - Remote Diaphragm Mounting Details 121
Table 40 – ST 700 Basic Transmitter - Suggested Connection Locations 123
Table 41 – ST 700 Basic Transmitter: Standard Display Menu English Language 134
Table 42 - ST 700 Standard Transmitter: Standard Display Menus Russian Language 152
Table 43 – The Standard Display abbreviations 169
Table 44 – ST 700 Basic Transmitter - Two-Button Data Entry 170
Table 45 – ST 700 Basic Transmitter - HART Failsafe and Write Protect Jumpers 174
Table 46 – Head Bolt Torque Values 178
Table 47 – ST 700 Basic Transmitter - Fault Conditions and Recommended Corrective Actions. 186
Table 48 – ST 700 Basic Transmitter - Summary List of Recommended Spare Parts 187
Table 49 – ST 700 Basic Transmitter - Angle and Flat Bracket Parts 189

Table 50 – ST 700 Basic Transmitter - Major Assemblies 190
Table 51 – ST 700 Basic Transmitter STG735, 745, 775, STD 725, 735, 775 & STA725 & 745, Transmitter Body. 193
Table 52– ST 700 Basic Transmitter – Parts for STG725, 735, 745, 775, 745 Transmitter Body 196
Table 53 - ST 700 Basic Transmitter – Inline Gauge and Inline Atmospheric Meter Body Parts..... 198
Table 54 – ST 700 Basic Transmitter - Flange-Mounted Meter Body Parts 199
Table 55 – ST 700 Basic Transmitter - Flush Mount Meter Body Parts 201

1 ST 700 Transmitter Series

1.1 Overview

SmartLine pressure transmitter ST 700 family consists of a series of ST 700 standard transmitter models and a series of ST 700 basic transmitter models.

Note: The entire manual is broadly classified in two sections for standard and basic transmitters. Which type of transmitter do I have?
To determine which version you have:
Look at the nameplate on top of the unit shown in Figure 3. Refer to the model number
If you have a ST 700 standard transmitter, use sections **2** through **9**.
If you have a ST 700 basic transmitter, use sections **10** through **17.**
Appendix A - PRODUCT CERTIFICATIONS is applicable for both ST 700 standard and basic transmitters.

Table 1 below to identify which type of transmitter you have; standard or basic.

The standard transmitter will have a three-button assembly (see Figure 17), and the basic transmitter with have a two-button assembly (see Figure 18).

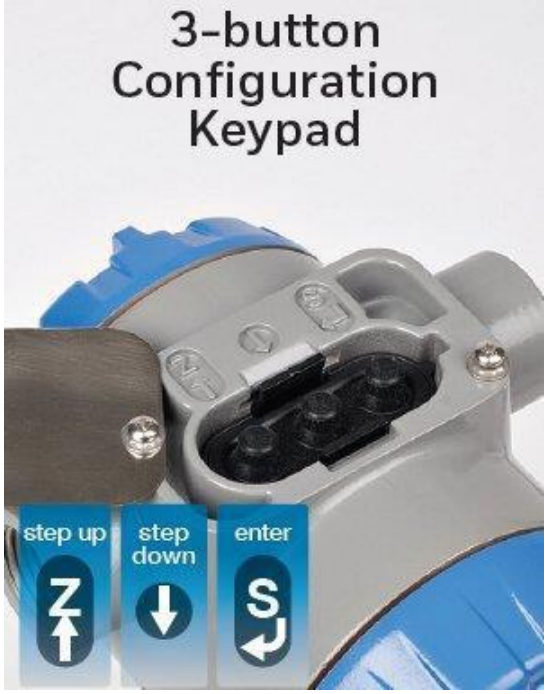

3-button Standard ST 700 Transmitter

2-button Basic ST 700 Transmitter

Table 1 – ST 700 Standard and Basic model types

	SmartLine Pressure ST 700	
Transmitter Configuration	**Standard Models**	**Basic Models**
Dual head DP	STD720/730/770	STD725/735/775
Dual head GP	STG730/740/770	STG735/745/775
Inline GP	STG73L/74L/77L/78L/79L	STG73S/74S/77S/78S/79S
Inline flush GP	STG73P	STG73SP
Dual head AP	STA722/740	STA725/745
Inline AP	STA72L/74L/77L	STA72S/74S/77S
Flush flanged level	STF724/732	STF725/735
Pseudo flanged level	STF72F/73F	STF72P/73P
Remote seal DP/GP	STR73D/74G	STR735D/745G

2 Introduction to the ST 700 Standard Transmitter

This section is an introduction to the physical and functional characteristics Honeywell's family of the ST 700 Standard transmitters.

2.1 Features and Options

The ST 700 standard transmitter is available in a variety of models for measuring Differential Pressure (DP), Gauge Pressure (GP), and Absolute Pressure (AP). Table 2 lists the protocols, human interface (HMI), materials, approvals, and mounting bracket options.

Table 2 – Features and Options - ST 700 Standard Transmitter

Feature/Option	Standard/Available Options
Communication Protocols	HART® version 7, Digitally Enhanced (DE), Fieldbus
Display Options (Basic, Standard and Advanced)	**Basic Display** • Three-button programming (optional) • Languages: English only
	Standard Display (HART® only) • Two integral buttons programming (optional) • Languages: English and Russian Two-mode operations: PV display and Menu Navigation
	Advanced Display • Three-button programming (optional) • Languages: English, German, French, Italian, Spanish, Turkish, Russian, Chinese, and Japanese
Calibration	Single Calibration Set
Approvals See Appendix A for details	FM, CSA, ATEX, IECEx, SAEx, INMETRO, NEPSI, EAC, KOSHA
Mounting Brackets	Angle/flat carbon steel/304 and 316 stainless steel, Marine 304 stainless steel, 316 Stainless Steel.
Integration Tools	Experion

	The three-button option is available for the advanced and basic displays. The two-button option is available for the standard display. Also, for the advanced and basic displays, the two-button option is used only for span and zero correction and not for display navigation.

2.1.1 Physical Characteristics

As shown in Figure 1, the ST 700 standard is packaged in two major assemblies: the electronics housing and the meter body. The elements in the electronic housing respond to setup commands and execute the software and protocol for the different pressure measurement types. Figure 2 shows the assemblies in the electronics housing with available options.

The meter body provides connection to a process system. Several physical interface configurations are available, as determined by the mounting and mechanical connections, all of which are described in the **Installation** section of this manual.

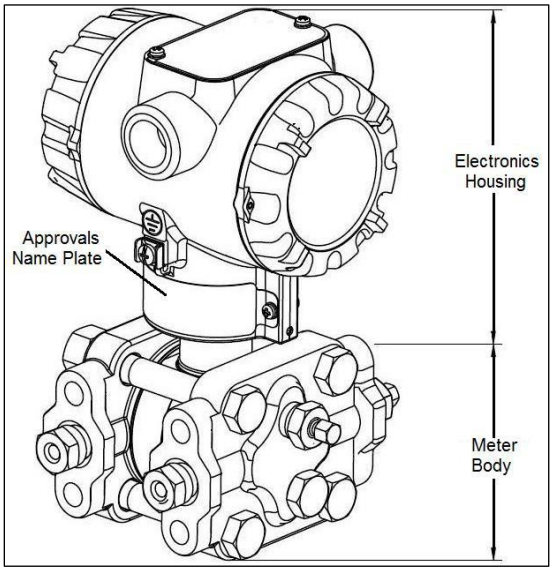

Figure 1 – ST 700 Standard Transmitter Major Assemblies

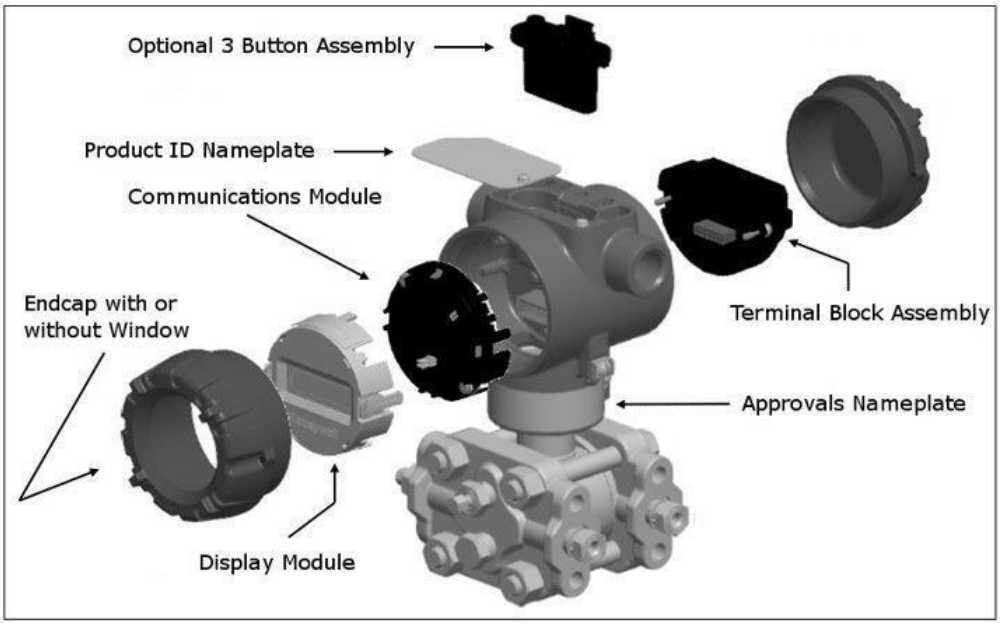

Figure 2 – ST 700 Standard Transmitter Electronics Housing Components

2.1.2 Functional Characteristics

The ST 700 standard transmitter measures process pressure and provides a proportional analog 4 to 20mA output to the measured process variable (PV). Available output communication protocols include Honeywell Digitally Enhanced (DE), HART®, and FOUNDATION™ Fieldbus.

The standard display is only available on HART transmitters.

An optional three-button assembly is available to set up and make adjustments to the transmitter. In addition, the Honeywell Versatilis Configurator (not supplied with the transmitter) can facilitate setup and adjustment procedures. Certain adjustments can be made through an Experion Station or a Universal Station if the transmitter is digitally integrated with Honeywell's Experion or TPS/TDC 3000 control system.

The standard display menu is implemented as one long single-level menu and will "wrap around" when it reaches the start or end of the menu. The standard display uses an optional two-button assembly to set up and make adjustments to the transmitter.

2.2 ST 700 Standard Transmitter Nameplate

The transmitter nameplate mounted on the bottom of the electronics housing (see Figure 1) lists its model number, physical configuration, electronics options, accessories, certifications, and manufacturing specialties. Figure 3 is an example of a typical Gauge Pressure (GP) or Atmospheric Pressure (AP) transmitter name plate. The model number format consists of a Key Number with several table selections. The Differential Pressure (DP), Absolute Pressure (AP), and Gauge Pressure (GP) name plates are essentially the same. The DP model provides one additional entry (7 vs. 6) in the meter body Selections (Table I) to accommodate the static pressure rating.

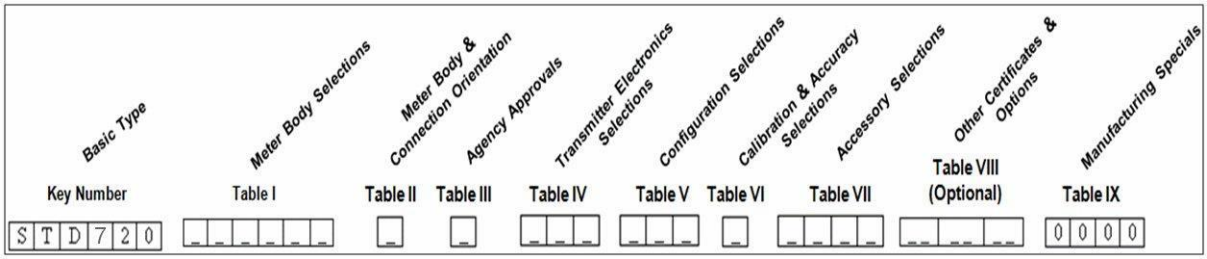

Figure 3 – ST 700 Standard Transmitter - Typical Name Plate

You can readily identify the series and basic transmitter type from the third and fourth digits in the key number. The letter in the third digit represents one of these basic transmitter types:

- A = Absolute Pressure
- D = Differential Pressure
- F = Flange Mounted
- G = Gauge Pressure
- R = Remote Seals

For a complete selection breakdown, refer to the appropriate Specification and Model Selection Guide provided as a separate document.

2.3 Safety Certification Information

An "approvals" name plate is located on the bottom of the electronics housing assembly. See Figure 1 for the exact location. The approvals name plate contains information and service marks that disclose the transmitter compliance information.
Refer to Section Appendix A in this document for safety certification requirements and details.

2.4 Transmitter Adjustments

Zero and Span adjustments are possible in ST 700 standard transmitter with the optional three and two-button assemblies.

You can also use the Honeywell Versatilis Configurator or other third-party hand-held configurator to make adjustments to the ST 700 standard transmitter. Alternately, certain adjustments can be made through the Experion or Universal Station if the transmitter is digitally integrated with a Honeywell Experion or TPS system.

2.5 Display Options – Standard Display

Table 3– Available Display Characteristics

Basic display	• 360° rotation in 90° Increments. • 2 lines, 16 characters. • Standard and custom engineering units. • Diagnostic messaging. • English only. • Square root output indication.
Standard display	• 360º rotation in 90º Increments. • 2 lines, 8 characters. • Standard and custom engineering units. • Diagnostic messaging. • English and Russian language support. • Square root output indication.

Advanced Display	• 360° rotation in 90° increments.
	• Three (3) configurable screen formats:
	  ○ Large process variable (PV).
	  ○ PV with bar graph.
	  ○ PV with trend (1-24 hours, configurable).
	• Eight (8) screens with 3-30 seconds rotation timing.
	• Standard and custom engineering units.
	• Diagnostic alerts and diagnostic messaging.
	• Multiple language support:
	  ○ EN, FR, GE, SP, RU, IT & TK.
	  ○ EN, CH (Kanji), JP.
	• Square root output indication.
	• Supports 3-button configuration and calibration.
	• Supports transmitter messaging and maintenance mode indications.

2.6 Optional Integrated Two-Button Assembly (Standard Display)

The standard display does not support all the transmitter configuration parameters and has limited features.

The optional integrated two-button assembly for the standard display provides the following features and capabilities:

- Menu and enter key functionality.
- With the menu-driven display:
  - Comprehensive on-screen menu for navigation.
  - Transmitter configuration: enter LRV, enter URV and loop test.
  - Transmitter calibration.
  - Display configuration (contrast only).
  - Set zero and span parameters.

	If you are using the optional *external* two-button assembly with the standard display, then you can perform all the above operations without removing the external glass cap.

	Lower range value (LRV): A display parameter (standard display), which allows users to enter the measuring value for which the analog output will be scaled to 4mA. **Upper range value (URV):** A display parameter (standard display), which allows users to enter the measuring value for which the analog output will be scaled to 20mA.

3 Application Design for the ST 700 Standard Transmitter

3.1 Overview

This section discusses the considerations involved with deploying a Honeywell ST 700 standard transmitter in a process system. The following areas are covered:

- Safety.
- Input and output data.
- Reliability.
- Environmental limits.
- Installation considerations.
- Operation and maintenance.
- Repair and replacement.

3.2 Accuracy

The ST 700 standard transmitter measures the gauge, differential, or absolute pressure of a process and reports the measurement to a receiving device.

3.2.1 Diagnostic Messages

The transmitter standard diagnostics are reported in the two basic categories listed in Table 4.

Problems detected as critical diagnostics drive the analog output to the programmed burnout level.

Problems detected as non-critical diagnostics may affect performance without driving the analog output to the programmed burnout level. Informational messages (not listed in Table 4) report various transmitter status or setting conditions. The messages listed in Table 4 are specific to the transmitter, exclusive of those associated with HART and DE protocols. HART and DE diagnostic messages are listed and described in the *ST 700 SmartLine Pressure Transmitter HART/DE Option User Manual*, Document # 34-ST-25-47.

	The standard display is only available on HART transmitters.

	The standard display only displays critical diagnostics (meter body fault, electronics module fault and meter body communication fault). Non-critical diagnostics are not displayed.

Table 4 – ST 700 Standard transmitter - Basic Display Diagnostics Messages

Critical Diagnostics (Failure Conditions)	Non-Critical Diagnostics (Warning Conditions)	
Sensor Comm Timeout	No DAC Compensation	No DAC Calibration
Meter Body Critical Failure	No Factory Calibration	Tamper Alarm
Electronic Module Diag Failure	PV Out of Range	Meter Body Unreliable Comm
Config Data Corrupt	Fixed Current Mode	Loop Current Noise
Meter Body NVM Corrupt	Sensor Over Temperature	AO Out of Range
Electronic Module DAC Failure	Meter Body Excess Correct	URV Set Error – Span Config
	Local Display	Button
	Low Supply Voltage	LRV Set Error – Span Config
		Button

3.3 Safety

3.3.1 Safety Integrity Level (SIL)

The ST 700 standard transmitter has met manufacturer design process requirements of Safety Integrity Level (SIL) 3. These are intended to achieve sufficient integrity against systematic errors of design by the manufacturer.

A Safety Instrumented Function (SIF) designed with this product must not be used at a SIL level higher than the statement, without “prior use” justification by the end user or diverse technology redundancy in the design.

Refer to the *Honeywell SmartLine Safety Manual*, 34-ST-25-37 for additional information.

4 Installation and Startup for the ST 700 Standard Transmitter

4.1 Installation Site Evaluation

Evaluate the site selected for the ST 700 standard transmitter installation with respect to the process system design specifications and Honeywell's published performance characteristics for your particular model. Some parameters that you may want to include in your site evaluation are:

- Environmental Conditions:
  - Ambient Temperature.
  - Relative Humidity.
- Potential Noise Sources:
  - Radio Frequency Interference (RFI).
  - Electromagnetic Interference (EMI).
- Vibration Sources
  - Pumps.
  - Motorized System Devices (e.g., pumps).
  - Valve Cavitation.
- Process Parameters
  - Temperature.
  - Maximum Pressure Rating.

4.2 Honeywell Versatilis Configurator

The Honeywell Versatilis Configurator, hereinafter referred as HVC in this document, consists of the Advanced Communication Interface and Honeywell Versatilis Configurator app. It is a next-generation universal handheld solution for configuring, calibrating, monitoring and diagnosing field devices. It converts conventional field devices to smart field devices and lets them communicate with the Honeywell Versatilis Configurator through Bluetooth.

For more information, refer to the '*Setup*' section in the Honeywell Versatilis Configurator User Manual, 34-ST-25-70 (click the link and navigate to the 'Support' tab to access the manual) for device operation and maintenance.

4.3 Display Installation Precautions

Temperature extremes can affect display quality. The display can become unreadable at temperature extremes; however, this is only a temporary condition. The display will again be readable when temperatures return to within operable limits.

The display update rate may become slower at cold temperature extremes, but as with readability, normal updating resumes when temperatures are within limits for full operability.

	The ST 700 standard transmitter should not be operated without the endcap covers on. Covers can be removed temporarily for configuration with buttons or during maintenance/wiring. The static voltage must be discharged before removing the cover.

4.4 Mounting – ST 700 Standard Transmitter

4.4.1 Summary

The ST 700 standard transmitter models, except flush mounts and those with integral flanges, can be attached to a two-inch (50 millimeters) vertical or horizontal pipe using Honeywell's optional angle or flat mounting bracket; alternately you can use your own bracket. flush-mount models are attached directly to a process pipe or tank by a one-inch weld nipple. Models with integral flanges are supported by the flange connection.

Figure 4 shows a typical bracket-mounted and flange-mounted transmitter installations.

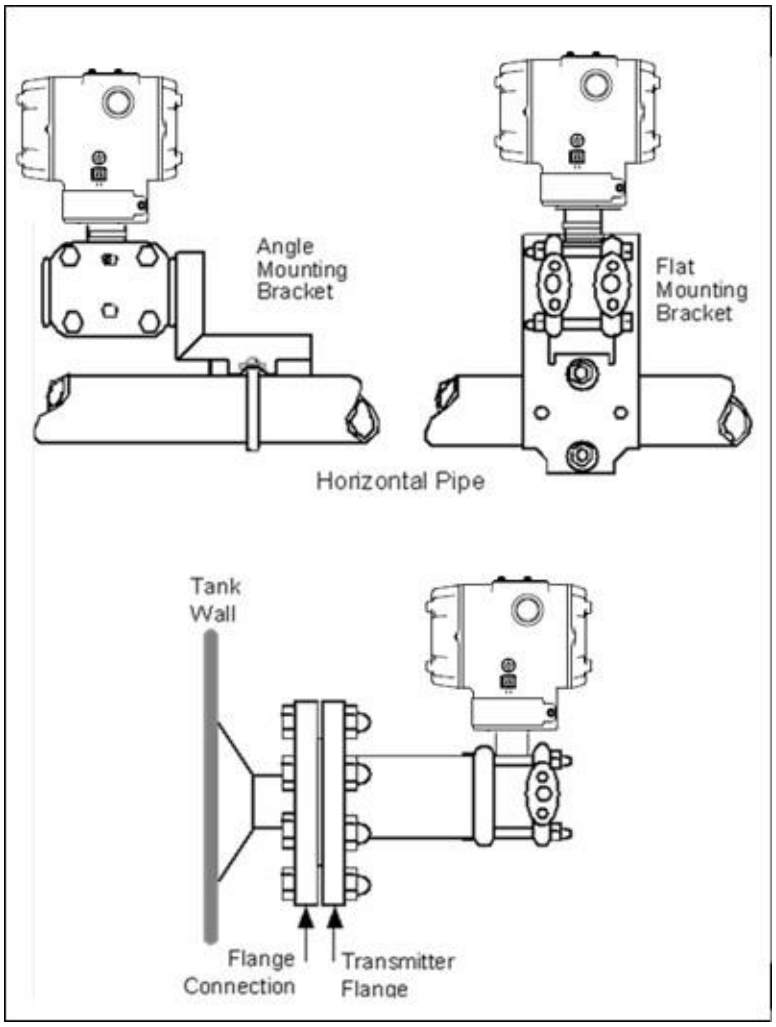

Figure 4 – ST 700 Standard Transmitter - Typical Bracket and Flange Mounted Installations

4.4.2 Flush mounting – ST 700 Standard Transmitter

To mount a flush mounted model, cut a hole for a 1" standard pipe in the tank or pipe where the transmitter is to be mounted. Weld the 1" mounting sleeve to the wall of the tank or to the hole cut on the pipe. Insert the meter body of the transmitter into the mounting sleeve and secure with the locking bolt. Tighten the bolt to a torque of 6,4 Nm +/- 0,30 Nm (4.7 ft-lbs +/- 0.2 ft.-lbs.). Figure 5 shows a typical installation for a transmitter with a flush mount on a pipe.

Once the transmitter is mounted, the electronics housing can be rotated to the desired position. See Figure 8 for details.

ATTENTION: On insulated tanks, remove enough insulation to accommodate the mounting sleeve.

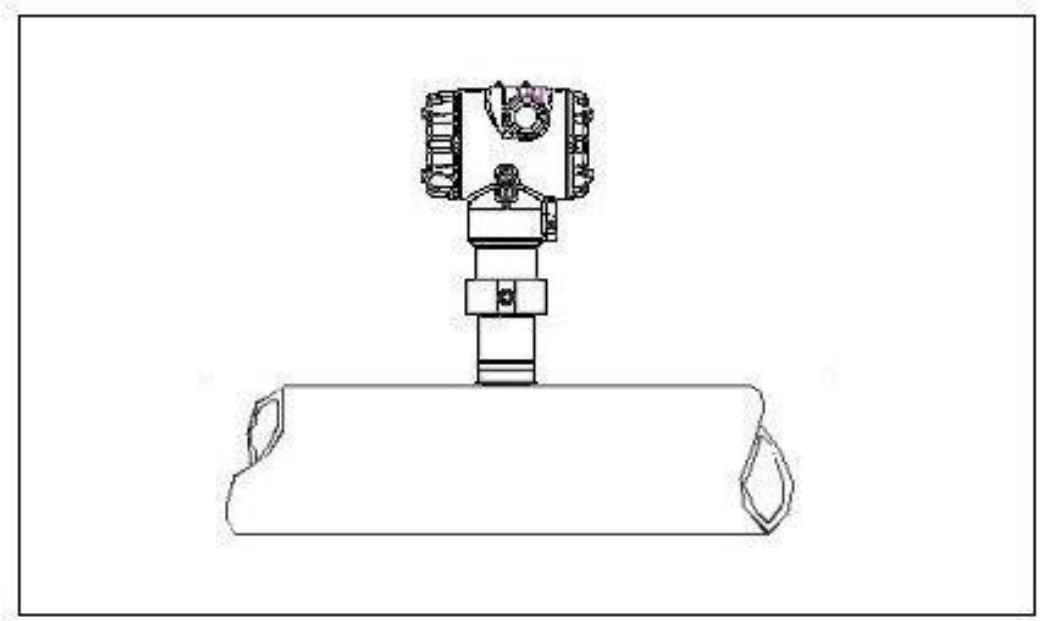

Figure 5 - ST 700 Standard Transmitter - Typical Flush Mounted Installation

4.4.3 Mounting Dimensions

Refer to Honeywell drawing number 50049930 (Dual Head), 50049931 (In-Line), 50049932 (flange mount) 50049933 (Extended flange), 50049934 (Remote Seal) and 50049936 (flush mount pressure transmitter) for detailed dimensions. Abbreviated overall dimensions are also shown on the Specification Sheets for the transmitter models. This section assumes that the mounting dimensions have already been taken into account and the mounting area can accommodate the transmitter.

4.4.4 Bracket Mounting Procedure

If you are using an optional bracket, start with Step 1. For an existing bracket, start with Step 2.

1. Refer to Figure 6. Position the bracket on a 2-inch (50.8mm nominal diameter, 2.38" (60.4mm) actual OD) for a horizontal or vertical pipe, and install a "U" bolt around the pipe and through the holes in the bracket. Secure the bracket with the nuts and lock washers provided.

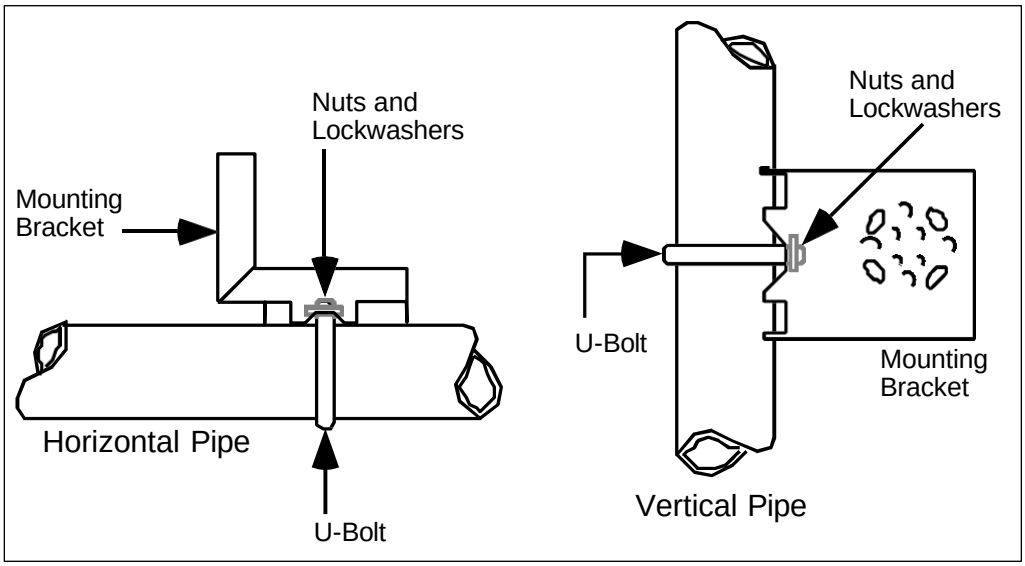

Figure 6 – ST 700 Standard Transmitter - Angle Mounting Bracket Secured to a Horizontal or Vertical Pipe

2. Align the appropriate mounting holes in the transmitter with the holes in the bracket. Use the bolts and washers provided to secure the transmitter to the bracket; see the following variations.

Table 5 - ST 700 Standard Transmitter - Mounting Bracket procedure

Transmitter Type	Use Hardware
DP with double-ended process heads and/or remote seals	Alternate mounting holes in the ends of the heads
ST 700 standard transmitter models only. In-line GP: STG7x0 and STG7xL AP models: STA7xL and STA72x, STA740	The smaller "U" bolt provided to attach the meter body to the bracket. See the following example.
Dual-head GP and AP	Mounting holes in the end of the process head.

Example: Inline model mounted to an optional angle bracket. See Figure 7**.**

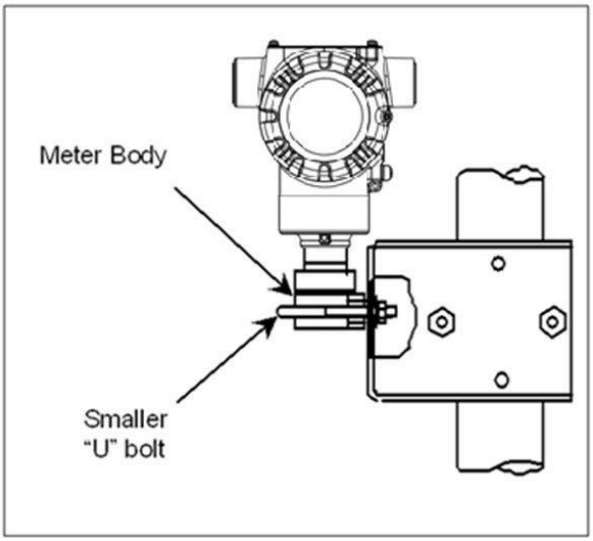

Figure 7 – ST 700 Standard Transmitter - Inline Model Mounted to an Optional Bracket

3. Loosen the set screw on the outside neck of the transmitter one (1) full turn.

4. Rotate the electronics housing a maximum of 180° left or right from the center to the position you require and tighten the set screw using a 4mm metric socket head wrench. See the following example and Figure 8.

   Example: Rotating the electronics housing

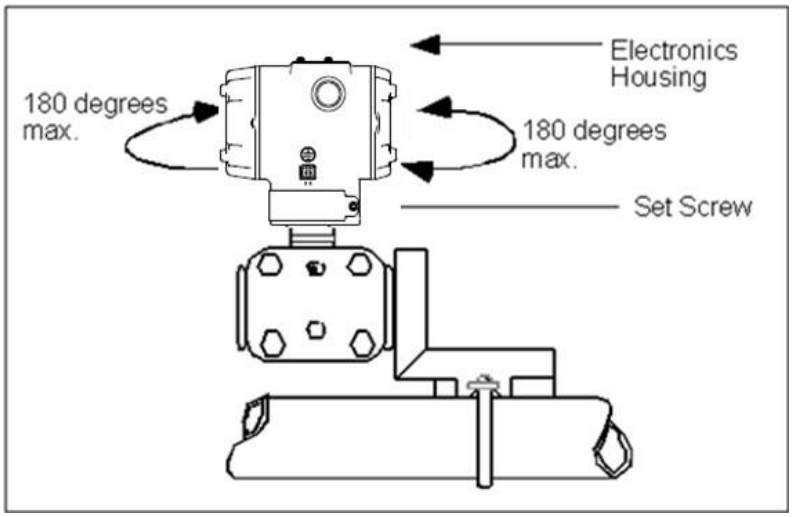

Figure 8 – ST 700 Standard Transmitter - Rotating the Electronics Housing

The mounting position of AP models STA722 and STA72L becomes critical as the transmitter spans become smaller. A maximum zero shift of 2.5mmHg for these models can result from a mounting position that is rotated 90o from the vertical.
A typical zero-shift of 0.12mmHg or 0.20 inH_2O can occur for a five (5)-degree rotation from the vertical

4.4.5 Mounting Transmitters with Small Absolute or Differential Pressure Spans

To minimize positional effects on calibration (zero shift), take the appropriate mounting precautions for the respective transmitter model. Ensure that the transmitter is vertical when mounting models STA722 and STA72L. You do this by leveling the transmitter side-to-side and front-to-back. **Figure 9** shows how to level a transmitter using a spirit level.

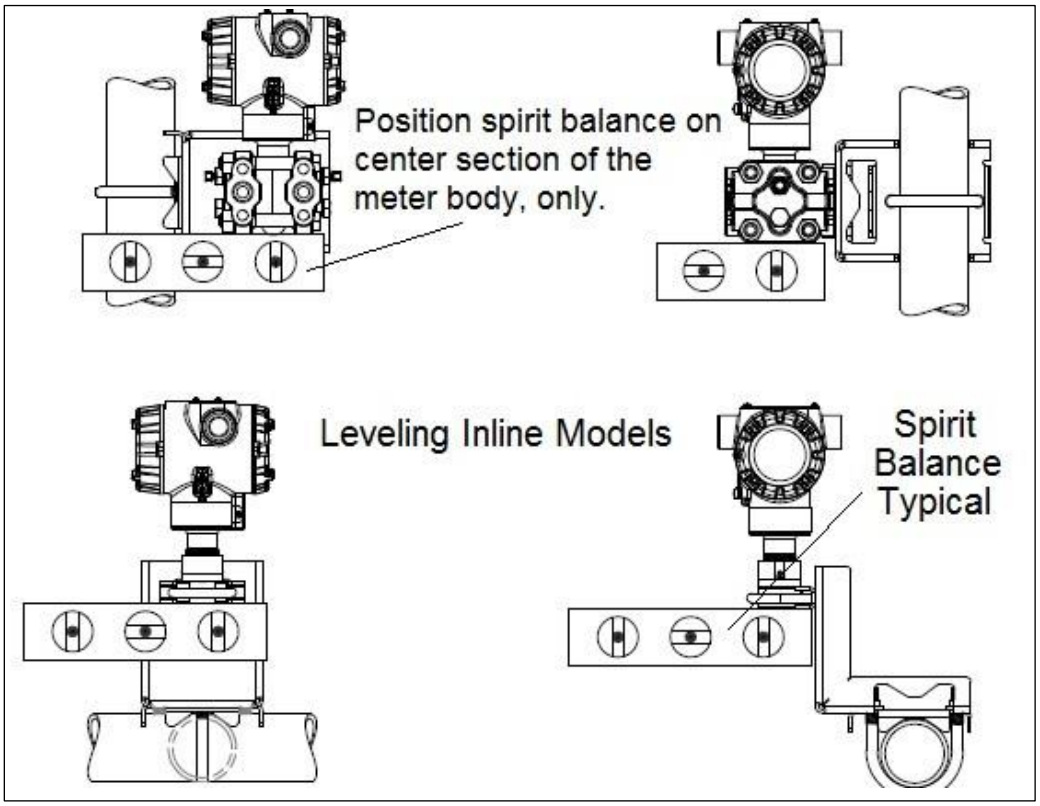

Figure 9 – ST 700 Standard Transmitter - Using a Spirit Balance to Level a Transmitter

4.4.6 Flange Mounting

Figure 10 shows a typical tank-flange mount installation, with the transmitter flange mounted to the pipe on the wall of the tank.

On insulated tanks, remove enough insulaiton to accommodate the flange extension.

When flange-mounting to a tank, note the following:

- The End User is responsible for providing a flange gasket and mounting hardware suitable for the transmitter service conditions.
- To avoid degrading performance in flush-mounted flanged transmitters, exercise care to ensure that the internal diameter of the flange gasket does not obstruct the sensing diaphragm.
- To prevent performance degradation in extended-mount flanged transmitters, ensure that sufficient clearance exists in front of the sensing diaphragm body.

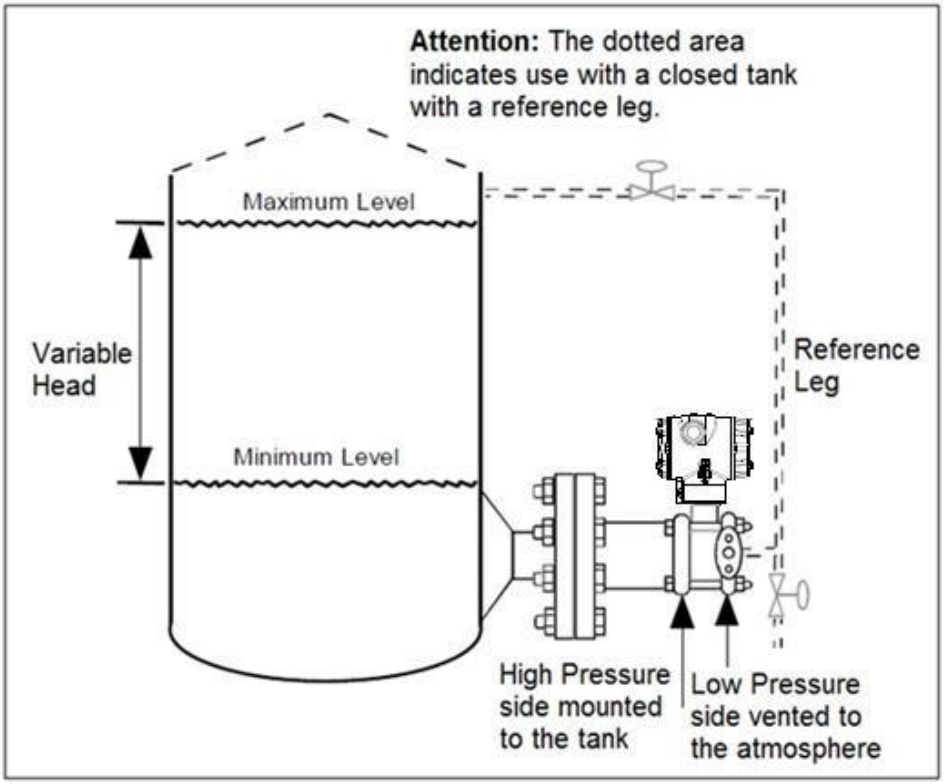

Figure 10 – ST 700 Standard Transmitter - Tank-Flange Mounted Transmitter

4.4.7 Remote Diaphragm Seal Mounting Information

The combination of tank vacuum and high pressure capillary head effect should not exceed nine (9) psi (300mmHg) absolute. For insulated tanks, be sure to remove enough insulation to accommodate the flange extension. The end user is responsible for supplying a flange gasket and mounting hardware suitable for the service condition of the transmitter.

Mount the transmitter flanges within the limits in **Table 6** for the fill fluid in the capillary tubes, with a tank at one (1) atmosphere.

Table 6 – ST 700 Standard Transmitter - Flange Mounting Guidelines

Fill Fluid	Mount the Flange…
Silicone 200 Oil	≤22 feet (6.7 meters) below the transmitter
Chlorotrifluorethylene (CTFE)	≤11 feet (3.4 meters) below the transmitter

Refer to Figure 11 for a representative remote diaphragm seal installation. Mount the transmitter at a remote distance determined by the length of the capillary tubing.

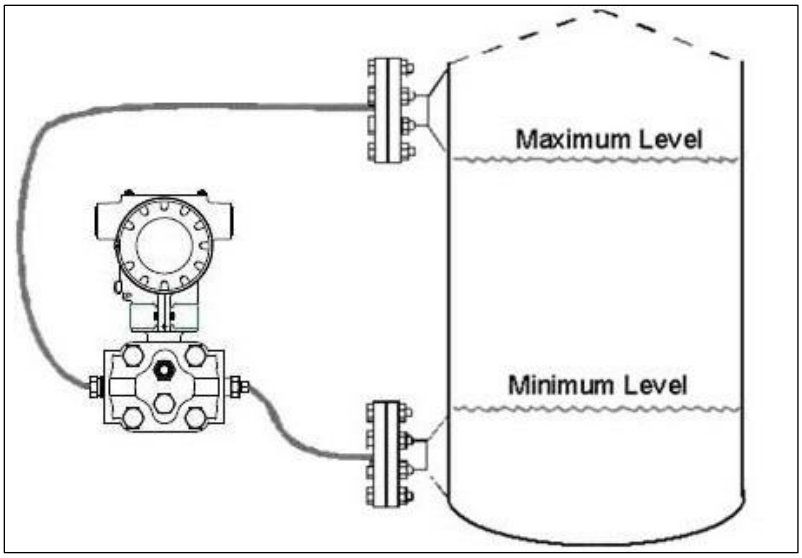

Figure 11 – ST 700 Standard Transmitter - Representative Remote Diaphragm Seal Transmitter Installation

Depending on transmitter model, connect the remote seal to the tank according to Table 7.

Table 7 – ST 700 Standard Transmitter - Remote Diaphragm Mounting Details

Transmitter Model	Connect the Remote Seal on ….	
	Variable Head	Fixed or Constant Head
STR73D	Transmitter High Pressure (HP) Side to tank wall lower flange mounting.	Transmitter Low Pressure (LP) side to tank wall upper flange.

4.5 Piping the ST 700 Standard Transmitter

4.5.1 Piping Arrangements

Piping arrangements vary depending upon process measurement requirements and the transmitter model. For example, a differential pressure transmitter comes with double-ended process heads with ¼-inch NPT connections, which can be modified to accept ½-inch NPT through optional flange adapters. Gauge pressure transmitters are available with various connections for direct mounting to a process pipe.

A ½-inch, schedule 80, steel pipe is commonly used for transmitter integration into a process system. Many piping arrangements use a three-valve manifold to connect the process piping to the transmitter. A manifold makes it easy to install and remove or re-zero a transmitter without interrupting the process. A manifold also accommodates the installation of blow-down valves to clear debris from pressure lines. Figure 12 represents a typical piping arrangement using a three-valve manifold and blow-down lines for a differential pressure transmitter being used to measure flow.

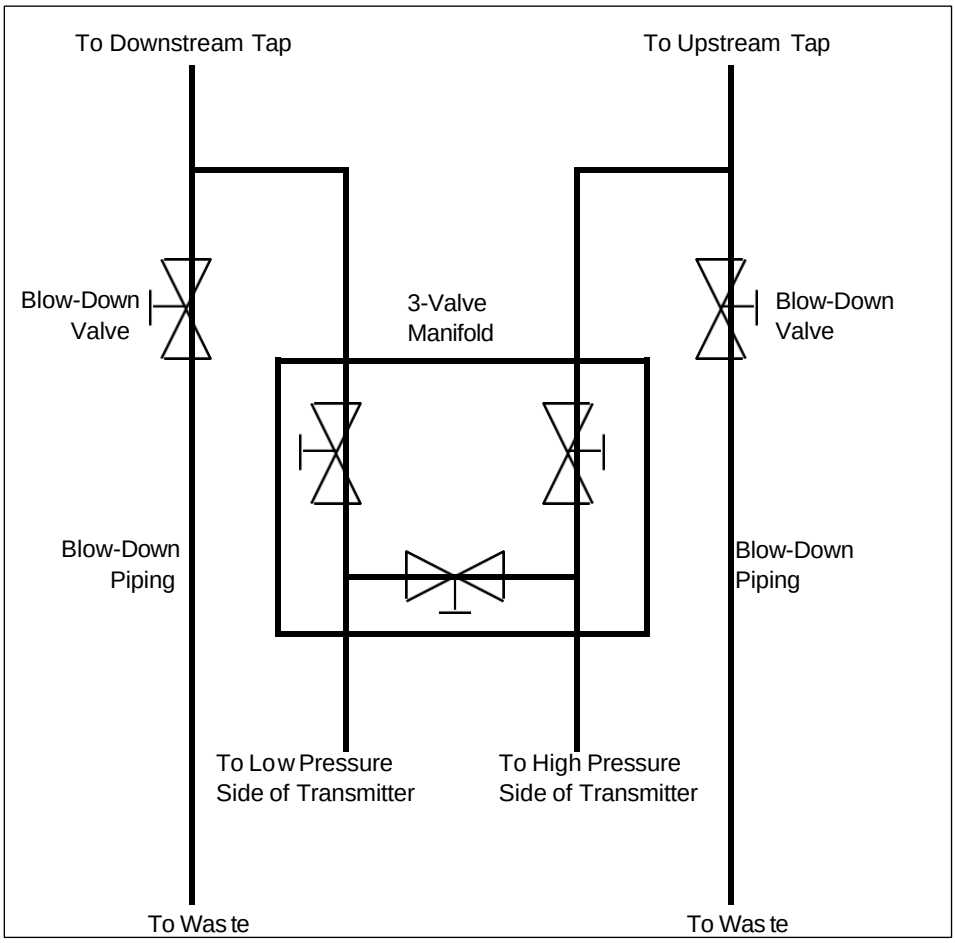

Figure 12 – ST 700 Standard Transmitter - Typical 3-Valve Manifold with Blow-Down Piping

4.5.2 Transmitter Location

The following are suggested connections based on what is being processed by the system.

Table 8 – ST 700 Standard Transmitter - Suggested Connection Locations

Process	Suggested Location	Description
Gases	Above the gas line.	The condensate drains away from the transmitter.
Liquids	Below but near the elevation of the process connection.	This minimizes that static head effect of the condensate.
	Level with or above the process connection.	This requires a siphon to protect the transmitter from process steam. The siphon retains water as a *fill fluid*.

1. For liquid or steam, the piping should slope a minimum of 25.4mm (1 inch) per 305mm (1 foot).
2. Slope the piping down toward the transmitter if it is below the process connection to allow the bubbles to rise back into the piping through the liquid.
3. If the transmitter is located above the process connection, the piping should rise vertically above the transmitter. In this case, slope down toward the flow line with a vent valve at the high point.
4. For gas measurement, use a condensate leg and drain at the low point (freeze protection may be required here).

ATTENTION Care must be taken when installing transmitters on hot processes. The operating temperature limits for the device (as outlined in Table 5) must not be exceeded. Impulse piping may be used to reduce the temperature of the process that comes into contact with the transmitter meter body. As a general rule there is a 56°C drop (100°F) in the temperature of the process for every foot of ½ inch uninsulated piping.

4.5.3 General Piping Guidelines

- When measuring fluids that contain suspended solids, install permanent valves at regular intervals to blow-down piping.
- Blow-down all lines on new installations with compressed air or steam, and flush them with process fluids (where possible) before connecting these lines to the transmitter Meter body.
- Verify that the valves in the blow-down lines are closed tightly after the initial blow-down procedure and each maintenance procedure thereafter.

4.5.4 Procedure to Install Flange Adapters

The following procedure provides the steps for removing and replacing an optional flange adapter on the process head. Refer to Figure 13.

This procedure does not require that the meter body be removed from the electronics housing. If flange adapters are being replaced with parts from other kits (for example, process heads), follow the procedures for the kits and incorporate the following procedure.

The threaded hole in each flange adapter is offset from center. To ensure proper orientation for re-assembly, note the orientation of the offset relative to each process head **before removing the adapter**.

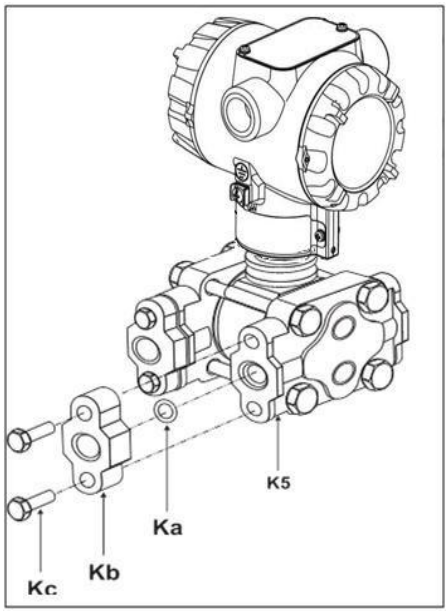

Figure 13 – ST 700 Standard Transmitter - Flange Adapter Removal and Replacement

Refer to the instructions included with the kit for removal and replacement procedures.

4.6 Wiring the ST 700 Standard Transmitter

4.6.1 Overview

The transmitter is designed to operate in a two-wire power/current loop with loop resistance and power supply voltage within the operating range shown in Figure 14.

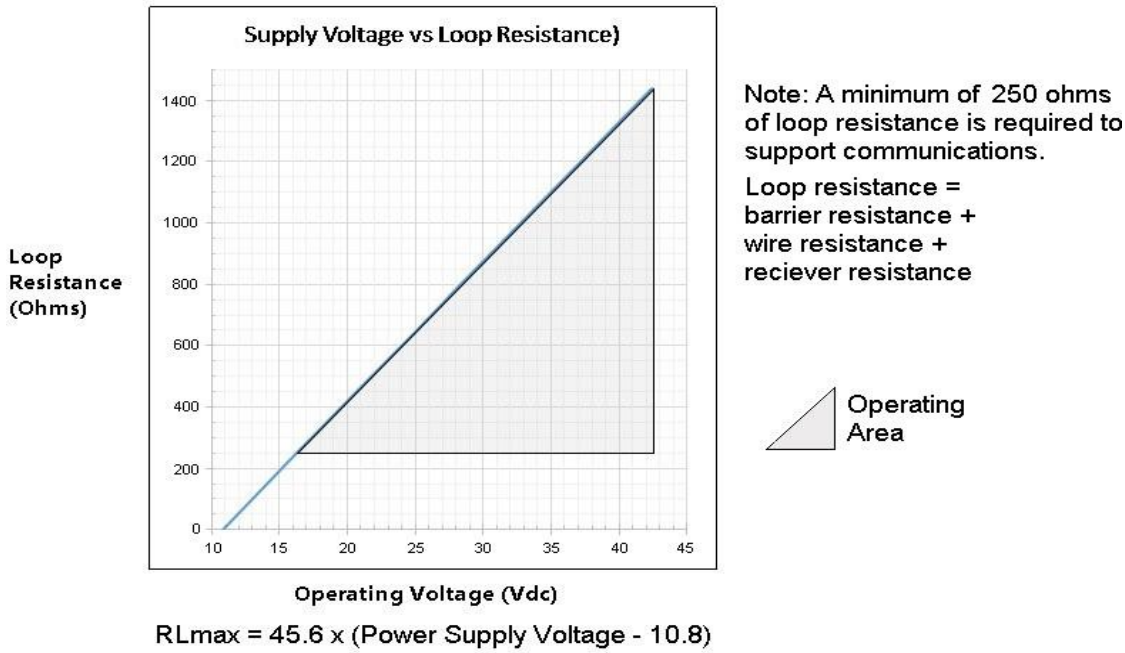

Figure 14 – ST 700 Standard Transmitter – Operating Ranges

Loop wiring is connected to the transmitter by simply attaching the positive (+) and negative (–) loop wires to the positive (+) and negative (–) terminals on the transmitter terminal block in the electronics housing shown in Figure 15.

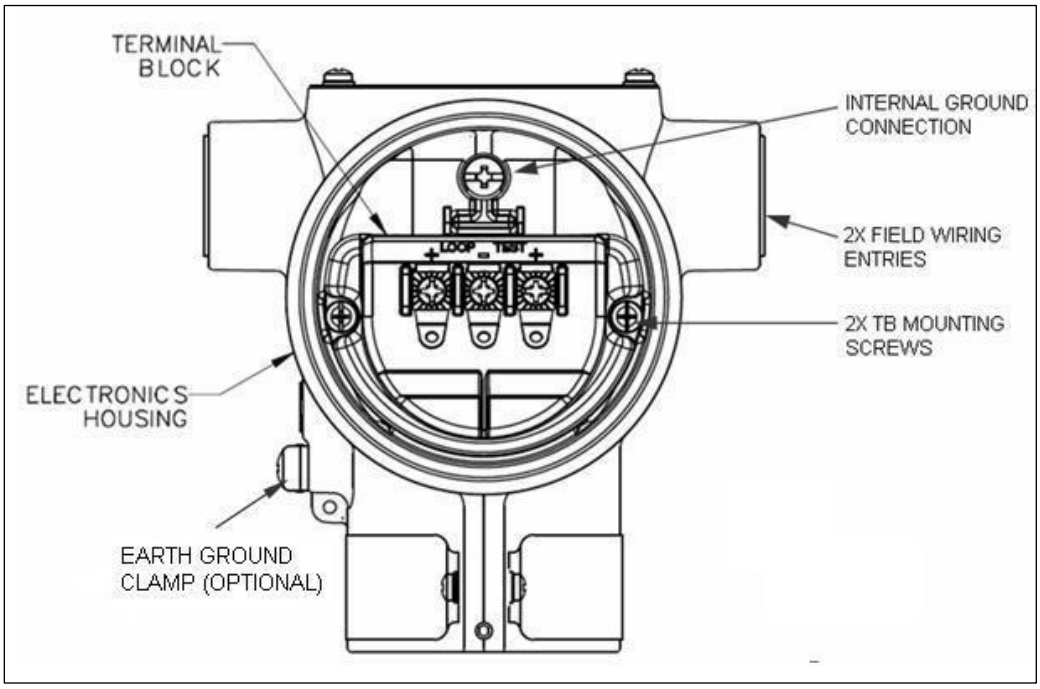

Figure 15 – ST 700 Standard Transmitter - 3-Screw Terminal Board and Grounding Screw

As shown in Figure 15, each transmitter has an internal terminal to connect it to earth ground. Optionally, a ground terminal can be added to the outside of the electronics housing. While it is not necessary to ground the transmitter for proper operation, doing so tends to minimize the possible effects of noise on the output signal and affords protection against lightning and static discharge. An optional lightning terminal block can be installed in place of the non-lightning terminal block for transmitters that will be installed in an area that is highly susceptible to lightning strikes.

Wiring must comply with local codes, regulations and ordinances. Grounding may be required to meet various approval body certification, for example CE conformity. Refer to Appendix A of this document for details.

Note: The right-hand terminal is for loop test and is not applicable for the Fieldbus option.

The transmitter is designed to operate in a two-wire power/current loop with loop resistance and power supply voltage within the operating range; see Figure 14.
With optional lightning protection and/or a remote meter, the voltage drop for these options must be added to the basic 10.8-volt supply requirements to determine the required transmitter voltage (V_{XMTR}) and maximum loop resistance ($R_{LOOP\ MAX}$). Additional consideration is required when selecting intrinsic safety barriers to ensure that they will supply at least minimum transmitter voltage ($V_{XMTR\ MIN}$), including the required 250 ohms of resistance (typically within the barriers) needed for digital communications.

Transmitter loop parameters are as follows:

$R_{LOOP\ MAX}$ = maximum loop resistance (barriers plus wiring) that will allow proper Transmitter operation and is calculated as $R_{LOOP\ MAX} = (V_{SUPPLY\ MIN} - V_{XMTR\ MIN}) \div 21.8mA$.

In this calculation:

$V_{XMTR\ MIN} = 10.8V + V_{LP} + V_{SM}$

$V_{LP} = 1.1V$, lightning protection option, LP

$V_{SM} = 2.3V$, remote meter

Note that V_{SM} should only be considered if a remote meter will be connected to the transmitter.

The positive and negative loop wires are connected to the positive (+) and negative (–) terminals on the terminal block in the transmitter electronics housing.

Barriers can be installed per Honeywell's instructions for transmitters to be used in intrinsically safe applications.

4.6.2 Digital System Integration Information

Transmitters that are to be digitally integrated to Honeywell's Total Plant Solution (TPS) system will be connected to the pressure transmitter interface module in the Process Manager, Advanced Process Manager or High-Performance Process Manager through a Field Termination Assembly. Details about the TPS system connections are given in the *PM/APM SmartLine Transmitter Integration Manual*, PM12-410, which is part of the TDC 3000^X system bookset.

If you are digitally integrating a transmitter in an Allen Bradley Programmable Logic Controller (PLC) process system, the same Field Terminal Assembly (FTA) and wiring procedures used with Honeywell's TPS system are also used with the Allen-Bradley 1771 and 1746 platforms.

4.6.3 Wiring Variations

The above procedures are used to connect power to a transmitter. For loop wiring and external wiring, detailed drawings are provided for transmitter installation in non-intrinsically safe areas and for intrinsically safe loops in hazardous area locations.

If you are using the transmitter with Honeywell's TPS system, see *PM/APM SmartLine Transmitter Integration Manual*, PM12-410, which is part of the TDC 3000^X system book set.

4.6.4 Wiring Procedure

1. See Figure 15, above, for parts locations. Loosen the end cap lock using a 1.5mm Allen wrench.
2. Remove the end cap cover from the terminal block end of the electronics housing.
3. Feed loop power leads through one end of the conduit entrances on either side of the electronics housing. The transmitter accepts up to 16AWG wire.
4. Plug the unused conduit entrance with the appropriate plug for the environment.
5. Connect the positive loop power lead to the positive (+) terminal and the negative loop power lead to the negative (-) terminal. Note that the transmitter is <u>not</u> polarity sensitive.
6. Replace the end cap and secure it in place.

4.6.5 Lightning Protection

If your transmitter includes the optional lightning protection, connect a wire from the Earth Ground Clamp (see Figure 15) to Earth Ground to make the protection effective. Use a size 8 AWG or ($8.37mm^2$) bare or green covered wire for this connection.

4.6.6 Supply Voltage Limiting Requirements

If your transmitter complies with the ATEX 4 directive for self-declared approval per 94/9EC, the power supply has to include a voltage-limiting device. Voltage must be limited such that it does not exceed 42V DC. Consult the process design system documentation for specifics.

4.6.7 Process Sealing

The ST 700 SmartLine pressure transmitter is CSA-certified as a Dual Seal device in accordance with ANSI/ISA–12.27.01–2003, "Requirements for Process Sealing Between Electrical Systems and Flammable, or Combustible Process Fluids."

4.6.8 Explosion-Proof Conduit Seal

When installed as explosion proof in a Division 1 Hazardous Location, keep covers tight while the transmitter is energized. Disconnect power to the transmitter in the non-hazardous area prior to removing end caps for service.

When installed as non-incendive equipment in a Division 2 hazardous location, disconnect power to the transmitter in the non-hazardous area, or determine that the location is non-hazardous before disconnecting or connecting the transmitter wires.

Transmitters installed as explosion proof in Class I, Division 1, Group A Hazardous (classified) location in accordance with ANSI/NFPA 70, the US National Electrical Code, with 1/2 inch conduit do not require an explosion-proof seal for installation. If 3/4-inch conduit is used, a LISTED explosion-proof seal to be installed in the conduit, within 18 inches (457.2mm) of the transmitter.

4.7 Startup – ST 700 Standard Transmitter

4.7.1 Overview

This section identifies typical start up tasks associated with several generic pressure measurement applications. It also includes the procedure for running an optional analog output check.

4.7.2 Startup Tasks

After completing the installation and configuration tasks for a transmitter, you are ready to start up the process loop. Startup usually includes:

- Checking zero input.
- Reading inputs and outputs.
- Applying process pressure to the transmitter.

You can also run an optional output check to *wring out* an analog loop and check out individual Process Variable (PV) outputs in Digitally Enhanced (DE) mode before startup.

The actual steps in a startup procedure vary based on the type of transmitter and the measurement application. In general, the procedures in this section are based on using the Honeywell Versatilis Configurator to check the transmitter input and output under static process conditions and make adjustments as required initiating full operation with the running process. Note that similar checks can be made using the optional three-button assembly, where the transmitter is equipped. Operation with the three-button assembly is discussed in the Operation section.

When the standard display is connected, the two-button assembly for the standard display is present. The buttons will function 1 second after powering up.

4.7.3 Output Check Procedures

The Output Check comprises the following procedures:

- The loop test procedure checks for continuity and the condition of components in the output current loop.
- The Trim DAC Current procedure calibrates the output of the Digital-to-Analog converter for minimum (0%) and maximum (100%) values of 4mA and 20mA, respectively. This procedure is used for transmitters operating online in analog mode to ensure proper operation with associated circuit components (for example, wiring, power supply, control equipment). Precision test equipment (an ammeter or a voltmeter in parallel with precision resistor) is required for the Trim DAC Current procedure.
- The Apply Values procedure uses actual Process Variable (PV) input levels for calibrating the range of a transmitter. To measure a liquid level for example, a sight-glass can be used to determine the minimum (0%) and maximum (100%) level in a vessel. The PV is carefully adjusted to stable minimum and maximum levels, and the LRV and URV are then set by commands from the Honeywell Versatilis Configurator.

The transmitter does not measure the given PV input or update the PV output while it operates in the Output mode.

4.7.4 Constant Current Source Mode Procedure

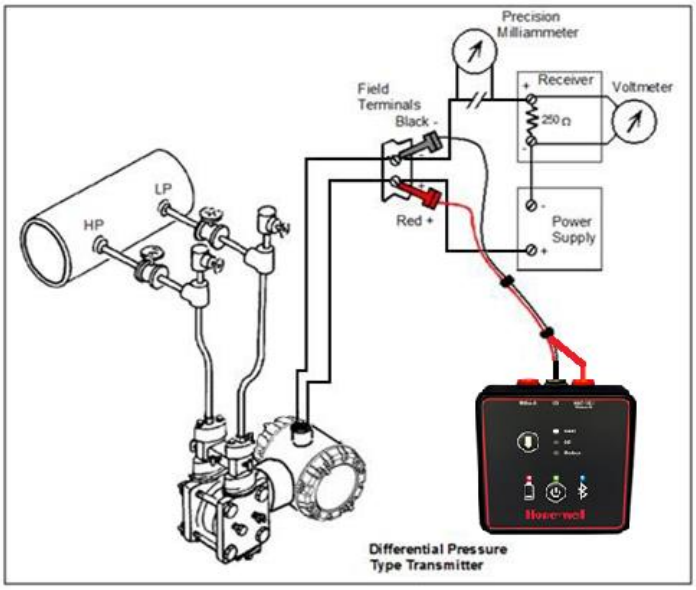

Figure 16 – ST 700 Standard Transmitter - Current Loop Test Connections

1. Refer to Figure 16 for test connections but using the HVC. Verify the integrity of electrical components in the output current loop.
2. Establish communication with the transmitter. For these procedures, the values of components in the current loop are not critical if they support reliable communication between the transmitter and the Configurator.
3. On the Configurator, go to Output Calibration.
4. In Output Calibration, select Loop Test.
5. Select the desired fixed output level: 0%, 100%, or Other (any between 0% - 100%) and proceed.
6. A warning will display to confirm placing the transmitter in fixed output mode.

With the transmitter in Analog mode, you can observe the output on an externally-connected meter or on a local meter. In DE mode, you can observe the output on the local meter or on the Configurator display.

7. Observe the output current at the percentage you selected in Step 5.
8. Exit Loop Test to view the monitored PV.
9. This concludes the Startup procedure.

5 Operation – ST 700 Standard Transmitter

5.1 Overview

This section provides the information and processes involved for both Digitally Enhanced (DE) and HART operation using the three-button basic and two-button standard options for the ST 700 standard transmitter.

5.2 Three-Button Operation

The ST 700 standard transmitter has an optional three-button interface that provides a user interface and operational capability without opening the transmitter. Figure 17 shows the location of the three-button option and the labels for each button.

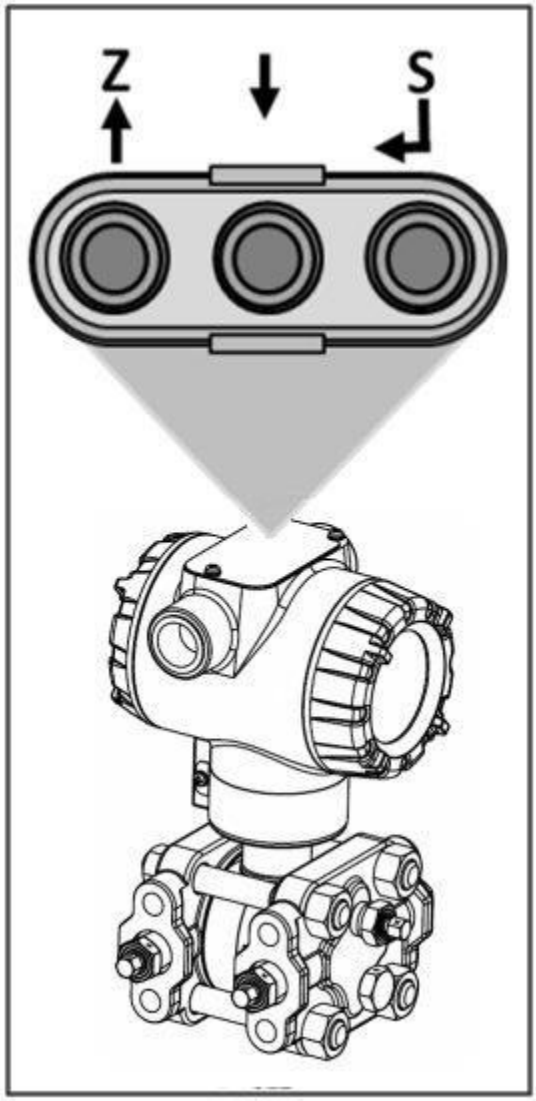

Figure 17 – ST 700 Standard Transmitter - Three-Button Option

Table 9 – Three-Button Option Functions

Physical Button	Advanced Display	Standard Display	Basic Display	Action
Left ↑	Increment Move cursor Up	Increment Move cursor Up	Increment Previous Menu Item	Scroll to previous menu item in an active list. Scroll through alphanumeric list to desired character (ex. for entering Tag names or numeric values)
Center ↓	Decrement Move cursor Down	Decrement Move cursor Down	Decrement Next Menu Item	Scroll to next menu item in an active list. Scroll through alphanumeric list to desired character (ex. for entering Tag names or numeric values)
Right ↵	Enter	Enter	Select displayed menu item for activation or editing	Call up the main menu. Call up a lower-level menu. Select an item for data entry. Confirm a data entry operation Activate the service associated with a selected menu item.

5.2.1 Menu Navigation

The behavior of the buttons is the same for advanced, standard and basic displays. The user must press ↵ button to call up the main menu. To exit the main menu and return to the PV display screen, select **<EXIT>**.

When on a lower-level menu, return to the menu above by selecting <Return>. Alternately, the (up) and (down) buttons can be pressed simultaneously to return to the menu above. When on the highest-level menu, or when using the basic display menu, pressing the (up) and (down) buttons simultaneously will exit the menu and return to the PV display.

Use the ↑ and ↓ buttons to scroll through the list of menu items. Press the ↵ button to select an item for data entry or activation. When an item is selected for data entry or activation, the cursor will jump to the lower line of the LCD (basic display) or call up a pop-up window (standard / advanced display) to allow editing of the value. No action is taken against a menu item until the ↵ button is pressed.

If a user presses the ↵ button to begin a data entry operation, they must press another button within 10 seconds, or the transmitter firmware will assume that the user wants to abort the operation or has walked away from the transmitter. After 10 seconds with no action, the data entry will time out and the original value of the parameter will be preserved.

If no button presses occur within 60 seconds, menu access will time out and the transmitter will exit the menu and return to the PV display.

5.2.2 Data Entry

Data entry is performed from left to right. Select a character / digit by pressing ↑ or ↓ buttons, and then press ↵ to advance to the next character position to the right. Select the crosshatch character ▒ to terminate the entry or if the final character is already a space character, just press ↵ again.

All numeric entries are clamped at the low or high limit if needed. You can determine the low and high limit for a parameter by selecting either the ▲/H or ▼/L character while the cursor is positioned over the left-most digit and press ↵ button. The display will show the selected limit.

Table 10 – Three-Button Data Entry

Screen Symbol	Numeric data entry	Text entry
▲ or H	Display the high limit for this parameter. This symbol only appears in the left-most position of the data entry field.	Not Available
▼ or L	Display the low limit for this parameter. This symbol only appears in the left-most position of the data entry field.	Not Available
▒	Terminate the numeric entry	Terminate the text entry
0 thru 9, Minus, Decimal	These characters are used to enter numeric values. The minus sign only appears in the left-most digit.	These characters can be used to create custom tags and unit labels
A thru Z, 0 thru 9 special symbols	Not Available	These characters can be used to create custom tags and unit labels

5.2.3 Editing a Numeric Value

Editing a Numeric Value
Editing of a numeric value is a digit-by-digit process, starting with the left-most digit.

1. Press ↵ to begin the edit process.
2. The basic display will show the current value of the item on the lower line, left justified. The advanced display will show the current value of the item in a pop-up window in the middle of the screen
3. Press the ↑ or ↓ buttons to select the desired digit, and then press ↵ to advance to the next digit to the right.
4. After the last digit has been entered, press ↵ one more time to write the new value to the transmitter.

5.2.4 Selecting a new setting from a list of choices

Use the procedure described below to select a new setting for parameters that present a list of choices (e.g., Screen Format, Display Units, etc.).

1. Press ↵ to begin the edit process.
    a. The basic display will show the current setting of the item on the lower line, left justified.
    b. The standard and advanced displays will show the current setting of the item in a pop-up window.
2. Press the ↑ or ↓ buttons to scroll through the list of choices.

3. Press ↵ to make your selection. The new selection will be stored in the transmitter and will be displayed on the lower line, right justified.

5.2.5 The Advanced Display Menus

The advanced display menus are organized into three levels, as shown by Table 11. There is a **<Return>** menu item at each level that allows the user to return to the previous level.

Table 11 – Advanced Display Main Menu Structure

Level 1	Level 2	Level 3
<Exit>	n/a	n/a
Diagnostics	Critical Non-Critical PILD (Optional)*	For details go to the Diagnostics Menu Table 12
Display Setup	LCD Contrast Common Setup Screen 1 Screen 2 … Screen 8	For details go to the Display Setup Menu Table 13 Note that the Advanced Display supports the configuration of up to 8 different screens.
Calibration	Set Time Stamp Zero Correct LRV Correct URV Correct Cal Low Correct Cal High Correct Barometric Correct SP Zero Correct Reset SP Correct Reset Corrects DAC Trim Loop Test Factory Cal	For details go to the Calibration Menu Table 14
Transmtr Setup	Parameters Enter LRV Enter URV Set LRV Set URV Install date PILD (Optional)*	For details go to the transmitter Setup Menu Table 15
Information	Display Elec module Meter Body	For details go to the Information Menu Table 16

*This feature is available only if ST 800 Sensor supports PILD feature.

Table 12 – Diagnostics Menu

All Diagnostics menu items are Read Only.

<Return> Return to the Level 1 menu			
Critical	<Return>		
	Active Diags	# #	Description
	Meter Body	OK FAULT	FAULT: There is a problem with the meter body
	Elec. module	OK FAULT	FAULT: There is a problem with the electronics module (HART, DE, or FF)
	Meter Body Comm	OK FAULT	FAULT: There is a problem with the interface between the meter body and the electronics module.
Non-Critical	<Return>		
	Active Diags	# #	Shows the number of Non-Critical Diagnostics that are currently active
	Analog Out Mode	Normal FIXED OUTPUT	Normal indicates that the Loop Output reflects the current value of the PV. FIXED OUTPUT indicates that the Loop Output of the transmitter is manually set a fixed value, probably due to a DAC Trim or Loop Test operation that is currently in progress.
	Zero Correct	OK EXCESSIVE	EXCESSIVE: Input applied exceeds 5% of expected value (as defined by LRV).
	Span Correct	OK EXCESSIVE	EXCESSIVE: Input applied exceeds 5% of expected value (as defined by URV).
	Supply Voltage	OK LOW HIGH	LOW: Supply voltage is below the low specification limit. HIGH: Supply voltage is above the high specification limit.
	Primary PV	OK OVERLOAD	OVERLOAD: Input pressure is greater than 200% URL (DP) or 150% URL (GP, AP).
	Meter Body Temp	OK OVER TEMP	OVERTEMP: Meter body temperature is greater than 125 °C.
	Elec Module Temp	OK OVER TEMP	OVERTEMP: Electronics temperature is greater than 85 °C.
	Meter Body Comm	OK SUSPECT	SUSPECT: The interface between the meter body and the electronics module is experiencing intermittent communication failures.
	Factory Cal	OK NO FACTORY CAL	The transmitter has not been calibrated by the factory.
	DAC Temp Comp	OK NO COMPENSATION	The DAC has not been compensated for temperature effects. This is a factory operation.

Non-Critical (continued)	PILD Block OS (Optional)	OK BLOCKED	It is applicable for DP transmitter only. *OK*: Blockage is not detected. *BLOCKED*: Blockage is detected at one side of impulse line. See **Note** below this table.
	PILD Block BS (Optional)	OK BLOCKED	It is applicable for DP transmitter only. *OK*: Blockage is not detected. *BLOCKED*: Blockage is detected at Both sides of impulse line. See **Note** below this table.
	PILD Blockage (Optional)	OK BLOCKED	It is applicable for AP/GP transmitter only. *OK*: Blockage is not detected. *BLOCKED*: Blockage is detected at measurement side. See **Note** below this table.
PILD (Optional)	<Return>		
	Current Mode	Training Monitoring	Displays the current status of PILD algorithm i.e. either Training mode or Monitoring Mode. See **Note** below this table
	PILD Factor	PILD factor for blockage prediction 0.0 to 1.0	Displays the current PILD factor value. See the Note below in table.
	Training Result	SUCCESS FAILED	Displays the training mode result.

NOTE: This diagnostics message or PILD sub menu will be visible only if PILD feature is supported by the sensor and user enabled in the PILD option in the transmitter.

Table 13 – Display Setup Menus

<Return> Return to the Level 1 menu				
LCD Contrast	<Return>			
	Set Contrast	# #	Adjust the LCD contrast level. Range from 0 to 9. Default: 5	Press ↵ to enter menu selection ↑ and ↓ to select number. ↵ to enter and shift to next digit
Common Setup	<Return>			
	Set Password	####	Enter the display configuration password. Default: 0000. This value disables the password. All other values enable the password. When enabled, a prompt to enter the password is presented only on the first parameter successfully accessed to change after entering the menu.	
	Language	• English, French, German, Italian, Spanish, Russian & Turkish • English, Chinese, Japanese	Select the language for the Display. Default: English	Press ↵ to enter menu selection ↑ and ↓ to select from list. ↵ to enter
	Rotation Time	# #	Time duration, in seconds, that each configured screen is shown before moving to the next screen. Range: 3 to 30 seconds Default: 10 seconds	Press ↵ to enter menu selection ↑ and ↓ to select number. ↵ to enter and shift to next digit
	Units	atm bar ftH2O @ 68°F gf/cm2 inH2O @ 39°F inH2O @ 60°F inH2O @ 68°F inHg @ 0°C kgf/cm2 kPa mbar mmH2O @ 4°C mmH2O @ 68°F cmH2O @ 4°C mH2O @ 4°C mmHg @ 0°C MPa Pa psi Torr	This selection determines the units of the values shown on the following menu items: • Enter LRV • Enter URV • Set LRV • Set URV • Zero Correct (Calib. menu) • LRV Correct (Calib. menu) • URV Correct (Calib. menu) • Calibration Parameters (Calib. menu) • Cal Low Correct (Calib. menu) • Cal High Correct (Calib. menu) • Barometric Correct (Calib. menu) • LRL (Meter Body Info. menu) • URL (Meter Body Info. menu)	Press ↵ to enter menu selection ↑ and ↓ to select from list ↵ to enter

			For calibration, this parameter allows the user to match the value displayed on the menus to the units supported by the user's calibration equipment.	

Screens 1 thru 8	<Return>				
	Screen Format	None PV PV & Bar Graph PV & Trend	Select the Screen format from the list.		Press ↵ to enter menu selection ↑ and ↓ to select from list. ↵ to enter
	Trend Duration	##	Select the amount of historic data visible on the Trend screen. Range: 1 to 24 hours. Applies to the "PV & Trend" format only		Press ↵ to enter menu selection ↑ and ↓ to select number. ↵ to enter and shift to next digit
	PV Selection	DP, AP, or GP Pressure Meter Body Temp Loop Output Percent Output Static Press PILD Factor (Optional) See Note 3 below	Select the Process Variable (PV) that will be shown this screen.		Press ↵ to enter menu selection ↑ and ↓ to select from list. ↵ to enter
	PV Scaling	None	Display the PV in the default units associated with the PV Selection. Default units: • Pressure: inH2O @ 39ºF • Meter Body Temp: ºC • Loop Output: mA • Percent Output: % • Static Pressure: psi		Press ↵ to enter menu selection ↑ and ↓ to select from list. ↵ to enter Custom Units: ↑ and ↓ to select Alphanumeric ↵ to enter and shift to next char
		Convert Units (Default PV scaling selection)	Convert the displayed PV to any pressure unit listed under Display Units		
		Linear See Note 1 below	Display Units	Custom	Units up to 8 char
		Square Root (only available for DP transmitters) See Note 2 below.	Display Units	% Custom Units	up to 8 char
				gal/min gal/h impgal/h L/s L/min L/h bbl/h CFH SCFM	

				SCFH SCFD MSCFH m3/h lb/min lb/h kg/hr MT/h	

Screens 1 thru 8 (continued)	Display Units	atm bar ftH2O @ 68°F gf/cm2 inH2O @ 39°F inH2O @ 60°F inH2O @ 68°F inHg @ 0°C kgf/cm2 kPa mbar mmH2O @ 4°C mmH2O @ 68°F cmH2O @ 4°C mH2O @ 4°C mmHg @ 0°C MPa Pa psi Torr °C, °F, °R, K	Select the Display Units for the selected PV.	Press ↵ to enter menu selection ↑ and ↓ to select from list. ↵ to enter
	Custom Units	▯▯▯▯▯▯▯▯	Enter custom text using any alphanumeric value up to 8 characters long. Custom Units is only available if PV Scaling is set to Linear or Square Root.	Custom Units: ↑ and ↓ to select Alphanumeric ↵ to enter and shift to next character
	Decimal	None X.X X.XX X.XXX	Select the decimal resolution for the PV.	Press ↵ to enter menu selection ↑ and ↓ to select from list. ↵ to enter
	Disp Low Limit	#########	Enter the lower limit shown on the Bar Graph or Trend screen	Press ↵ to enter menu selection ↑ and ↓ to select number. ↵ to enter and shift to next digit
	Disp High Limit	#########	Enter the upper limit shown on the Bar Graph or Trend screen.	
	Scaling Low	#########	Enter the low and high scaling limits. These limits are used to scale	
	Scaling High	#########		

			the displayed PV to the desired value when PV Scaling is set to either Linear or Square Root. See Notes 1 and 2 Below.	
	Custom Tag	□□□□□□□□□□□□	Enter Custom Tag using any alphanumeric text up to 14 characters long.	Press ↵ to enter menu selection ↑ and ↓ to select Alphanumeric ↵ to enter and shift to next char.

NOTES:

Screen configuration only affects the value shown on the Display. It does not affect the Loop Output.

1. Linear scaling of the displayed PV value

When "Linear" is selected for PV Scaling, the display will scale the selected PV input according to the following formula:

((PV value – input low limit) / input span) x (Scaling High – Scaling Low) + Scaling Low

If the PV Selection is Pressure, the input low and high limits are the LRV and URV respectively. If the PV Selection is Percent Output, the input low and high limits are 0 and 100%. If the PV Selection is Square Root, the input low and high limits are 0 and 100 %Flow.

Note that this scaling only affects the value shown on the Display; it does not affect the Loop Output.

2. Square Root scaling of the displayed PV value

When "Square Root" is selected for PV Scaling, the display computes %Flow from the Differential Pressure. This calculation is independent of the Transfer Function setting in the transmitter. This allows the user to output Differential Pressure via the 4-20 mA loop output while displaying the equivalent flow value on the Display. In addition, the display value can be scaled to show the flow in flow units (gal/min, gal/h, etc.) by entering the correct scaling limits via the Scaling Low and Scaling High parameters.

For example:

PV Selection:	Differential Pressure
PV Scaling:	Square Root
Scaling Low:	0.0
Scaling High:	2500.0
Display Units:	gal/h
LRV:	0.0
URV:	set as required by the process

The display will calculate 0-100 %Flow from the Differential Pressure and then scale this to 0 to 2500 gal/h.

Note that the Square Root calculation is referenced to the LRV and URV settings of the transmitter and it uses the LRV and URV to calculate the %DP input into the Square Root flow algorithm. For normal flow applications, it is assumed that the LRV is set to zero and that zero pressure equals zero flow. If the LRV is less than zero, the Square Root calculation will calculate the flow as bi-directional flow.

3. PILD Factor Value Display

The PILD Factor can be configured as screen PV selection when the PILD option is enabled. It will not display units and square root indication while displaying in large, trend or bar formats. The large PV format provides the current Up Limit and Down Limit values. The PILD Factor value is present only when PILD is enabled and while in Monitoring mode. Otherwise, the value will be replaced by a message indicating PILD is disabled or in Training mode.
The trend format provides two dotted horizontal lines on the trend chart to indicate the Up Limit and Down Limit values.

4. Field Calibration for Alternate Ranges

All ST 800 transmitters are precisely calibrated at the factory and can be calibrated at up to three sets of LRV and URV span ranges that can be specified when ordered.

Span ranges other than those calibrated at the factory may be configured and users may need to verify accuracy at those ranges using their own accuracy standards.

User calibration can be performed at two points within the span range of LRV to URV. It is critical that the pressure standard used for calibration at these two points should be certified to at least twice the pressure transmitter's accuracy. This is to prevent misleading results that can occur when pressure standards are used that are considered accurate but are actually worse than the accuracy of factory-calibrated transmitters.

Table 14 – Calibration Menus

<Return> Return to the Level 1 menu				
Set Time Stamp	**<Return>**			
	Hour	# #	These selections allow the user to enter a time stamp for the Zero Correct, LRV Correct, URV Correct, and Reset Corrects. This time stamp can be read via HART and FF communications.	Press ↵ to enter menu selection ↑ and ↓ to select number. ↵ to enter and shift to next digit ↑ and ↓ to select from list. ↵ to enter
	Minute	# #		
	Year	# # # #		
	Month	January - December		
	Day	# #		
Zero Correct	**<Return>**			
	Do Zero Correct	Executing this selection corrects the Zero based on the input pressure. The current live value of the primary pressure input is shown on this display so the user can easily see the effect of the Zero correction.		Press ↵ to enter menu selection Scroll to Do Zero Correct. Press ↵ to initiate
LRV Correct	**<Return>**			
	Do LRV Correct	Executing this selection corrects the LRV based on the input pressure. The current live value of the primary pressure input is shown on this display so the user can easily see the effect of the LRV correction.		Press ↵ to enter menu selection Scroll to Do LRV Correct. Press ↵ to initiate
URV Correct	**<Return>**			
	Do URV Correct	Executing this selection corrects the URV based on the input pressure. The current live value of the primary pressure input is shown on this display so the user can easily see the effect of the URV correction.		Press ↵ to enter menu selection Scroll to Do URV Correct. Press ↵ to initiate
Calibration Parameters	**<Return>**			
	Cal Low Point	######.##	The lower pressure value for a two-point field calibration within the LRV to URV span.	Press ↵ to enter menu selection. Press ↑ and ↓ to select number. Press ↵ to enter and shift to next digit.
	Cal High Point	######.##	The upper pressure value for a two-point field calibration within the LRV to URV span.	
	Cal Adjust Ratio	#.##	A ratio value that adjusts the calibrated curve between the Cal Low and High Points.	
	Barometric Standard (Available for AP models only)	###.###	The pressure value for an absolute pressure correction when the pressure input is open to atmosphere.	

Reset Corrects	**<Return>**		
	Reset Corrects	Executing this selection resets the Zero, LRV, URV, Cal Low, Cal High and Barometric Standard Corrects back to factory values.	Press ↵ to enter menu selection. Scroll to Reset Corrects. Press ↵ to initiate.
Cal Low Correct	**<Return>**		
	Do Cal Low Correct	Not normally used. See Field Calibration for Alternate Ranges, above. Executing this selection corrects input pressure to be at or near the Cal Low Point without compromising LRV and URV corrections. A trial-and-error approach using different Cal Adjust Ratio values and repeated executions of Cal Low Correct followed by Cal High Correct may be required. The live value of the primary pressure input is shown on this display so the user can easily see the result of the correction. Note: Cal Low Correct must be performed before Cal High Correct, but Cal High Correct may be repeated as necessary.	Press ↵ to enter menu selection. Scroll to Do Cal Low Correct. Press ↵ to initiate.
Cal High Correct	**<Return>**		
	Do Cal High Correct	Not normally used. See Field Calibration for Alternate Ranges, above. Executing this selection corrects input pressure to be at or near the Cal High Point without compromising LRV and URV corrections. A trial-and-error approach using different Cal Adjust Ratio values and repeated executions of Cal Low Correct followed by Cal High Correct may be required. The live value of the primary pressure input is shown on this display so the user can easily see the result of the correction. Note: Cal Low Correct must be performed before Cal High Correct, but Cal High Correct may be repeated as necessary.	Press ↵ to enter menu selection. Scroll to Do Cal High Correct. Press ↵ to initiate.
Barometric Standard Correct (Available for AP models only)	**<Return>**		
	Do Barometric Correct	Executing this selection corrects input pressure to the Barometric Standard value when the pressure input is open to the atmosphere. The live value of the pressure input is shown on this display so the user can easily see the result of the correction.	Press ↵ to enter menu selection. Scroll to Do Barometric Correct. Press ↵ to initiate.
SP Zero Correct (Available for DP models only)	**<Return>**		
	Do SP Zero Correct	Executing this selection corrects Static Pressure Zero based on the input static pressure. The live value of the static pressure input is shown on this display so the user can easily see the result of the correction.	Press ↵ to enter menu selection. Scroll to Reset Corrects. Press ↵ to initiate.

Reset SP Correct	**<Return>**		
	Do Reset SP Correct	Executing this selection resets Static Pressure Zero to the factory value.	Press ↵ to enter menu selection. Scroll to Reset Corrects. Press ↵ to initiate.
DAC Trim Note: Loop must be removed from Automatic Control	**<Return>**		
	Trim Zero	This selection will calibrate the loop zero output to 4.000 mA Connect a current meter to the transmitter to monitor the loop output. When you press Enter, the transmitter will set the loop output to 4 mA. When the prompt "Enter reading" appears, enter the value shown on the current meter (in milliamps) and press Enter again. The transmitter will adjust the DAC output to 4mA.	Press ↵ to enter menu selection Scroll to Trim Zero or Trim Span Press ↵ to initiate ↑ and ↓ to select number. ↵ to enter and shift to next digit
	Trim Span	This selection will calibrate the loop span output to 20.000 mA Connect a current meter to the transmitter to monitor the loop output. When you press Enter, the transmitter will set the loop output to 20 mA. When the prompt "Enter reading" appears, enter the value shown on the current meter (in milliamps) and press Enter again. The transmitter will adjust the DAC output to 20 mA.	
	Set DAC Normal	This selection allows the loop to be returned to its Normal mode (Automatic Control) after performing the Trim operation.	Press ↵ to enter menu selection Scroll to Set DAC Normal Press ↵ to initiate
Loop Test Note: Loop must be removed from Automatic Control	**<Return>**		
	Set DAC Output	This selection allows the user to force the DAC output to any value between 3.8 and 20.8 mA. Note: This selection will put the DAC into Fixed Output Mode.	Press ↵ to enter menu selection Scroll to Set DAC Output. Press ↵ to initiate Press ↑ or ↓ to select number. Press ↵ to enter and shift to next digit.
	Set DAC Normal	This selection allows the loop to be returned to its Normal mode (Automatic Control) after performing the Set DAC Output operation.	Press ↵ to enter menu selection Scroll to Set DAC Normal Press ↵ to initiate
Factory Cal	**<Return>**		
	Active Cal Set	Displays the calibration used by the transmitter.	
	Select Cal Set	<Return>	

		Cal Set A	This selection allows the user to choose calibration set from drop-down menu.	Press ↵ to enter menu selection Press ↑ or ↓ to select calibration type. ↵ to initiate
		Cal Set B*		
		Cal Set C**		
		Best Fit		

NOTES:
* "Cal Set B" item in menu is available only if sensor supports Dual calibration
** "Cal Set C" item in menu will be available only if sensor supports Triple calibration.

Table 15 – Transmitter Setup Menus

<Return> Return to the Level 1 menu				
Parameters	**<Return>**			
	Tag ID	▯▯▯▯▯▯▯▯	Enter Tag ID name up to 8 characters long. ▯ = any Alphanumeric value	Press ↵ to enter menu selection ↑ and ↓ to select Alphanumeric ↵ to enter and shift to next character to the right.
	Damping (sec)	##. #	Selection applies digital filtering to suppress noise effects on the PV. The limits for this value are 0.0 to 32.0 seconds.	Press ↵ to enter menu selection Press ↑ and ↓ to select number. Press ↵ to enter and shift to next digit.
	NAMUR Selection	Disabled	Disabling sets the loop output and burnout levels to the Honeywell levels	Press ↵ to enter menu selection. Press ↑ and ↓ to select from list. Press ↵ to enter.
		Enabled	Enabling sets the loop output and burnout levels to the NAMUR levels	
	Filter Performance	Fast SOR	Fast Speed of Response	
		Std SOR	Standard Speed of Response	
	Transfer Function (Available only for DP transmitters)	Linear	The loop output of the transmitter is a linear representation of the differential pressure.	Press ↵ to enter menu selection. Press ↑ and ↓ to select from list. Press ↵ to enter.
		Square Root	The loop output of the transmitter represents %Flow as defined by the DP Square Root flow equation.	
	Flow Cutoff (Available only when Transfer Function is Square Root)	Single Breakpt	Allows the user to specify a single breakpoint as the low flow cutoff point.	Press ↵ to enter menu selection. Press ↑ and ↓ to select from list. Press ↵ to enter.
		Dual Slope	Uses a dual slope formula to determine the low flow cutoff point.	
		Zero flow	Sets loop output to 0 %Flow when the differential	

			pressure is below the low flow cutoff point. Note: Sets loop output to low saturation when the differential pressure is below -10% Flow.	
	Breakpt (%Flow) (Available only when Transfer Function is Square Root)	##. #	Enter the low flow cutoff point when Single Breakpt or Zero Flow is selected. Range: 0.0 to 25.0 %Flow.	Press ↵ to enter menu selection. Press ↑ and ↓ to select number. Press ↵ to enter and shift to next digit.

Enter LRV	**<Return>**			
	Enter LRV	###. ##	The limit for the Lower Range Value is 2X the Lower Range Limit (LRL) of the Meter Body	
Enter URV	**<Return>**			
	Enter URV	###. ##	The limit for the Upper Range Value is 2X the Upper Range Limit (URL) of the Meter Body	
Set LRV	**<Return>**			
	Set LRV	ATTENTION: Executing this service will set the Lower Range Value (LRV) equal to the input pressure.		Press ↵ to enter menu selection ↵ to execute
Set URV	**<Return>**			
	Set URV	ATTENTION: Executing this service will set the Upper Range Value (URV) equal to the input pressure.		Press ↵ to enter menu selection ↵ to execute
HART Setup	**<Return>**			
	Device ID	Unique for each device		Read Only
	Universal Rev	HART Revision		Read Only
	Field Device Rev	For DD/DTM compatibility		Read Only
	Final Assy Num	Asset tracking number		
	Loop mA	Disabled for Multidrop		
	Poll Address	0 (default) to 63		
	PV Units	Units of transmitted PV		
	SV Units	Units of transmitted SV		
HART Date	**<Return>**			
	Year	# # # #	Enter the current year.	
	Month	January - December	Select the current month.	
	Day	# #	Enter the day of the month.	
	Write Date	Press ENTER to write the HART Date to the transmitter.		

Install Date	**<Return>**			
	Year	# # # #	Enter the current year. This item will only be visible if no Install Date has been written to the transmitter.	
	Month	January - December	Select the current month. This item will only be visible if no Install Date has been written to the transmitter.	
	Day	# #	Enter the day of the month. This item will only be visible if no Install Date has been written to the transmitter.	
	Install Date	dd-mmm-yyyy	If no Install Date has been set in the transmitter, this value is a preview of the Year, Month, and Day entered above. Otherwise, this is the Install Date that was previously written to the transmitter.	
	Write Date	Press ENTER to write the Install Date to the transmitter. **CAUTION**: The Install Date can only be written once in the life of the transmitter. You cannot erase or overwrite the Install Date once it has been written.		
PILD (Available only if the PILD option is enabled)	<Return>			
	PILD	Disabled	Disables PILD detection	Press ↵ to enter menu selection ↑ and ↓ to select Disabled or Enabled. ↵ to initiate. This option will be available only if sensor supports PILD feature
		Enabled	Enables PILD detection	
	Application	<Return>	**See Note below.**	Press ↵ to enter menu selection ↑ and ↓ to select Application Type. ↵ to initiate.
		DP Flow (Available only for DP transmitter)		
		Marine Level		
		Bubbler Level		
		Other		

PILD (Available only if the PILD option is enabled)	Sample Window	##	The sampling window of PILD in minutes, which determines the cycle of PILD runs for both training and monitoring mode. Enter the sample window Value. Range: 3 mins, 6 mins, 9 mins, 12 mins, 15 mins. **See Note below.**	Press ↵ to enter menu selection ↑ and ↓ to select number. ↵ to enter and shift to next digit.
	Up Limit	#.##	The up limit of PILD factor for normal status... Enter the Up Limit Value. Range: 0.50 to 1.00. **See Note below.**	Press ↵ to enter menu selection ↑ and ↓ to select number. ↵ to enter and shift to next digit
	Down Limit	#.##	The Down limit of PILD factor for normal status... Enter the Down Limit Value. Range: Both Limit to 0.50 **See Note below.**	Press ↵ to enter menu selection ↑ and ↓ to select number. ↵ to enter and shift to next digit
	Both Limit	#.##	The Both sides blockage limit of PILD. Enter the Both Limit Value. Range: 0.00 to Down Limit. It is applicable for only DP transmitter. **See Note below.**	Press ↵ to enter menu selection ↑ and ↓ to select number. ↵ to enter and shift to next digit
	HPF f0	#.#	The High Pass Filter (HPF) Cut off Frequency (f_0) reduces noise fluctuations in the PILD Factor measured value. Enter the HPF f0 Value. Range: 0.0 to 5.0. **See Note below.**	Press ↵ to enter menu selection ↑ and ↓ to select number. ↵ to enter and shift to next digit

Note:
This parameter will be “Read Only” when the user configures PILD as Enabled in this sub menu. An attempt to configure this parameter will then invoke the pop-up message “Read Only! PILD Active”. The parameters Up Limit, Down Limit and Both Limit are available to change in Monitoring mode while PILD is enabled. An attempt to change these parameters in Training mode results in the pop-up "Read Only! Training Mode".

Table 16 – Information Menus

<Return> Return to the Level 1 menu			
Display	**<Return>**		
	Firmware Version	The firmware version of the Display module	Read Only
Elec Module	**<Return>**		
	Firmware Version	The firmware version of the Electronics Module	Read Only
	HART/DE Version	The firmware version number of the Electronics Module as displayed via the HART and DE protocols	Read Only
	Protocol	The communications protocol of the transmitter: • HART: HART protocol • DE: Honeywell DE protocol • FF: Foundation Fieldbus	Read Only
Meter Body	**<Return>**		
	Firmware Version	The firmware version of the Meter body	Read Only
	Model Key	Identifies the type and range of the transmitter	Read Only
	Units	The Engineering Units for the LRL and URL. Note that you can change these Units from the transmitter Setup menu, if desired (transmitter Setup\Parameters\Units)	Read Only
	LRL	The Lower Range Limit of the Meter body	Read Only
	URL	The Upper Range Limit of the Meter body	Read Only
Options	**<Return>**		
	PILD	Available/Not Available	Read Only
	Serial Number	Unique serial number of the transmitter	Read Only
	License Key	######## License key to enable PILD option	Write only (enter numeric license key

5.2.6 The Basic Display Menu

The basic display menu is implemented as one long single-level menu and will "wrap around" when it reaches the start or end of the menu. Operation is as follows:

Press the ↵ button to call up the menu.

1. Select <**Exit Menu**> and press ↵ to exit the menu.
2. Use the ↑ and ↓ buttons to scroll through the list of menu items.
3. Press the ↵ button to select an item for data entry or activation. When an item is selected for data entry or activation, the cursor will jump to the lower line of the LCD to allow editing of the value.

   No action is taken against a menu item until the user presses the ↵ button.
4. If you want to abort a data entry operation, simply refrain from pushing any buttons for 10 seconds; the data entry operation will time out and the original value of the selected item will be preserved.

Table 17 – The Basic Display Menu

Menu	Submenu/Selection/ Value Entry	Description		Action
LCD Contrast	»»»»»»	Adjust the LCD contrast level. Range from » (1) to »»»»»»»»»»»» (9) Default: »»»»»»»»»(7)		Press ↵ to enter menu selection ↑ and ↓ to select level. ↵ to enter
PV Display	Pressure	Pressure Units	Select Process Variable (PV) to be shown on the display from list.	
	Percent Output	%		
	Loop Output	mA		
PV Decimal	None	Select the PV decimal resolution to be shown on selected screen from list.		
	X.X			
	X.XX			
	X.XXX			
Pressure Units	atm, bar ftH_2O @ 68ºF gf/cm^2 inH_2O @ 39ºF inH_2O @ 60ºF inH_2O @ 68ºF inHg @ 0ºC kgf/cm^2, kPa mbar, mmH_2O @ 4ºC, mmH_2O @ 68ºF, mmHg @ 0ºC, MPa, Pa, psi Torr, mHg @ 0ºC cmH_2O@4DegC mH_2O@4DegC	Choose appropriate engineering units from list		
Zero Correct	Do Correct	Executing this selection corrects the Zero based on the input pressure		Press ↵ to enter menu selection Press ↵ to initiate action
LRV Correct	Do Correct	Executing this selection corrects the LRV based on the input pressure		
URV Correct	Do Correct	Executing this selection corrects the URV based on the input pressure		
Reset Corrects	Do Correct	Executing this selection Resets the Zero, LRV, and URV Corrects back to Factory values		
DAC Zero Trim Note: Loop must be removed from Automatic Control	DAC Zero Trim	This selection allows the loop zero output 4mA value to be trimmed. Note: You must connect a current meter to the transmitter to monitor the loop output.		Press ↵ to enter menu selection ↑ and ↓ to select number. ↵ to enter and shift to the next digit to the right

Menu	Submenu/Selection/ Value Entry	Description	Action
DAC Span Trim Note: Loop must be removed from Automatic Control	DAC Span Trim	This selection allows the loop span output 20mA value to be trimmed. Note: You must connect a current meter to the transmitter to monitor the loop output.	Press ↵ to enter menu selection ↑ and ↓ to select number. ↵ to enter and shift to the next digit to the right
Loop Test Note: Loop must be removed from Automatic Control	Loop Test 12.000	This selection allows the user to force the DAC output to any value between 3.8 and 20.8 mA. Note: This selection will put the DAC into Fixed Output Mode, as indicated by the flashing output value. Navigation away from this menu item will return the loop to Normal (Automatic) Mode.	
LRV URV	#. ## #. ##	The limits are: 2X the Lower Range Limit (LRL) of the Meter body and 2X the Upper Range Limit (URL) of the Meter body	
Damping	#. ##	Selection applies digital filtering to suppress noise effects on the PV. The limits for this value are 0.0 to 32.0 seconds	
NAMUR	Enabled Disabled	Disabling sets the loop output and burnout levels to the Honeywell levels	Press ↵ to enter menu selection ↑ and ↓ to select from list ↵ to enter
Filter Perf	Fast SOR Standard SOR	Fast Speed of Response Standard Speed of Response	
Transfer Function (only available for DP transmitters)	Linear	The loop output of the transmitter is a linear representation of the differential pressure	Press ↵ to enter menu selection ↑ and ↓ to select Alphanumeric ↵ to enter and shift to next character to the right.
	Square Root	The loop output of the transmitter represents %Flow as defined by the DP Square Root flow equation.	

Menu	Submenu/Selection/ Value Entry	Description	Action
Flow Cutoff	Single Breakpt	Allows the user to specify a single breakpoint as the low flow cutoff point. This item is only available when the Transfer Function is set to Square Root.	
	Dual Slope	Uses a dual slope formula to determine the low flow cutoff point. This item is only available when the Transfer Function is set to Square Root.	
Flow Breakpoint	##. #%	Enter the low flow cutoff point when Single Breakpt is selected. Range: 0 to 25.0 %Flow.	
Tag ID	□□□□□□□□	Enter Tag ID name up to 8 characters long. □ = any Alphanumeric value	Press ↵ to enter menu selection ↑ and ↓ to select Alphanumeric ↵ to enter and shift to next character to the right.
Device ID	Unique for each device		Read Only
PV Units	Units of transmitted PV		
Install Date	DD MM YYYY	This selection allows the user to enter the date a transmitter is installed. The Install Date is entered in sequence of Day, Month, and Year, followed by the new date and the prompt Write Date to confirm the entry. **CAUTION**: The Install Date can only be written once in the life of the transmitter. You cannot erase or overwrite the Install Date once it has been written.	Press ↵ to enter menu selection ↑ and ↓ to select number ↵ to enter and shift to next digit to the right. Read Only after entered
Firmware	Display Electronics Meter Body	Menu item shows the current Firmware versions of the display, electronics module and meter body	Read Only Parameter
Protocol	HART DE	Menu item shows the communications protocol	
Model Key		Identifies the type and range of the transmitter	Read Only Parameter
<Exit Menu>			

5.2.7 Data Entry

Data entry is performed from left to right. Select a character / digit by pressing ↑ or ↓ buttons, and then press ↵ to advance to the next character position to the right. Select the crosshatch character ▒ to terminate the entry or if the final character is already a space character, just press **<<** again.

All numeric entries are clamped at the low or high limit if needed. You can determine the low and high limit for a parameter by selecting either the **H** or **L** character while the cursor is positioned over the left-most digit and press ↵ button. The display will show the selected limit.

Table 18 – Three-Button Data Entry

Screen Symbol	Numeric data entry	Text entry
H	Display the high limit for this parameter. This symbol only appears in the left-most position of the data entry field.	Not Available
L	Display the low limit for this parameter. This symbol only appears in the left-most position of the data entry field.	Not Available
<<	Terminate the numeric entry.	Terminate the text entry
0 thru 9, Minus, Decimal	These characters are used to enter numeric values. The minus sign only appears in the left-most digit.	These characters can be used to enter the Tag ID

5.2.8 Editing a Numeric value

Editing of a numeric value is a digit-by-digit process, starting with the left-most digit.

5. Press ↵ to begin the edit process.
6. The basic display will show the current value of the item on the lower line, left justified.
7. Press the ↑ or ↓ buttons to select the desired digit, and then press ↵ to advance to the next digit to the right.
8. After the last digit has been entered, press ↵ one more time to write the new value to the transmitter.

5.2.9 Selecting a new setting from a list of choices

Use the procedure described below to select a new setting for parameters that present a list of choices (e.g., PV Display, Pressure Units, etc.).

5. Press ↵ to begin the edit process.
    a. The basic display will show the current setting of the item on the lower line, left justified.
6. Press the ↑ or ↓ buttons to scroll through the list of choices.

Press ↵ to make your selection. The new selection will be stored in the transmitter and will be displayed on the lower line, right justified.

5.3 Two-Button Operation

The ST 700 standard transmitter has an optional two-button interface that provides a user interface that supports in both English and Russian Language and operation capability without opening the transmitter. Figure 18 shows the location of the two-button option and the labels for the buttons.

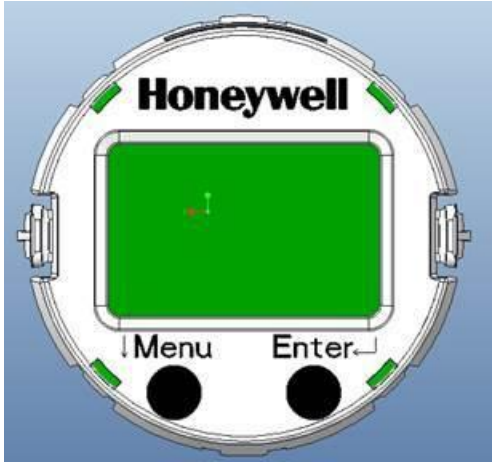

Figure 18 – ST 700 Standard Transmitter - Two-Button Option

5.3.1 The Standard Display Menu

The standard display menu is implemented as one long single-level menu, after entering menu mode and will "wrap around" when it reaches the end of the menu. To enter menu mode, select ↵ in PV display mode. Operation is as follows:

1. Select <**Exit Menu**> and press ↵ to exit the menu.
2. Use the ↓ button to scroll through the list of menu items.
3. Press the ↵ button to select an item in menu mode for data entry or activation. When an item is selected for data entry or activation, the cursor will jump to the lower line of the LCD to allow editing of the value. No action is taken against a menu item until the user presses the ↵ button.
4. If you want to abort a data entry operation, simply refrain from pushing any buttons for more than 10 seconds; the data entry operation will time out and the original value of the selected item will be preserved.
5. If you want to abort a menu operation, simply refrain from pushing any buttons for more than 60 seconds; the menu operation will time out and the exit from menu and it will show PV value.

The menu is divided into standard menu and extended menu which can be enabled and disabled by extended menu enable/disable operation.

Note: The abort option is not available for Loop test parameter. The timeout for the DAC trim operation is more to enable user to calculate the loop current value to enter.

Table 19 – ST 700 Standard Transmitter: Standard Display Menu

Menu	Submenu/Selection/ Value Entry	Description	Action
Pressure Units [1UNITS]	atm bar ftH2O68F gf/cm2 inH2O39F inH2O60F inH2O68F inHg0C kgf/cm2 kPa mbar mmH2O4C mmH2O68F mmHg0C MPa Pa psi Torr mH2O4C cmH2O4C	Choose appropriate engineering units from list for calibration and writing LRV/URV This selection determines the units of the values shown on the following menu items: • Enter LRV • Enter URV • Set LRV • Set URV • Zero Correct • LRV Correct • URV Correct • Cal Low Point • Cal High Point • Cal Low Correct • Cal High Correct • Barometric Correct For calibration, this parameter allows the user to match the value displayed on the menus to the units supported by the user's calibration equipment.	Press ↵ to enter menu selection ↓Menu to select from list ↵ to enter
Enter LRV [2ENTLRV] Enter URV [3ENTURV]	###. ## ###. ##	The limits are: 2X the Lower Range Limit (LRL) of the Meter Body and 2X the Upper Range Limit (URL) of the Meter Body. The LRV/URV value will be available in Pressure Units (Simple Display pressure unit)	Press ↵ to enter menu selection ↓ Menu to select number. ↵ to enter and shift to the next digit to the right

SET Zero [4SETZRO]	Zero Trim	perform an input calibration correction by applying process input at zero.	Press ↵ to enter menu selection Press ↵ to initiate action
DAC Zero Trim [5ZEROTR] Note: Loop must be removed from Automatic Control	DAC Zero Trim	This selection allows the loop zero output 4mA value to be trimmed. Note: You must connect a current meter to the transmitter to monitor the loop output.	Press ↵ to enter menu selection ↓ Menu to select number. ↵ to enter and shift to the next digit to the right
DAC Span Trim [6SPANTR] Note: Loop must be removed from Automatic Control	DAC Span Trim	This selection allows the loop span output 20mA value to be trimmed. Note: You must connect a current meter to the transmitter to monitor the loop output.	
Loop Test [7 LPTEST] Note: Loop must be removed from Automatic Control	Loop Test 12.000	This selection allows the user to force the DAC output to any value between 3.8 and 20.8 mA. Note: This selection will put the DAC into Fixed Output Mode, as indicated by the flashing output value. Navigation away from this menu item will return the loop to Normal (Automatic) Mode.	Press ↵ to enter menu selection ↓ to select number. ↵ to enter and shift to the next digit to the right
Set LRV [8SETLRV]	Set LRV	Executing this selection performing for Zero operation. Note: The PV value shown in bottom line will be available in Pressure Units (Simple Display pressure unit)	Press ↵ to enter menu selection Press ↵ to initiate action

Set URV [9SETURV]	Set URV	Executing this selection for Span operation Note: The PV value shown in bottom line will be available in Pressure Units (Simple Display pressure unit)	
Contrast [10CNTRST]	Contrast level	Adjust the LCD contrast level. Range from » (1) to »»»»»»»»»»» (7) Default: »»»»»»»» (7)	Press ↵ to enter Menu selection Menu to select level. ↵ to Enter
LRV Corrects [11LRVCOR]	Calibration Methods	Perform an input calibration correction by applying process input at the configured LRV level.	Press ↵ to enter menu selection Press ↵ to initiate action
URV Corrects [12URVCOR]	Calibration Methods	Perform an input calibration correction by applying process input at the configured URV level.	Press ↵ to enter menu selection Press ↵ to initiate action
Reset Corrects [13RSTCOR]	Calibration Methods	Executing this selection resets the Zero, LRV, URV, Cal Low, Cal High and Barometric Standard Corrects back to factory values.	Press ↵ to enter menu selection Press ↵ to initiate action
Tag Id [14TAGID]	□□□□□□□□	Character string of device tag text for display x = any Alphanumeric value.	Press ↵ to enter menu selection ↓ to select alphanumeric character. ↵ to enter and shift to the next character to the right
Device Firmware [15DEVFW]	□□□□□□□□	Menu item shows the current Firmware version of the device. x = any numeric value.	↓Menu to select from list ↵ to enter
Sensor Firmware [16SENFW]	□□□□□□□□	Menu item shows the current Firmware version of the sensor. x = any numeric value.	↓Menu to select from list ↵ to enter

PV Damping [17PVDAMP]	##.#	Enter a value for damping of the device output. Entries may be any value from 0.00 to 32.00 seconds.	Press ↵ to enter menu selection ↓ to select number. ↵ to enter and shift to the next digit to the right
Filter Selection [18FLTSEL]	STDSOR FASTSOR	Configure the desired performance for the Output Speed of Response Filter. Select from: Standard SOR: excellent speed of response to input changes with optimal noise performance Fast SOR: fastest speed of response to input changes.	Press ↵ to enter menu selection ↓Menu to select from list ↵ to enter
NAMUR [19NAMUR]	DISABLE ENABLE	select to enable or disable the Namur option for effect on output signal.	Press ↵ to enter menu selection ↓Menu to select from list ↵ to enter
Language Selection [20LNGSEL]	ENGLISH RUSSIAN	Standard display language selection: Select English or Russian option to show display in selected language.	Press ↵ to enter menu selection ↓Menu to select from list ↵ to enter
Transfer Function [21TXFRFN]	LINEAR SQRT	Pressure Transfer function: Select the pressure transfer function for calculated output: Linear: (output scaled linearly per configured range) Square Root: (output scaled as square root conversion per configured range - for flow measurements).	Press ↵ to enter menu selection ↓Menu to select from list ↵ to enter

Low Flow Cut Off Mode [22CUTFMD]	ZROFLOW SBRKPT DUALSLP	Low Flow Cutoff Mode: For Square Root (Transfer function) configurations only, choose the operating mode to determine the low flow cutoff breakpoint: Dual slope: (breakpoint determined by dual slope calculation) User configuration: (breakpoint defined by user). Zero Flow: Sets analog output to 4mA when square root / flow is below user defined flow cutoff value. Note: Sets loop output to low saturation when the differential pressure is below –10%Flow.	Press ↵ to enter menu selection ↓Menu to select from list ↵ to enter
Low Flow Cut Off Breakpoint [23%FLOW]	##.#	When “User Configuration” is selected for Low Flow Cutoff Mode, enter the desired breakpoint value.	Press ↵ to enter menu selection ↓ to select number. ↵ to enter and shift to the next digit to the right
SP Zero Correct [24SPZRO]	Corrects the static pressure to a zero-value psi for DP transmitters only	Performs the correction of measured static pressure value to a value of zero psi. Executing this selection corrects Static Pressure Zero based on the input static pressure. The live value of the static pressure input is shown on this display so the user can easily see the result of the correction.	Press ↵ to enter menu selection Press ↵ to initiate action
SP Reset Correct [25SPRST]	Resets SP Zero Correct	Executing this selection resets Static Pressure Zero to the factory value of 0.	Press ↵ to enter menu selection Press ↵ to initiate action

Barometric Standard [26BARSTD]	###. ###	Available for AP models only. The pressure value for an absolute pressure correction when the pressure input is open to the atmosphere. Enter an atmospheric pressure value corresponding to a barometric standard. If the difference between the measured atmospheric pressure and the user-entered barometric standard pressure is > 1 psi (27.680672 inH2O [4°C]) the calibration will not be performed. Range: 330-490 inH2O [4°C] Default: 406.782 inH2O [4°C]	Press ↵ to enter menu selection ↓ Menu to select number. ↵ to enter and shift to the next digit to the right
Barometric Correct [27BARCOR]	One point field offset Calibration Method.	Available for AP models only. Executing this selection corrects input pressure to the Barometric Standard value when the pressure input is open to the atmosphere. The live value of the pressure input is shown on this display so the user can easily see the result of the correction.	Press ↵ to enter menu selection Press ↵ to initiate action
Calibrate High Point [28CAL HI]	######. ##	The upper pressure value for a two-point field calibration within the LRV to URV span. Cal high point value is in inH2O [4°C]. Range: LRV to URV Default: URV	Press ↵ to enter menu selection ↓ Menu to select number. ↵ to enter and shift to the next digit to the right
Calibrate Low Point [29CAL LO]	######. ##	The lower pressure value for a two-point field calibration within the LRV to URV span. Cal low point value is in inH2O [4°C]. Range: LRV to URV Default: LRV	Press ↵ to enter menu selection ↓ Menu to select number. ↵ to enter and shift to the next digit to the right

Calibrate Adjust Ratio [30CALRTO]	#. ##	A ratio value that adjusts the calibrated curve between the Cal Low and High Points. Error Adjustment Ratio Range: 0.5 to 1.5 Default: 1.0	Press ↵ to enter menu selection ↓ Menu to select number. ↵ to enter and shift to the next digit to the right
Calibrate Low Correct [31LO COR]	Two-point Field Accuracy Calibration Method for DP/AP/GP transmitters	Not normally used. See Field Calibration for Alternate Ranges, below. Executing this selection corrects input pressure to be at or near the Cal Low Point without compromising LRV and URV corrections. A trial-and-error approach using different Cal Adjust Ratio values and repeated executions of Cal Low Correct followed by Cal High Correct may be required. The live value of the primary pressure input is shown on this display so the user can easily see the result of the correction. Note: Cal Low Correct must be performed before Cal High Correct, but Cal High Correct may be repeated as necessary.	Press ↵ to enter menu selection Press ↵ to initiate action
Calibrate High Correct [32 HI COR]	Two-Point Field Accuracy Calibration Method for DP/AP/GP transmitters	Not normally used. See Field Calibration for Alternate Ranges, below. Executing this selection corrects input pressure to be at or near the Cal High Point without compromising LRV and URV corrections. A trial-and-error approach using different Cal Adjust Ratio values and repeated executions of Cal Low Correct followed by Cal High Correct may be required. The live value of the primary pressure input is shown on this display so the user can easily see the result of the correction. Note: Cal Low Correct must be performed before Cal High Correct, but Cal High Correct may be repeated as necessary.	Press ↵ to enter menu selection Press ↵ to initiate action

Screen Rotation [33 SCRROT]	OFF ON	Automatic display screens switch function.: Select 'ON' or 'OFF' to rotate display screens automatically.	Press ↵ to enter menu selection ↓Menu to select from list ↵ to enter
Rotation Interval [34ROTINT]	Display rotation enumerations: 1- 2s 2- 4s 3- 6s 4- 8s 5- 10s 6- 12s 7- 14s 8- 16s 9- 18s 10- 20s	When "ON" is selected for Rotation Interval, enter the desired interval time. Automatic display screen rotation in seconds: Range: 2-20 seconds Default:4 seconds.	Press ↵ to enter menu selection ↓Menu to select from list ↵ to enter
Screen1 PV Selection [35SCRN1]	Display PV enumerations: 1- PRESSURE 2- % OUT 3- LOOPOUT 4- FLOW	Select Process Variable (PV) to be shown on the display from list.	Press ↵ to enter menu selection ↓Menu to select from list ↵ to enter
Screen1 Pressure Units [36PUNIT]	atm bar ftH2O68F gf/cm2 inH2O39F inH2O60F inH2O68F inHg0C kgf/cm2 kPa mbar mmH2O4C mmH2O68F mmHg0C MPa Pa psi Torr mH2O4C cmH2O4C Custom	Choose appropriate engineering units from list.	Press ↵ to enter menu selection ↓Menu to select from list ↵ to enter

Screen1 Flow Units [37FUNIT]	m3/hr kg/hr MT/hr L/sec L/hr SCFH CFH gal/hr bbl/hr Igal/hr % SCFD gal/min lb/hr lb/min SCFM MSCFH MMSCFH Custom	Choose appropriate engineering units from list.	Press ↵ to enter menu selection ↓Menu to select from list ↵ to enter
Screen1 Flow Custom Unit [38FCUNIT]	□□□□□□□□	When “Custom” selected for Screen1 Flow Units, enter the custom unit name. Character string of flow custom unit text for display. x = any Alphanumeric value	Press ↵ to enter menu selection ↓ to select alphanumeric character. ↵ to enter and shift to the next character to the right
Screen1 Flow Scaling Low [39FSCLLO]	########	Value of the flow custom engineering unit corresponding to the LRV of the transmitter. The limits are: -999999 to 999999	Press ↵ to enter menu selection ↓ Menu to select number. ↵ to enter and shift to the next digit to the right
Screen1 Flow Scaling High [40FSCLHI]	########	Value of the flow custom engineering unit corresponding to the URV of the transmitter. The limits are: -999999 to 999999	Press ↵ to enter menu selection ↓ Menu to select number. ↵ to enter and shift to the next digit to the right

Screen1 Pressure Custom Unit [41PCUNIT]	□□□□□□□□	When “Custom” selected for Screen1 Pressure Units, enter the custom unit name. Character string of pressure custom unit text for display x = any Alphanumeric value.	Press ↵ to enter menu selection ↓ to select alphanumeric character. ↵ to enter and shift to the next character to the right
Screen1 Pressure Scaling Low [42PSCLLO]	########	When “Custom” selected for Screen1 Pressure Units, enter the Screen1 Pressure Scaling Low value. Value of the pressure custom engineering unit corresponding to the LRV of the transmitter. The limits are: -999999 to 999999	Press ↵ to enter menu selection ↓ Menu to select number. ↵ to enter and shift to the next digit to the right
Screen1 Pressure Scaling High [43PSCLHI]	########	When “Custom” selected for Screen1 Pressure Units, enter the Screen1 Pressure Scaling High value. Value of the pressure custom engineering unit corresponding to the URV of the transmitter. The limits are: -999999 to 999999	Press ↵ to enter menu selection ↓ Menu to select number. ↵ to enter and shift to the next digit to the right
Screen2 PV Selection [44SCRN2]	Display PV enumerations: 0- None 1- PRESSURE 2- % OUT 3- LOOPOUT 4- FLOW	Select Process Variable (PV) to be shown on the display from list.	Press ↵ to enter menu selection ↓Menu to select from list ↵ to enter

Screen2 Pressure Units [45PUNIT]	atm bar ftH2O68F gf/cm2 inH2O39F inH2O60F inH2O68F inHg0C kgf/cm2 kPa mbar mmH2O4C mmH2O68F mmHg0C MPa Pa psi Torr mH2O4C cmH2O4C Custom	Choose appropriate engineering units from list.	Press ↵ to enter menu selection ↓Menu to select from list ↵ to enter
Screen2 Flow Units [46FUNIT]	m3/hr kg/hr MT/hr L/sec L/hr SCFH CFH gal/hr bbl/hr Igal/hr % SCFD gal/min lb/hr lb/min SCFM MSCFH MMSCFH Custom	Choose appropriate engineering units from list.	Press ↵ to enter menu selection ↓Menu to select from list ↵ to enter
Screen2 Flow Custom Unit [47FCUNIT]	□□□□□□□□	When “Custom” selected for Screen2 Flow Units, enter the custom unit name. Character string of flow custom unit text for display x = any Alphanumeric value.	Press ↵ to enter menu selection ↓ to select alphanumeric character. ↵ to enter and shift to the next character to the right

Screen2 Flow Scaling Low [48FSCLLO]	########	Value of the flow custom engineering unit corresponding to the LRV of the transmitter. The limits are: -999999 to 999999	Press ↵ to enter menu selection ↓ Menu to select number. ↵ to enter and shift to the next digit to the right
Screen2 Flow Scaling High [49FSCLHI]	########	Value of the flow custom engineering unit corresponding to the URV of the transmitter. The limits are: -999999 to 999999	Press ↵ to enter menu selection ↓ Menu to select number. ↵ to enter and shift to the next digit to the right
Screen2 Pressure Custom Unit [50PCUNIT]	□□□□□□□□	When “Custom” selected for Screen2 Pressure Units, enter the custom unit name. Character string of pressure custom unit text for display x = any Alphanumeric value.	Press ↵ to enter menu selection ↓ to select alphanumeric character. ↵ to enter and shift to the next character to the right
Screen2 Pressure Scaling Low [51PSCLLO]	########	When “Custom” selected for Screen2 Pressure Units, enter the Screen2 Pressure Scaling Low value. Value of the pressure custom engineering unit corresponding to the LRV of the transmitter. The limits are: -999999 to 999999	Press ↵ to enter menu selection ↓ Menu to select number. ↵ to enter and shift to the next digit to the right

Screen2 Pressure Scaling High [52PSCLHI]	########	When “Custom” selected for Screen2 Pressure Units, enter the Screen2 Pressure Scaling High value. Value of the pressure custom engineering unit corresponding to the URV of the transmitter. The limits are: -999999 to 999999	Press ↵ to enter menu selection ↓ Menu to select number. ↵ to enter and shift to the next digit to the right
Screen3 PV Selection [53SCRN3]	Display PV enumerations: 0- None 1- PRESSURE 2- % OUT 3- LOOPOUT 4- FLOW	Select Process Variable (PV) to be shown on the display from list.	Press ↵ to enter menu selection ↓Menu to select from list ↵ to enter
Screen3 Pressure Units [54PUNIT]	atm bar ftH2O68F gf/cm2 inH2O39F inH2O60F inH2O68F inHg0C kgf/cm2 kPa mbar mmH2O4C mmH2O68F mmHg0C MPa Pa psi Torr mH2O4C cmH2O4C Custom	Choose appropriate engineering units from list.	Press ↵ to enter menu selection ↓Menu to select from list ↵ to enter

Screen3 Flow Units [55FUNIT]	m3/hr kg/hr MT/hr L/sec L/hr SCFH CFH gal/hr bbl/hr Igal/hr % SCFD gal/min lb/hr lb/min SCFM MSCFH MMSCFH Custom	Choose appropriate engineering units from list.	Press ↵ to enter menu selection ↓Menu to select from list ↵ to enter
Screen3 Flow Custom Unit [56FCUNIT]	□□□□□□□□	When “Custom” selected for Screen3 Flow Units, enter the custom unit name. Character string of flow custom unit text for display x = any Alphanumeric value.	Press ↵ to enter menu selection ↓ to select alphanumeric character. ↵ to enter and shift to the next character to the right
Screen3 Flow Scaling Low [57FSCLLO]	########	Value of the flow custom engineering unit corresponding to the LRV of the transmitter. The limits are: -999999 to 999999	Press ↵ to enter menu selection ↓ Menu to select number. ↵ to enter and shift to the next digit to the right
Screen3 Flow Scaling High [58FSCLHI]	########	Value of the flow custom engineering unit corresponding to the URV of the transmitter. The limits are: -999999 to 999999	Press ↵ to enter menu selection ↓ Menu to select number. ↵ to enter and shift to the next digit to the right

Screen3 Pressure Custom Unit [59PCUNIT]	□□□□□□□□	When “Custom” selected for Screen3 Pressure Units, enter the custom unit name. Character string of pressure custom unit text for display x = any Alphanumeric value.	Press ↵ to enter menu selection ↓ to select alphanumeric character. ↵ to enter and shift to the next character to the right
Screen3 Pressure Scaling Low [60PSCLLO]	########	When “Custom” selected for Screen3 Pressure Units, enter the Screen3 Pressure Scaling Low value. Value of the pressure custom engineering unit corresponding to the LRV of the transmitter. The limits are: -999999 to 999999	Press ↵ to enter menu selection ↓ Menu to select number. ↵ to enter and shift to the next digit to the right
Screen3 Pressure Scaling High [61PSCLHI]	########	When “Custom” selected for Screen3 Pressure Units, enter the Screen3 Pressure Scaling High value. Value of the pressure custom engineering unit corresponding to the URV of the transmitter. The limits are: -999999 to 999999	Press ↵ to enter menu selection ↓ Menu to select number. ↵ to enter and shift to the next digit to the right
Screen4 PV Selection [62SCRN4]	Display PV enumerations: 0- None 1- PRESSURE 2- % OUT 3- LOOPOUT 4- FLOW	Select Process Variable (PV) to be shown on the display from list.	Press ↵ to enter menu selection ↓Menu to select from list ↵ to enter

Screen4 Pressure Units [63PUNIT]	atm bar ftH2O68F gf/cm2 inH2O39F inH2O60F inH2O68F inHg0C kgf/cm2 kPa mbar mmH2O4C mmH2O68F mmHg0C MPa Pa psi Torr mH2O4C cmH2O4C Custom	Choose appropriate engineering units from list.	Press ↵ to enter menu selection ↓Menu to select from list ↵ to enter
Screen4 Flow Units [64FUNIT]	m3/hr kg/hr MT/hr L/sec L/hr SCFH CFH gal/hr bbl/hr Igal/hr % SCFD gal/min lb/hr lb/min SCFM MSCFH MMSCFH Custom	Choose appropriate engineering units from list.	Press ↵ to enter menu selection ↓Menu to select from list ↵ to enter
Screen4 Flow Custom Unit [65FCUNIT]	□□□□□□□□	When “Custom” selected for Screen4 Flow Units, enter the custom unit name. Character string of flow custom unit text for display x = any Alphanumeric value.	Press ↵ to enter menu selection ↓ to select alphanumeric character. ↵ to enter and shift to the next character to the right

Screen4 Flow Scaling Low [66FSCLLO]	########	Value of the flow custom engineering unit corresponding to the LRV of the transmitter. The limits are: -999999 to 999999	Press ↵ to enter menu selection ↓ Menu to select number. ↵ to enter and shift to the next digit to the right
Screen4 Flow Scaling High [67FSCLHI]	########	Value of the flow custom engineering unit corresponding to the URV of the transmitter. The limits are: -999999 to 999999	Press ↵ to enter menu selection ↓ Menu to select number. ↵ to enter and shift to the next digit to the right
Screen4 Pressure Custom Unit [68PCUNIT]	□□□□□□□□	When “Custom” selected for Screen4 Pressure Units, enter the custom unit name. Character string of pressure custom unit text for display x = any Alphanumeric value	Press ↵ to enter menu selection ↓ to select alphanumeric character. ↵ to enter and shift to the next character to the right
Screen4 Pressure Scaling Low [69PSCLLO]	########	When “Custom” selected for Screen4 Pressure Units, enter the Screen4 Pressure Scaling Low value. Value of the pressure custom engineering unit corresponding to the LRV of the transmitter. The limits are: -999999 to 999999	Press ↵ to enter menu selection ↓ Menu to select number. ↵ to enter and shift to the next digit to the right

Screen4 Pressure Scaling High [70PSCLHI]	########	When “Custom” selected for Screen4 Pressure Units, enter the Screen4 Pressure Scaling High value. Value of the pressure custom engineering unit corresponding to the URV of the transmitter. The limits are: -999999 to 999999	Press ↵ to enter menu selection ↓ Menu to select number. ↵ to enter and shift to the next digit to the right
Extended Menu [EXDMNU]	DISABLE ENABLE	Select ‘Enable’ to enter ‘EX MENU’ and ‘Disable‘ to enter ‘SD MENU’.	Press ↵ to enter menu selection ↓Menu to select from list ↵ to enter
[EXIT]	Exit	Exit from Menu.	↓Exit from Menu list ↵ to enter

Field Calibration for Alternate Ranges

Although all ST 700 transmitters are precisely calibrated at the factory, user calibration can be performed at two points (Calibrate High Point and Calibrate Low Point) within the span range of LRV to URV but is typically unnecessary. It is critical that the pressure standard used for calibration at these two points should be certified to at least twice the pressure transmitter’s accuracy. This is to prevent misleading results that can occur when pressure standards are used that are considered accurate but are actually worse than the accuracy of factory calibration.

5.3.2 Standard Display Abbreviations:

Table 20 – ST 700 Basic Transmitter - The Standard Display abbreviations

Abbreviation	Meaning
OOR	Out of Range
PRSPAN	Push reduce span
Wrng Mo	Wrong Mode
Illegal	Illegal Value
Wrt Err	NVM write error
Too Hi	Value/Parameter Too High
Too Lo	Value/Parameter Too Low
LRV Hi	LRV too High
LRV Lo	LRV too Low
LargeSP	Span too large
SmallSP	Span too small
Locked	Device is locked
Multidr	Device in multidrop mode
Wrt Prt	Device in write protect mode
NotSprt	Not supported
Hi LMT	Value is greater than high Limit value
Low LMT	Value is less than low Limit value

5.3.3 Data Entry

Data entry is performed from left to right. Select a character / digit by pressing the ↓ button and then press ↵ to advance to the next character position to the right. Select the crosshatch character ▒ to terminate the entry or if the final character is already a space character, just press **<<** again.

All numeric entries are clamped at the low or high limit if needed. You can determine the low and high limit for a parameter by selecting either the **H** or **L** character while the cursor is positioned over the left-most digit and press ↵ button. The display will show the selected limit.
For numeric entry sign is required to be entered only for negative numbers. For positive number, select space and move ahead.

Table 21 –Two-Button Data Entry

Screen Symbol	Numeric data entry
H	Display the high limit for this parameter. This symbol only appears in the left-most position of the data entry field.
L	Display the low limit for this parameter. This symbol only appears in the left-most position of the data entry field.
<<	Terminate the numeric entry
0 thru 9, Minus, Decimal	These characters are used to enter numeric values. The minus sign only appears in the left-most digit.

5.3.4 Editing a Numeric value

Editing a numeric value is a digit-by-digit process, starting with the left-most digit.

1. Press ↵ to begin the edit process.
2. The standard display will show the current value of the item on the lower line, left justified.
3. Press the ↓ buttons to select the desired digit, and then press ↵ to advance to the next digit to the right.
4. After the last digit has been entered, press ↵ one more time to write the new value to the transmitter.

5.3.5 Selecting a new setting from a list of choices

Use the procedure described below to select a new setting for parameters that present a list of choices (e.g., PV display, Pressure Units, and so forth).

1. Press ↵ to begin the edit process.
    a. The standard display will show the current setting of the item on the lower line.
2. Press the ↓ button to scroll through the list of choices.
3. Press ↵ to make your selection. The new selection will be stored in the transmitter and will be displayed on the lower line.

5.4 Basic and Standard Display Operations

After removing and connecting the standard display please wait up to 15 seconds for the device to detect the presence of a display as all the processing happens in the communication board. The standard display does not have a microcontroller.

Note: If existing communication board is updated with the new firmware that supports Russian display, please make sure to use the new standard display with Russian support to avoid seeing unexpected characters on the display.

5.4.1 Editing a Numeric value

Editing of a numeric value is a digit-by-digit process, starting with the left-most digit.

1. Press ↵ to begin the edit process:
   - The basic and standard display will display the current value of the item on the lower line, left justified.
   - **Basic Display:** Press the ↑ or ↓ buttons to select the relevant digit, and then press ↵ to advance to the next digit to the right.
   - **Standard Display:** Press the ↓ button to select the relevant digit, and then press ↵ (both buttons simultaneously) to advance to the next digit on the right.
2. Basic and standard displays: After the last digit has been entered, press ↵ one more time to write the new value to the transmitter.

5.4.2 Selecting a new setting from a list of choices

Use the procedure described below to select a new setting for parameters that present a list of choices (e.g., PV display, Pressure Units, etc.).

1. Press ↵ to begin the edit process.
   a. The basic display will show the current setting of the item on the lower line, left justified.
2. Press the ↑ or ↓ buttons to scroll through the list of choices.

   Press ↵ to make your selection. The new selection will be stored in the transmitter and will be displayed on the lower line, right justified.

5.5 Three-Button Operation with no Display Installed

When there is no display installed, the buttons can be used to perform a Zero or Span adjustment of the ST 700 standard transmitter. Caution should be taken to ensure these adjustments are only made when the correct input pressures are applied.

5.5.1 Zero Adjustment

This adjustment is the same as performing a Set LRV using the display.

1. Connect a current meter or voltmeter as shown in Figure 16 to monitor the PV output of the transmitter.
2. Using an accurate pressure source, apply pressure equivalent to the transmitter LRV.
3. Press the Down (↓) and Zero (↑) buttons together to set the Zero.
4. Verify that the output is now 4 mA.

5.5.2 Span Adjustment

This adjustment is the same as performing a Set URV using the display.

1. Connect a current meter or voltmeter as shown in Figure 16 to monitor the PV output of the transmitter.
2. Using an accurate pressure source, apply pressure equivalent to the desired Upper Range Value of the transmitter.
3. Press the **Down (↓)** and **Span** (↵) buttons together to set the span.
4. Verify that the PV output is now 20mA.

You can also use the Honeywell Versatilis Configurator to make any adjustments to an ST 700 SmartLine pressure transmitter. Alternately, certain adjustments are possible through an Experion Station or Universal Station, if the ST 700 is digitally integrated with either of these stations.

5.6 Changing the Default Failsafe Direction

Transmitters are shipped with a default failsafe direction of upscale. This means that the transmitter output will set the current output to upscale failsafe (maximum output) upon detection of a critical status. You can change the direction from upscale failsafe to downscale failsafe (minimum output) by moving the top jumper located in the electronics module.

5.6.1 DE and Analog Differences

Failsafe operation is different between DE and analog operation:

- **Analog operation** – Upscale failsafe drives the transmitter output to 21.8mA. Downscale failsafe drives the transmitter output to 3.8mA.
- **DE operation** – Upscale failsafe causes the transmitter to generate a **+ infinity** digital signal. Downscale failsafe causes the transmitter to generate a **– infinity** digital signal.

The transmitter electronics module interprets either signal as *not-a-number* and initiates its own configured failsafe action for the control system.

5.6.2 Procedure to Establish Failsafe Operation

The failsafe direction display accessible via the Configurator shows only the state of the jumper as it correlates to analog transmitter operation. Failsafe action for the DE control system may be configured to operate in a manner different from analog, as indicated by the state of the transmitter jumper.

The integrated circuits in the transmitter PWA are vunerable to damage by stray static discharges when removed from the electronics housing. Minimize the possibility of static discharge damage when handling the PWA as follows:

Do not touch terminals, connectors, component leads, or circuits when handling the PWA.

When removing or installing the PWA, handle it by its edges or bracket section only. If you need to touch the PWA circuits, be sure you are grounded by staying in contact with a grounded surface or by wearing a grounded wrist strap.

When the PWA is removed from the transmitter, put it in an electrically conductive bag, or wrap it in aluminum foil to protect it.

The following procedure outlines the steps for positioning the write protect and failsafe jumpers on the electronics module. See Figure 19 for the locations of the failsafe and write protect jumpers.

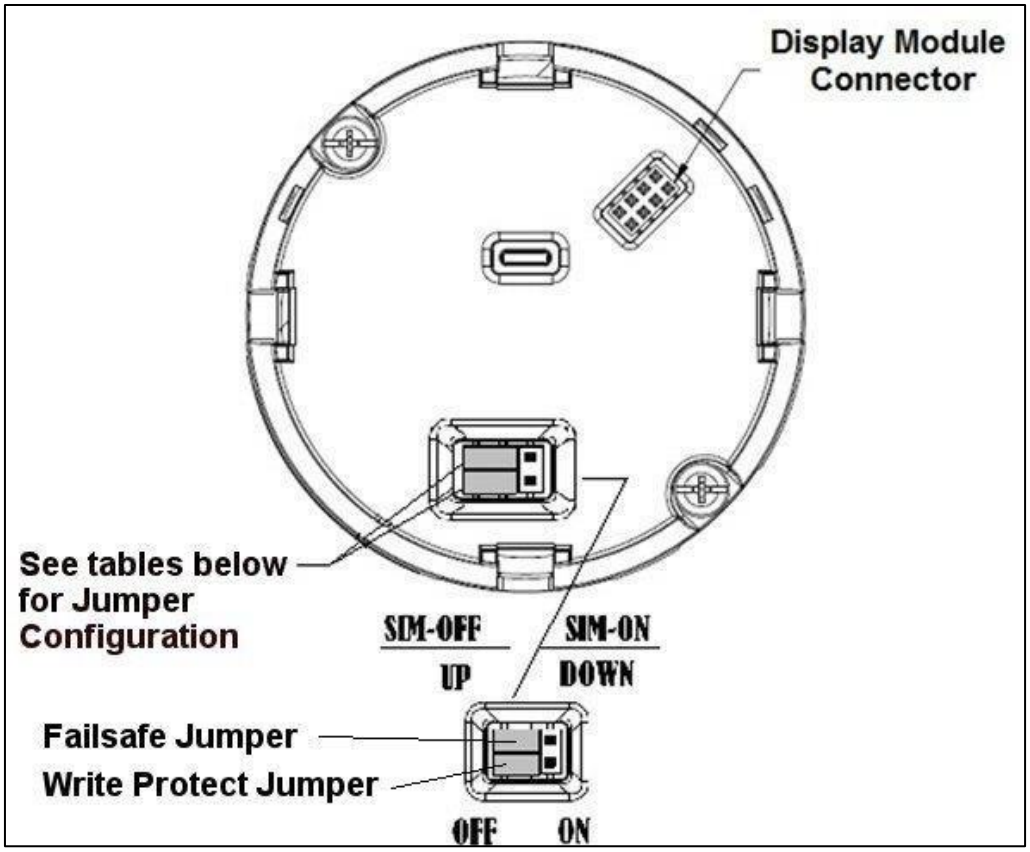

Figure 19 – ST 700 Standard Transmitter - Locating the Failsafe and Write Protect Jumpers

Table 22 – ST 700 Standard Transmitter - HART and DE Failsafe and Write Protect Jumpers

Jumper Arrangements	Description
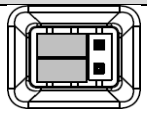	Failsafe = UP (High) Write Protect = OFF (Not Protected)
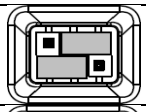	Failsafe = DOWN (Low) Write Protect = OFF (Not Protected)
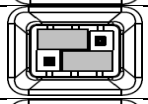	Failsafe = UP (High) Write Protect = ON (Protected)
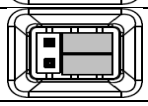	Failsafe = Down (Low) Write Protect = On (Protected)

Table 23 – ST 700 Standard Transmitter - Fieldbus Simulation and Write Protect Jumpers

Jumper Arrangements	Description
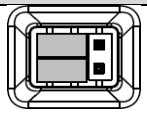	Fieldbus Simulation Mode = OFF Write Protect = OFF (Not Protected)
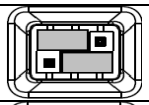	Fieldbus Simulation Mode = OFF Write Protect = ON (Protected)
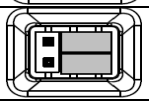	Fieldbus SIM Mode = ON Write Protect = OFF (Not Protected)

1. Turn OFF transmitter power (Power removal is only required in accordance with area safety approvals. Power removal is only required in Class 1 Div 1 Explosionproof and Class 1 Div 2 environments).

2. Loosen the end cap lock and unscrew the end cap from the electronics side of the transmitter housing.

3. If equipped with a display module, carefully depress the two tabs on the sides of the display module and pull it off.

4. If necessary, unplug the interface connector from the communication module. Do not discard the connector.

5. Set the Failsafe Jumper (top jumper) to the desired position (UP or DOWN). See Table 22 and Table 23 for jumper positioning.

6. If applicable, re-install the display module as follows:

   - Orient the display as desired.
   - Install the Interface connector in the display module such that it will mate with the socket for the display in the communication module.
   - Carefully line up the display and snap it into place. Verify that the two tabs on the sides of the display latch.

   Note: Installing a display module into a powered transmitter may cause a temporary upset to the loop output value.

   Orient the display for proper viewing through the end cap window. You can rotate the meter mounting orientation in 90° increments.

7. Restore transmitter power if removed.

5.7 Monitoring the Standard Display for the ST 700 Standard Transmitter

This section describes the information shown on the operator screens of the standard display.

5.7.1 Standard Display – ST 700 Standard Transmitter

- The PV value is user configurable. This field has 6 characters. The maximum allowable numeric value is 999999 or -999999.
    - If fractional decimals are configured, the fractional positions will be dropped, as required.
    - If the PV value exceeds the above limits, it is divided by 1000 and "K" is appended to the result, allowing a maximum value with multiplier of 99999K or -99999K.

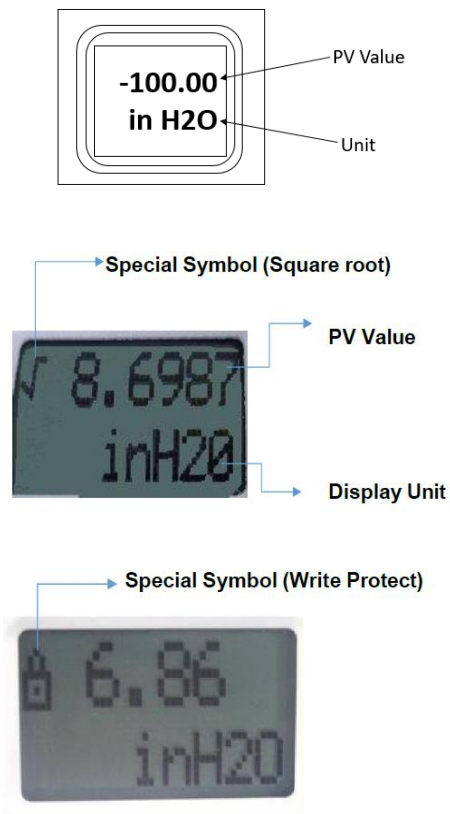

Figure 20 – ST 700 Standard Transmitter - Standard Display with Process Variable Format

6 Maintenance – ST 700 Standard Transmitter

6.1 Overview

This section provides information about preventive maintenance and replacing damaged parts. The topics covered in this section are:

- Preventive maintenance of the meter body barrier diaphragms and process piping to the transmitter.
- Replacement of damaged parts such as the transmitter Printed Wiring Assembly (PWA) and meter body.

6.2 Preventive Maintenance Practices and Schedules

The ST 700 transmitter does not require any specific maintenance at regularly scheduled intervals. However, it is recommended that you perform these typical inspection and maintenance routines on a schedule that is dictated by the characteristics of the process medium and if blow-down facilities or purge systems are being used.

- Check piping for leaks.
- Clear piping of sediment or other foreign matter.
- Clean the transmitter process heads, including the barrier diaphragms.

6.3 Inspecting and Cleaning Barrier Diaphragms

Depending on the characteristics of the process medium, sediment or other foreign particles may collect in the process head cavity/chamber and cause faulty measurement. In addition, the barrier diaphragm(s) in the transmitter meter body may become coated with residue from the process medium. The latter is also true for external diaphragms on flange-mount and remote seal type transmitters.

In many cases, you can readily remove the process head(s) from the transmitter meter body to clean the process head cavity and inspect the barrier diaphragm(s). For flange-mount and remote seal diaphragms, you may only need to run a purge line in the tank to rinse off the face of the diaphragm(s).

The following procedure comprises the general steps for inspecting and cleaning barrier diaphragms. You may have to modify these steps to meet your particular process or transmitter model requirements. Figure 22 shows an exploded view of a Differential Pressure (DP) transmitter meter body for reference. For disassembly/reassembly purposes, Gauge Pressure (GP) and Absolute Pressure (AP) transmitters are similar.

It is recommended that you remove the transmitter from service and move it to a clean area before disassembling it.

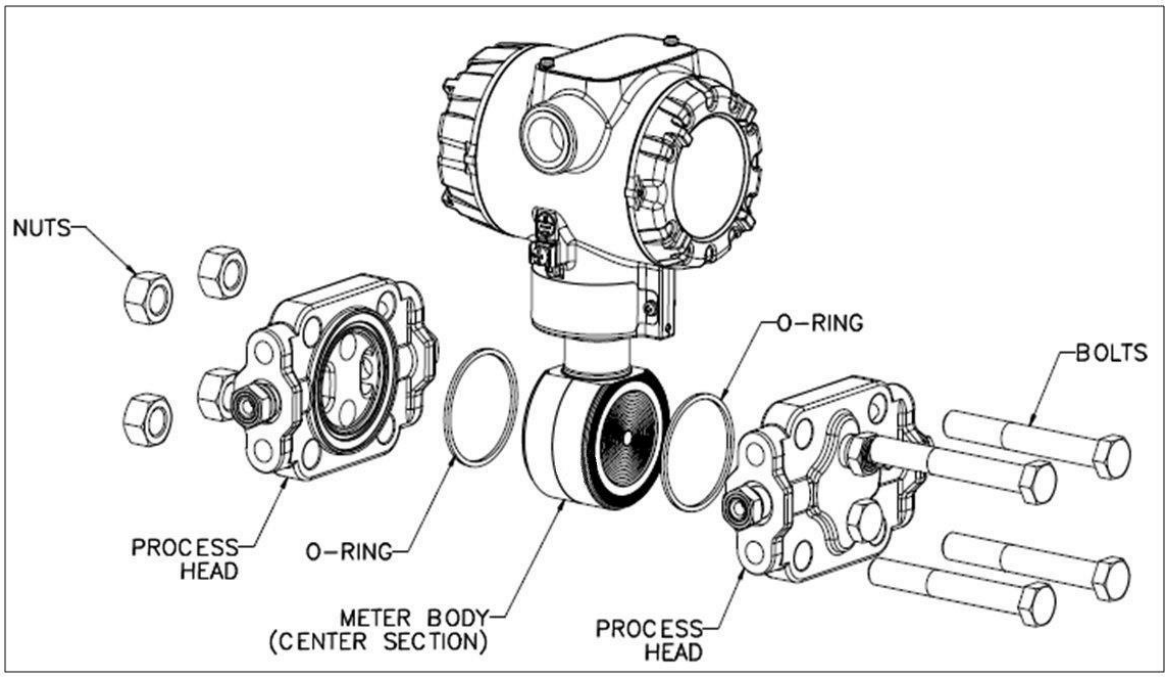

Figure 21 – ST 700 Standard Transmitter - DP Transmitter Head Disassembly

1. Close all valves to isolate the transmitter from the process.
2. Open the vent in the process head to drain fluid from the transmitter meter body, as necessary.
3. Remove the transmitter from the process.
4. Loosen the nuts in the sequence shown in Figure 23.
5. Remove the nuts from the bolts that hold the process head(s) to the meter body.
6. Remove the process heads and bolts.
7. Remove the gasket/ O-ring and clean the interior of the process head using a soft bristle brush and an approved solvent.
8. Inspect the barrier diaphragm for signs of deterioration, corrosion, and distortion.
9. If the diaphragm is distorted contact Honeywell for assistance.
10. Install a new gasket/O-ring in each process head.
11. Coat threads on the process head bolts with a suitable anti-seize compound, such as “Never Seez” or equivalent.
12. Using a torque wrench, gradually tighten the nuts in the sequence shown in Figure 23. Tighten head bolts in stages of 1/3-full torque, 2/3-full torque, and full torque. Refer to the values in Table 24 for torque requirements versus transmitter type and model.

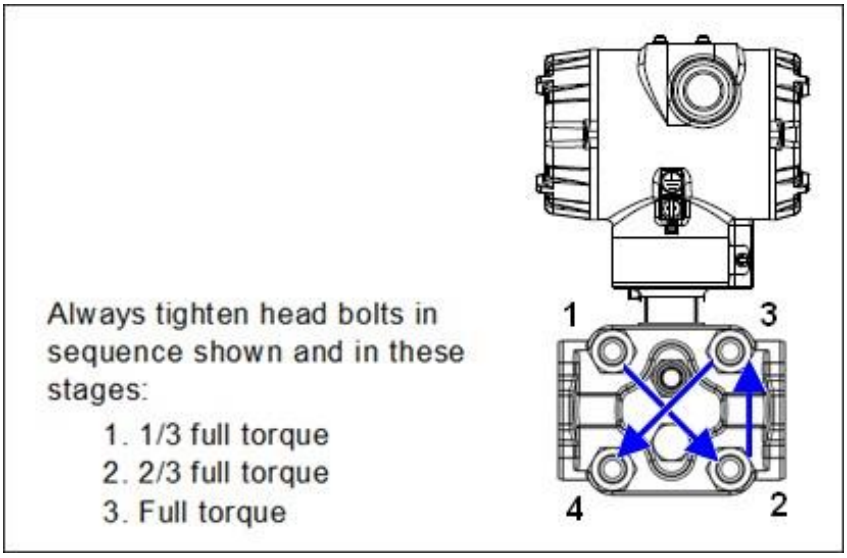

Figure 22 – ST 700 Standard Transmitter - Head Bolt Tightening Sequence

Table 24 – Head Bolt Torque Values

BOLTING TYPE	B7M BOLTING TABLE III B7 OPTION BOLT 51452557-004 NUT 51452559-003	PTFE COATED B7M BOLTING Y SPECIAL OPTION BOLT 51452557-007 NUT 51452559-007	MONEL K 500 BOLTING Y SPECIAL OPTION BOLT 51452557-005 NUT 51452559-005	25% CHROMIUM SUPER DUPLEX BOLTING Y SPECIAL OPTION BOLT 51452557-006 NUT 51452559-006	316 STAINLESS STEEL BOLTING TABLE III SS OPTION BOLT 51452557-003 NUT 51452557-003 BOLT 51452559-004	NACE CR BOLTING TABLE III CR OPTION BOLT 51452557-002 NUT 51452559-02	ALL GRADE 660 CLASS D BOLTING Y SPECIAL OPTION BOLT 51452557-001 NUT 51452559-008	CARBON STEEL BOLTING STANDARD OPTION BOLT 51452557-001 NUT 51452559-001	ALL GRADE 660 CLASS D BOLTING Y SPECIAL 6 KPSI OPTION BOLT 51452557-202 NUT 51452559-008
50049713XXXX, EXCEPT XXX5 ALL TRANSMITTERS EXCEPT DRAFT RANGE	48,8 N•M +/- 2,4 N•M (36.0 Lb-Ft +/- 1.8 Lb-Ft)				56,9 N•M +/- 2,8 N•M (42.0 Lb-Ft +/- 2.1 Lb-Ft)			67,8 N•M +/- 3,4 N•M (50.0 Lb-Ft +/- 2.5 Lb-Ft)	
50049713XXX5 DRAFT RANGE TRANSMITTER ONLY	20,3 N•M +/- 1,0 N•M (15.0 Lb-Ft +/- 0.8 Lb-Ft)								

Replacing the Communication Module

The communication module includes a connector to the sensor ribbon cable and a connector to the optional display module. This section includes the procedure to replace the communication module.

The transmitter does not have to be removed from service to replace the comm module.

Please take appropriate steps to avoid ESD damage when handling the communication and display module assemblies.

Refer to Figure 24 for parts locations.

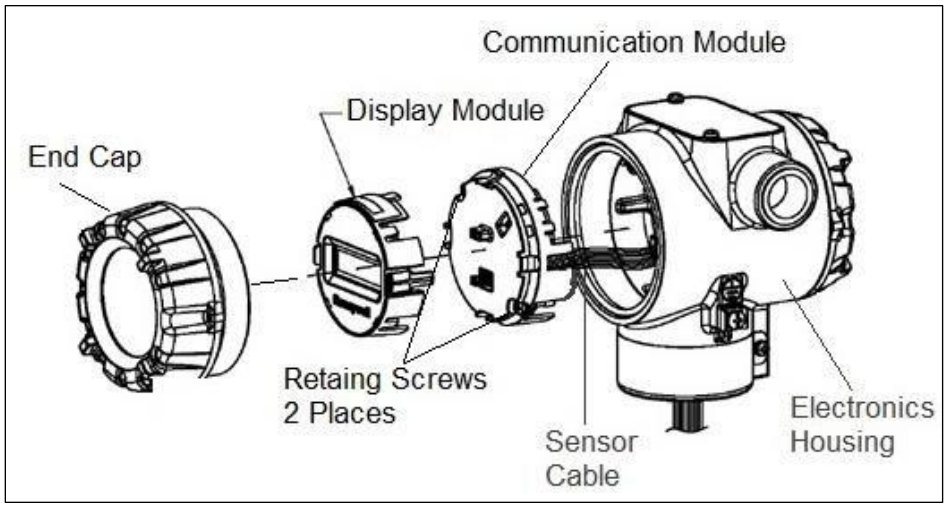

Figure 23 – ST 700 Standard Transmitter - PWA Replacement

1. Turn OFF transmitter power (Power removal is only required in accordance with area safety approvals. Power removal is only required in Class 1 Div 1 Explosion-proof and Class 1 Div 2 environments).
    - When removing the communications module with power applied, the loop will go to 0V. Likewise, installing a communications module into a transmitter with power applied will cause the loop output value to go to 12ma for several seconds then the loop output value will go to the configured value based on the PV input.
    - Installing a display module into a powered transmitter may cause a temporary upset to the loop output value.

2. Loosen the end cap lock and unscrew the end cap from the electronics side of the transmitter housing.

3. If equipped with a display module, carefully depress the two tabs on the sides of the display module and pull it off.

4. If necessary, unplug the interface connector from the communication module. **Do not discard the connector**.

5. Loosen the two retaining screws, and carefully pull the communication module from the Electronics compartment.

6. Carefully align and connect the Sensor Ribbon Cable to the connector "J4" at the bottom of the communication module. When installing the communication module in the next step, be careful not to pinch the Sensor Ribbon Cable.

7. Carefully, insert the communication module into the Electronics compartment. Ensure that the Sensor Ribbon Cable is not pinched.

8. Tighten the two communication module retaining screws.

9. Refer to the SmartLine User's Manual to change the FAILSAFE, READ/WRITE, and SIM-OFF/SIM-ON (Fieldbus Only) configuration settings.

10. If applicable, re-install the display module as follows:
    a. Orient the display as desired.
    b. Install the Interface connector in the display module such that it will mate with the socket for the display in the communication module.
    c. Carefully line up the display and snap it into place. Verify that the two tabs on the sides of the display latch.

Orient the display for proper viewing through the end cap window. You can rotate the meter mounting orientation in 90 ^{o} increments.

11. Apply Parker Super O-ring Lubricant or equivalent to the end cap O-ring before installing the end cap. Reinstall the End Cap and tighten the End Cap locking screw.

12. Installing Optional External Configuration Button Assembly.

    a. Loosen (Do Not Remove) both top nameplate screws and pivot nameplate 90°.
    b. Align the protrusion on the button assembly with the matching opening in the housing and snap the button assembly into the housing.
    c. Rotate the nameplate back to the original position and tighten the nameplate screws.

(Steps 13 - 16 required for Field Upgrades Only)

13. Loosen the End Cap locking screw and unscrew the End Cap from the Field Wiring side of the transmitter housing.

14. Select the proper communication/External Configuration upgrade kit label from the label strip provided and adhere to the inside of the Field Wiring compartment End Cap.

15. Apply Parker Super O-ring Lubricant or equivalent to the end cap O-ring before installing the end cap. Reinstall the End Cap and tighten the end cap locking screw.

16. Install external upgrade label (e.g. DEVICE MODIFIED…..) provided on outside of housing as shown in Figure 24.
17. Restore power if removed.

18. Check the settings of the transmitter Setup and display Setup parameters to make sure that the transmitter is configured correctly for your application. See the HART/DE User's Manual (ST 800 #34-ST-25-38, ST 700 #34-ST-25-44) for details on HART and DE transmitters. Refer to manual #34-ST-25-39 for additional information about Fieldbus transmitters.

19. If applicable, verify External Button Configuration operation. The transmitter is now available for use.

6.4 Replacing the Meter Body

You can replace the complete meter body, including the process heads, or the meter body only on certain Differential Pressure (DP), Gauge Pressure (GP), and Atmospheric Pressure (AP) transmitters by using the existing process head(s). Use the following procedure for meter body-only replacement.

1. Save or record device configuration data.

2. Turn off transmitter power.
3. Remove the transmitter from service and move it to a clean area before disassembling it.
4. Refer to Figure 25. Loosen the End Cap Lock and unscrew the End Cap from the electronics side of the transmitter housing.

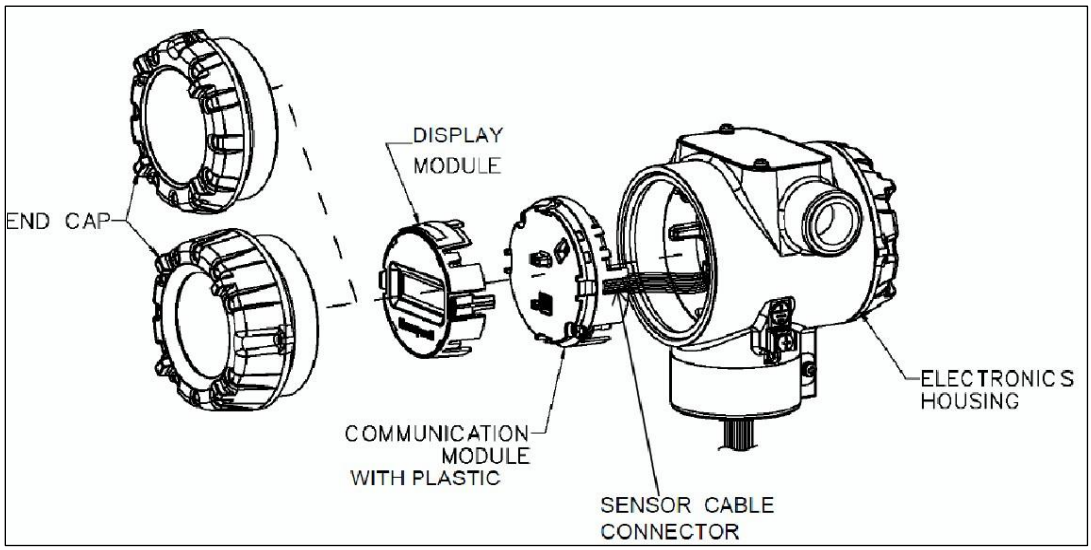

Figure 24 – ST 700 Standard Transmitter - Disassembly for Meter Body Replacement

Please take appropriate steps to avoid ESD damage when handling the communication and display module assemblies.

5. If a display is present, press the two snaps along the side, and remove it from the communication module assembly.
   Note: Do not discard or misplace the display/communication connector, it will be required to reassemble the display module.
6. Loosen the two retaining screws, and remove the communications module assembly, and remove the communication module assembly from the electronics housing.
7. Disconnect the Sensor Cable from the communications Board.
8. Refer to Figure 26. Use a 2mm hex wrench to completely loosen the set screw on the outside of the housing to permit rotating the meter body.

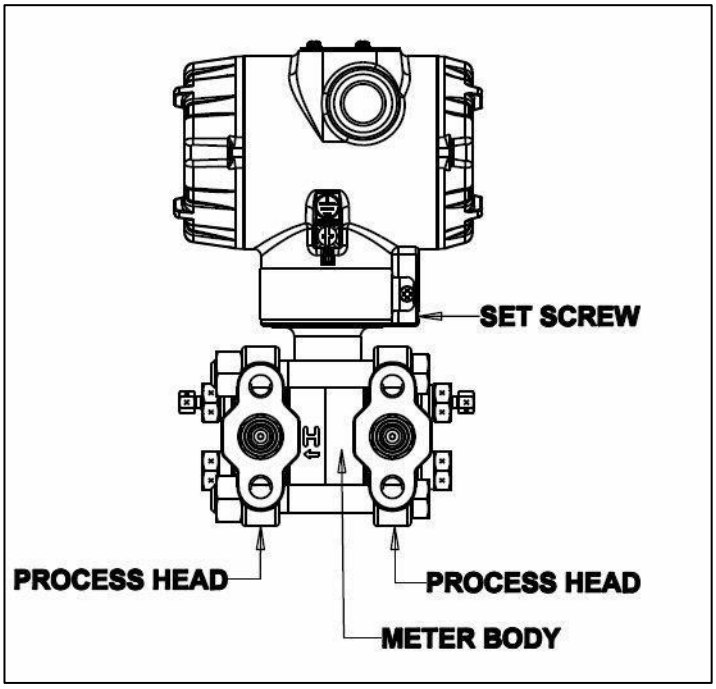

Figure 25 – ST 700 Standard Transmitter - Hardware Location to Remove the Meter Assembly

9. Carefully turn the complete meter body counterclockwise to unscrew it from the electronics housing.
10. Remove the nuts from bolts that hold the process head(s) to the meter body.
11. Remove process heads and bolts.
12. Remove the gaskets or O-rings from the process heads.
13. Clean the interior of the process head(s) with a soft bristle brush and suitable solvent.

CAUTION: To prevent damage to the diaphragm in the meter body, use extreme care when handling or placing the meter body on any surface. Carefully assemble gaskets or O-rings to the meter body. If installing O-rings, lubricate with water or leave dry.

14. Coat threads on process head bolts with anti-seize compound such as “Never Seez” or equivalent.
15. Refer to Figure 27. Apply Dow Corning #33 silicone grease to the meter body adapter O-ring and carefully assemble the O-ring to the meter body. Assemble the process head(s) and bolts to the new meter body. For now, make the bolts only finger tight.

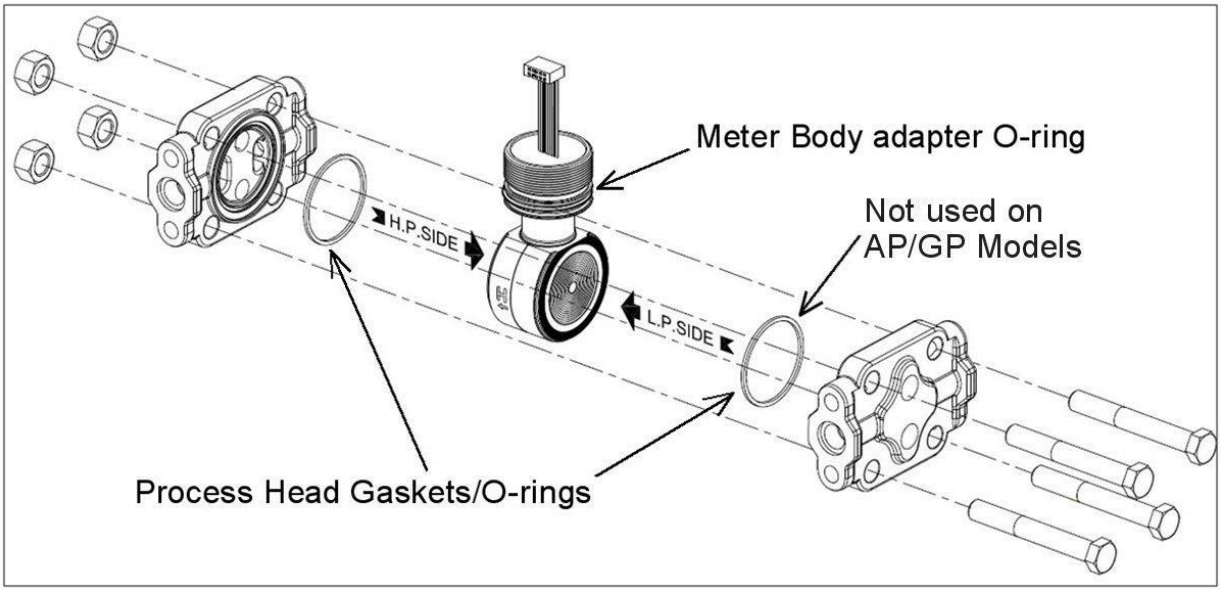

Figure 26 – ST 700 Standard Transmitter - Meter Body Reassembly

16. Use a torque wrench to gradually tighten nuts to torque rating in sequence shown in Figure 28. Tighten head bolts in stages of 1/3 full torque, 2/3 full torque, and then full torque.

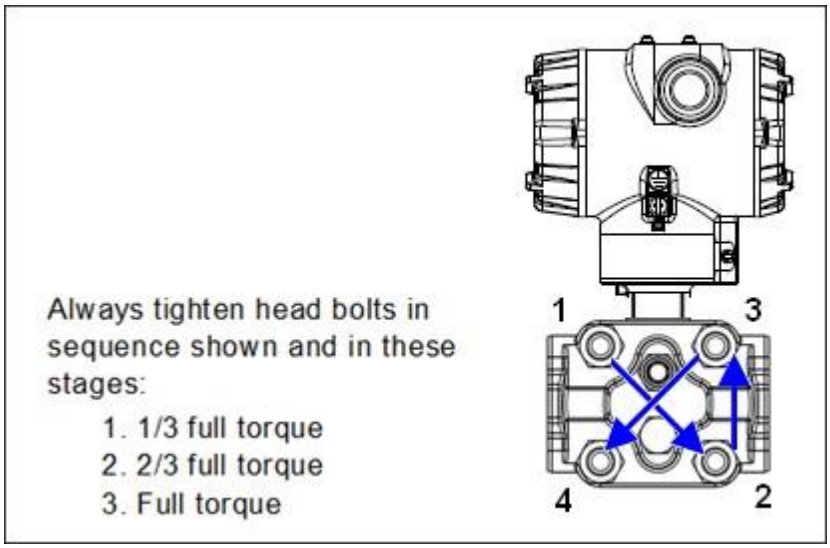

Figure 27 – ST 700 Standard Transmitter - Head Bolt Tightening Sequence

17. Feed the ribbon cable on the new meter body through the neck of the housing.

CAUTION: To prevent damage to the ribbon cable, use care when assembling the meter body to the electronics housing.

18. Screw the new meter body into the housing until the bottom of the meter body adapter is flush with the neck of the electronics housing.
19. Tighten the outside set screw to be sure it is fully seated in the slot in the header.
20. Loosen the set screw ½- turn.

21. Rotate the housing to the desired position (Max. 180º in either direction), and tighten the set screw.
22. Carefully align and connect the Sensor Ribbon Cable to connector "J4" at the bottom of the communication module board. When installing the communication module in the next step, be careful not to pinch the Sensor Ribbon Cable.
23. Carefully, insert the communication module into the Electronics compartment. Ensure that the Sensor Ribbon Cable is not pinched.
24. Tighten the two communication module retaining screws.
25. If applicable, re-install the display module as follows:
    a. Orient the display as desired.
    b. Install the Interface connector in the display module such that it will mate with the socket for the display in the communication module.
    c. Carefully line up the display, and snap it into place. Verify that the two tabs on the sides of the display latch.

Orient the display for proper viewing through the end cap window.
You can rotate the meter mounting orientation in 90 o increments.

26. Connect the bracket to the transmitter housing.
27. Recalibrate the transmitter per section 7 Calibration, of this document.
28. Return the transmitter to service and turn ON power.
29. Verify the transmitter configuration data. Update the configuration if necessary.
30. Lubricate the end-cap O-ring with Parker Super O-ring silicone lubricant or equivalent before replacing the end caps.

7 Calibration for the ST 700 Standard Transmitter

7.1 Recommendations for Transmitter Calibration

The ST 700 standard transmitter does not require periodic calibration to maintain accuracy. Typically, calibration of a process-connected transmitter will degrade, rather than augment the capability of a smart transmitter. For this reason, it is recommended that a transmitter be removed from service before calibration. Moreover, calibration will be accomplished in a controlled, laboratory-type environment, using certified precision equipment.

7.2 Calibration Procedures

For a transmitter operating in analog mode, you must calibrate its output signal measurement range using any compatible hand-held communicator or a local display.

Calibration information and procedures for a transmitter operating in the HART/DE mode are provided in the *ST 700 Series HART/DE Option User's Manual*, Document # 34-25-25-47.

8 Troubleshooting on the ST 700 Standard Transmitter

8.1 Overview

Troubleshooting involves responding to error messages, primarily displayed by the Honeywell Versatilis Configurator. Error messages that may occur on the transmitter's local display are fairly self-explanatory and intuitive. However, this section covers the diagnostic messages that indicate critical conditions. Other than the critical conditions, additional detail is not provided. If you require assistance, contact your distributor or Honeywell Technical Support. All other messages are covered by the Honeywell Versatilis Configurator User Manual.

8.2 Critical Diagnostics Screens

The basic display will display the message CRITCAL FAULT on the top line of the LCD and the appropriate diagnostic text on the lower line.
A description of the diagnostic conditions is given in Table 25 and Table 26 along with suggested actions for resolving the problem.

8.2.1 Fault Conditions and Recommended Corrective Actions – Basic Display

Table 25 – ST 700 Standard Transmitter - Fault Conditions and Recommended Corrective Actions for basic Display

Condition	Analysis	Recommended Corrective Action
Fault. A critical failure has been detected in the Meter body	Use a HART, DE, or FF communicator to read the detailed status information from the transmitter. Refer to the appropriate communicator manual to get more information about the possible causes of the failure.	Cycle power to the transmitter. If the problem continues to occur, replace the Meter body.
Electronics module Fault. A critical failure has been detected on the HART, DE, or FF Electronics module.	Use a HART, DE, or FF communicator to read the detailed status information from the transmitter. Refer to the appropriate communicator manual for more information about the possible failure causes.	Cycle power to the transmitter. If the problem continues to occur replace the Electronics module.
Meter body comm fault. Communications between the meter body and the electronics module has failed.	This could be the result of a failure on either of these modules or the cable that connects them. Use a HART, DE, or FF communicator to read the detailed status information from the transmitter. Refer to the appropriate communicator manual to get more information about the possible causes of the failure.	Check the ribbon cable that connects the meter body to the electronics module. Make sure that the cable is securely plugged into the electronics module. Make sure that all pins are plugged into the connector (e.g., make sure that the connector is not offset in a way that leaves some pins unconnected). Cycle power to the transmitter. If the problem continues to occur replace the electronics module. If this does not fix the problem, replace the Meter body.

8.2.2 Fault Conditions and Recommended Corrective Actions – Standard Display

The standard display will display the message FAULT on the top line of the LCD and the appropriate diagnostic text on the lower line.

Table 26 – ST 700 Standard Transmitter - Fault Conditions and Recommended Corrective Actions

Condtion	Analysis	Recommended Corrective Action
Mbd Com (Meter body Comm fault)	Communications between the meter body and the electronics module has failed.	Check the ribbon cable that connects the meter body to the electronics module. Ensure that the cable is securely plugged into the electronics module. Ensure that all pins are plugged into the connector (e.g. ensure that the connector is not offset in a way that leaves some pins unconnected). Cycle power to the transmitter. If the problem continues to occur replace the electronics module. If this does not fix the problem, replace the meter body.
Comm El (Communication Board fault)	A critical failure has been detected on the HART electronics module.	Cycle power to the transmitter. If the problem continues to occur replace the electronics module.
Mtrbody (Sensor Board Fault)	A critical failure has been detected in the meter body	Cycle power to the transmitter. If the problem continues to occur replace the electronics module.

9 Parts List – ST 700 Standard Transmitter

9.1 Overview

Individually saleable parts for the various transmitter models are listed in this section. Some parts are illustrated for identification. Parts are identified and listed in the corresponding tables as follows:

- Individually saleable parts are indicated in each figure by key number callout.
- Parts that are supplied in kits are indicated in each illustration by key number callout with the letter K prefix.

Table 27 is a list of recommended spare parts.

Table 27 – ST 700 Standard Transmitter - Summary List of Recommended Spare Parts

Part Number	Description	Figure No.	Key No.	1-10 Units	10-100 Units	100-1000 Units
Electronics Housing Assembly						
50049849-501 50049849-502 50049849-503 50049849-504 50049849-509 50049849-510	HART Electronics Module Without REED Sensor PWA HART Electronics Module With REED Sensor PWA DE Electronics Module Without REED Sensor PWA DE Electronics Module With REED Sensor PWA Fieldbus Electronics Module Without REED Sensor PWA for ST700 Fieldbus Electronics Module With REED Sensor PWA for ST700	Figure 30	5	1	1-2	2-4
	Meter Body Seal kit (includes O-rings)	Figure 33	K1	1	1-2	2-4
51452865-501	Glass Filled PTFE					
51452865-502	VITON					
51452865-503	100% PTFE					
51462865-504	GRAPHITE					
50075472-531 50075472-532 50075472-533 50075472-534	HART/DE Terminal Block Assy Without Lightning Protection HART/DE Terminal Block Assy With Lightning Protection Fieldbus Terminal Block Assy Without Lightning Protection Fieldbus Terminal Block Assy With Lightning Protection	Figure 31	3	1	1-2	2-4

Process Head Gasket Kit		Figure No.	Key No.	1-10 Units	10-100 Units	100-1000 Units
51452868-501	Gasket only, Process Head (12 PTFE packs)	Figure 33	Ka	12	12-24	24-48
51452868-502	Gasket only, Process Head (6 Viton Head O-rings)			6	6-12	12-24
51452868-507	Gasket only, Process Head Graphite Gasket (replacement only for existing graphite gasket)			6	6-12	12-24
Meter Body						
Specify complete model number from nameplate	DP Models GP/AP HEAD Models LGP/LAP Models Flush Mount Models Flange Mount Models	Figure 32		1	1-2	2-4

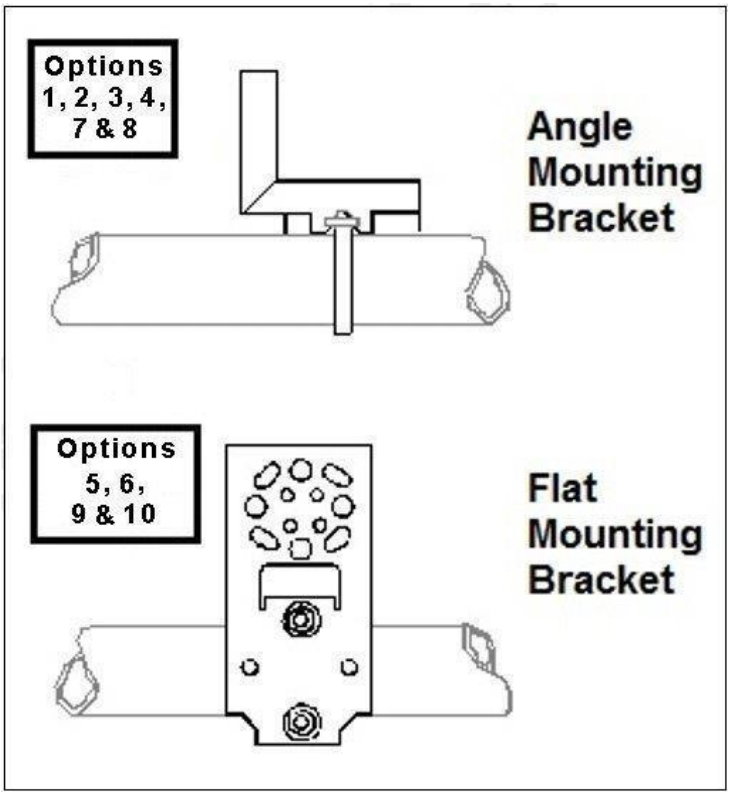

Figure 28 – ST 700 Standard Transmitter - Angle and Flat Bracket Parts

Table 28 – ST 700 Standard Transmitter - Angle and Flat Bracket Parts

(Refer to Figure 29)

Key No.	Part Number	Description	Quantity Per Unit
1	30752770-603	SS 304 Angle Bracket Mounting kit for all models except In-line and flush mount transmitters.	1
2	30752770-604	SS 304 Angle Bracket Mounting kit for all In-Line and flush mount transmitters.	1
3	51196557-505	SS 304 Flat Bracket Mounting kit for all models except In-line and flush mount transmitters.	1
4	51196557-506	SS 304 Flat Bracket Mounting kit for all In-line transmitters and flush mount transmitters.	1
5	30752770-903	SS 316 Angle Bracket Mounting kit for all In-line transmitters except In-Line and flush mount transmitters.	1
6	30752770-904	SS 316 Angle Bracket Mounting kit for all In-Line and flush mount transmitters.	1
7	51196557-508	SS 316 Flat Bracket Mounting kit for all In-line transmitters except In-Line and flush mount transmitters.	1
8	51196557-509	SS 316 Flat Bracket Mounting kit for all In-Line and flush mount transmitters.	1

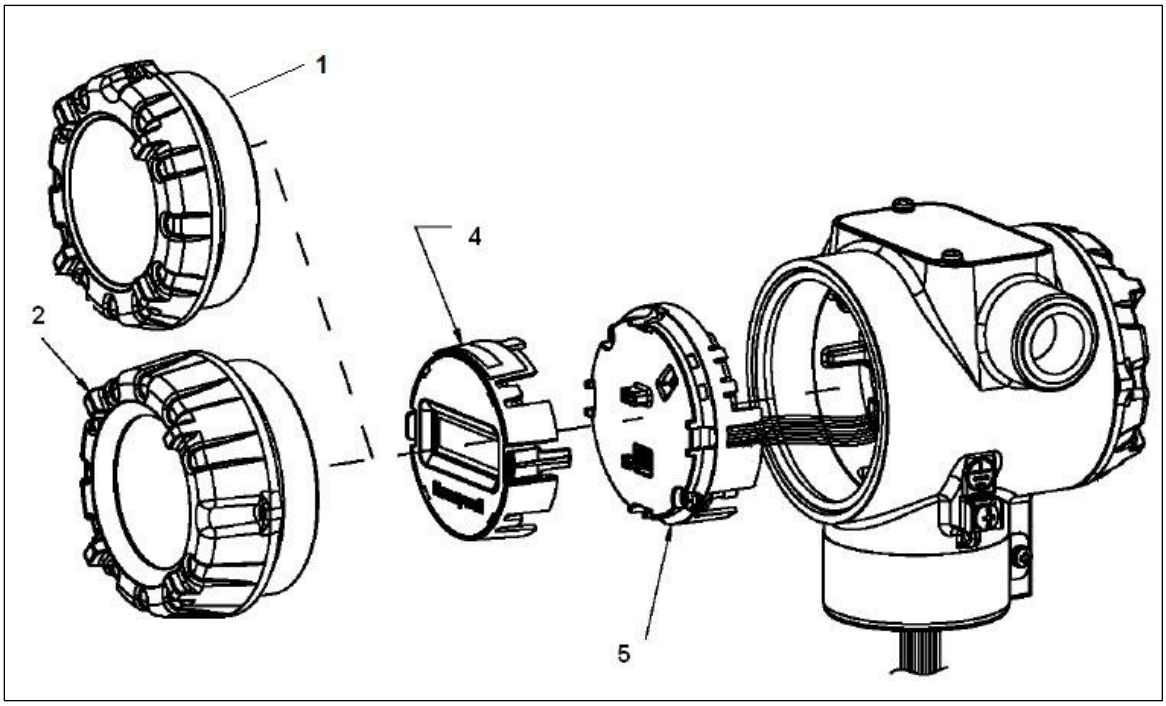

Figure 29 – ST 700 Standard Transmitter - Electronic Housing, Display End

Table 29 – ST 700 Standard Transmitter Major Assemblies

(Refer to Figure 31 and Figure 32)

Key No.	Part Number	Description	Quantity Per Unit
1	50049858-501 50049858-521	End Cap (Aluminum) End Cap (Stainless Steel)	1
2	50049832-501 50049832-521	End Cap, Display (Aluminum) with window End Cap, Display (Stainless Steel) with window	1
3	50075472-531 50075472-532 50075472-533 50075472-534	Terminal Assy HART/DE without Lightning protection Terminal Assy HART/DE with Lightning protection Terminal Assy FF/PB without Lightning protection Terminal Assy FF/PB with Lightning protection	1
4	50049911-501 50126003-501	Basic Display Standard Display	1
5	50049849-501 50049849-502 50049849-503 50049849-504 50049849-509 50049849-510	HART Electronics Module Assembly (PWA) without Reed sensor HART Electronics Module Assembly (PWA) with Reed sensor DE Electronics Module Assembly (PWA) without Reed sensor DE Electronics Module Assembly (PWA) with Reed sensor FF Electronics Module Assembly (PWA) without Reed sensor FF Electronics Module Assembly (PWA) with Reed sensor	1
6	50049915-501 50131077-501	External Zero, Span & Config Buttons (3- button Assembly) External Zero, Span & Config Buttons (2- button Assembly)	1
7	30752770-503	Carbon Steel Angle Bracket Mounting kit for all models except Inline and Flush mount transmitters.	1
8	32300808-501	Carbon Steel Marine Approved Mounting Bracket for all models except In-line and Flush mount transmitters.	1
9	32300808-502	SS 304 Marine Approved Mounting Bracket for all models except In-line and Flush mount transmitters.	1
10	32300808-503	SS 316 Marine Approved Mounting Bracket for all models except In-line and Flush mount transmitters.	1
11	32300808-504	Carbon Steel Marine Approved Mounting Bracket for all In-Line and Flush mount transmitters.	1
12	32300808-505	SS 304 Marine Approved Mounting Bracket for all In-Line and Flush mount transmitters.	1
13	32300808-506	SS 316 Marine Approved Mounting Bracket for all In-Line and Flush mount transmitters.	1
K1	30757503-505	Electronics housing seals kit (includes O-rings).	2

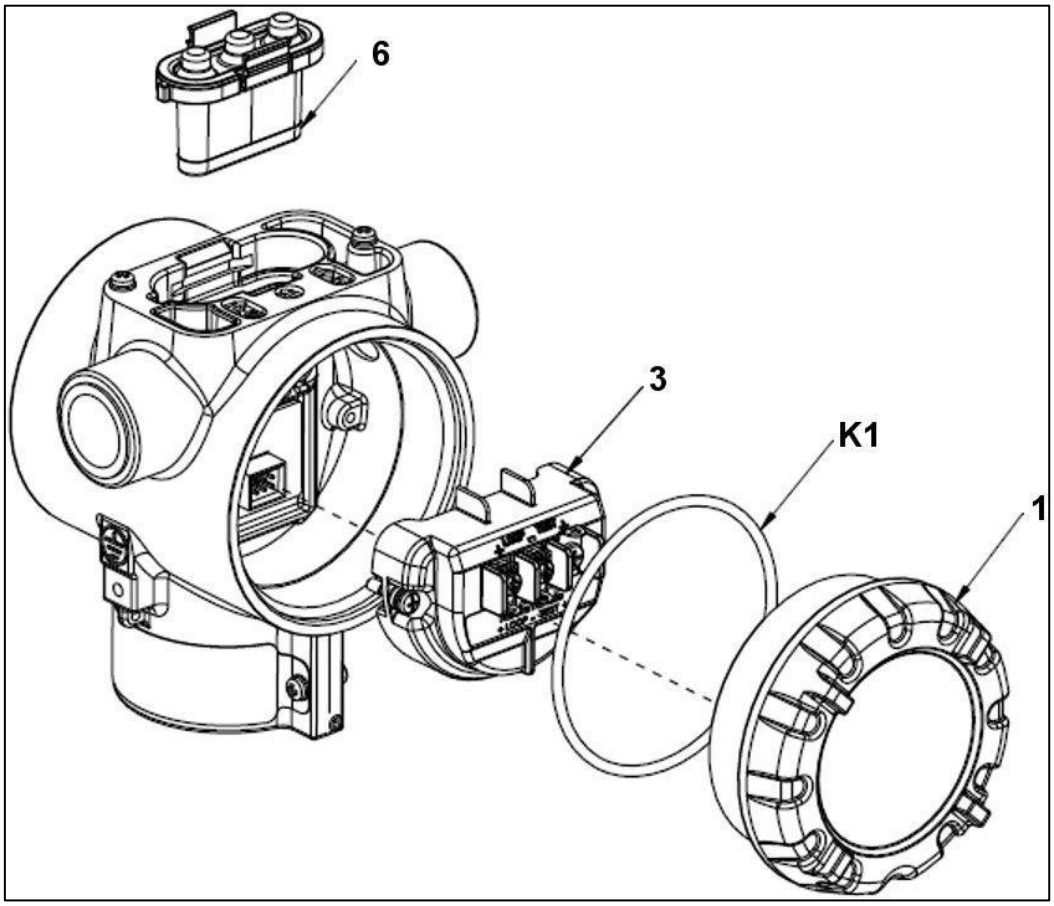

Figure 30 – ST 700 Standard Transmitter - Electronic Housing, Terminal Block End

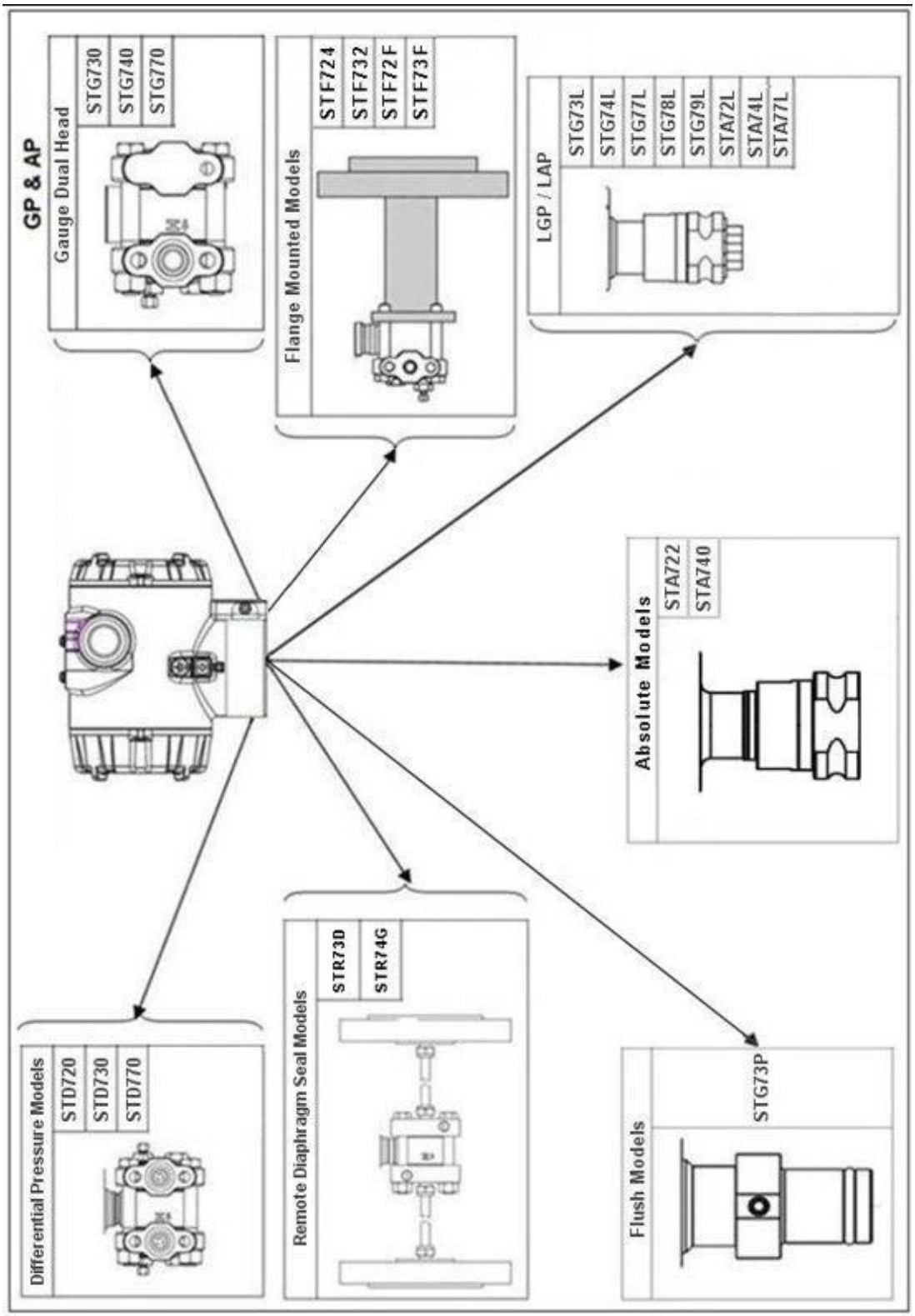

Figure 31 – ST 700 Standard Transmitter - Major Assemblies

Table 30 – ST 700 Standard Transmitter Models STD720, 730 & 770

(Refer to Figure 33)

Key No.	Part Number	Description	Qty/ Kit
		Meter Body Gasket Kits	
	51452865-501 51452865-502 51452865-503 51452865-504	Glass Filled PTFE VITON 100% PTFE GRAPHITE	
		Each Meter Body Gasket Kit includes:	
K6		Gasket, Process Head	6
Ka		Gasket, Flange Adapter	6
K7		O-Ring, Meter Body to Electronics Housing	3
		K7 Process Head Gasket Kits	
K6 K6 K6	51452868-501 51452868-502 51452868-507	Gasket, Process Head (6 Gaskets/ 1 Kit) Gasket, Flange Adapter (6 Gaskets/ 1 Kit) O-Ring, Meter Body to Electronics Housing (3 Gaskets/ 1 Kit)	12 6 6
		Flange Adapter Gasket Kits	
Ka Ka Ka	51452868-504 51452868-505 51452868-508	Gasket only, Flange Adapter, 6 PTFE Adapter Gaskets Gasket only, Flange Adapter, 6 VITON Adapter O-Rings Gasket only, Flange Adapter Graphite Gasket (use only as replacement of existing graphite gasket)	6 6 6
		½-inch NPT Flange Adapter Kits	
	51452867-110 51452867-210 51452867-310 51452867-410 51452867-150 51452867-350 51452867-130 51452867-330	Flange Adapter Kit, with: SS Flange Adapters and with carbon steel bolts SS Flange Adapters and with A286 SS (NACE) bolts SS Flange Adapters and with 316 SS (non-NACE) bolts SS Flange Adapters and with B7M alloy steel bolts Monel Flange Adapters and with carbon steel bolts Monel Flange Adapters and with 316 SS (non-NACE) bolts Hastelloy C Flange Adapters and with carbon steel bolts Hastelloy C Flange Adapters and with 316 SS (non-NACE) bolts	
		Each ½-inch NPT Flange Adapter Kit includes:	
Ka		Gasket, Flange Adapter	2
Kb		½-inch NPT Flange Adapter	2
Kc		Bolt, hex head, 7/16-20 UNF, 1.50 inches long	4

Key No.	Part Number	Description	Qty/ Kit
Bolt And Nut Kit			
	51452866-501	Carbon steel bolt and Nut Kit	
	51452866-502	Stainless Steel Bolt and Nut Kit with NACE Certificate	
	51452866-503	Stainless Steel Bolt and Nut Kit without NACE Certificate	
	51452866-504	B7M Bolt and Nut Kit	
	51452866-505	All Stainless Steel NACE Bolt and Nut Kit	
	51452866-506	Monel Bolt and Nut Kit	
	51452866-507	Super Duplex Bolt and Nut Kit	
	51452866-508	Stainless Steel NACE 6K Bolt and Nut Kit	
Each Bolt and Nut Kit Includes:			
K8		Head Bolt	4
K4		Head Nut	4
Kc		Adapter Bolt	4

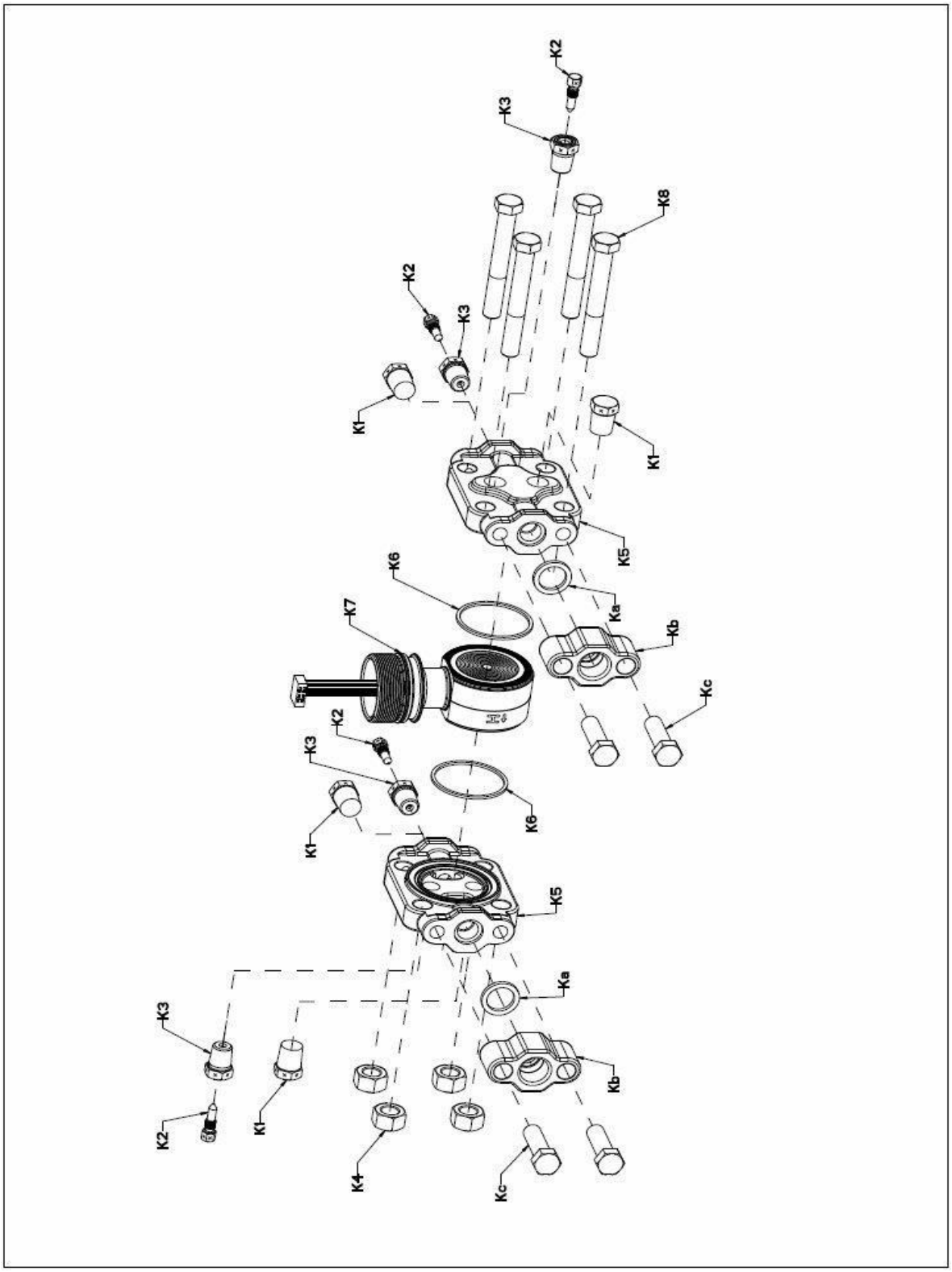

Figure 32 - ST 700 Standard Transmitter - ST 700 Models STD720, 730, 770

(Refer to Table 31)

Table 31 – ST 700 Standard Transmitter - Parts for STG730, 740, 770 and STD720, 730, 770 and STA722, 740 Transmitter Body

(Refer to Figure 34)

Key No.	Part Number	Description	Qty/Unit
Process Head Assembly Kits with PTFE Gaskets			
	51452864-010 51452864-012 51452864-020 51452864-022 51452864-030 51452864-032 51452864-040 51452864-042 51452864-050 51452864-052	Carbon steel head (zinc plated) without side vent/drain Carbon steel head (zinc plated) with side vent/drain Stainless steel head without side vent/drain Stainless steel head with side vent/drain Hastelloy C head without side vent/drain Hastelloy C head with side vent/drain Monel head without side vent/drain Monel head with side vent/drain Carbon steel head (nickel plated) without side vent/drain Carbon steel head (nickel plated) with side vent/drain	
Process Head Assembly Kits with VITON Gaskets			
	51452864-110 51452864-112 51452864-120 51452864-122 51452864-130 51452864-132 51452864-140 51452864-142 51452864-150 51452864-152	Carbon steel head (zinc plated) without side vent/drain Carbon steel head (zinc plated) with side vent/drain Stainless steel head without side vent/drain Stainless steel head with side vent/drain Hastelloy C head without side vent/drain Hastelloy C head with side vent/drain Monel head without side vent/drain Monel head with side vent/drain Carbon steel head (nickel plated) without side vent/drain Carbon steel head (nickel plated) with side vent/drain	
Each process head assembly kit includes:			
K1		Pipe Plug (See notes 1 & 2)	1
K2		Vent Plug (See note 1)	1
K3		Vent Bushing (See note 1.)	1
K5		Process Head	1
K6		Gasket (PTFE), Process Head	1
Ka		Gasket (PTFE), Flange Adapter	1
	Notes		
	Note 1: This item is made of the same material as the process head s, except for Kits with carbon steel process head s, which include stainless steel Pipe Plug, Vent Plug, and Vent Bushing. Note 2: The Kit for process head s without side vent/drain does not include Pipe Plugs (K1).		
Reference Head			

K9	51452951-502	316 SS Blind Reference Head	1

Key No.	Part Number	Description	Qty/Unit
Bolt And Nut Kit			
	51452866-501	Carbon steel bolt and Nut Kit	
	51452866-502	Stainless Steel Bolt and Nut Kit with NACE Certificate	
	51452866-503	Stainless Steel Bolt and Nut Kit without NACE Certificate	
	51452866-504	B7M Bolt and Nut Kit	
	51452866-505	All Stainless Steel NACE Bolt and Nut Kit	
	51452866-506	Monel Bolt and Nut Kit	
	51452866-507	Super Duplex Bolt and Nut Kit	
	51452866-508	Stainless Steel NACE 6K Bolt and Nut Kit	
Each Bolt and Nut Kit Includes:			
K8		Head Bolt	4
K4		Head Nut	4
Kc		Adapter Bolt	4

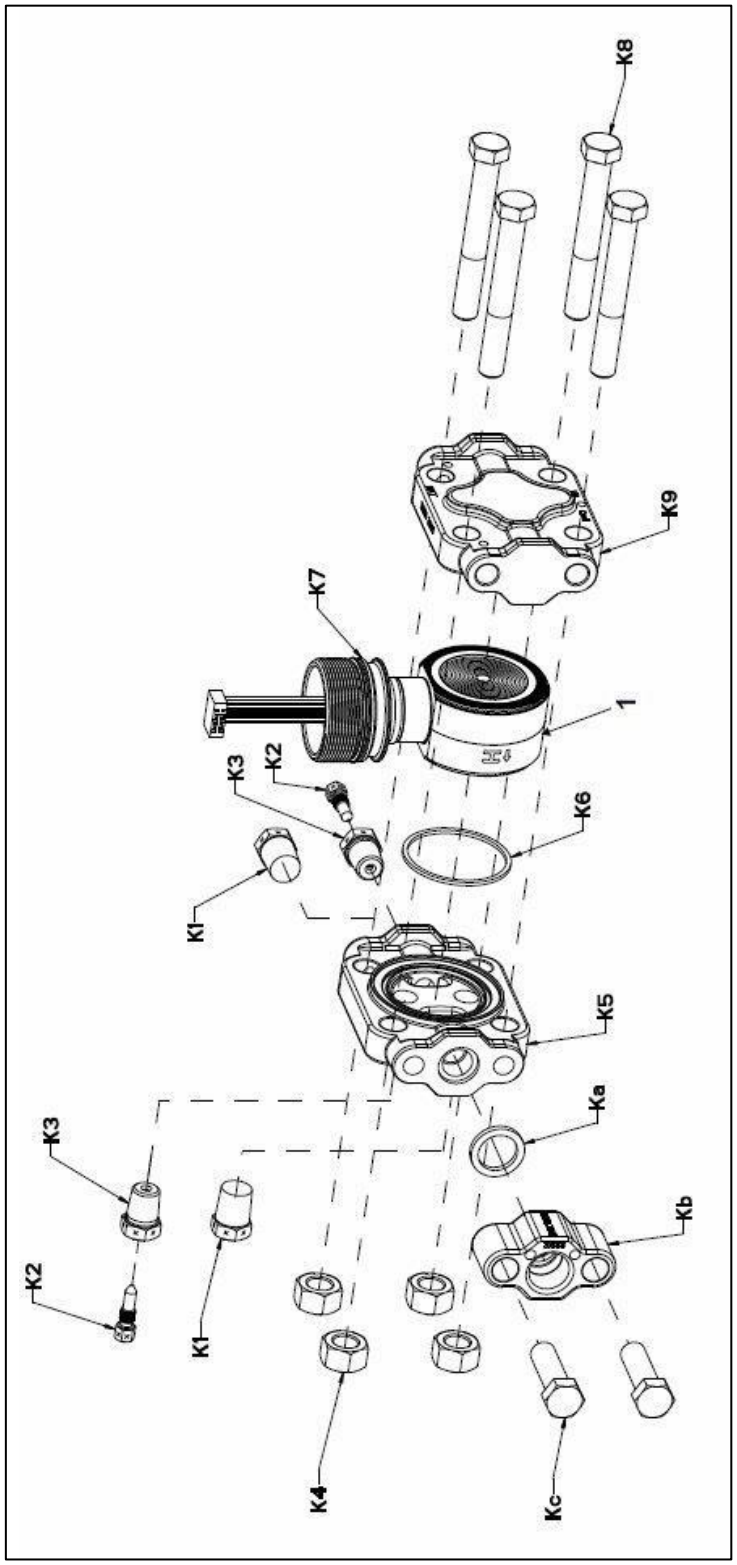

Figure 33 – ST 700 Standard Transmitter - STG730, 740, 770 and STA722,

740 Transmitter Body

Table 32 - ST 700 Standard Transmitter - Inline Gauge and Inline Atmospheric Meter Body Parts

(See Figure 35)

Key No.	Part Number	Description	Qty/Unit
	Specify complete model number from nameplate	ST Series replacement meter body (LAP/LGP model)	1

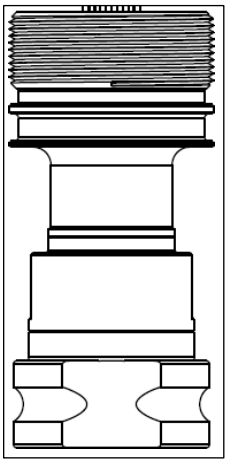

Figure 34 – ST 700 Standard Transmitter - Inline Gauge and Inline Atmospheric Meter Body Bodies

Table 33 – ST 700 Standard Transmitter - Flange-Mounted Meter Body Parts – STF724, 732

(Refer to Figure 36 and Figure 37)

Key No.	Part Number	Description	Qty/Unit
1	Specify complete model number from nameplate	ST Series 700 replacement meter body	1

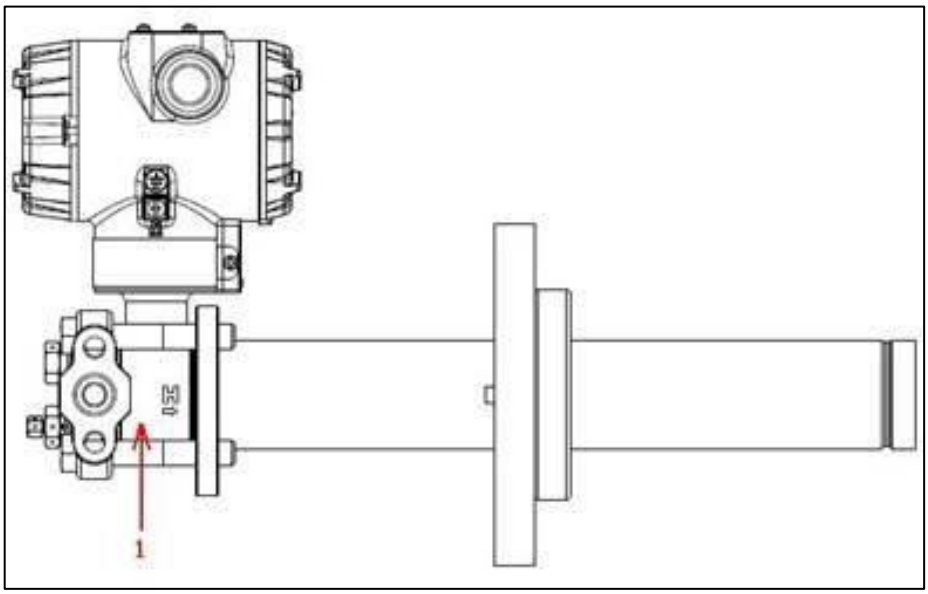

Figure 35 – ST 700 Standard Transmitter - Extended Flange Design

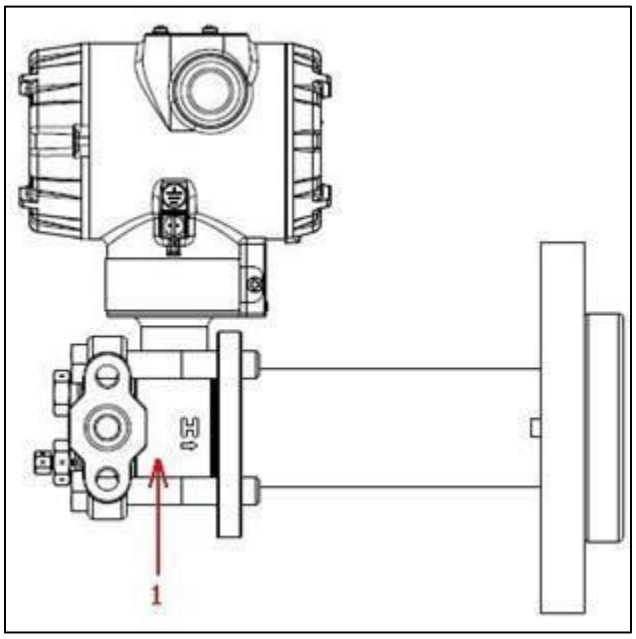

Figure 36 - ST 700 Standard Transmitter - Flush Flange Design

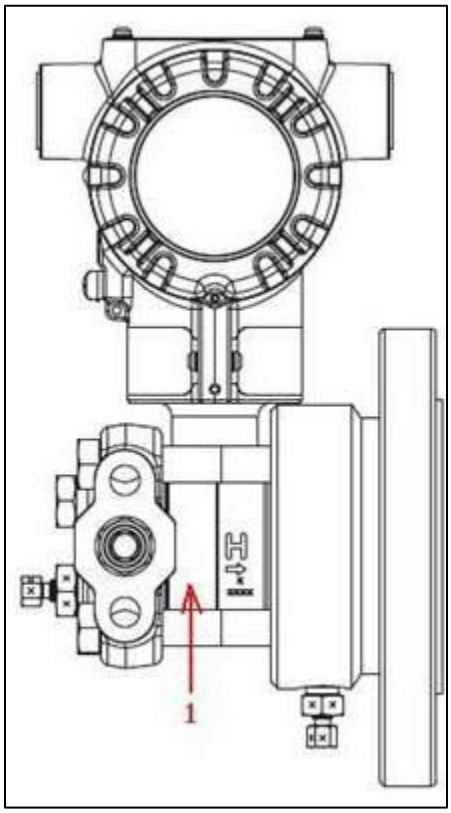

Figure 37 - ST 700 Standard Transmitter - Pseudo Flange Design

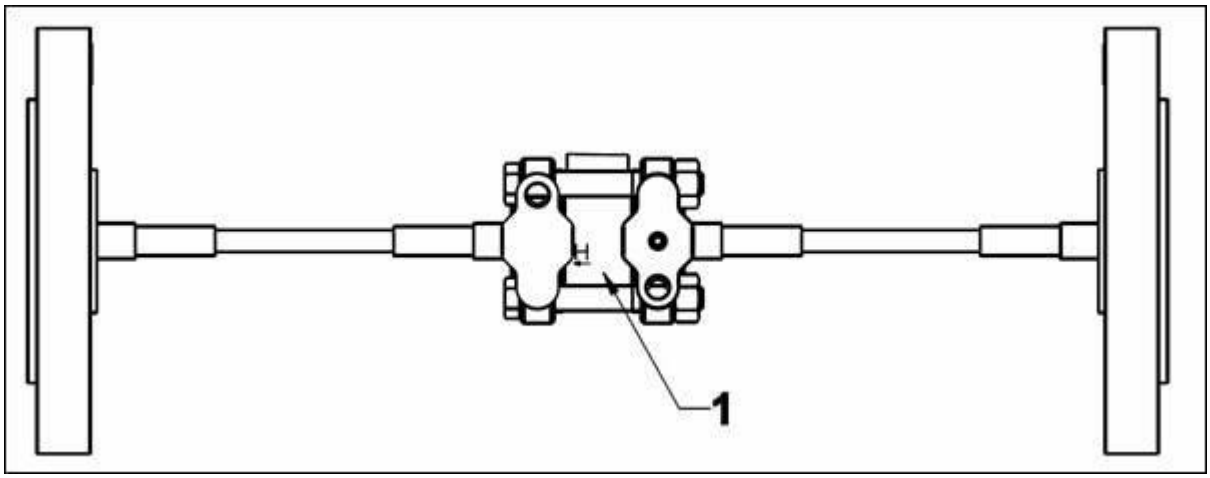

Figure 38 – ST 700 Standard Transmitter - Remote Seal Diaphragm

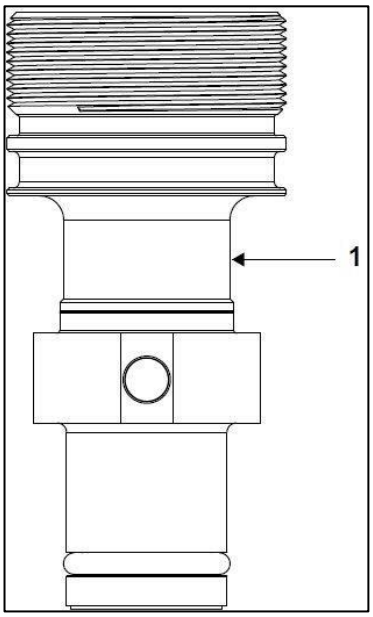

Figure 39 - ST 700 Standard Transmitter - Flush Mount Meter Body.

Table 34 – ST 700 Standard Transmitter - Flush Mount Meter Body Parts

(Refer to Figure 40)

Key No.	Part Number	Description	Qty/Unit
1	Specify complete model number from nameplate	Replacement meter body (flush Mount model)	1
	30756445-508	Gasket Kit (O-rings)	
	51204496-501	316L SS Mounting Sleeve Kit	
	51204497-501	Calibration Sleeve Kit	

Refer to Appendix A for Product Certifications and Approvals for the ST 700 standard and basic transmitter.

10 Introduction – ST 700 Basic Transmitter

10.1 Overview

This section is an introduction to the physical and functional characteristics Honeywell's family of the ST 700 basic SmartLine pressure transmitters.

If you are not sure which type of ST 700 you have, standard or basic, please refer to Section 1 of this manual

If you have a ST 700 standard transmitter, use Sections **2** through **9**.
If you have a ST 700 basic transmitter, use Sections **10** through **17.**

10.2 Features and Options

The ST 700 basic transmitter is available in a variety of models for measuring Differential Pressure (DP), Gauge Pressure (GP), and Absolute Pressure (AP). Table 35 lists the protocols, human interface (HMI), materials, approvals, and mounting bracket options for the ST 700.

Table 35 – ST 700 Basic Transmitter - Features and Options

Feature/Option	Basic/Available Options
Communication Protocols	HART® version 7.
Human-Machine Interface (HMI) Options (Standard Display/External Two buttons)	**Standard Display (HART® only):** • Two-button programming (optional). • Standard display language: English and Russian only. • Two-mode operations: PV display and menu navigation.
Calibration	Single.
Approvals See Appendix AAppendix AAppendix A Appendix Afor details.	FM, CSA, ATEX, IECEx, SAEx, INMETRO, NEPSI, GOST.
Mounting Brackets	Angle/flat carbon steel/304 and 316 stainless steel.
Integration Tools	Experion.

	The 2-button option is available for the standard display. The external 2-buttons option is available in this model.This is used for navigation of standard display or for setting zero, span and zero correct where standard display is not connected.

10.2.1 Physical Characteristics

As shown in Figure 41 the ST 700 basic transmitter is packaged in two major assemblies: the electronics housing and the meter body. The elements in the electronic housing respond to setup commands and execute the software and protocol for the different pressure measurement types. Figure 42 shows the assemblies in the electronics housing with available options.

The meter body provides connection to a process system. Several physical interface configurations are available, as determined by the mounting and mechanical connections, all of which are described in the **Installation** section of this manual.

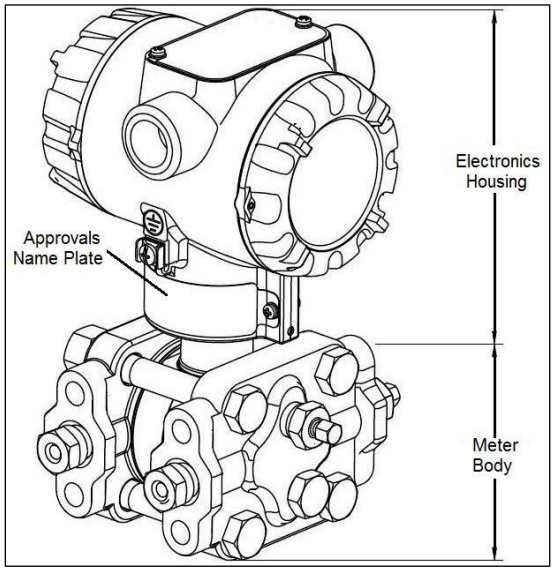

Figure 40 – ST 700 Basic Transmitter - Major Assemblies

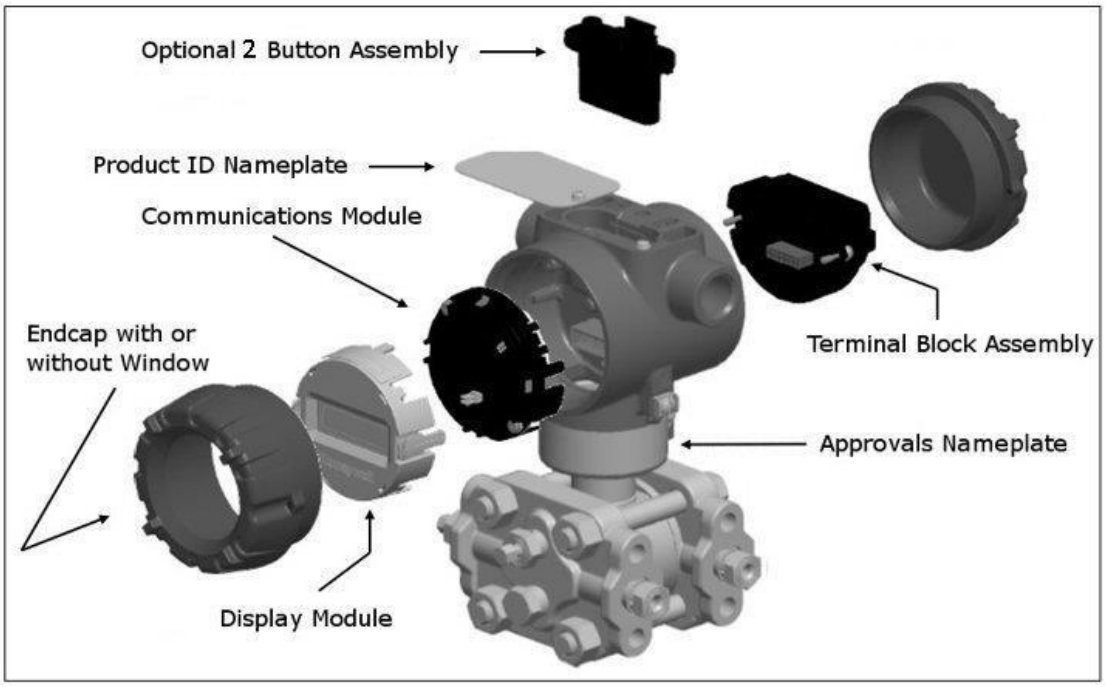

Figure 41 – ST 700 Basic transmitter Electronics Housing Components

10.2.2 Functional Characteristics

The transmitter measures process pressure and provides a proportional analog 4 to 20mA output to the measured process variable (PV). Available output communication protocols include HART®.

The standard display is only available on HART transmitters.

An optional external 2-button assembly is available to set up and make adjustments to the transmitter. In addition, a Honeywell Versatilis Configurator (not supplied with the transmitter) can facilitate setup and adjustment procedures. Certain adjustments can be made through an Experion Station if the transmitter is digitally integrated with Honeywell's Experion.

The standard display menu is implemented as one long single-level menu and will "wrap around" when it reaches the start or end of the menu. The standard display uses an optional 2-button assembly to set up and make adjustments to the transmitter.

10.3 ST 700 Transmitter Nameplate

The transmitter nameplate mounted on the bottom of the electronics housing (see Figure 42) lists its model number, physical configuration, electronics options, accessories, certifications, and manufacturing specialties. Figure 43 is an example of a typical Gauge Pressure (GP) or Atmospheric Pressure (AP) transmitter name plate. The model number format consists of a Key Number with several table selections. The Differential Pressure (DP), Absolute Pressure (AP), and Gauge Pressure (GP) name plates are essentially the same. The DP model provides one additional entry (7 vs. 6) in the meter body selections (Figure 43) to accommodate the static pressure rating.

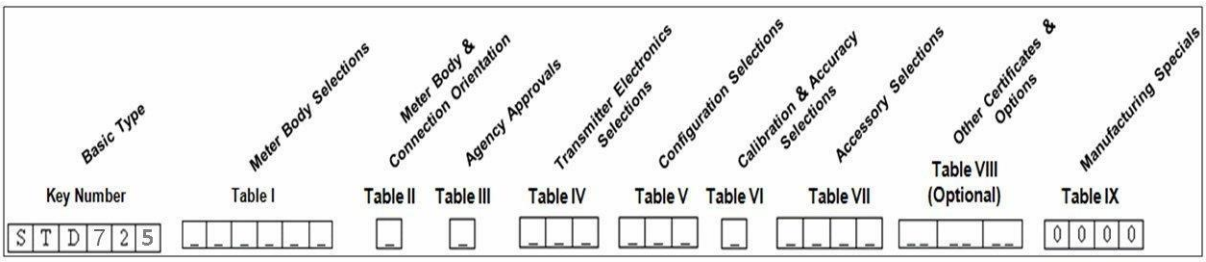

Figure 42 – ST 700 Basic Transmitter - Name Plate

You can readily identify the series and basic transmitter type from the third and fourth digits in the key number. The letter in the third digit represents one of these basic transmitter types:

- A = Absolute Pressure
- D = Differential Pressure
- F = Flange Mounted
- G = Gauge Pressure
- R = Remote Seals

For a complete selection breakdown, refer to the appropriate Specification and Model Selection Guide provided as a separate document.

10.4 Safety Certification Information

An "Approvals" name plate is located on the bottom of the Electronics Assembly; see Figure 42 exact location. The approvals name plate contains information and service marks that disclose the transmitter compliance information.
See Appendix A of this document for safety certification requirements and details.

10.5 Transmitter Adjustments

Zero and Span adjustments are possible in ST 700 basic transmitter with the optional external 2-button and integrated two-button assemblies. See Figure 42 for the external 2-button assembly.

You can also use the Honeywell Versatilis Configurator or other third-party hand-held configurator to make adjustments to the ST 700 basic transmitter. Alternately, certain adjustments can be made through the Experion or Universal Station, if the transmitter is digitally integrated with a Honeywell Experion or TPS system.

10.6 Display Options

Table 36 – ST 700 Transmitter - Available Display Characteristics

Standard Display	• 360º rotation in 90º Increments.
	• 2 lines, 8 characters
	  ○ Standard units of measurement: Pressure Units: atm, bar, ftH_2O68F, gf/cm^2, inH_2O39F, inH_2O60F, inH2O68F, inHg0C, kgf/cm^2, kPa, mbar, mmH_2O4C, m, mH_2O68F, mmHg0C, MPa, Pa, psi, Torr, mH_2O4C, cmH_2O4C.
	  ○ Flow Units (DP models only): m3/hr, Kg/hr, MT/hr, L/sec, L/hr, SCFH, CFH, gal/hr, bbl/hr, Igal/hr, %, SCFD, gal/min, lb/hr, lb/min, SCFM, MSCFH, MMSCFH.
	• Diagnostic messaging.

10.7 Optional Integrated Two-Button Assembly (Standard Display)

The standard display does not support all the transmitter configuration parameters and has limited features. The optional Integrated Two-Button Assembly for the standard display provides the following features and capabilities:

- Menu and enter key functionality.
- With the menu-driven display:
  - Comprehensive on-screen menu for navigation.
  - Transmitter configuration: enter LRV, enter URV and loop test.
  - Transmitter calibration.
  - Display configuration (contrast only).
  - Set zero and span parameters.

	If you are using the optional external 2-button assembly with the standard display, then you can perform all the above operations without removing external glass cap using the external buttons.

	Lower range value (LRV): A display parameter (standard display), which allows users to enter the measuring value for which the analog output will be scaled to 4mA. **Upper range value (URV):** A display parameter (standard display), which allows users to enter the measuring value for which the analog output will be scaled to 20mA.

11 Application Design – ST 700 Basic Transmitter

11.1 Overview

This section discusses the considerations involved with deploying a Honeywell ST 700 basic transmitter in a process system. The following areas are covered:

- Safety.
- Input and output data.
- Reliability.
- Environmental limits.
- Installation considerations.
- Operation and maintenance.
- Repair and replacement.

11.2 Accuracy

The ST 700 basic transmitter measures the gauge, differential, or absolute pressure of a process and reports the measurement to a receiving device.

11.2.1 Diagnostic Messages

Transmitter standard diagnostics are reported in the two basic categories listed in Table 4. Problems detected as critical diagnostics drive the analog output to the programmed burnout level. Problems detected as non-critical diagnostics may affect performance without driving the analog output to the programmed burnout level. Informational messages (not listed in Table 4 report various transmitter status or setting conditions.

	The Standard Display is only available on HART transmitters

	The Standard Display only displays critical diagnostics (Meter Body Fault, Electronics Module Fault and Meter Body Communication Fault). Non-critical diagnostics are not displayed.

11.3 Safety

11.3.1 Safety Integrity Level (SIL)

The ST 700 basic transmitter has met manufacturer design process requirements of Safety Integrity Level (SIL) 3. These are intended to achieve sufficient integrity against systematic errors of design by the manufacturer.

A Safety Instrumented Function (SIF) designed with this product must not be used at a SIL level higher than the statement, without “prior use” justification by the end user or diverse technology redundancy in the design.

Refer to the *Honeywell SmartLine Safety Manual*, Document # 34-ST-25-37, for additional information.

12 Installation and Startup – ST 700 Basic Transmitter

12.1 Installation Site Evaluation

Evaluate the site selected for the ST 700 basic transmitter installation with respect to the process system design specifications and Honeywell's published performance characteristics for your particular model. Some parameters that you may want to include in your site evaluation are:

- Environmental Conditions:
  - Ambient Temperature.
  - Relative Humidity.
- Potential Noise Sources:
  - Radio Frequency Interference (RFI).
  - Electromagnetic Interference (EMI).
- Vibration Sources
  - Pumps.
  - Motorized System Devices (e.g., pumps).
  - Valve Cavitation.
- Process Parameters
  - Temperature.
  - Maximum Pressure Rating.

12.2 Honeywell Versatilis Configurator

The Honeywell Versatilis Configurator, hereinafter referred as HVC in this document, consists of the Advanced Communication Interface and Honeywell Versatilis Configurator app. It is a next-generation universal handheld solution for configuring, calibrating, monitoring and diagnosing field devices. It converts conventional field devices to smart field devices and lets them communicate with the Honeywell Versatilis Configurator through Bluetooth.

For more information, refer to the '*Setup*' section in the Honeywell Versatilis Configurator User Manual, 34-ST-25-70 (click the link and navigate to the 'Support' tab to access the manual) for device operation and maintenance.

12.3 Display Installation Precautions

Temperature extremes can affect display quality. The display can become unreadable at temperature extremes; however, this is only a temporary condition. The display will again be readable when temperatures return to within operable limits.

The display update rate may become slower at cold temperature extremes, but as with readability, normal updating resumes when temperatures are within limits for full operability.

	The transmitter should not be operated without the endcap covers on. Covers can be removed temporarily for configuration with buttons or during maintenance/wiring. The static voltage must be discharged before removing the cover.

12.4 Mounting – ST 700 Basic Transmitter

12.4.1 Summary

ST 700 basic transmitter models, except flush mounts and those with integral flanges, can be attached to a two-inch (50 millimeters) vertical or horizontal pipe using Honeywell's optional angle or flat mounting bracket; alternately you can use your own bracket. Flush-mount models are attached directly to a process pipe or tank by a one-inch weld nipple. Models with integral flanges are supported by the flange connection.

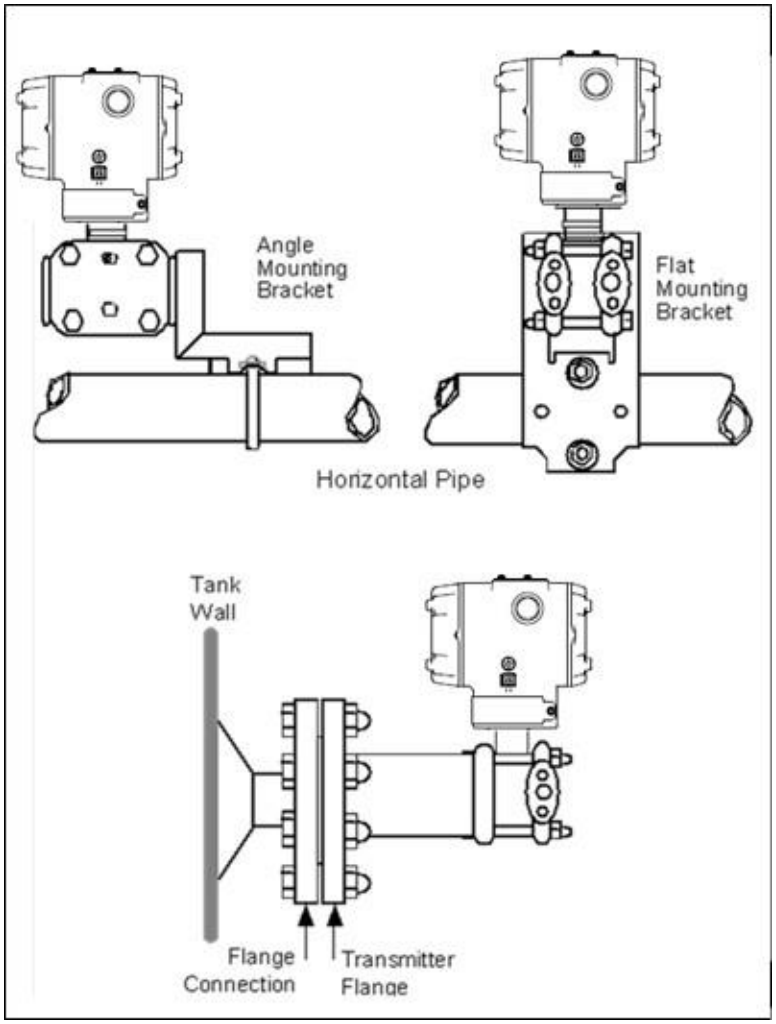

Figure 43 – ST 700 Basic Transmitter - Typical Bracket Mounted and Flange Mounted Installations

12.5 Flush mounting – ST 700 Basic Transmitter

To mount a flush mounted model, cut a hole for a 1” standard pipe in the tank or pipe where the transmitter is to be mounted. Weld the 1” mounting sleeve to the wall of the tank or to the hole cut on the pipe. Insert the meter body of the transmitter into the mounting sleeve and secure with the locking bolt. Tighten the bolt to a torque of 6.4 Nm +/- 0.30 Nm (4.7 ft-lbs +/- 0.2 ft.-lbs.). Figure 45 shows a typical installation for a transmitter with a flush mount on a pipe.

Once the transmitter is mounted, the electronics housing can be rotated to the desired position. See Figure 48 for details.

ATTENTION: On insulated tanks, remove enough insulation to accommodate the mounting sleeve.

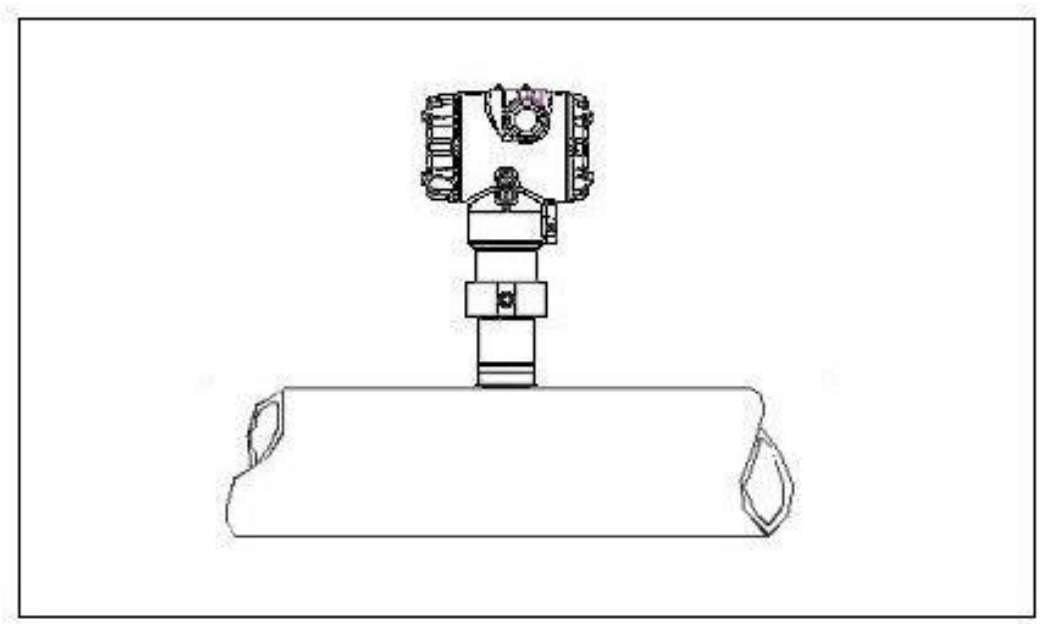

Figure 44 - ST 700 Basic Transmitter – Typical Flush Mounted Transmitter Installation

12.5.1 Mounting Dimensions for ST 700 Basic Transmitter

Refer to Honeywell drawing number 50049930 (Dual Head), 50049931 (In-Line), 50049932 (flange Mount) 50049933 (Extended flange), 50049934 (Remote Seal) and 50049936 (flush mount pressure transmitter) for detailed dimensions. Abbreviated overall dimensions are also shown on the Specification Sheets for the transmitter models. This section assumes that the mounting dimensions have already been taken into account and the mounting area can accommodate the transmitter.

12.5.2 Bracket Mounting Procedure for ST 700 Basic Transmitter

If you are using an optional bracket, start with Step 1. For an existing bracket, start with Step 2.

1. Refer to Figure 46 for position of the bracket on a 2-inch (50.8mm) nominal, 2.38-inch (60.4mm) actual, horizontal or vertical pipe, and install a "U" bolt around the pipe and through the holes in the bracket. Secure the bracket with the nuts and lock washers provided.

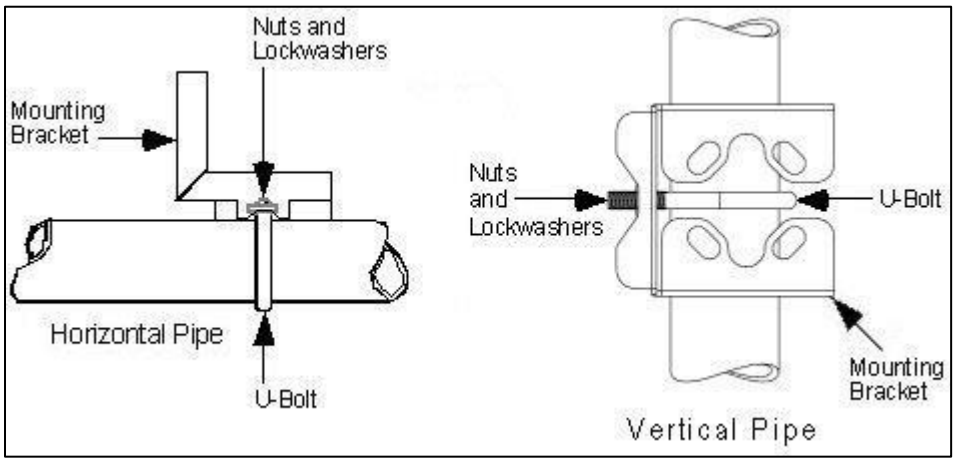

Figure 45 – ST 700 Basic Transmitter – Angle Mounting Bracket Secured to a Horizontal or Vertical Pipe

2. Align the appropriate mounting holes in the transmitter with the holes in the bracket. Use the bolts and washers provided to secure the transmitter to the bracket; see the following variations.

Table 37 – ST 700 Basic Transmitter - Mounting Bracket procedure

Transmitter Type	Use Hardware
DP with double-ended process heads and/or remote seals.	Alternate mounting holes in the ends of the heads.
In-line GP and AP models (STG7xS and STA7xS)	The smaller "U" bolt provided to attach the meter body to the bracket. See the following example.
Dual-head GP and AP	Mounting holes in the end of the process head.

Example: Inline model mounted to an optional angle bracket. See Figure 47.

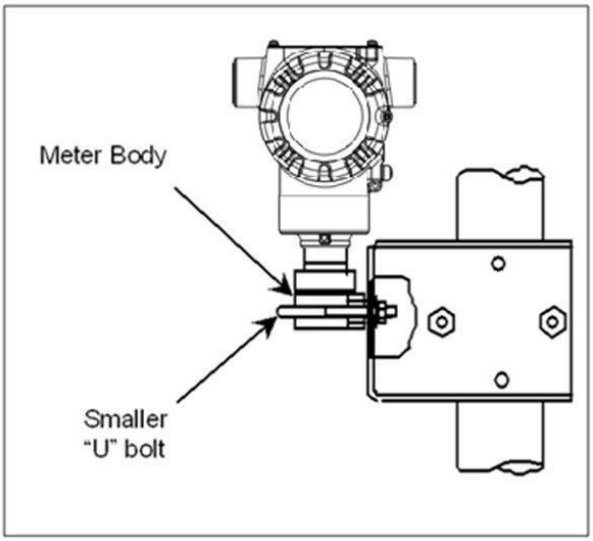

Figure 46 – ST 700 Basic Transmitter – Inline Model Mounted to an Optional Bracket

3. Loosen the set screw on the outside neck of the transmitter one (1) full turn.

4. Rotate the Electronics housing a maximum of 180º left or right from the center to the position you require, and tighten the set screw using a 4mm metric socket head wrench. See the following example and Figure 48.

   Example: Rotating the electronics housing

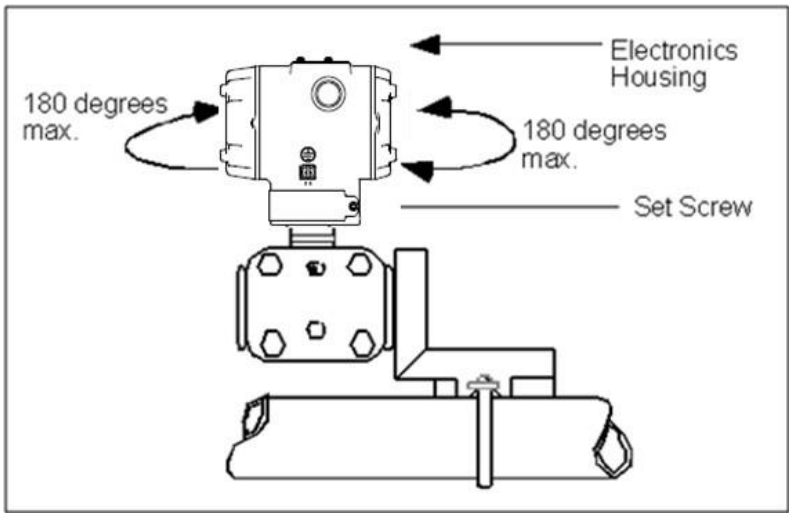

Figure 47 – ST 700 Basic Transmitter - Rotating the Electronics Housing

The mounting position of AP models STA725, STA745, STA72S, STA74S and STA77S becomes critical as the transmitter spans become smaller. A maximum zero shift of 2.5mmHg for these models can result from a mounting position that is rotated 90o from the vertical. A typical zero-shift of 0.12mmHg or 0.20 inH2O can occur for a five (5)-degree rotation from the vertical.

12.5.3 Mounting Transmitters with Small Absolute or Differential Pressure Spans

To minimize positional effects on calibration (zero shift), take the appropriate mounting precautions for the respective transmitter model. Ensure that the transmitter is vertical when mounting models STA725, STA745, STA72S, STA74S and STA77S. You do this by leveling the transmitter side-to-side and front-to-back.

Figure 49 shows how to level a transmitter using a spirit level.

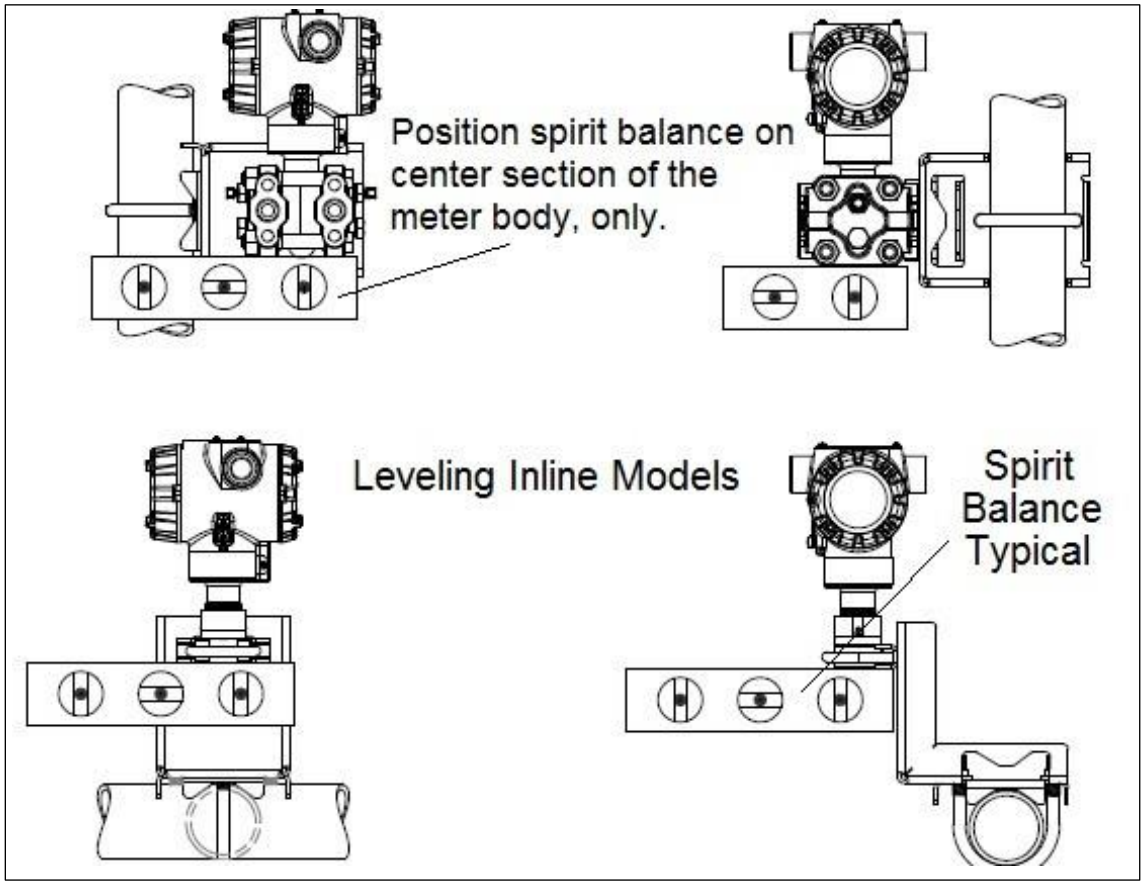

Figure 48 – ST 700 Basic Transmitter, using a Spirit Balance to Level a Transmitter

12.5.4 Flange Mounting – ST 700 Basic Transmitter

Figure 50 shows a typical tank-flange mount installation, with the transmitter flange mounted to the pipe on the wall of the tank.

On insulated tanks, remove enough insulaiton to accommodate the flange extension.

When flange-mounting to a tank, note the following:

- The End User is responsible for providing a flange gasket and mounting hardware suitable for the transmitter service conditions.
- To avoid degrading performance in flush-mounted flanged transmitters, exercise care to ensure that the internal diameter of the flange gasket does not obstruct the sensing diaphragm.
- To prevent performance degradation in extended-mount flanged transmitters, ensure that sufficient clearance exists in front of the sensing diaphragm body.

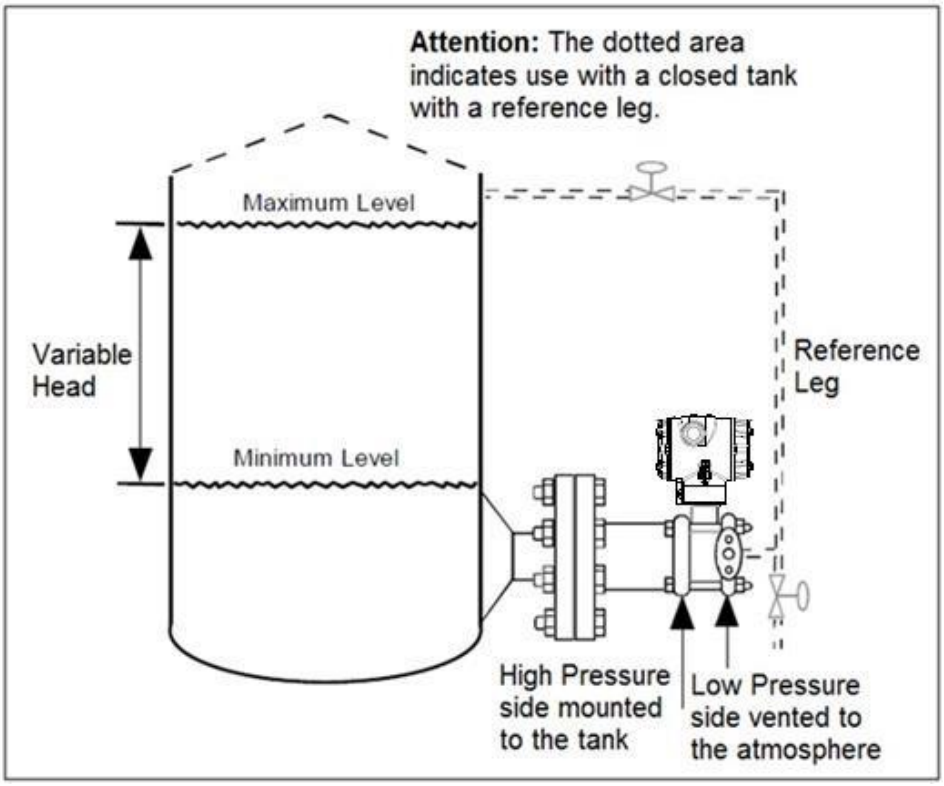

Figure 49 – ST 700 Basic Transmitter, Tank-Flange Mounted Transmitter

12.5.5 Remote Diaphragm Seal Mounting Information – ST 700 Basic Transmitter

The combination of tank vacuum and high pressure capillary head effect should not exceed nine (9) psi (300mmHg) absolute. For insulated tanks, be sure to remove enough insulation to accommodate the flange extension. The end user is responsible for supplying a flange gasket and mounting hardware suitable for the service condition of the transmitter.

Mount the transmitter flanges within the limits in Table 39 for the fill fluid in the capillary tubes, with a tank at one (1) atmosphere.

Table 38 – ST 700 Basic Transmitter, Flange Mounting Guidelines

Fill Fluid	Mount the Flange…
Silicone 200 Oil	≤ 22 feet (6.7 meters) below the transmitter
Chlorotrifluorethylene (CTFE)	≤ 11 feet (3.4 meters) below the transmitter

Refer to Figure 51 for a representative remote diaphragm seal installation. Mount the transmitter at a remote distance determined by the length of the capillary tubing.

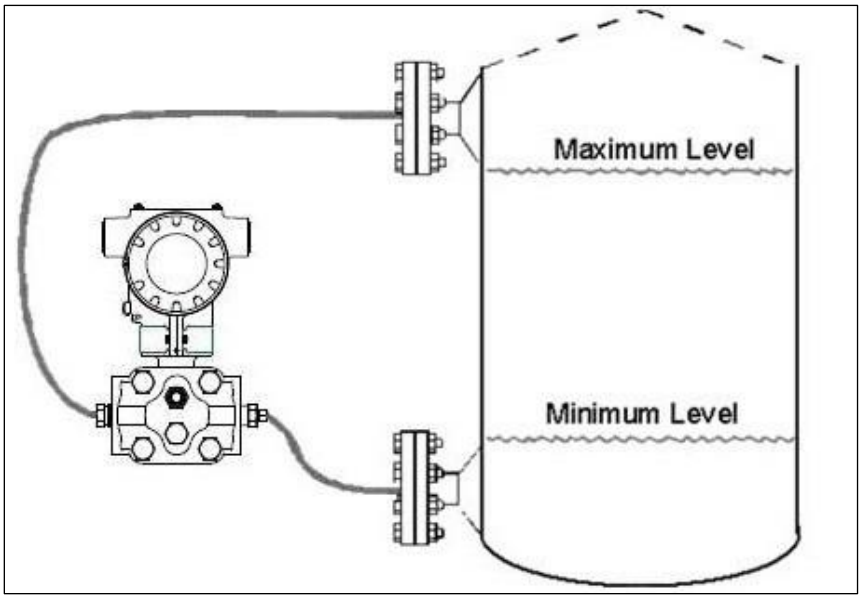

Figure 50 – ST 700 Basic Transmitter - Representative Remote Diaphragm Seal Transmitter Installation

Depending on transmitter model, connect the remote seal to the tank according to Table 39.

Table 39 – ST 700 Basic Transmitter - Remote Diaphragm Mounting Details

Transmitter Model	Connect the Remote Seal on ….	
	Variable Head	Fixed or Constant Head
STR735D	Transmitter High Pressure (HP) Side to tank wall lower flange mounting.	Transmitter Low Pressure (LP) side to tank wall upper flange.

12.6 Piping the ST 700 Basic Transmitter

12.6.1 Piping Arrangements

Piping arrangements vary depending upon process measurement requirements and the transmitter model. For example, a differential pressure transmitter comes with double-ended process heads with ¼-inch NPT connections, which can be modified to accept ½-inch NPT through optional flange adapters. Gauge pressure transmitters are available with various connections for direct mounting to a process pipe.

A ½-inch, schedule 80, steel pipe is commonly used for transmitter integration into a process system. Many piping arrangements use a three-valve manifold to connect the process piping to the transmitter. A manifold makes it easy to install and remove or re-zero a transmitter without interrupting the process. A manifold also accommodates the installation of blow-down valves to clear debris from pressure lines. Figure 52 represents a typical piping arrangement using a three-valve manifold and blow-down lines for a differential pressure transmitter being used to measure flow.

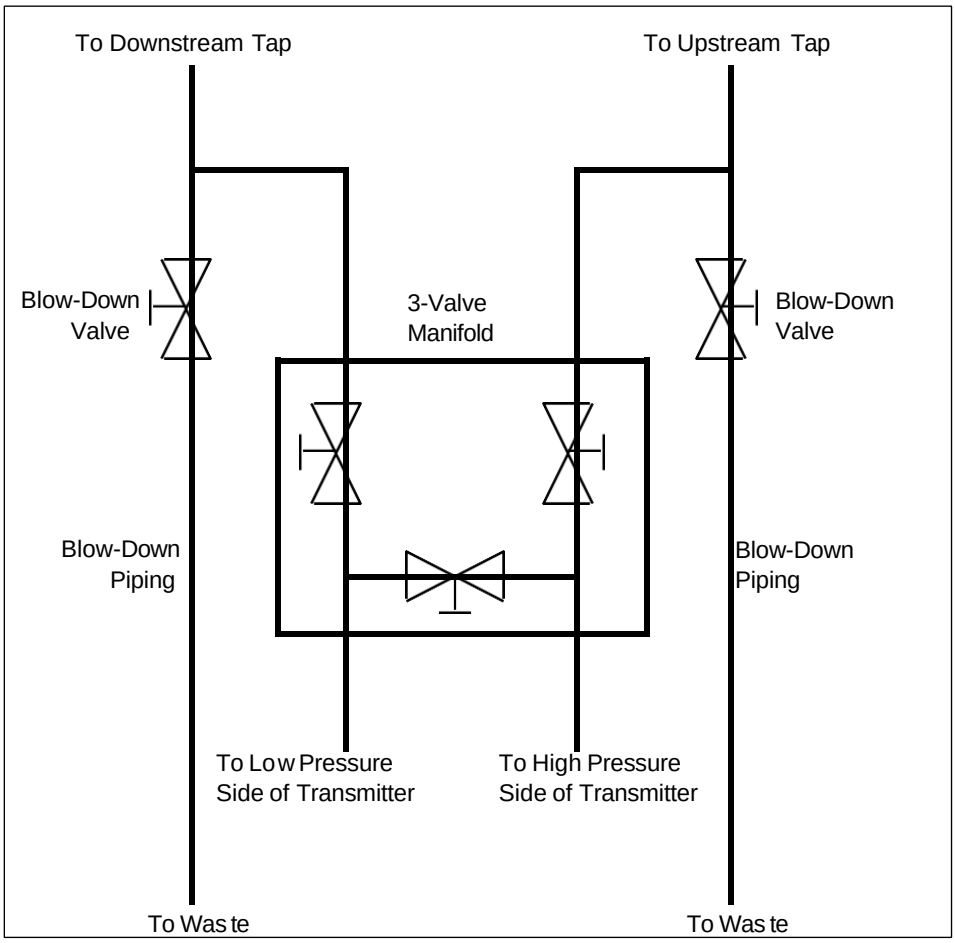

Figure 51– ST 700 Basic Transmitter - Typical 3-Valve Manifold with Blow- Down Piping

12.6.2 Suggestions for Transmitter Location

The following are suggested connections based on what is being processed by the system.

Table 40 – ST 700 Basic Transmitter - Suggested Connection Locations

Process	Suggested Location	Description
Gases	Above the gas line.	The condensate drains away from the transmitter.
Liquids	Below but near the elevation of the process connection.	This minimizes that static head effect of the condensate.
	Level with or above the process connection.	This requires a siphon to protect the transmitter from process steam. The siphon retains water as a fill fluid.

1. For liquid or steam, the piping should slope a minimum of 25.4mm (1 inch) per 305mm (1 foot).
2. Slope the piping down toward the transmitter if it is below the process connection to allow the bubbles to rise back into the piping through the liquid.
3. If the transmitter is located above the process connection, the piping should rise vertically above the transmitter. In this case, slope down toward the flow line with a vent valve at the high point.
4. For gas measurement, use a condensate leg and drain at the low point (freeze protection may be required here).

ATTENTION Care must be taken when installing transmitters on hot processes. The operating temperature limits for the device (as outlined in Table 5) must not be exceeded. Impulse piping may be used to reduce the temperature of the process that comes into contact with the transmitter meter body. As a general rule there is a 56°C drop (100°F) in the temperature of the process for every foot of ½ inch uninsulated piping.

12.6.3 General Piping Guidelines

- When measuring fluids that contain suspended solids, install permanent valves at regular intervals to blow-down piping.
- Blow-down all lines on new installations with compressed air or steam, and flush them with process fluids (where possible) before connecting these lines to the transmitter Meter body.
- Verify that the valves in the blow-down lines are closed tightly after the initial blow-down procedure and each maintenance procedure thereafter.

12.6.4 Procedure to Install Flange Adapters

The following procedure provides the steps for removing and replacing an optional flange adapter on the process head. Refer to Figure 53.

This procedure does not require that the Meter body be removed from the electronics housing. If flange adapters are being replaced with parts from other kits (for example, process heads), follow the procedures for the kits and incorporate the following procedure.

The threaded hole in each flange adapter is offset from center. To ensure proper orientation for re-assembly, note the orientation of the offset relative to each process head **before removing the adapter**.

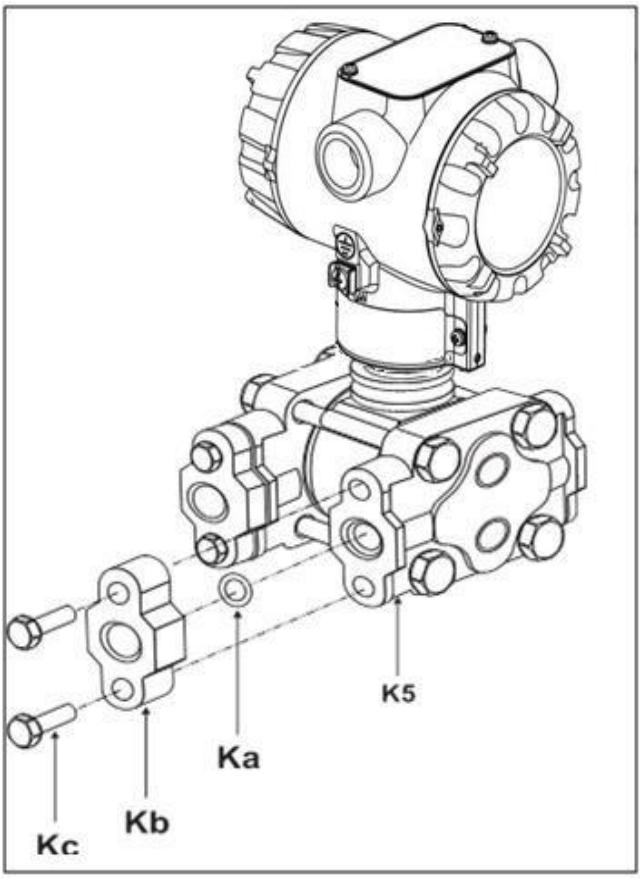

Figure 52 – ST 700 Basic Transmitter - Flange Adapter Removal and Replacement

Refer to the instructions included with the kit for removal and replacement procedures.

12.7 Wiring an ST 700 Basic Transmitter

12.7.1 Overview

The ST 700 basic transmitter is designed to operate in a two-wire power/current loop with loop resistance and power supply voltage within the operating range shown in Figure 54.

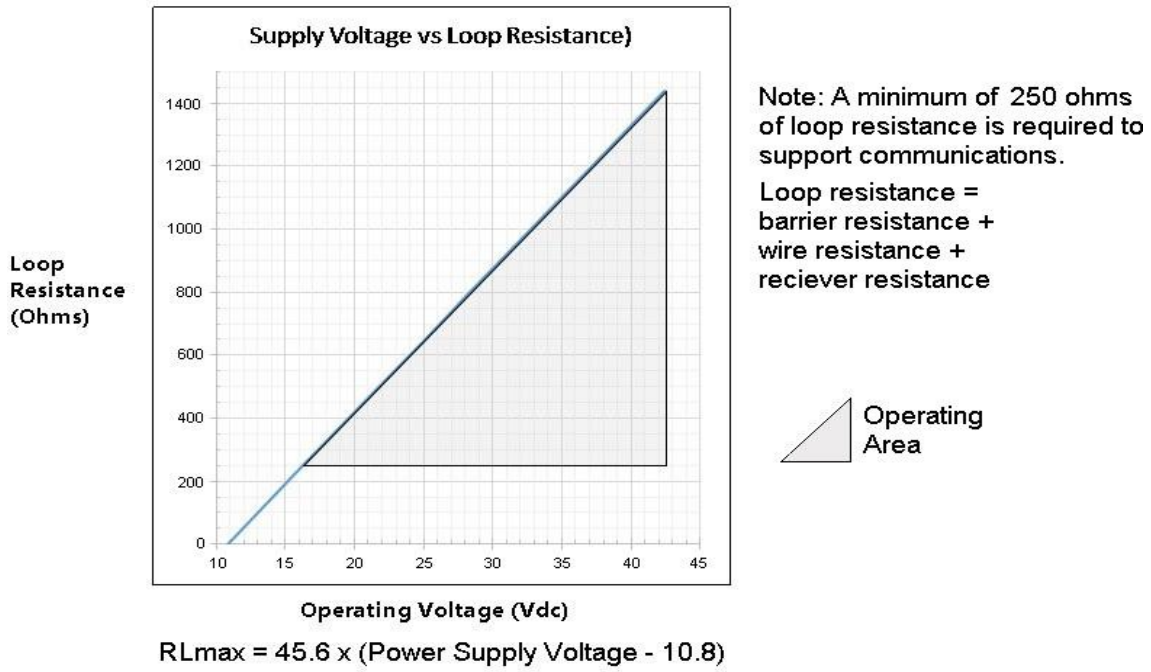

Figure 53 – ST 700 Basic Transmitter - Operating Ranges

Loop wiring is connected to the transmitter by simply attaching the positive (+) and negative (–) loop wires to the positive (+) and negative (–) terminals on the transmitter terminal block in the electronics housing shown in Figure 55.

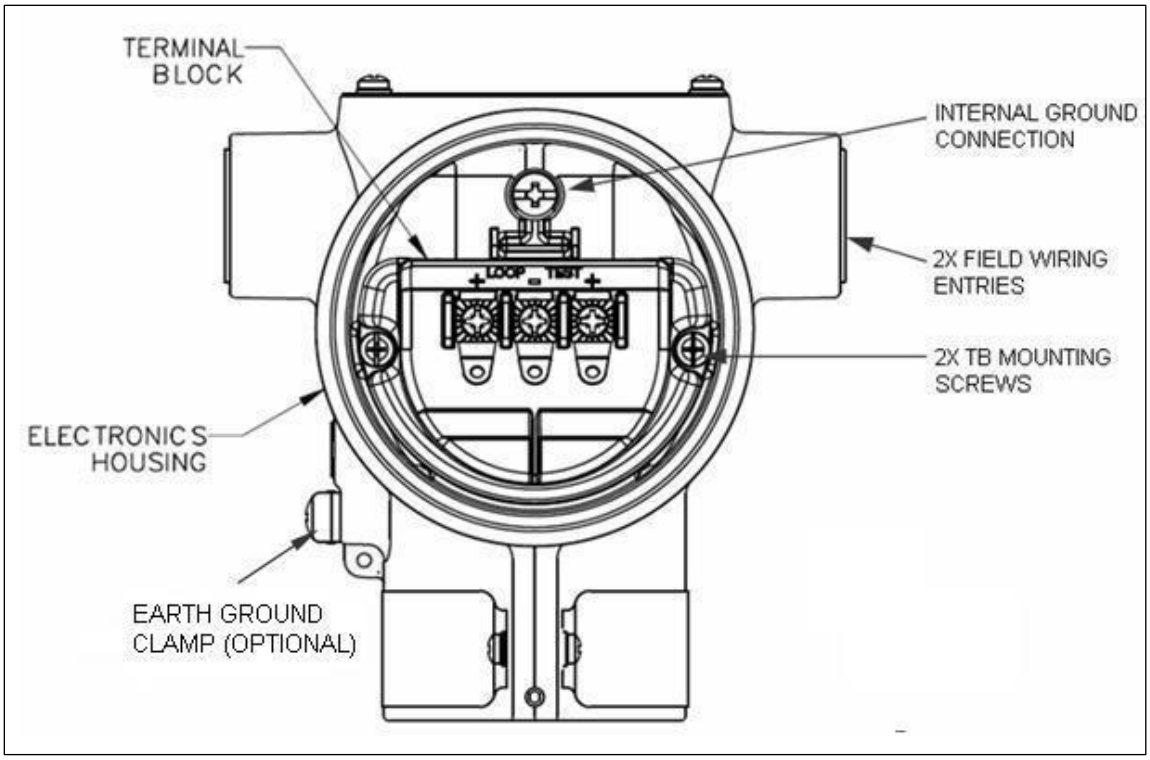

Figure 54 – ST 700 Basic Transmitter - 3-Screw Terminal Board and Grounding Screw

As shown in Figure 55 each transmitter has an internal terminal to connect it to earth ground. Optionally, a ground terminal can be added to the outside of the electronics housing. While it is not necessary to ground the transmitter for proper operation, doing so tends to minimize the possible effects of noise on the output signal and affords protection against lightning and static discharge. An optional lightning terminal block can be installed in place of the non-lightning terminal block for transmitters that will be installed in an area that is highly susceptible to lightning strikes.

Wiring must comply with local codes, regulations and ordinances. Grounding may be required to meet various approval body certification, for example CE conformity. Refer to Appendix A of this document for details.

Figure 54. With optional devices such as remote meter, the voltage drop for these options must be added to the basic 10.8-volt supply requirements to determine the required transmitter voltage (V_{XMTR}) and maximum loop resistance ($R_{LOOP\ MAX}$). Additional consideration is required when sel*ecting* intrinsic safety barriers to ensure that they will supply at least minimum transmitter voltage ($V_{XMTR\ MIN}$), including the required 250 ohms of resistance (typically within the barriers) needed for digital communications.

Transmitter loop parameters are as follows:
$R_{LOOP\ MAX}$ = maximum loop resistance (barriers plus wiring) that will allow proper transmitter operation and is calculated as $R_{LOOP\ MAX} = (V_{SUPPLY\ MIN} - V_{XMTR\ MIN}) \div 21.8mA$.

In this calculation:

$V_{XMTR\ MIN} = 10.8V + V_{LP} + V_{SM}$
$V_{LP} = 0V$ for Honeywell supplied lightning protection option, LP
$V_{SM} = 2.3V$, remote meter

Note that V_{SM} should only be considered if a remote meter will be connected to the transmitter.

The positive and negative loop wires are connected to the positive (+) and negative (–) terminals on the terminal block in the transmitter electronics housing.

Barriers can be installed per Honeywell's instructions for transmitters to be used in intrinsically safe applications.

12.7.2 Digital System Integration Information

Transmitters that are to be digitally integrated to Honeywell's Total Plant Solution (TPS) system will be connected to the pressure transmitter interface module in the Process Manager, Advanced Process Manager or High Performance Process Manager through a Field Termination Assembly. Details about the TPS system connections are given in the *PM/APM SmartLine Transmitter Integration Manual*, PM12-410, which is part of the TDC 3000^X system bookset.

If you are digitally integrating a transmitter in an Allen Bradley Programmable Logic Controller (PLC) process system, the same Field Terminal Assembly (FTA) and wiring procedures used with Honeywell's TPS system are also used with the Allen-Bradley 1771 and 1746 platforms.

12.7.3 Wiring Variations

The above procedures are used to connect power to a transmitter. For loop wiring and external wiring, detailed drawings are provided for transmitter installation in non-intrinsically safe areas and for intrinsically safe loops in hazardous area locations.

If you are using the transmitter with Honeywell's TPS system, see *PM/APM SmartLine Transmitter Integration Manual*, PM12-410, which is part of the TDC 3000^X system book set.

12.7.4 Wiring Procedure

1. See Figure 55 above, for parts locations. Loosen the end cap lock using a 1.5mm Allen wrench.
2. Remove the end cap cover from the terminal block end of the electronics housing.
3. Feed loop power leads through one end of the conduit entrances on either side of the electronics housing. The transmitter accepts up to 16AWG wire.
4. Plug the unused conduit entrance with the appropriate plug for the environment.
5. Connect the positive loop power lead to the positive (+) terminal and the negative loop power lead to the negative (-) terminal. Note that the transmitter is <u>not</u> polarity sensitive.
6. Replace the end cap and secure it in place.

12.7.5 Lightning Protection

If your transmitter includes the optional lightning protection, connect a wire from the Earth Ground Clamp (see Figure 55) to Earth Ground to make the protection effective. Use a size 8 AWG or ($8.37mm^2$) bare or green covered wire for this connection.

12.7.6 Supply Voltage Limiting Requirements

If your transmitter complies with the ATEX 4 directive for self-declared approval per 94/9EC, the power supply has to include a voltage-limiting device. Voltage must be limited such that it does not exceed 42V DC. Consult the process design system documentation for specifics.

12.7.7 Process Sealing

The ST 700 SmartLine pressure transmitter is CSA-certified as a Dual Seal device in accordance with ANSI/ISA–12.27.01–2003, "Requirements for Process Sealing Between Electrical Systems and Flammable, or Combustible Process Fluids."

12.7.8 Explosion-Proof Conduit Seal

When installed as explosion proof in a Division 1 Hazardous Location, keep covers tight while the transmitter is energized. Disconnect power to the transmitter in the non-hazardous area prior to removing end caps for service.

When installed as non-incendive equipment in a Division 2 hazardous location, disconnect power to the transmitter in the non-hazardous area, or determine that the location is non-hazardous before disconnecting or connecting the transmitter wires.

Transmitters installed as explosion proof in Class I, Division 1, Group A Hazardous (classified) locations in accordance with ANSI/NFPA 70, the US National Electrical Code, with 1/2 inch conduit do not require an explosion-proof seal for installation. If 3/4-inch conduit is used, a LISTED explosion-proof seal to be installed in the conduit, within 18 inches (457.2mm) of the transmitter.

12.8 Startup

12.8.1 Overview

This section identifies typical start up tasks associated with several generic pressure measurement applications. It also includes the procedure for running an optional analog output check.

12.8.2 Startup Tasks

After completing the installation and configuration tasks for a transmitter, you are ready to start up the process loop. Startup usually includes:

- Checking zero input
- Reading inputs and outputs
- Applying process pressure to the transmitter.

The actual steps in a startup procedure vary based on the type of transmitter and the measurement application. In general, the procedures in this section are based on using Honeywell Versatilis Configurator to check the transmitter input and output under static process conditions and make adjustments as required initiating full operation with the running process. Note that similar checks can be made using the optional external 2-button assembly, where the transmitter is equipped. Operation with the 2-button assembly is discussed in the Operation section.

When the standard display is connected, the two-button assembly for the standard display is present. The buttons will function 1 second after powering up.

12.8.3 Output Check Procedures

The Output Check comprises the following procedures:

- The loop test procedure checks for continuity and the condition of components in the output current loop.
- The Trim DAC Current procedure calibrates the output of the Digital-to-Analog converter for minimum (0%) and maximum (100%) values of 4mA and 20mA, respectively. This procedure is used for transmitters operating online in analog mode to ensure proper operation with associated circuit components (for example, wiring, power supply, control equipment). Precision test equipment (an ammeter or a voltmeter in parallel with precision resistor) is required for the Trim DAC Current procedure.
- The Apply Values procedure uses actual Process Variable (PV) input levels for calibrating the range of a transmitter. To measure a liquid level for example, a sight-glass can be used to determine the minimum (0%) and maximum (100%) level in a vessel. The PV is carefully adjusted to stable minimum and maximum levels, and the LRV and URV are then set by commands from the Honeywell Versatilis Configurator app.

The transmitter does not measure the given PV input or update the PV output while it operates in the Output mode.

12.8.4 Constant Current Source Mode Procedure

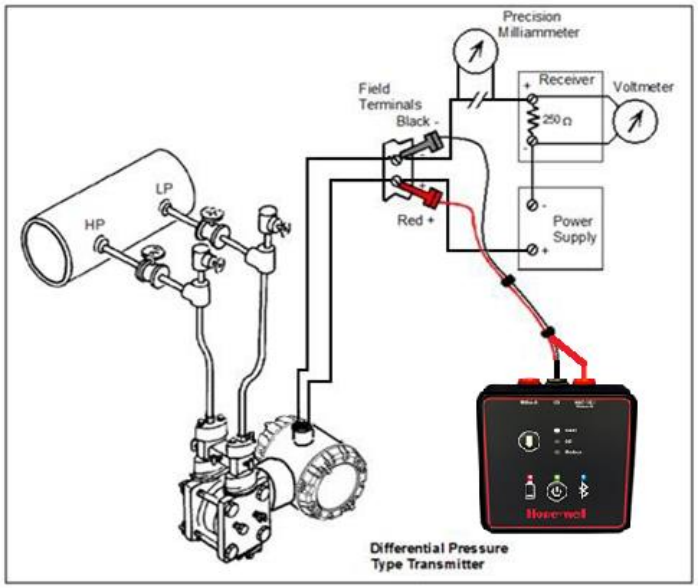

Figure 55 – ST 700 Basic Transmitter - Current Loop Test Connections

1. Refer to Figure 56 for test connections. Verify the integrity of electrical components in the output current loop.
2. Establish communication with the transmitter. For these procedures, the values of components in the current loop are not critical if they support reliable communication between the transmitter and the Configurator.
3. On the Configurator, display the **Output Calibration** box.
4. In the Output Calibration box, select the **Loop Test** button; the **LOOP TEST** box will be displayed.
5. Select the desired constant-level Output: 0%, 100%, or Other (any between 0% - 100%).

6. Select the Set button. A box will be displayed asking **Are you sure you want to place the transmitter in output mode?**

With the transmitter in Analog mode, you can observe the output on an externally-connected meter or on a local meter. In DE mode, you can observe the output on the local meter or on the Configurator Monitor display.

7. Select the Yes button. Observe the output current at the percentage you selected in Step 5.
8. To view the monitor display, navigate back from the LOOP TEST display, and select the MONITOR display. A Confirm popup will be displayed.
9. Select Yes to continue. This concludes the Startup procedure.

13 Operation – ST 700 Basic Transmitter

13.1 Overview

This section provides the information and processes involved for operation of ST 700 basic transmitter using the external two-button options.

13.2 External Two-Button Operation

The ST 700 basic transmitter optional external two-button interface provides a user interface and operation capability without opening the transmitter. Figure 57 shows the location of the two-button option and the labels for each button. See Table 48 for button operation.

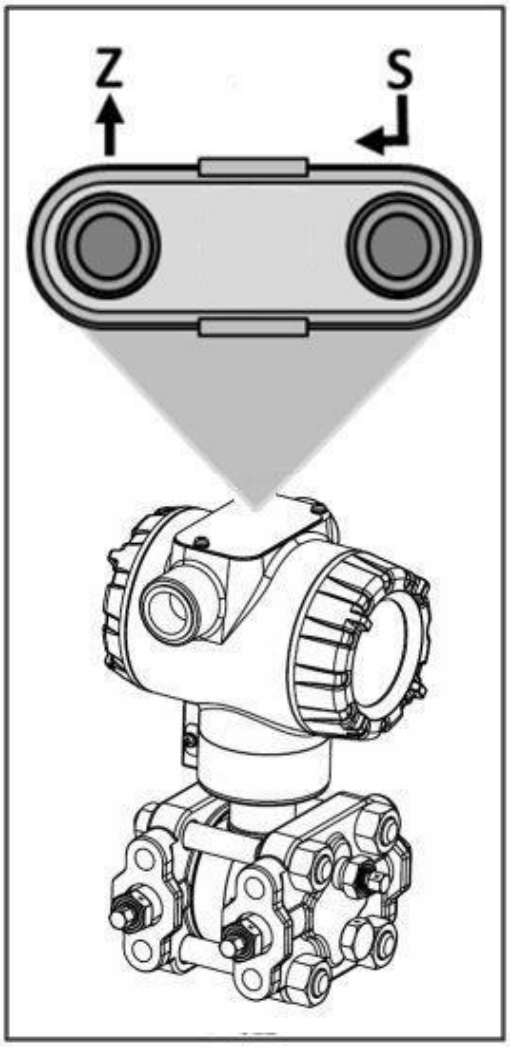

Figure 56 – ST 700 Basic Transmitter - Two-Button Option

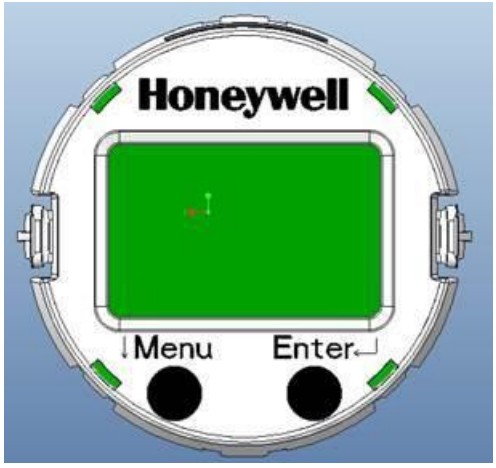

Figure 57 – ST 700 Basic Transmitter - Two-Button Option

The correspondence between Character Codes and Character Patterns used for English and Russian are shown below.

English and Russian character display reference

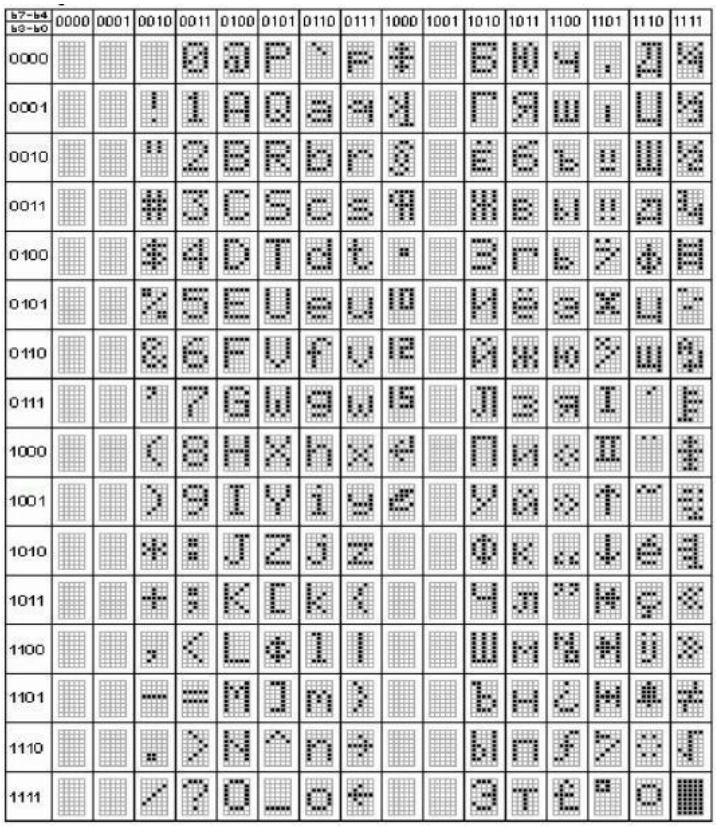

13.2.1 The Standard Display Menu

The standard display menu is implemented as one long single-level menu, after entering into menu mode, and will "wrap around" when it reaches the end of the menu. To enter menu mode, select ↵ in PV display mode. Operation is as follows:

1. Select <**Exit Menu**> and press ↵ to exit the menu.
2. Use the ↓ button to scroll through the list of menu items.
3. Press the ↵ button to select an item in menu mode for data entry or activation. When an item is selected for data entry or activation, the cursor will jump to the lower line of the LCD to allow editing of the value. No action is taken against a menu item until the user presses the ↵ button.
4. If you want to abort a data entry operation, simply refrain from pushing any buttons for more than 10 seconds; the data entry operation will time out and the original value of the selected item will be preserved.
5. If you want to abort a menu operation, simply refrain from pushing any buttons for more than 60 seconds; the menu operation will time out and the exit from menu and it will show the PV value.

The menu is divided into standard menu and extended menu which can be enabled and disabled by extended menu enable/disable operation.

Note: The abort option is not available for the Loop Test parameter. The timeout for the DAC trim operation is more to enable user to calculate the loop current value to enter.

Table 41 – ST 700 Basic Transmitter: Standard Display Menu English Language

Menu	Submenu/Selection/ Value Entry	Description	Action
Pressure Units [1UNITS]	atm bar ftH2O68F gf/cm2 inH2O39F inH2O60F inH2O68F inHg0C kgf/cm2 kPa mbar mmH2O4C mmH2O68F mmHg0C MPa Pa psi Torr mH2O4C cmH2O4C	Choose appropriate engineering units from list for calibration and writing LRV/URV. This selection determines the units of the values shown on the following menu items: • Enter LRV • Enter URV • Set LRV • Set URV • Zero Correct • LRV Correct • URV Correct • Cal Low Point • Cal High Point • Cal Low Correct • Cal High Correct • Barometric Correct For calibration, this parameter allows the user to match the value displayed on the menus to the units supported by the user's calibration equipment.	Press ↵ to enter menu selection. ↓Menu to select from list ↵ to enter
Enter LRV [2ENTLRV] Enter URV [3ENTURV]	###. ## ###. ##	The limits are: 2X the Lower Range Limit (LRL) of the Meter body and 2X the Upper Range Limit (URL) of the Meter body. The LRV/URV value will be available in Pressure Units (Simple Display pressure unit)	Press ↵ to enter menu selection. ↓ Menu to select number. ↵ to enter and shift to the next digit to the right.
SET Zero [4SETZRO]	Zero Trim	Perform an input calibration correction by applying process input at zero.	Press ↵ to enter menu selection. Press ↵ to initiate action.

DAC Zero Trim [5ZEROTR] Note: Loop must be removed from Automatic Control	DAC Zero Trim	This selection allows the loop zero output 4mA value to be trimmed. Note: You must connect a current meter to the transmitter to monitor the loop output.	Press ↵ to enter menu selection. ↓ Menu to select number. ↵ to enter and shift to the next digit to the right.
DAC Span Trim [6SPANTR] Note: Loop must be removed from Automatic Control	DAC Span Trim	This selection allows the loop span output 20mA value to be trimmed. Note: You must connect a current meter to the transmitter to monitor the loop output.	
Loop Test [7 LPTEST] Note: Loop must be removed from Automatic Control	Loop Test 12.000	This selection allows the user to force the DAC output to any value between 3.8 and 20.8 mA. Note: This selection will put the DAC into Fixed Output Mode, as indicated by the flashing output value. Navigation away from this menu item will return the loop to Normal (Automatic) Mode.	Press ↵ to enter menu selection ↓ to select number. ↵ to enter and shift to the next digit to the right
Set LRV [8SETLRV]	Set LRV	Executing this selection performing for Zero operation. Note: The PV value shown in bottom line will be available in Pressure Units (Simple Display pressure unit)	Press ↵ to enter menu selection. Press ↵ to initiate action.
Set URV [9SETURV]	Set URV	Executing this selection for Span operation Note: The PV value shown in bottom line will be available in Pressure Units (Simple Display pressure unit)	
Contrast [10CNTRST]	Contrast level	Adjust the LCD contrast level. Range from » (1) to »»»»»»»»»»» (7) Default: »»»»»»»» (7)	Press ↵ to enter Menu selection. Menu to select level. ↵ to Enter

LRV Corrects [11LRVCOR]	Calibration Methods	Perform an input calibration correction by applying process input at the configured LRV level.	Press ↵ to enter menu selection. Press ↵ to initiate action.
URV Corrects [12URVCOR]	Calibration Methods	Perform an input calibration correction by applying process input at the configured URV level.	Press ↵ to enter menu selection. Press ↵ to initiate action.
Reset Corrects [13RSTCOR]	Calibration Methods	Executing this selection resets the Zero, LRV, URV, Cal Low, Cal High and Barometric Standard Corrects back to factory values.	Press ↵ to enter menu selection. Press ↵ to initiate action.
Tag Id [14TAGID]	□□□□□□□□	Character string of device tag text for display. x = any Alphanumeric value	Press ↵ to enter menu selection ↓ to select alphanumeric character. ↵ to enter and shift to the next character to the right
Device Firmware [15DEVFW]	□□□□□□□□	Menu item shows the current Firmware version of the device. x = any numeric value.	↓Menu to select from list ↵ to enter
Sensor Firmware [16SENFW]	□□□□□□□□	Menu item shows the current Firmware version of the sensor. x = any numeric value	↓Menu to select from list ↵ to enter
PV Damping [17PVDAMP]	##.#	Enter a value for damping of the device output. Entries may be any value from 0.00 to 32.00 seconds.	Press ↵ to enter menu selection ↓ to select number. ↵ to enter and shift to the next digit to the right

Filter Selection [18FLTSEL]	STDSOR FASTSOR	Configure the desired performance for the Output Speed of Response Filter. Select from: Standard SOR: excellent speed of response to input changes with optimal noise performance Fast SOR: fastest speed of response to input changes.	Press ↵ to enter menu selection ↓Menu to select from list ↵ to enter
NAMUR [19NAMUR]	DISABLE ENABLE	select to enable or disable the Namur option for effect on output signal.	Press ↵ to enter menu selection ↓Menu to select from list ↵ to enter
Language Selection [20LNGSEL]	ENGLISH RUSSIAN	Standard display language selection: Select English or Russian option to show display in selected language.	Press ↵ to enter menu selection ↓Menu to select from list ↵ to enter
Transfer Function [21TXFRFN]	LINEAR SQRT	Pressure Transfer function: Select the pressure transfer function for calculated output: Linear: (output scaled linearly per configured range) Square Root: (output scaled as square root conversion per configured range - for flow measurements).	Press ↵ to enter menu selection ↓Menu to select from list ↵ to enter
Low Flow Cut Off Mode [22CUTFMD]	ZROFLOW SBRKPT DAULSLP	Low Flow Cutoff Mode: For Square Root (Transfer function) configurations only, choose the operating mode to determine the low flow cutoff breakpoint: Dual slope: (breakpoint determined by dual slope calculation) User configuration: (breakpoint defined by user). Zero Flow: Sets analog output to 4mA when square root / flow is below user defined flow cutoff value. Note: Sets loop output to low saturation when the differential pressure is below –10%Flow..	Press ↵ to enter menu selection ↓Menu to select from list ↵ to enter

Low Flow Cut Off Breakpoint [23%FLOW]	##.#	When “User Configuration” is selected for Low Flow Cutoff Mode, enter the desired breakpoint value.	Press ↵ to enter menu selection ↓ to select number. ↵ to enter and shift to the next digit to the right
SP Zero Correct [24SPZRO]	Corrects the static pressure to a zero-value psi for DP transmitters only	Performs the correction of measured static pressure value to a value of zero psi. Executing this selection corrects Static Pressure Zero based on the input static pressure. The live value of the static pressure input is shown on this display so the user can easily see the result of the correction.	Press ↵ to enter menu selection Press ↵ to initiate action
SP Reset Correct [25SPRST]	Resets SP Zero Correct	Executing this selection resets Static Pressure Zero to the factory value of 0.	Press ↵ to enter menu selection Press ↵ to initiate action
Barometric Standard [26BARSTD]	###. ###	Available for AP models only. The pressure value for an absolute pressure correction when the pressure input is open to the atmosphere. Enter an atmospheric pressure value corresponding to barometric standard. If the difference between the measured atmospheric pressure and the user-entered barometric standard pressure is > 1 psi (27.680672 inH2O [4°C]) the calibration will not be performed. Range: 330-490 inH2O [4°C] Default: 406.782 inH2O [4°C]	Press ↵ to enter menu selection ↓ Menu to select number. ↵ to enter and shift to the next digit to the right

Barometric Correct [27BARCOR]	One point field offset Calibration Method.	Available for AP models only. Executing this selection corrects input pressure to the Barometric Standard value when the pressure input is open to the atmosphere. The live value of the pressure input is shown on this display so the user can easily see the result of the correction.	Press ↵ to enter menu selection Press ↵ to initiate action
Calibrate High Point [28CAL HI]	######. ##	The upper pressure value for a two-point field calibration within the LRV to URV span. Cal high point value in inH2O [4°C] Range: LRV to URV Default: URV	Press ↵ to enter menu selection ↓ Menu to select number. ↵ to enter and shift to the next digit to the right
Calibrate Low Point [29CAL LO]	######. ##	The lower pressure value for a two-point field calibration within the LRV to URV span. Cal low point value in inH2O [4°C] Range: LRV to URV Default: LRV	Press ↵ to enter menu selection ↓ Menu to select number. ↵ to enter and shift to the next digit to the right
Calibrate Adjust Ratio [30CALRTO]	#. ##	A ratio value that adjusts the calibrated curve between the Cal Low and High Points. Error Adjustment Ratio Range: 0.5 to 1.5 Default: 1.0	Press ↵ to enter menu selection ↓ Menu to select number. ↵ to enter and shift to the next digit to the right

Calibrate Low Correct [31LO COR]	Two-point Field Accuracy Calibration Method for DP/AP/GP transmitters	Not normally used. See Field Calibration for Alternate Ranges, below. Executing this selection corrects input pressure to be at or near the Cal Low Point without compromising LRV and URV corrections. A trial-and-error approach using different Cal Adjust Ratio values and repeated executions of Cal Low Correct followed by Cal High Correct may be required. The live value of the primary pressure input is shown on this display so the user can easily see the result of the correction. Note: Cal Low Correct must be performed before Cal High Correct, but Cal High Correct may be repeated as necessary.	Press ↵ to enter menu selection Press ↵ to initiate action
Calibrate High Correct [32 HI COR]	Two-Point Field Accuracy Calibration Method for DP/AP/GP transmitters	Not normally used. See Field Calibration for Alternate Ranges, below. Executing this selection corrects input pressure to be at or near the Cal High Point without compromising LRV and URV corrections. A trial-and-error approach using different Cal Adjust Ratio values and repeated executions of Cal Low Correct followed by Cal High Correct may be required. The live value of the primary pressure input is shown on this display so the user can easily see the result of the correction. Note: Cal Low Correct must be performed before Cal High Correct, but Cal High Correct may be repeated as necessary.	Press ↵ to enter menu selection Press ↵ to initiate action
Screen Rotation [33 SCRROT]	OFF ON	Automatic display screens switch function.: Select 'ON' to rotate display screens automatically.	Press ↵ to enter menu selection ↓Menu to select from list ↵ to enter

Rotation Interval [34ROTINT]	Display rotation enumerations: 11- 2s 12- 4s 13- 6s 14- 8s 15- 10s 16- 12s 17- 14s 18- 16s 19- 18s 20- 20s	When “ON” is selected for Rotation Interval, enter the desired interval time. Automatic display screen rotation in seconds: Range: 2-20 seconds Default:4 seconds.	Press ↵ to enter menu selection ↓Menu to select from list ↵ to enter
Screen1 PV Selection [35SCRN1]	Display PV enumerations: 5- PRESSURE 6- % OUT 7- LOOPOUT 8- FLOW	Select Process Variable (PV) to be shown on the display from list.	Press ↵ to enter menu selection ↓Menu to select from list ↵ to enter
Screen1 Pressure Units [36PUNIT]	atm bar ftH2O68F gf/cm2 inH2O39F inH2O60F inH2O68F inHg0C kgf/cm2 kPa mbar mmH2O4C mmH2O68F mmHg0C MPa Pa psi Torr mH2O4C cmH2O4C Custom	Choose appropriate engineering units from list	Press ↵ to enter menu selection ↓Menu to select from list ↵ to enter

Screen1 Flow Units [37FUNIT]	m3/hr kg/hr MT/hr L/sec L/hr SCFH CFH gal/hr bbl/hr Igal/hr % SCFD gal/min lb/hr lb/min SCFM MSCFH MMSCFH Custom	Choose appropriate engineering units from list	Press ↵ to enter menu selection ↓Menu to select from list ↵ to enter
Screen1 Flow Custom Unit [38FCUNIT]	□□□□□□□□	When “Custom” selected for Screen1 Flow Units, enter the custom unit name. Character string of flow custom unit text for display x = any Alphanumeric value	Press ↵ to enter menu selection ↓ to select alphanumeric character. ↵ to enter and shift to the next character to the right
Screen1 Flow Scaling Low [39FSCLLO]	########	Value of the flow custom engineering unit corresponding to the LRV of the transmitter The limits are: -999999 to 999999	Press ↵ to enter menu selection ↓ Menu to select number. ↵ to enter and shift to the next digit to the right
Screen1 Flow Scaling High [40FSCLHI]	########	Value of the flow custom engineering unit corresponding to the URV of the transmitter The limits are: -999999 to 999999	Press ↵ to enter menu selection ↓ Menu to select number. ↵ to enter and shift to the next digit to the right

Screen1 Pressure Custom Unit [41PCUNIT]	□□□□□□□□	When “Custom” selected for Screen1 Pressure Units, enter the custom unit name. Character string of pressure custom unit text for display x = any Alphanumeric value	Press ↵ to enter menu selection ↓ to select alphanumeric character. ↵ to enter and shift to the next character to the right
Screen1 Pressure Scaling Low [42PSCLLO]	########	When “Custom” selected for Screen1 Pressure Units, enter the Screen1 Pressure Scaling Low value. Value of the pressure custom engineering unit corresponding to the LRV of the transmitter The limits are: -999999 to 999999	Press ↵ to enter menu selection ↓ Menu to select number. ↵ to enter and shift to the next digit to the right
Screen1 Pressure Scaling High [43PSCLHI]	########	When “Custom” selected for Screen1 Pressure Units, enter the Screen1 Pressure Scaling High value. Value of the pressure custom engineering unit corresponding to the URV of the transmitter The limits are: -999999 to 999999	Press ↵ to enter menu selection ↓ Menu to select number. ↵ to enter and shift to the next digit to the right
Screen2 PV Selection [44SCRN2]	Display PV enumerations: 5- None 6- PRESSURE 7- % OUT 8- LOOPOUT 9- FLOW	Select Process Variable (PV) to be shown on the display from list.	Press ↵ to enter menu selection ↓Menu to select from list ↵ to enter

Screen2 Pressure Units [45PUNIT]	atm bar ftH2O68F gf/cm2 inH2O39F inH2O60F inH2O68F inHg0C kgf/cm2 kPa mbar mmH2O4C mmH2O68F mmHg0C MPa Pa psi Torr mH2O4C cmH2O4C Custom	Choose appropriate engineering units from list	Press ↵ to enter menu selection ↓Menu to select from list ↵ to enter
Screen2 Flow Units [46FUNIT]	m3/hr kg/hr MT/hr L/sec L/hr SCFH CFH gal/hr bbl/hr Igal/hr % SCFD gal/min lb/hr lb/min SCFM MSCFH MMSCFH Custom	Choose appropriate engineering units from list	Press ↵ to enter menu selection ↓Menu to select from list ↵ to enter
Screen2 Flow Custom Unit [47FCUNIT]	□□□□□□□□	When “Custom” selected for Screen2 Flow Units, enter the custom unit name. Character string of flow custom unit text for display x = any Alphanumeric value	Press ↵ to enter menu selection ↓ to select alphanumeric character. ↵ to enter and shift to the next character to the right

Screen2 Flow Scaling Low [48FSCLLO]	########	Value of the flow custom engineering unit corresponding to the LRV of the transmitter. The limits are: -999999 to 999999	Press ↵ to enter menu selection ↓ Menu to select number. ↵ to enter and shift to the next digit to the right
Screen2 Flow Scaling High [49FSCLHI]	########	Value of the flow custom engineering unit corresponding to the URV of the transmitter. The limits are: -999999 to 999999	Press ↵ to enter menu selection ↓ Menu to select number. ↵ to enter and shift to the next digit to the right
Screen2 Pressure Custom Unit [50PCUNIT]	□□□□□□□□	When “Custom” selected for Screen2 Pressure Units, enter the custom unit name. Character string of pressure custom unit text for display x = any Alphanumeric value	Press ↵ to enter menu selection ↓ to select alphanumeric character. ↵ to enter and shift to the next character to the right
Screen2 Pressure Scaling Low [51PSCLLO]	########	When “Custom” selected for Screen2 Pressure Units, enter the Screen2 Pressure Scaling Low value. Value of the pressure custom engineering unit corresponding to the LRV of the transmitter The limits are: -999999 to 999999	Press ↵ to enter menu selection ↓ Menu to select number. ↵ to enter and shift to the next digit to the right

Screen2 Pressure Scaling High [52PSCLHI]	########	When “Custom” selected for Screen2 Pressure Units, enter the Screen2 Pressure Scaling High value. Value of the pressure custom engineering unit corresponding to the URV of the transmitter The limits are: -999999 to 999999	Press ↵ to enter menu selection ↓ Menu to select number. ↵ to enter and shift to the next digit to the right
Screen3 PV Selection [53SCRN3]	Display PV enumerations: 5- None 6- PRESSURE 7- % OUT 8- LOOPOUT 9- FLOW	Select Process Variable (PV) to be shown on the display from list.	Press ↵ to enter menu selection ↓Menu to select from list ↵ to enter
Screen3 Pressure Units [54PUNIT]	atm bar ftH2O68F gf/cm2 inH2O39F inH2O60F inH2O68F inHg0C kgf/cm2 kPa mbar mmH2O4C mmH2O68F mmHg0C MPa Pa psi Torr mH2O4C cmH2O4C Custom	Choose appropriate engineering units from list	Press ↵ to enter menu selection ↓Menu to select from list ↵ to enter

Screen3 Flow Units [55FUNIT]	m3/hr kg/hr MT/hr L/sec L/hr SCFH CFH gal/hr bbl/hr Igal/hr % SCFD gal/min lb/hr lb/min SCFM MSCFH MMSCFH Custom	Choose appropriate engineering units from list	Press ↵ to enter menu selection ↓Menu to select from list ↵ to enter
Screen3 Flow Custom Unit [56FCUNIT]	□□□□□□□□	When “Custom” selected for Screen3 Flow Units, enter the custom unit name. Character string of flow custom unit text for display x = any Alphanumeric value	Press ↵ to enter menu selection ↓ to select alphanumeric character. ↵ to enter and shift to the next character to the right
Screen3 Flow Scaling Low [57FSCLLO]	########	Value of the flow custom engineering unit corresponding to the LRV of the transmitter The limits are: -999999 to 999999	Press ↵ to enter menu selection ↓ Menu to select number. ↵ to enter and shift to the next digit to the right
Screen3 Flow Scaling High [58FSCLHI]	########	Value of the flow custom engineering unit corresponding to the URV of the transmitter The limits are: -999999 to 999999	Press ↵ to enter menu selection ↓ Menu to select number. ↵ to enter and shift to the next digit to the right

Screen3 Pressure Custom Unit [59PCUNIT]	□□□□□□□□	When “Custom” selected for Screen3 Pressure Units, enter the custom unit name. Character string of pressure custom unit text for display x = any Alphanumeric value	Press ↵ to enter menu selection ↓ to select alphanumeric character. ↵ to enter and shift to the next character to the right
Screen3 Pressure Scaling Low [60PSCLLO]	########	When “Custom” selected for Screen3 Pressure Units, enter the Screen3 Pressure Scaling Low value. Value of the pressure custom engineering unit corresponding to the LRV of the transmitter The limits are: -999999 to 999999	Press ↵ to enter menu selection ↓ Menu to select number. ↵ to enter and shift to the next digit to the right.
Screen3 Pressure Scaling High [61PSCLHI]	########	When “Custom” selected for Screen3 Pressure Units, enter the Screen3 Pressure Scaling High value. Value of the pressure custom engineering unit corresponding to the URV of the transmitter The limits are: -999999 to 999999	Press ↵ to enter menu selection. ↓ Menu to select number. ↵ to enter and shift to the next digit to the right.
Screen4 PV Selection [62SCRN4]	Display PV enumerations: 5- None 6- PRESSURE 7- % OUT 8- LOOPOUT 9- FLOW	Select Process Variable (PV) to be shown on the display from list.	Press ↵ to enter menu selection. ↓Menu to select from list ↵ to enter

Screen4 Pressure Units [63PUNIT]	atm bar ftH2O68F gf/cm2 inH2O39F inH2O60F inH2O68F inHg0C kgf/cm2 kPa mbar mmH2O4C mmH2O68F mmHg0C MPa Pa psi Torr mH2O4C cmH2O4C Custom	Choose appropriate engineering units from list	Press ↵ to enter menu selection ↓Menu to select from list ↵ to enter
Screen4 Flow Units [64FUNIT]	m3/hr kg/hr MT/hr L/sec L/hr SCFH CFH gal/hr bbl/hr Igal/hr % SCFD gal/min lb/hr lb/min SCFM MSCFH MMSCFH Custom	Choose appropriate engineering units from list	Press ↵ to enter menu selection ↓Menu to select from list ↵ to enter
Screen4 Flow Custom Unit [65FCUNIT]	□□□□□□□□	When “Custom” selected for Screen4 Flow Units, enter the custom unit name. Character string of flow custom unit text for display x = any Alphanumeric value	Press ↵ to enter menu selection. ↓ to select alphanumeric character. ↵ to enter and shift to the next character to the right.

Screen4 Flow Scaling Low [66FSCLLO]	########	Value of the flow custom engineering unit corresponding to the LRV of the transmitter The limits are: -999999 to 999999	Press ↵ to enter menu selection. ↓ Menu to select number. ↵ to enter and shift to the next digit to the right.
Screen4 Flow Scaling High [67FSCLHI]	########	Value of the flow custom engineering unit corresponding to the URV of the transmitter The limits are: -999999 to 999999	Press ↵ to enter menu selection. ↓ Menu to select number. ↵ to enter and shift to the next digit to the right.
Screen4 Pressure Custom Unit [68PCUNIT]	□□□□□□□□	When “Custom” selected for Screen4 Pressure Units, enter the custom unit name. Character string of pressure custom unit text for display x = any Alphanumeric value	Press ↵ to enter menu selection. ↓ to select alphanumeric character. ↵ to enter and shift to the next character to the right.
Screen4 Pressure Scaling Low [69PSCLLO]	########	When “Custom” selected for Screen4 Pressure Units, enter the Screen4 Pressure Scaling Low value. Value of the pressure custom engineering unit corresponding to the LRV of the transmitter. The limits are: -999999 to 999999	Press ↵ to enter menu selection. ↓ Menu to select number. ↵ to enter and shift to the next digit to the right.

Screen4 Pressure Scaling High [70PSCLHI]	########	When “Custom” selected for Screen4 Pressure Units, enter the Screen4 Pressure Scaling High value. Value of the pressure custom engineering unit corresponding to the URV of the transmitter The limits are: -999999 to 999999	Press ↵ to enter menu selection. ↓ Menu to select number. ↵ to enter and shift to the next digit to the right
Extended Menu [EXDMNU]	DISABLE ENABLE	Select ‘Enable’ to enter ‘EX MENU’ and ‘Disable‘ to enter into ‘SD MENU’.	Press ↵ to enter menu selection. ↓Menu to select from list ↵ to enter
[EXIT]	Exit	Exit from Menu	↓Exit from Menu list ↵ to enter

Field Calibration for Alternate Ranges

Although all ST 700 transmitters are precisely calibrated at the factory, user calibration can be performed at two points (Calibrate High Point and Calibrate Low Point) within the span range of LRV to URV, but is typically unnecessary. It is critical that the pressure standard used for calibration at these two points should be certified to at least twice the pressure transmitter’s accuracy. This is to prevent misleading results that can occur when pressure standards are used that are considered accurate but are actually worse than the accuracy of factory-calibrated transmitters.

Table 42 - ST 700 Standard Transmitter: Standard Display Menus Russian Language

Menu	Submenu/Selection/ Value Entry	Description	Action
1Ед.Изм [1UNITS]	атм (atm) Бар (bar) ftH2O68F гс/см2 (gf/cm2) inH2O39F inH2O60F inH2O68F inHg0C кгс/см2 (kgf/cm2) кПа (kPa) мБар (mbar) ммH2O4C (mmH2O4C) ммH2O68F (mmH2O68F) mmHg0C (ммHg0C) МПа (MPa) Па (Pa) пси (psi) торр (Torr) мH2O4C (mH2O4C) смH2O4C (cmH2O4C)	Choose appropriate engineering units from list This selection determines the units of the values shown on the following menu items: • Enter LRV • Enter URV • Set LRV • Set URV • Zero Correct • LRV Correct • URV Correct • Cal Low Point • Cal High Point • Cal Low Correct • Cal High Correct • Barometric Correct For calibration, this parameter allows the user to match the value displayed on the menus to the units supported by the user's calibration equipment.	Press ↵ to enter menu selection ↓Menu to select from list ↵ to enter
2ВвдLRV [2ENTLRV] 3ВвдURV [3ENTURV]	###. ## ###. ##	The limits are: 2X the Lower Range Limit (LRL) of the Meter body and 2X the Upper Range Limit (URL) of the Meter body. The LRV/URV value will be available in Pressure Units (Simple Display pressure unit)	Press ↵ to enter menu selection ↓ Menu to select number. ↵ to enter and shift to the next digit to the right
4УстНол [4SETZRO]	Zero Trim	perform an input calibration correction by applying process input at zero.	Press ↵ to enter menu selection Press ↵ to initiate action
5НолЦАП [5ZEROTR] Note: Loop must be removed from Automatic Control	DAC Zero Trim	This selection allows the loop zero output 4mA value to be trimmed. Note: You must connect a current meter to the transmitter to monitor the loop output.	Press ↵ to enter menu selection ↓ Menu to select number. ↵ to enter and shift to

6ШклЦАП [6SPANTR] Note: Loop must be removed from Automatic Control	DAC Span Trim	This selection allows the loop span output 20mA value to be trimmed. Note: You must connect a current meter to the transmitter to monitor the loop output.	the next digit to the right
7ТокТст [7 LPTEST] Note: Loop must be removed from Automatic Control	Loop Test 12.000	This selection allows the user to force the DAC output to any value between 3.8 and 20.8 mA. Note: This selection will put the DAC into Fixed Output Mode, as indicated by the flashing output value. Navigation away from this menu item will return the loop to Normal (Automatic) Mode.	Press ↵ to enter menu selection ↓ to select number. ↵ to enter and shift to the next digit to the right
8УстLRV [8SETLRV]	Set LRV	Executing this selection performing for Zero operation. Note: The PV value shown in bottom line will be available in Pressure Units (Simple Display pressure unit)	Press ↵ to enter menu selection Press ↵ to initiate action
9УстURV [9SETURV]	Set URV	Executing this selection for Span operation Note: The PV value shown in bottom line will be available in Pressure Units (Simple Display pressure unit)	
10Кнтрст [10CNTRST]	Contrast Level	Adjust the LCD contrast level. Range from » (1) to »»»»»»»»»»» (7) Default: »»»»»»»» (7)	Press ↵ to enter Menu selection Menu to select level. ↵ to Enter
11КорLRV [11LRVCOR]	Calibration Methods	perform an input calibration correction by applying process input at the configured LRV level.	Press ↵ to enter menu selection Press ↵ to initiate action
12КорURV [12URVCOR]	Calibration Methods	perform an input calibration correction by applying process input at the configured URV level.	Press ↵ to enter menu selection Press ↵ to initiate action

13СбрКор [13RSTCOR]	Calibration Methods	clear all user calibration adjustments	Press ↵ to enter menu selection Press ↵ to initiate action
14№Позиц [14TAGID]	□□□□□□□□	Character string of device tag text for display x = any Alphanumeric value	Press ↵ to enter menu selection ↓ to select alphanumeric character. ↵ to enter and shift to the next character to the right
15DEV№ПО [15DEVFW]	□□□□□□□□	Menu item shows the current Firmware version of the device. X = any numeric value	↓Menu to select from list ↵ to enter
16SEN№ПО [16SENFW]	□□□□□□□□	Menu item shows the current Firmware version of the sensor. X = any numeric value	↓Menu to select from list ↵ to enter
17tдемпф [17PVDAMP]	##.#	Enter a value for damping of the device output. Entries may be any value from 0.00 to 32.00 seconds.	Press ↵ to enter menu selection ↓ to select number. ↵ to enter and shift to the next digit to the right
18Ответ [18FLTSEL]	СтдСкан (STDSOR) БыстСкн (FASTSOR)	Filter Performance: Configure the desired performance for the Output Speed of Response Filter. Select from: Standard SOR: excellent speed of response to input changes with optimal noise performance Fast SOR: fastest speed of response to input changes	Press ↵ to enter menu selection ↓Menu to select from list ↵ to enter

19NAMUR [19NAMUR]	Откл (DISABLE) Вкл (ENABLE)	NAMUR:select to enable or disable the Namur option for effect on output signal.	Press ↵ to enter menu selection ↓Menu to select from list ↵ to enter
20Язык [20LNGSEL]	Англ (ENGLISH) Русский (RUSSIAN)	Language selection: Select English or Russian option to show display in selected language.	Press ↵ to enter menu selection ↓Menu to select from list ↵ to enter
21Функц [21TXFRFN]	Линейн (LINEAR) КвдрКор (SQRT)	Pressure Transfer function: Select the pressure transfer function for calculated output: Linear: (output scaled linearly per configured range) Square Root: (output scaled as square root conversion per configured range – for flow measurements)	Press ↵ to enter menu selection ↓Menu to select from list ↵ to enter
22 Отсечк [22CUTFMD]	Нолтечь (ZROFLOW) 1Отсечк (SBRKPT) 2Отсечк (DUALSLP)	Low Flow Cutoff Mode: For Square Root (Transfer function) configurations only, choose the operating mode to determine the low flow cutoff breakpoint: Dual slope: (breakpoint determined by dual slope calculation) User configuration: (breakpoint defined by user) Zero Flow: Sets analog output to 4mA when square root / flow is below user defined flow cutoff value. Note: Sets loop output to low saturation when the differential pressure is below –10%Flow.	Press ↵ to enter menu selection ↓Menu to select from list ↵ to enter

23%Отсеч [23%FLOW]	##.#	When “User Configuration” is selected for Low Flow Cutoff Mode, enter the desired breakpoint value.	Press ↵ to enter menu selection ↓ to select number. ↵ to enter and shift to the next digit to the right
SP Zero Correct [24SPZRO]	Corrects the static pressure to a zero value psi for DP transmitters only	Performs the correction of measured static pressure value to a value of zero psi. Executing this selection corrects Static Pressure Zero based on the input static pressure. The live value of the static pressure input is shown on this display so the user can easily see the result of the correction.	Press ↵ to enter menu selection Press ↵ to initiate action
SP Reset Correct [25SPRST]	Resets SP Zero Correct	Executing this selection resets Static Pressure Zero to the factory value of 0.	Press ↵ to enter menu selection Press ↵ to initiate action
Barometric Standard [26BARSTD]	###. ###	Enter an atmospheric pressure value corresponding to a barometric standard. If the difference between the measured atmospheric pressure and the user-entered barometric standard pressure is > 1 psi (27.680672 inH2O [4°C]) the calibration will not be performed. Range: 330-490 inH2O [4°C] Default: 406.782 inH2O [4°C]	Press ↵ to enter menu selection ↓ Menu to select number. ↵ to enter and shift to the next digit to the right
Barometric Correct [27BARCOR]	One point field offset Calibration Method for AP transmitters only	Adjusts the pressure measured by the AP transmitter with the user entered barometric standard.	Press ↵ to enter menu selection Press ↵ to initiate action

Calibrate High Point [28CAL HI]	######. ##	Cal high point value in inH2O [4°C] Range: LRV to URV Default: URV	Press ↵ to enter menu selection ↓ Menu to select number. ↵ to enter and shift to the next digit to the right
Calibrate Low Point [29CAL LO]	######. ##	Cal low point value in inH2O [4°C] Range: LRV to URV Default: LRV	Press ↵ to enter menu selection ↓ Menu to select number. ↵ to enter and shift to the next digit to the right
Calibrate Adjust Ratio [30CALRTO]	#. ##	Error Adjustment Ratio Range: 0.5 to 1.5 Default: 1.0	Press ↵ to enter menu selection ↓ Menu to select number. ↵ to enter and shift to the next digit to the right

Calibrate Low Correct [31LO COR]	Two-point Field Accuracy Calibration Method for DP/AP/GP transmitters	Not normally used. See Field Calibration for Alternate Ranges, below. Executing this selection corrects input pressure to be at or near the Cal Low Point without compromising LRV and URV corrections. A trial-and-error approach using different Cal Adjust Ratio values and repeated executions of Cal Low Correct followed by Cal High Correct may be required. The live value of the primary pressure input is shown on this display so the user can easily see the result of the correction. Note: Cal Low Correct must be performed before Cal High Correct, but Cal High Correct may be repeated as necessary.	Press ↵ to enter menu selection Press ↵ to initiate action
Calibrate High Correct [32 HI COR]	Two-Point Field Accuracy Calibration Method for DP/AP/GP transmitters	Not normally used. See Field Calibration for Alternate Ranges, below. Executing this selection corrects input pressure to be at or near the Cal High Point without compromising LRV and URV corrections. A trial-and-error approach using different Cal Adjust Ratio values and repeated executions of Cal Low Correct followed by Cal High Correct may be required. The live value of the primary pressure input is shown on this display so the user can easily see the result of the correction. Note: Cal Low Correct must be performed before Cal High Correct, but Cal High Correct may be repeated as necessary.	Press ↵ to enter menu selection Press ↵ to initiate action

Screen Rotation [33 SCRROT]	OFF ON	Automatic display screens switch function.: Select 'ON' or 'OFF' to rotate display screens automatically.	Press ↵ to enter menu selection ↓Menu to select from list ↵ to enter
Rotation Interval [34ROTINT]	1- 2s 2- 4s 3- 6s 4- 8s 5- 10s 6- 12s 7- 14s 8- 16s 9- 18s 10- 20s	When "ON" is selected for Rotation Interval, enter the desired interval time. Automatic display screen rotation in seconds: Range: 2-20 seconds Default:4 seconds.	Press ↵ to enter menu selection ↓Menu to select from list ↵ to enter
Screen1 PV Selection [35SCRN1]	Display PV enumerations: 1-Давл-ие (PRESURE) 2-%Выхода (% OUT) 3-ТокВыхд (LOOPOUT) 4-Расход (FLOW)	Select Process Variable (PV) to be shown on the display from list.	Press ↵ to enter menu selection ↓Menu to select from list ↵ to enter
Screen1 Pressure Units [36PUNIT]	атм (atm) Бар (bar) ftH2O68F гс/см2 (gf/cm2) inH2O39F inH2O60F inH2O68F inHg0C кгс/см2 (kgf/cm2) кПа (kPa) мБар (mbar) ммH2O4C (mmH2O4C) ммH2O68F (mmH2O68F) mmHg0C (ммHg0C) МПа (MPa) Па (Pa) пси (psi) торр (Torr) мH2O4C (mH2O4C) смH2O4C (cmH2O4C) Custom	Choose appropriate engineering units from list	Press ↵ to enter menu selection ↓Menu to select from list ↵ to enter

Screen1 Flow Units [37FUNIT]	м3/ч (m3/hr) кг/ч (kg/hr) т/ч (MT/hr) л/с (L/sec) л/ч (L/hr) cft3/ч (SCFH) ft3/ч (CFH) гал/ч (gal/hr) барел/ч (bbl/hr) Igal/hr (галл/ч) % стft3/д (SCFD) галл/мн (gal/min) фунт/ч (lb/hr) фунт/мн (lb/min) cft3/мн (SCFM) стft3/ч (MSCFH) МстМ3/ч (MSCFH) Custom	Choose appropriate engineering units from list	Press ↵ to enter menu selection ↓Menu to select from list ↵ to enter
Screen1 Flow Custom Unit [38FCUNIT]	□□□□□□□□	When “Custom” selected for Screen1 Flow Units, enter the custom unit name. Character string of flow custom unit text for display x = any Alphanumeric value	Press ↵ to enter menu selection ↓ to select alphanumeric character. ↵ to enter and shift to the next character to the right
Screen1 Flow Scaling Low [39FSCLLO]	########	Value of the flow custom engineering unit corresponding to the LRV of the transmitter The limits are: -999999 to 999999	Press ↵ to enter menu selection ↓ Menu to select number. ↵ to enter and shift to the next digit to the right
Screen1 Flow Scaling High [40FSCLHI]	########	Value of the flow custom engineering unit corresponding to the URV of the transmitter The limits are: -999999 to 999999	Press ↵ to enter menu selection ↓ Menu to select number. ↵ to enter and shift to the next digit to the right

Screen1 Pressure Custom Unit [41PCUNIT]	□□□□□□□□	When “Custom” selected for Screen1 Pressure Units, enter the custom unit name. Character string of pressure custom unit text for display x = any Alphanumeric value	Press ↵ to enter menu selection ↓ to select alphanumeric character. ↵ to enter and shift to the next character to the right
Screen1 Pressure Scaling Low [42PSCLLO]	########	When “Custom” selected for Screen1 Pressure Units, enter the Screen1 Pressure Scaling Low value. Value of the pressure custom engineering unit corresponding to the LRV of the transmitter The limits are: -999999 to 999999	Press ↵ to enter menu selection ↓ Menu to select number. ↵ to enter and shift to the next digit to the right
Screen1 Pressure Scaling High [43PSCLHI]	########	When “Custom” selected for Screen1 Pressure Units, enter the Screen1 Pressure Scaling High value. Value of the pressure custom engineering unit corresponding to the URV of the transmitter The limits are: -999999 to 999999	Press ↵ to enter menu selection ↓ Menu to select number. ↵ to enter and shift to the next digit to the right
Screen2 PV Selection [44SCRN2]	Display PV enumerations: 0-None 1-Давл-ие (PRESURE) 2-%Выхода (% OUT) 3-ТокВыхд (LOOPOUT) 4-Расход (FLOW)	Select Process Variable (PV) to be shown on the display from list.	Press ↵ to enter menu selection ↓Menu to select from list ↵ to enter

Screen2 Pressure Units [45PUNIT]	атм (atm) Бар (bar) ftH2O68F гс/см2 (gf/cm2) inH2O39F inH2O60F inH2O68F inHg0C кгс/см2 (kgf/cm2) кПа (kPa) мБар (mbar) ммH2O4C (mmH2O4C) ммH2O68F (mmH2O68F) mmHg0C (ммHg0C) МПа (MPa) Па (Pa) пси (psi) торр (Torr) мH2O4C (mH2O4C) смH2O4C (cmH2O4C) Custom	Choose appropriate engineering units from list	Press ↵ to enter menu selection ↓Menu to select from list ↵ to enter
Screen2 Flow Units [46FUNIT]	м3/ч (m3/hr) кг/ч (kg/hr) т/ч (MT/hr) л/с (L/sec) л/ч (L/hr) cft3/ч (SCFH) ft3/ч (CFH) гал/ч (gal/hr) барел/ч (bbl/hr) Igal/hr (галл/ч) % стft3/д (SCFD) галл/мн (gal/min) фунт/ч (lb/hr) фунт/мн (lb/min) cft3/мн (SCFM) стft3/ч (MSCFH) МстМ3/ч (MSCFH) Custom	Choose appropriate engineering units from list	Press ↵ to enter menu selection ↓Menu to select from list ↵ to enter
Screen2 Flow Custom Unit [47FCUNIT]	□□□□□□□□	When “Custom” selected for Screen2 Flow Units, enter the custom unit name. Character string of flow custom unit text for display x = any Alphanumeric value	Press ↵ to enter menu selection ↓ to select alphanumeric character. ↵ to enter and shift to the next character to the right

Screen2 Flow Scaling Low [48FSCLLO]	########	Value of the flow custom engineering unit corresponding to the LRV of the transmitter The limits are: -999999 to 999999	Press ↵ to enter menu selection ↓ Menu to select number. ↵ to enter and shift to the next digit to the right
Screen2 Flow Scaling High [49FSCLHI]	########	Value of the flow custom engineering unit corresponding to the URV of the transmitter The limits are: -999999 to 999999	Press ↵ to enter menu selection ↓ Menu to select number. ↵ to enter and shift to the next digit to the right
Screen2 Pressure Custom Unit [50PCUNIT]	□□□□□□□□	When “Custom” selected for Screen2 Pressure Units, enter the custom unit name. Character string of pressure custom unit text for display x = any Alphanumeric value	Press ↵ to enter menu selection ↓ to select alphanumeric character. ↵ to enter and shift to the next character to the right
Screen2 Pressure Scaling Low [51PSCLLO]	########	When “Custom” selected for Screen2 Pressure Units, enter the Screen2 Pressure Scaling Low value. Value of the pressure custom engineering unit corresponding to the LRV of the transmitter The limits are: -999999 to 999999	Press ↵ to enter menu selection ↓ Menu to select number. ↵ to enter and shift to the next digit to the right

Screen2 Pressure Scaling High [52PSCLHI]	########	When “Custom” selected for Screen2 Pressure Units, enter the Screen2 Pressure Scaling High value. Value of the pressure custom engineering unit corresponding to the URV of the transmitter The limits are: -999999 to 999999	Press ↵ to enter menu selection ↓ Menu to select number. ↵ to enter and shift to the next digit to the right
Screen3 PV Selection [53SCRN3]	Display PV enumerations: 0-None 1-Давл-ие (PRESURE) 2-%Выхода (% OUT) 3-ТокВыхд (LOOPOUT) 4-Расход (FLOW)	Select Process Variable (PV) to be shown on the display from list.	Press ↵ to enter menu selection ↓Menu to select from list ↵ to enter
Screen3 Pressure Units [54PUNIT]	атм (atm) Бар (bar) ftH2O68F гс/см2 (gf/cm2) inH2O39F inH2O60F inH2O68F inHg0C кгс/см2 (kgf/cm2) кПа (kPa) мБар (mbar) ммH2O4C (mmH2O4C) ммH2O68F (mmH2O68F) mmHg0C (ммHg0C) МПа (MPa) Па (Pa) пси (psi) торр (Torr) мH2O4C (mH2O4C) смH2O4C (cmH2O4C) Custom	Choose appropriate engineering units from list	Press ↵ to enter menu selection ↓Menu to select from list ↵ to enter

Screen3 Flow Units [55FUNIT]	м3/ч (m3/hr) кг/ч (kg/hr) т/ч (MT/hr) л/с (L/sec) л/ч (L/hr) cft3/ч (SCFH) ft3/ч (CFH) гал/ч (gal/hr) барел/ч (bbl/hr) Igal/hr (галл/ч) % стft3/д (SCFD) галл/мн (gal/min) фунт/ч (lb/hr) фунт/мн (lb/min) cft3/мн (SCFM) стft3/ч (MSCFH) МстМ3/ч (MSCFH) Custom	Choose appropriate engineering units from list	Press ↵ to enter menu selection ↓Menu to select from list ↵ to enter
Screen3 Flow Custom Unit [56FCUNIT]	□□□□□□□□	When “Custom” selected for Screen3 Flow Units, enter the custom unit name. Character string of flow custom unit text for display x = any Alphanumeric value	Press ↵ to enter menu selection ↓ to select alphanumeric character. ↵ to enter and shift to the next character to the right
Screen3 Flow Scaling Low [57FSCLLO]	########	Value of the flow custom engineering unit corresponding to the LRV of the transmitter The limits are: -999999 to 999999	Press ↵ to enter menu selection ↓ Menu to select number. ↵ to enter and shift to the next digit to the right
Screen3 Flow Scaling High [58FSCLHI]	########	Value of the flow custom engineering unit corresponding to the URV of the transmitter The limits are: -999999 to 999999	Press ↵ to enter menu selection ↓ Menu to select number. ↵ to enter and shift to the next digit to the right

Screen3 Pressure Custom Unit [59PCUNIT]	□□□□□□□□	When “Custom” selected for Screen3 Pressure Units, enter the custom unit name. Character string of pressure custom unit text for display x = any Alphanumeric value	Press ↵ to enter menu selection ↓ to select alphanumeric character. ↵ to enter and shift to the next character to the right
Screen3 Pressure Scaling Low [60PSCLLO]	########	When “Custom” selected for Screen3 Pressure Units, enter the Screen3 Pressure Scaling Low value. Value of the pressure custom engineering unit corresponding to the LRV of the transmitter The limits are: -999999 to 999999	Press ↵ to enter menu selection ↓ Menu to select number. ↵ to enter and shift to the next digit to the right
Screen3 Pressure Scaling High [61PSCLHI]	########	When “Custom” selected for Screen3 Pressure Units, enter the Screen3 Pressure Scaling High value. Value of the pressure custom engineering unit corresponding to the URV of the transmitter The limits are: -999999 to 999999	Press ↵ to enter menu selection ↓ Menu to select number. ↵ to enter and shift to the next digit to the right
Screen4 PV Selection [62SCRN4]	Display PV enumerations: 0-None 1-Давл-ие (PRESURE) 2-%Выхода (% OUT) 3-ТокВыхд (LOOPOUT) 4-Расход (FLOW)	Select Process Variable (PV) to be shown on the display from list.	Press ↵ to enter menu selection ↓Menu to select from list ↵ to enter

Screen4 Pressure Units [63PUNIT]	атм (atm) Бар (bar) ftH2O68F гс/см2 (gf/cm2) inH2O39F inH2O60F inH2O68F inHg0C кгс/см2 (kgf/cm2) кПа (kPa) мБар (mbar) ммH2O4C (mmH2O4C) ммH2O68F (mmH2O68F) mmHg0C (ммHg0C) МПа (MPa) Па (Pa) пси (psi) торр (Torr) мH2O4C (mH2O4C) смH2O4C (cmH2O4C) Custom	Choose appropriate engineering units from list	Press ↵ to enter menu selection ↓Menu to select from list ↵ to enter
Screen4 Flow Units [64FUNIT]	м3/ч (m3/hr) кг/ч (kg/hr) т/ч (MT/hr) л/с (L/sec) л/ч (L/hr) cft3/ч (SCFH) ft3/ч (CFH) гал/ч (gal/hr) барел/ч (bbl/hr) Igal/hr (галл/ч) % стft3/д (SCFD) галл/мн (gal/min) фунт/ч (lb/hr) фунт/мн (lb/min) cft3/мн (SCFM) стft3/ч (MSCFH) МстМ3/ч (MSCFH) Custom	Choose appropriate engineering units from list	Press ↵ to enter menu selection ↓Menu to select from list ↵ to enter
Screen4 Flow Custom Unit [65FCUNIT]	□□□□□□□□	When “Custom” selected for Screen4 Flow Units, enter the custom unit name. Character string of flow custom unit text for display x = any Alphanumeric value	Press ↵ to enter menu selection ↓ to select alphanumeric character. ↵ to enter and shift to the next character to the right

Screen4 Flow Scaling Low [66FSCLLO]	########	Value of the flow custom engineering unit corresponding to the LRV of the transmitter The limits are: -999999 to 999999	Press ↵ to enter menu selection ↓ Menu to select number. ↵ to enter and shift to the next digit to the right
Screen4 Flow Scaling High [67FSCLHI]	########	Value of the flow custom engineering unit corresponding to the URV of the transmitter The limits are: -999999 to 999999	Press ↵ to enter menu selection ↓ Menu to select number. ↵ to enter and shift to the next digit to the right
Screen4 Pressure Custom Unit [68PCUNIT]	□□□□□□□□	When “Custom” selected for Screen4 Pressure Units, enter the custom unit name. Character string of pressure custom unit text for display x = any Alphanumeric value	Press ↵ to enter menu selection ↓ to select alphanumeric character. ↵ to enter and shift to the next character to the right
Screen4 Pressure Scaling Low [69PSCLLO]	########	When “Custom” selected for Screen4 Pressure Units, enter the Screen4 Pressure Scaling Low value. Value of the pressure custom engineering unit corresponding to the LRV of the transmitter The limits are: -999999 to 999999	Press ↵ to enter menu selection ↓ Menu to select number. ↵ to enter and shift to the next digit to the right

Screen4 Pressure Scaling High [70PSCLHI]	########	When “Custom” selected for Screen4 Pressure Units, enter the Screen4 Pressure Scaling High value. Value of the pressure custom engineering unit corresponding to the URV of the transmitter The limits are: -999999 to 999999	Press ↵ to enter menu selection ↓ Menu to select number. ↵ to enter and shift to the next digit to the right
РасМню [EXDMNU]	Откл (DISABLE) СтМеню (SD MENU) Вкл (ENABLE) ->РсшМеню (EX MENU)	Select ‘Enable’ to enter ‘EX MENU’ and ‘Disable‘to enter into ‘SD MENU’	Press ↵ to enter menu selection ↓Menu to select from list ↵ to enter
Выход [EXIT]	Exit	Exit from Menu	↓Exit from Menu list ↵ to enter

Field Calibration for Alternate Ranges

Although all ST 700 transmitters are precisely calibrated at the factory, user calibration can be performed at two points (Calibrate High Point and Calibrate Low Point) within the span range of LRV to URV, but is typically unnecessary. It is critical that the pressure standard used for calibration at these two points should be certified to at least twice the pressure transmitter’s accuracy. This is to prevent misleading results that can occur when pressure standards are used that are considered accurate, but in reality are worse than the accuracy of factory-calibrated transmitters.

13.2.2 Standard Display Abbreviations

Table 43 – The Standard Display abbreviations

English / Russian Abbreviations	Meaning
OOR / ВнеШкалы	Out of Range
PRSPAN / УмншШкал	Push reduce span
Wrng Mo / НпрвРежм	Wrong Mode
Illegal / НпрвЗнач	Illegal Value
Wrt Err / ОшбПамят	NVM write error
Too Hi / НижНизк	Value/Parameter Too High

Too Lo / ВышВысок	Value/Parameter Too Low
LRV Hi / LRVНизк	LRV too High
LRV Lo / LRVВысок	LRV too Low
URV Hi / URVНизк	URV too High
URV Lo / URVВысок	URV too Low
LargeSP / ВысШкала	Span too large
SmallSP / НизШкала	Span too small
Locked / Заблокир	Device is locked
Multidr / МнТочРеж	Device in multidrop mode
Wrt Prt / ЗащЗапис	Device in write protect mode
NotSprt / НеПоддер	Not supported

13.2.3 Data Entry

Data entry is performed from left to right. Select a character / digit by pressing the ↓ button and then press ↵ to advance to the next character position to the right. Select the crosshatch character ▒ to terminate the entry or if the final character is already a space character, just press **<<** again.

All numeric entries are clamped at the low or high limit if needed. You can determine the low and high limit for a parameter by selecting either the **H** or **L** character while the cursor is positioned over the left-most digit and press the ↵ button. The display will show the selected limit.
For numeric entry sign is required to be entered only for negative numbers. For positive number, select space and move ahead.

Table 44 – ST 700 Basic Transmitter - Two-Button Data Entry

Screen Symbol	Numeric data entry
H	Display the high limit for this parameter. This symbol only appears in the left-most position of the data entry field.
L	Display the low limit for this parameter. This symbol only appears in the left-most position of the data entry field.
<<	Terminate the numeric entry
0 thru 9, Minus, Decimal	These characters are used to enter numeric values. The minus sign only appears in the left-most digit.

13.2.4 Editing a Numeric value

Editing a numeric value is a digit-by-digit process, starting with the left-most digit.

1. Press ↵ to begin the edit process.
2. The standard display will show the current value of the item on the lower line, left justified.
3. Press the ↓ button to select the desired digit, and then press ↵ to advance to the next digit to the right.
4. After the last digit has been entered, press ↵ one more time to write the new value to the transmitter.

13.2.5 Selecting a new setting from a list of choices

Use the procedure described below to select a new setting for parameters that present a list of choices (e.g., PV display, Pressure Units, and so forth).

1. Press ↵ to begin the edit process.
    a. The standard display will show the current setting of the item on the lower line
2. Press the ↓ button to scroll through the list of choices.
3. Press ↵ to make your selection. The new selection will be stored in the transmitter and will be displayed on the lower line.

13.3 Two-Button Operation with no Display Installed

When there is no display installed, the buttons can be used to perform a Zero or Span adjustment and zero correction of the ST 700 basic transmitter. Caution should be taken to ensure these adjustments are only made when the correct input pressures are applied.

13.3.1 Zero Adjustment

This adjustment is the same as performing a Set LRV using the display.

1. Connect a current meter or voltmeter as shown in Figure 56 to monitor the PV output of the transmitter.
2. Using an accurate pressure source, apply pressure equivalent to the transmitter LRV.
3. Press the Zero (↑) button for more than 2 seconds to set the Zero.
4. Verify that the output is now 4 mA.

Note: Pressing the zero button for more than 5 seconds will ignore the button press.

13.3.2 Span Adjustment

This adjustment is the same as performing a Set URV using the display.

1. Connect a current meter or voltmeter as shown in Figure 56 to monitor the PV output of the transmitter.
2. Using an accurate pressure source, apply pressure equivalent to the desired Upper Range Value of the transmitter.
3. Press the **Span** (↵) button for more than 2 seconds to set the span.
4. Verify that the PV output is now 20mA.

Note: Pressing the zero button for more than 5 seconds will ignore the button press.

13.3.3 Zero Correction

This adjustment is the same as performing a zero correct using the display.

1. Connect a current meter or voltmeter as shown in Figure 56 to monitor the PV output of the transmitter.
2. Using an accurate pressure source, apply pressure equivalent to the zero Value of the transmitter.
3. Press the Zero (↑) and Span (↵) buttons together for more than 5 sec to set the span.
4. Verify that the PV is set to 0 value.

Note: Pressing the SPAN button for more than 10 seconds will ignore the button press

You can also use the Honeywell Versatilis Configurator app to make any adjustments to an ST 700 SmartLine pressure transmitter. Alternately, certain adjustments are possible through an Experion Station, if the ST 700 is digitally integrated with either of these stations.

13.4 Changing the Default Failsafe Direction

ST 700 basic transmitters are shipped with a default failsafe direction of upscale. This means that the transmitter output will set the current output to upscale failsafe (maximum output) upon detection of a critical status. You can change the direction from upscale failsafe to downscale failsafe (minimum output) by moving the top jumper located in the electronics module.

13.4.1 Procedure to Establish Failsafe Operation

The failsafe direction display accessible via the Configurator shows only the state of the jumper as it correlates to analog transmitter operation.

The integrated circuits in the transmitter PWA are vunerable to damage by stray static discharges when removed from the electronics housing. Minimize the possibility of static discharge damage when handling the PWA as follows:

Do not touch terminals, connectors, component leads, or circuits when handling the PWA.

When removing or installing the PWA, handle it by its edges or bracket section only. If you need to touch the PWA circuits, be sure you are grounded by staying in contact with a grounded surface or by wearing a grounded wrist strap.

When the PWA is removed from the transmitter, put it in an electrically conductive bag, or wrap it in aluminum foil to protect it.

The following procedure outlines the steps for positioning the write protect and failsafe jumpers on the electronics module. See Figure 59 for the locations of the failsafe and write protect jumpers.

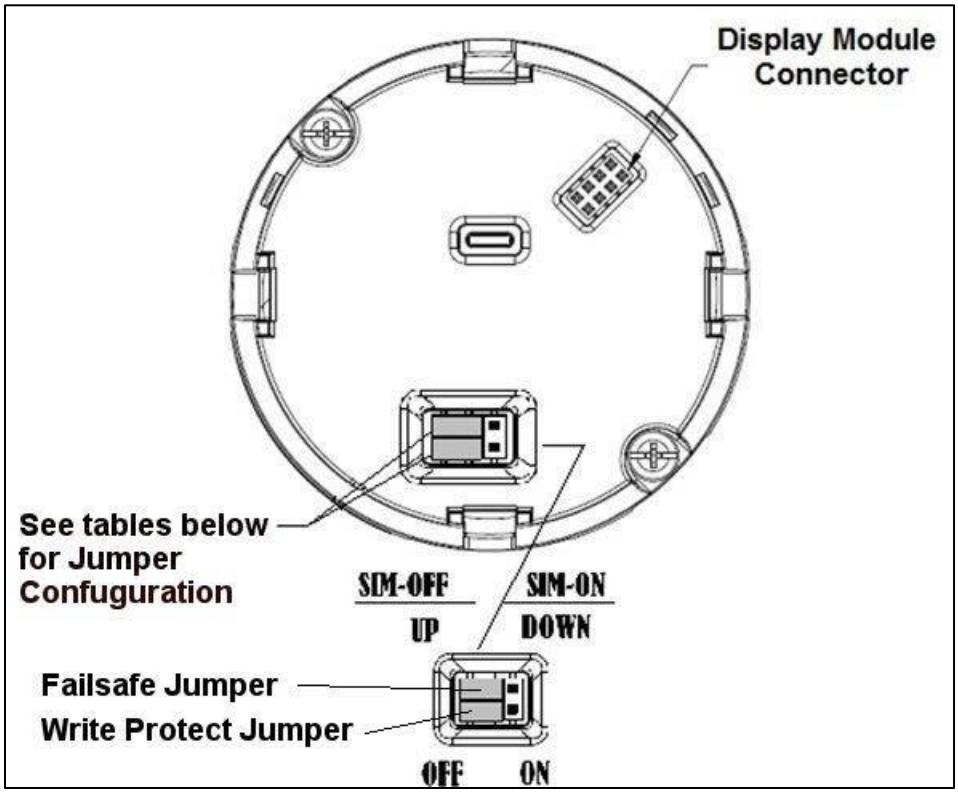

Figure 58 – ST 700 Basic Transmitter - Locating the Failsafe and Write Protect Jumpers

Table 45 – ST 700 Basic Transmitter - HART Failsafe and Write Protect Jumpers

Jumper Arrangements	Description
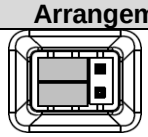	Failsafe = UP (High) Write Protect = OFF (Not Protected)
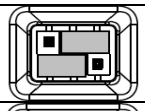	Failsafe = DOWN (Low) Write Protect = OFF (Not Protected)
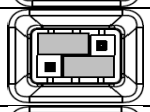	Failsafe = UP (High) Write Protect = ON (Protected)
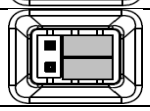	Failsafe = Down (Low) Write Protect = On (Protected)

1. Turn OFF transmitter power (Power removal is only required in accordance with area safety approvals. Power removal is only required in Class 1 Div 1 Explosionproof and Class 1 Div 2 environments).

2. Loosen the end cap lock and unscrew the end cap from the electronics side of the transmitter housing.

3. If equipped with a display module, carefully depress the two tabs on the sides of the display module and pull it off.

4. If necessary, unplug the interface connector from the communication module. Do not discard the connector.

5. Set the Failsafe Jumper (top jumper) to the desired position (UP or DOWN). See Figure 59 and Table 45 for jumper positioning.

6. If applicable, re-install the display module as follows:

   - Orient the display as desired.
   - Install the Interface connector in the display module such that it will mate with the socket for the display in the communication module.
   - Carefully line up the display, and snap it into place. Verify that the two tabs on the sides of the display latch.

   Note: Installing a display module into a powered transmitter may cause a temporary upset to the loop output value.

Orient the display for proper viewing through the end cap window. You can rotate the meter mounting orientation in 90° increments.

7. Restore transmitter power if removed.

13.5 Monitoring the Standard Display

This section describes the information shown on the operator screens of the standard display.

13.5.1 Standard Display

- The PV value is user configurable. This field has 6 characters. The maximum allowable numeric value is 999999 or -999999.
  - If fractional decimals are configured, the fractional positions will be dropped, as required.
  - If the PV value exceeds the above limits, it is divided by 1000 and "K" is appended to the result, allowing a maximum value with multiplier of 99999K or -99999K.

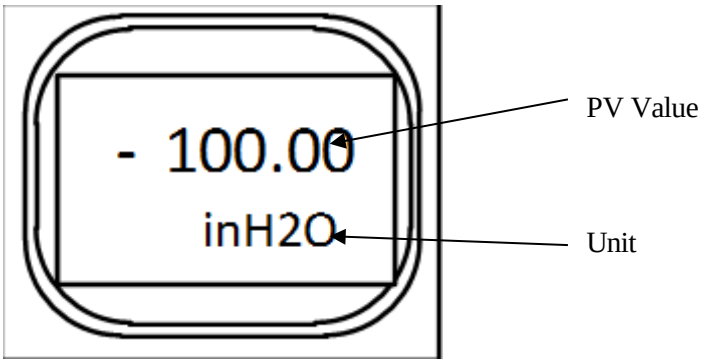

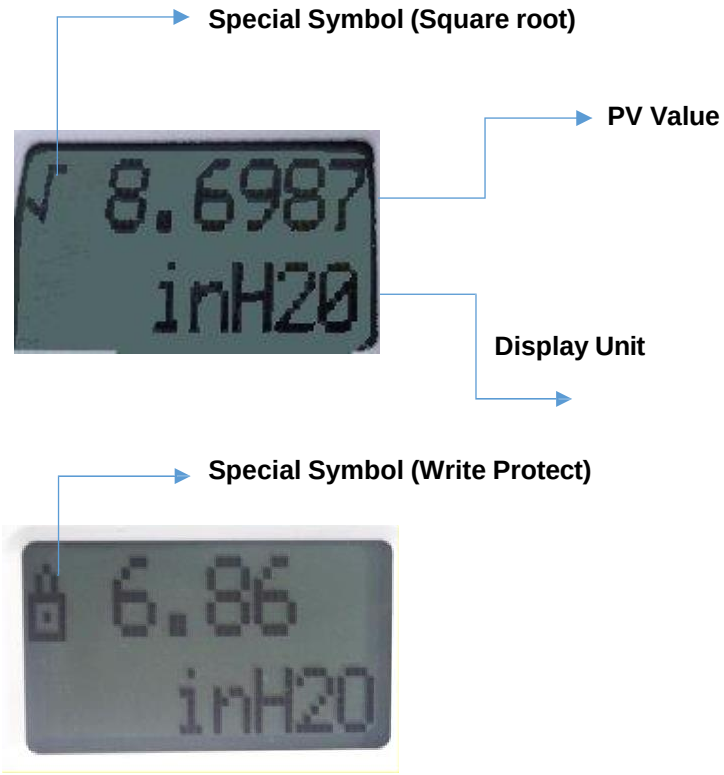

Figure 59 – ST 700 Basic Transmitter - Standard Display with Process Variable Format

14 Maintenance – ST 700 Basic Transmitter

14.1 Overview

This section provides information about preventive maintenance and replacing damaged parts. The topics covered in this section are:

- Preventive maintenance of the meter body barrier diaphragms and process piping to the transmitter.
- Replacement of damaged parts such as the transmitter Printed Wiring Assembly (PWA) and meter body

14.2 Preventive Maintenance Practices and Schedules

The ST 700 basic transmitter does not require any specific maintenance at regularly scheduled intervals. However, it is recommended that you perform these typical inspection and maintenance routines on a schedule that is dictated by the characteristics of the process medium and if blow-down facilities or purge systems are being used.

- Check piping for leaks.
- Clear piping of sediment or other foreign matter.
- Clean the transmitter process heads, including the barrier diaphragms.

14.3 Inspecting and Cleaning Barrier Diaphragms

Depending on the characteristics of the process medium, sediment or other foreign particles may collect in the process head cavity/chamber and cause faulty measurement. In addition, the barrier diaphragm(s) in the transmitter meter body may become coated with residue from the process medium. The latter is also true for external diaphragms on flange-mount and remote seal type transmitters.

In many cases, you can readily remove the process head(s) from the transmitter meter body to clean the process head cavity and inspect the barrier diaphragm(s). For flange-mount and remote seal diaphragms, you may only need to run a purge line in the tank to rinse off the face of the diaphragm(s).

The following procedure comprises the general steps for inspecting and cleaning barrier diaphragms. You may have to modify these steps to meet your particular process or transmitter model requirements. Figure 61 shows an exploded view of a Differential Pressure (DP) transmitter meter body for reference. For disassembly/reassembly purposes, Gauge Pressure (GP) and Absolute Pressure (AP) transmitters are similar.

It is recommended that you remove the transmitter from service and move it to a clean area before disassembling it.

Figure 60 – ST 700 Basic Transmitter - DP Transmitter Head Disassembly

1. Close all valves to isolate the transmitter from the process.
2. Open the vent in the process head to drain fluid from the transmitter meter body, as necessary.
3. Remove the transmitter from the process.
4. Loosen the nuts in the sequence shown in Figure 62
5. Remove the nuts from the bolts that hold the process head(s) to the meter body.
6. Remove the process heads and bolts.
7. Remove the gasket/ O-ring and clean the interior of the process head using a soft bristle brush and an approved solvent.
8. Inspect the barrier diaphragm for signs of deterioration, corrosion, and distortion.
9. If the diaphragm is distorted contact Honeywell for assistance.
10. Install a new gasket/O-ring in each process head.
11. Coat threads on the process head bolts with a suitable anti-seize compound, such as “Never Seez,” or equivalent.
12. Using a torque wrench, gradually tighten the nuts in the sequence shown in Figure 62
13. Tighten head bolts in stages of 1/3 full torque, 2/3 full torque, and full torque. See Table 46 or torque requirements versus transmitter type and model.

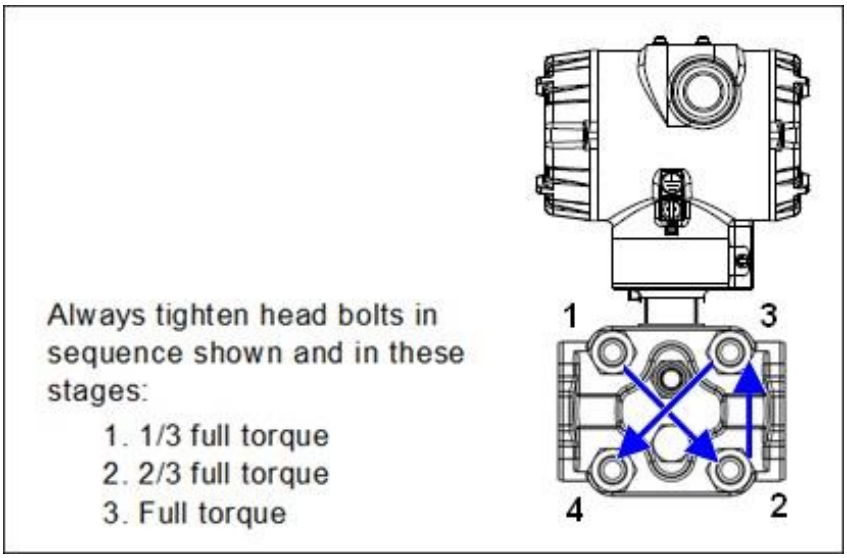

Figure 61 – ST 700 Basic Transmitter - Head Bolt Tightening Sequence

Table 46 – Head Bolt Torque Values

Bolting Type	**50049713XXXX all transmitters except draft range (XXX5)**	**50049713XXX5 Draft Range Transmitter only**
Super Duplex Bolting Option Bolt 514452557-006 Nut 51452559-006	48,8 N-M +/- 2,4 N-M (36.0 Lb-Ft +/- 1.8 Lb-Ft)	20,3 N-M (16.0 Lb-Ft +/- 0.8 Lb-Ft)
316 Stainless Steel Bolting Option Bolt 51452557-003 Nut 51452559-004	56,9 N-M +/- 2,8 N-M (42.0 Lb-Ft +/- 2.1 Lb-Ft)	
Grade 660 NACE Bolts/NACE 304 Nuts Option Bolt 51452557-002 Nut 51452559-002		
Grade 660 NACE Bolting Option Bolt 51452557-002 Nut 51452559-008	67,8 N-M +/- 3,4 N-M (50.0 Lb-Ft +/- 2.5 Lb-Ft)	
Carbon Steel Bolting Option Bolt 51452557-001 Nut 51452559-001		

14.4 Replacing the Communication Module

The communication module includes a connector to the sensor ribbon cable and a connector to the optional display module. This section includes the procedure to replace the communication module.

The transmitter does not have to be removed from service to replace the comm module.

Please take appropriate steps to avoid ESD damage when handling the communication and display module assemblies.

Refer to Figure 63 for parts locations.

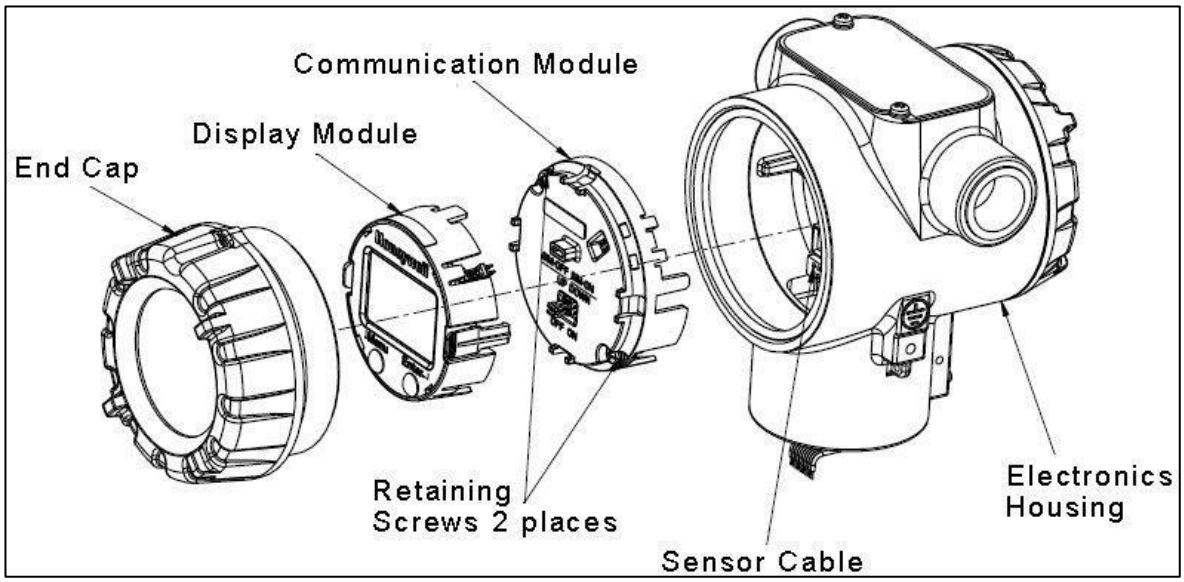

Figure 62 – ST 700 Basic Transmitter - PWA Replacement

1. Turn OFF transmitter power (Power removal is only required in accordance with area safety approvals. Power removal is only required in Class 1 Div 1 Explosion-proof and Class 1 Div 2 environments).
    - When removing the communications module with power applied, the loop will go to 0V. Likewise, installing a communications module into a transmitter with power applied will cause the loop output value to go to 12ma for several seconds then the loop output value will go to the configured value based on the PV input.
    - Installing a display module into a powered transmitter may cause a temporary upset to the loop output value.
2. Loosen the end cap lock and unscrew the end cap from the electronics side of the transmitter housing.
3. If equipped with a display module, carefully depress the two tabs on the sides of the display module and pull it off.

4. If necessary, unplug the interface connector from the communication module. **Do not discard the connector**.
5. Loosen the two retaining screws, and carefully pull the communication module from the Electronics compartment.
6. Carefully align and connect the Sensor Ribbon Cable to the connector “J4” at the bottom of the communication module. When installing the communication module in the next step, be careful not to pinch the Sensor Ribbon Cable.
7. Carefully, insert the communication module into the Electronics compartment. Ensure that the Sensor Ribbon Cable is not pinched.
8. Tighten the two communication module retaining screws.
9. Refer to the SmartLine User's Manual to change the FAILSAFE, READ/WRITE configuration settings.
10. If applicable, re-install the display module as follows:

    a. Orient the display as desired.

    b. Install the Interface connector in the display module such that it will mate with the socket for the display in the communication module.

    c. Carefully line up the display and snap it into place. Verify that the two tabs on the sides of the display latch.

Orient the display for proper viewing through the end cap window. You can rotate the meter mounting orientation in 90 ^{o} increments.

11. Apply Parker Super O-ring Lubricant or equivalent to the end cap O-ring before installing the end cap. Reinstall the End Cap and tighten the End Cap locking screw.
12. Installing Optional External Configuration Button Assembly.

    d. Loosen (Do Not Remove) both top nameplate screws and pivot nameplate 90°.

    e. Align the protrusion on the button assembly with the matching opening in the housing and snap the button assembly into the housing.

    f. Rotate the nameplate back to the original position and tighten the nameplate screws.

14.5 Replacing the Meter Body

You can replace the complete meter body, including the process heads, or the meter body only on certain Differential Pressure (DP), Gauge Pressure (GP), and Atmospheric Pressure (AP) transmitters by using the existing process head(s). Use the following procedure for meter body-only replacement.

1. Save or record device configuration data.
2. Turn off transmitter power.
3. Remove the transmitter from service and move it to a clean area before disassembling it.
4. Refer to Figure 64. Loosen the End Cap Lock and unscrew the End Cap from the electronics side of the transmitter housing.

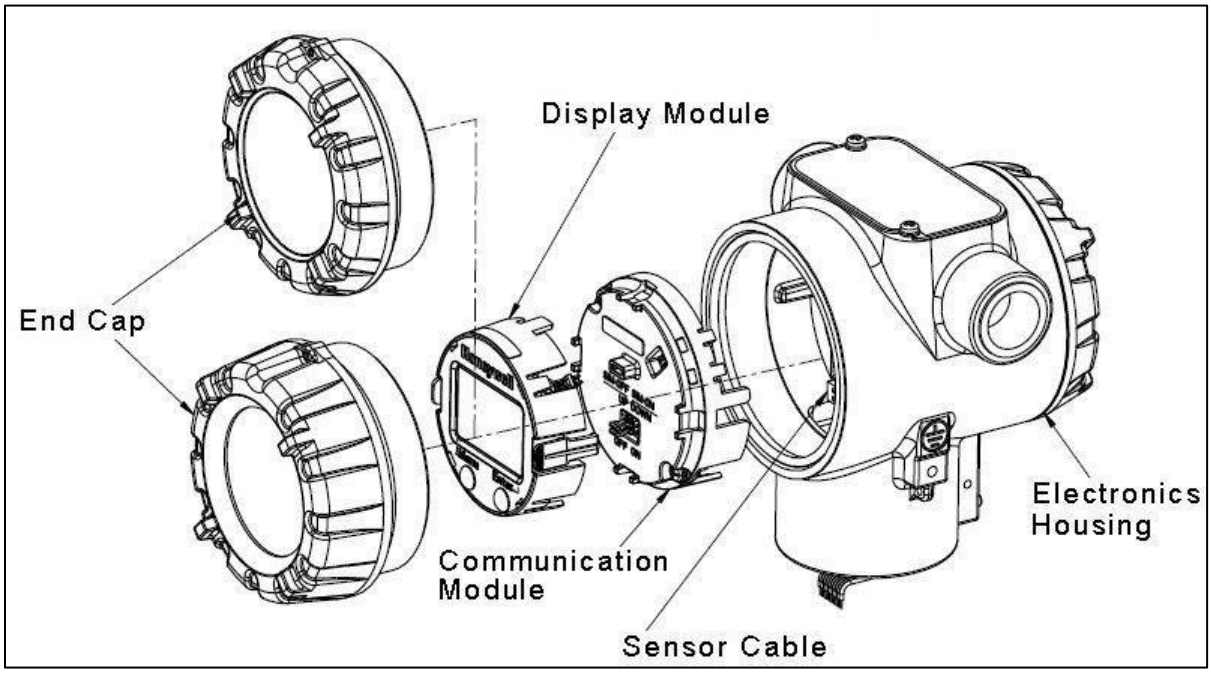

Figure 63 – ST 700 Basic Transmitter - Disassembly for Meter Body Replacement

Please take appropriate steps to avoid ESD damage when handling the communication and display module assemblies

5. If a display is present, press the two snaps along the side, and remove it from the communication module assembly.
   Note: Do not discard or misplace the display/communication connector, it will be required to reassemble the display module
6. Loosen the two retaining screws, and remove the communications module assembly, and remove the communication module assembly from the electronics housing.
7. Disconnect the Sensor Cable from the communications Board.
8. Refer to Figure 66. Use a 2mm hex wrench to completely loosen the set screw on the outside of the housing to permit rotating the meter body.

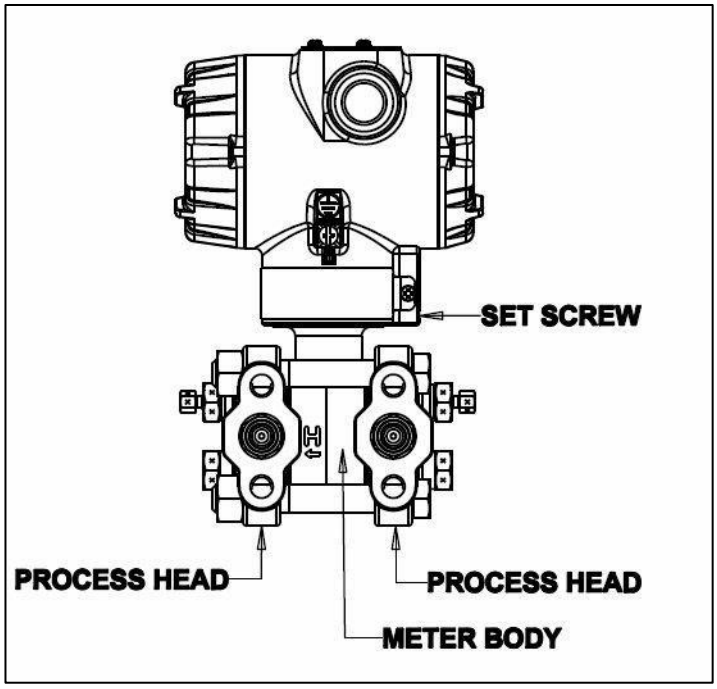

Figure 64 – ST 700 Basic Transmitter - Hardware Location to Remove the Meter Assembly

9. Carefully turn the complete meter body counterclockwise to unscrew it from the electronics housing.
10. Remove the nuts from bolts that hold the process head(s) to the meter body.
11. Remove process heads and bolts.
12. Remove the gaskets or O-rings from the process heads.
13. Clean the interior of the process head(s) with a soft bristle brush and suitable solvent.

CAUTION: To prevent damage to the diaphragm in the meter body, use extreme care when handling or placing the meter body on any surface. Carefully assemble gaskets or O-rings to the meter body. If installing O-rings, lubricate with water or leave dry.

14. Coat threads on process head bolts with anti-seize compound such as “Neverseize” or equivalent.
15. Refer to Figure 66. Apply Dow Corning #33 silicone grease to the meter body adapter O-ring and carefully assemble the O-ring to the meter body. Assemble the process head(s) and bolts to the new meter body. For now, make the bolts only finger-tight.

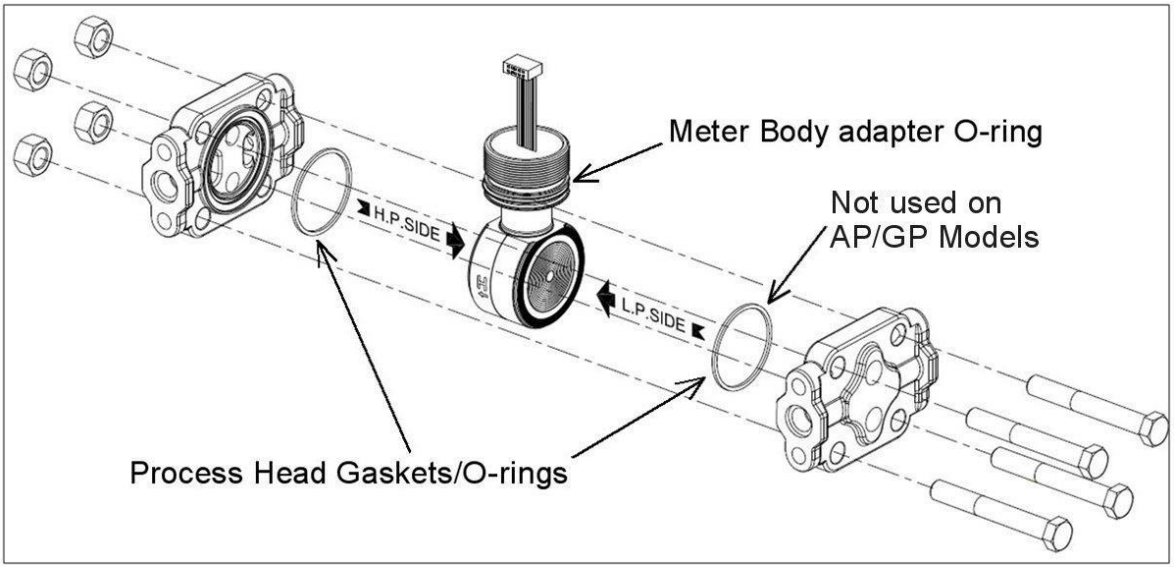

Figure 65 – ST 700 Basic Transmitter - Meter Body Reassembly

16. Use a torque wrench to gradually tighten nuts to torque rating in sequence shown in Figure 67. Tighten head bolts in stages of 1/3 full torque, 2/3 full torque, and then full torque as per Table 46.

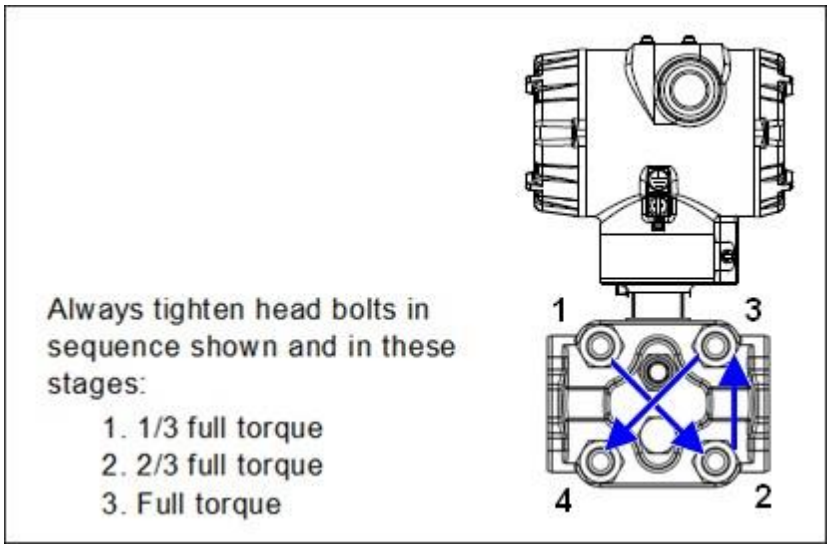

Figure 66 – ST 700 Basic Transmitter - Head Bolt Tightening Sequence

17. Feed the ribbon cable on the new meter body through the neck of the housing.

CAUTION: To prevent damage to the ribbon cable, use care when assembling the meter body to the electronics housing.

18. Screw the new meter body into the housing until the bottom of the meter body adapter is flush with the neck of the electronics housing.
19. Tighten the outside set screw to be sure it is fully seated in the slot in the header.
20. Loosen the set screw ½- turn.

21. Rotate the housing to the desired position (Max. 180º in either direction), and tighten the set screw.
22. Carefully align and connect the Sensor Ribbon Cable to connector "J4" at the bottom of the communication module board. When installing the communication module in the next step, be careful not to pinch the Sensor Ribbon Cable.
23. Carefully, insert the communication module into the Electronics compartment. Ensure that the Sensor Ribbon Cable is not pinched.
24. Tighten the two communication module retaining screws.
25. If applicable, re-install the display module as follows:
    a. Orient the display as desired.
    b. Install the Interface connector in the display module such that it will mate with the socket for the display in the communication module.
    c. Carefully line up the display, and snap it into place. Verify that the two tabs on the sides of the display latch.

Orient the display for proper viewing through the end cap window.
You can rotate the meter mounting orientation in 90 o increments.

26. Connect the bracket to the transmitter housing.
27. Recalibrate the transmitter per section Calibration – ST 700 Basic Transmitter, of this document.
28. Return the transmitter to service, and turn ON power.
29. Verify the transmitter configuration data. Restore the saved database if necessary.
30. Lubricate the end-cap O-ring with Parker Super O-ring silicone lubricant or equivalent before replacing the end caps.

15 Calibration – ST 700 Basic Transmitter

15.1 Recommendations for Transmitter Calibration

The ST 700 basic transmitter does not require periodic calibration to maintain accuracy. Typically, calibration of a process-connected transmitter will degrade, rather than augment the capability of a smart transmitter. For this reason, it is recommended that a transmitter be removed from service before calibration. Moreover, calibration will be accomplished in a controlled, laboratory-type environment, using certified precision equipment.

15.2 Calibration Procedures

For a transmitter operating in analog mode, you must calibrate its output signal measurement range using any compatible hand-held communicator or a local display.

Calibration information and procedures for a transmitter operating in the HART/DE mode are provided in the *ST 700 Series HART/DE Option User's Manual*, Document # 34-25-25-47.

16 Troubleshooting – ST 700 Basic Transmitter

16.1 Overview

Troubleshooting involves responding to error messages, primarily displayed by the Honeywell Versatilis Configurator. Error messages that may occur on the transmitter's local display are fairly self-explanatory and intuitive. However, this section covers the diagnostic messages that indicate critical conditions. Other than the critical conditions, additional detail is not provided. If you require assistance, contact your distributor or Honeywell Technical Support. All other messages are covered in the Honeywell Versatilis Configurator User Manual.

16.2 Critical Diagnostics Screens

The standard display will display the fault message on the top line of the LCD .

16.2.1 Fault Conditions and Recommended Corrective Actions – Standard Display

The standard display will display the message FAULT on the top line of the LCD and the appropriate diagnostic text on the lower line.

Table 47 – ST 700 Basic Transmitter - Fault Conditions and Recommended Corrective Actions.

Condtion	Analysis	Recommended Corrective Action
Mbd Com (Meter body comm fault)	Communications between the meter body and the electronics module has failed.	Check the ribbon cable that connects the meter body to the electronics module. Ensure that the cable is securely plugged into the electronics module. Ensure that all pins are plugged into the connector (e.g. ensure that the connector is not offset in a way that leaves some pins unconnected). Cycle power to the transmitter. If the problem continues to occur replace the electronics module. If this does not fix the problem, replace the meter body.
Comm El (Communication Board fault)	A critical failure has been detected on the HART electronics module.	Cycle power to the transmitter. If the problem continues to occur replace the electronics module.
Mtrbody (Sensor Board Fault)	A critical failure has been detected in the Meter body.	Cycle power to the transmitter. If the problem continues to occur replace the electronics module.

17 Parts List – ST 700 Basic Transmitter

17.1 Overview

Individually saleable parts for the various transmitter models are listed in this section. Some parts are illustrated for identification. Parts are identified and listed in the corresponding tables as follows:

- Individually saleable parts are indicated in each figure by key number callout.
- Parts that are supplied in kits are indicated in each illustration by key number callout with the letter K prefix.

Table 48 is a list of recommended spare parts.

Table 48 – ST 700 Basic Transmitter - Summary List of Recommended Spare Parts

Part Number	Description	Figure No.	Key No.	1-10 Units	10-100 Units	100-1000 Units
Electronics Assembly						
50129828-501 50129828-502	HART Comm Assembly without external 2 button support HART Comm Assembly with external 2 button support	Figure 69	5	1	1-2	2-4
51452865-501 51452865-502 51452865-503 51462865-504	Meter Body Seal kit (includes O-rings) Glass Filled PTFE VITON 100% PTFE GRAPHITE	Figure 72	K1	1	1-2	2-4
50129832-501 50129832-502	HART Terminal Block Assy Without Lightning Protection HART Terminal Block Assy With Lightning Protection	Figure 70	3	1	1-2	2-4

Process head gasket kit		Figure No.	Key No.	1-10 Units	10-100 Units	100-1000 Units
51452868-501	Gasket only, Process Head (12 PTFE packs)	Figure 72	Ka	12	12-24	24-48
51452868-502	Gasket only, Process Head (6 Viton Head O'Rings)			6	6-12	12-24
51452868-507	Gasket only, Process Head Graphite Gasket (replacement only for existing graphite gasket)			6	6-12	12-24
Meter Body						
Specify complete model number from name plate	DP Models GP/AP HEAD Models LGP/LAP Models Flush Mount Models Flange Mount Models	Figure 71		1	1-2	2-4

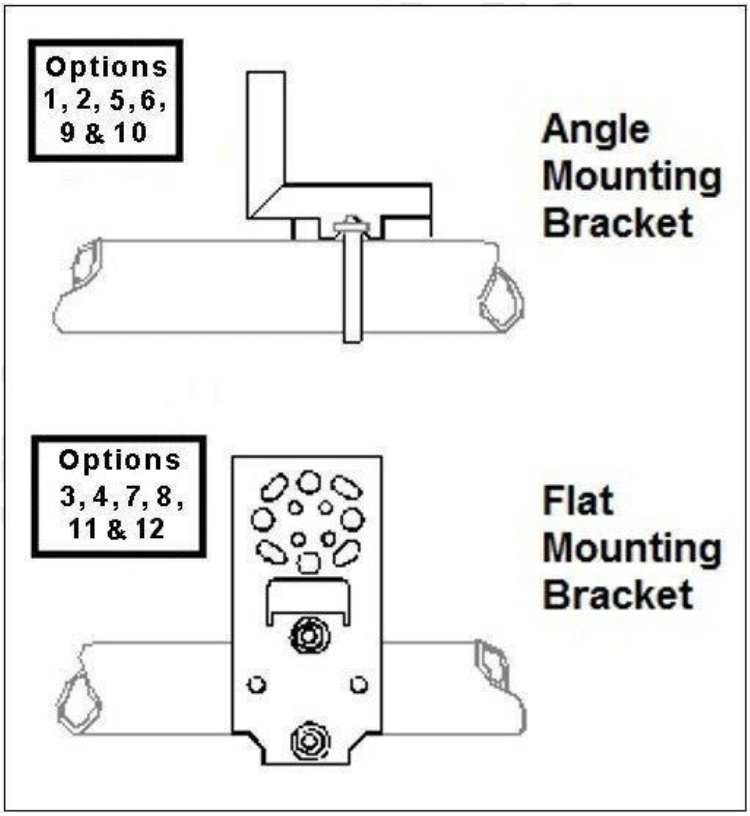

Figure 67 – ST 700 Basic Transmitter - Angle and Flat Bracket Parts

(refer to Table 53)

Table 49 – ST 700 Basic Transmitter - Angle and Flat Bracket Parts

(Refer to Figure 69)

Key No.	Part Number	Description	Quantity Per Unit
1	50132311-511	Carbon Steel Angle Bracket for all models **except** In-line and flush mount transmitters (CHINA MARKET ONLY).	1
2	50132311-521	Carbon Steel Angle Bracket for all In-line and flush mount transmitters (CHINA MARKET ONLY).	1
3	51196557-501	Carbon Steel Flat Bracket Mounting kit for all models **except** In-line and flush mount transmitters.	1
4	51196557-502	Carbon Steel Flat Bracket Mounting kit for all In-line transmitters and flush mount transmitters.	1
5	30752770-603	SS 304 Angle Bracket Mounting kit for all models **except** In-line and flush mount transmitters.	1
6	30752770-604	SS 304 Angle Bracket Mounting kit for all In-Line and flush mount transmitters.	1
7	51196557-505	SS 304 Flat Bracket Mounting kit for all models **except** In-line and flush mount transmitters.	1
8	51196557-506	SS 304 Flat Bracket Mounting kit for all In-line transmitters and flush mount transmitters.	1
9	50132311-513	SS 316 Angle Bracket Mounting kit for all In-line transmitters and flush mount transmitters (CHINA MARKET ONLY).	1
10	50132311-523	SS 316 Angle Bracket Mounting kit for all models **except** In-line and flush mount transmitters (CHINA MARKET ONLY).	1
11	51196557-508	SS 316 Flat Bracket Mounting kit for all In-line transmitters **except** In-Line and flush mount transmitters.	1
12	51196557-509	SS 316 Flat Bracket Mounting kit for all In-Line and flush mount transmitters.	1

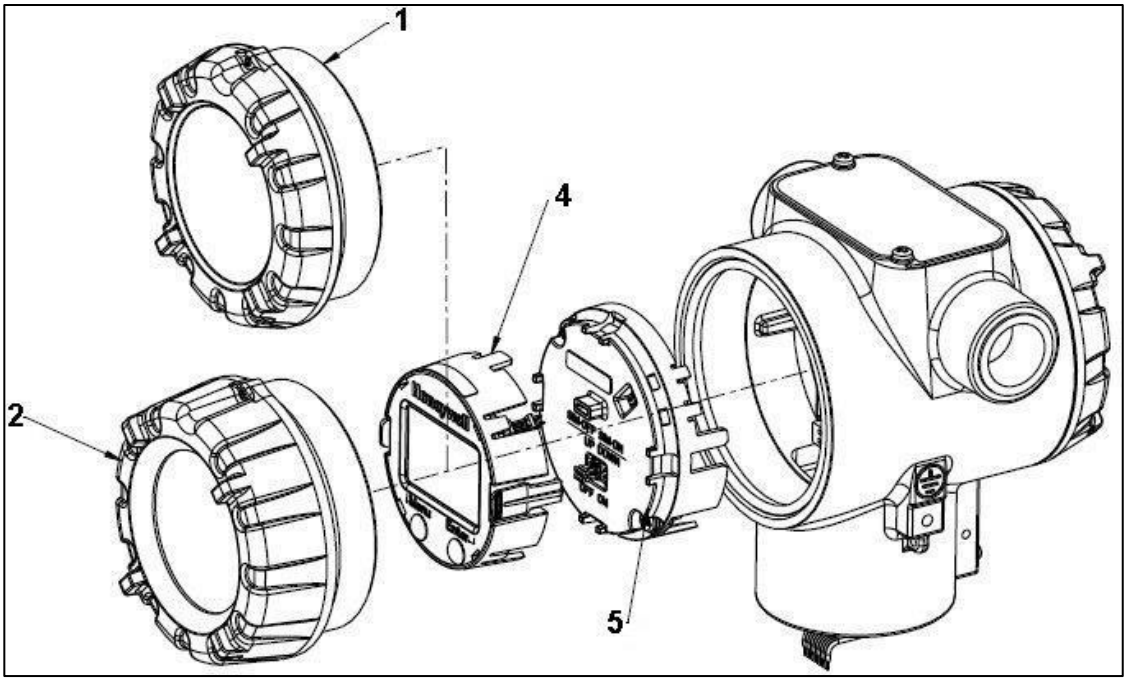

Figure 68 – ST 700 Basic Transmitter - Electronic Housing, Display End

Table 50 – ST 700 Basic Transmitter - Major Assemblies

(Refer to Figure 68, 69 and 71)

Key No.	Part Number	Description	Quantity Per Unit
1	50049858-501 50049858-521	End Cap (Aluminum) End Cap (Stainless Steel)	1
2	50049832-501 50049832-521	End Cap, Display (Aluminium) with window End Cap, Display (Stainless Steel) with window	1
3	50129832-501 50129832-502	Terminal Assy HART without Lightning protection Terminal Assy HART with Lightning protection	1
4	50049911-501 50126003-501	Basic Display Standard Display	1
5	50129828-501 50129828-502	HART Electronics Module Assembly (PWA) without MR sensor HART Electronics Module Assembly (PWA) with MR sensor	1
6	50131077-501	External Zero, Span & Config Buttons (2- button Assembly)	1
K1	30757503-005	Electronics housing seals kit (includes O-rings)	2

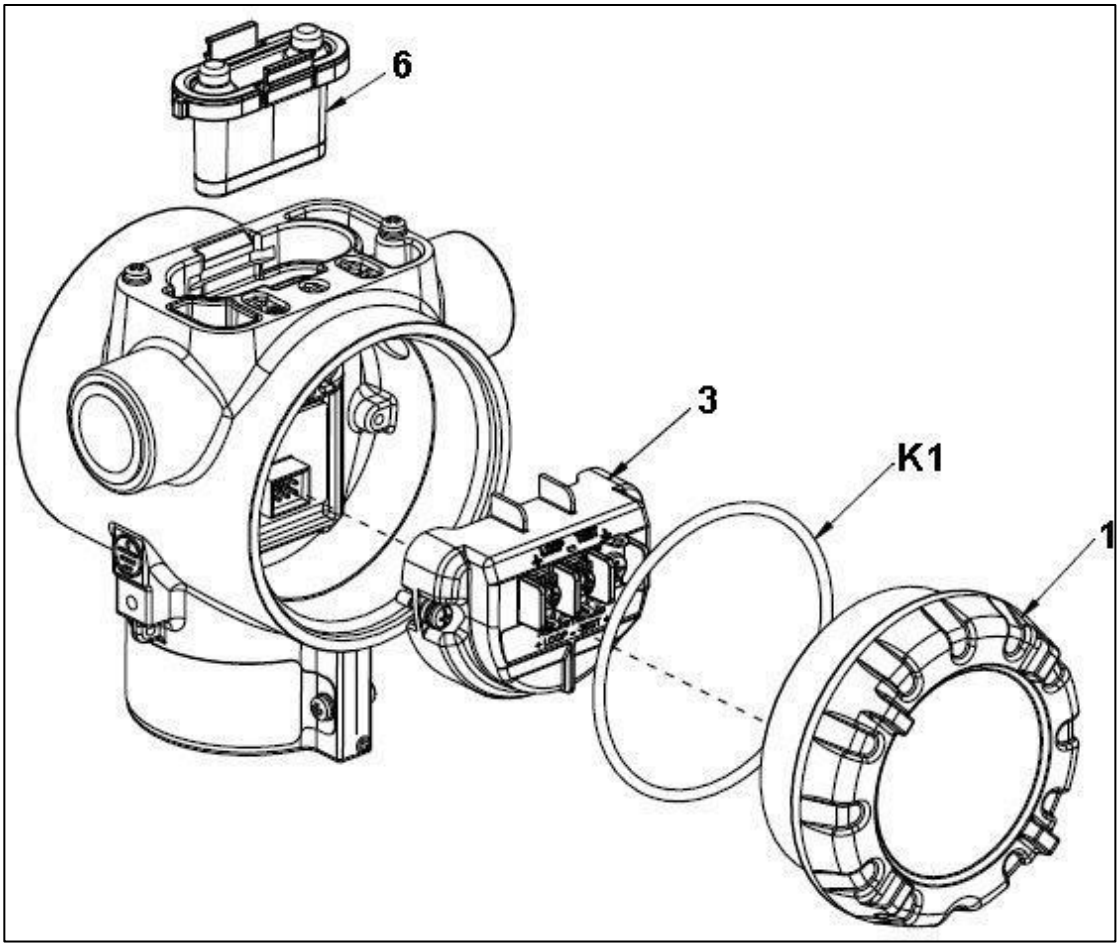

Figure 69 – ST 700 Basic Transmitter – Electronic Housing, Terminal Block End

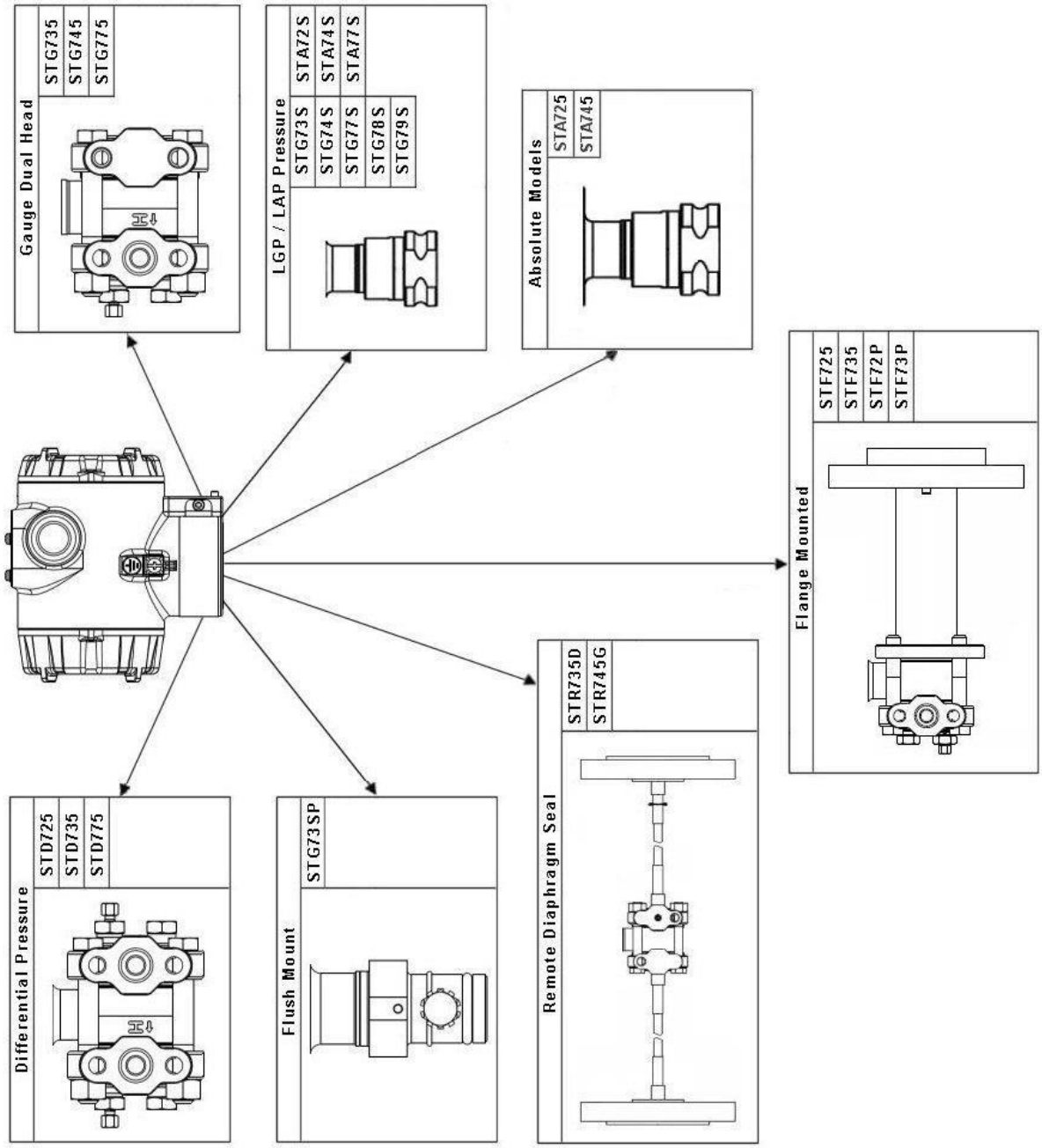

Figure 70 – ST 700 Basic Transmitter - Major Assemblies

Table 51 – ST 700 Basic Transmitter STG735, 745, 775, STD 725, 735, 775 & STA725 & 745, Transmitter Body.

(Refer to Figure 71)

Key No.	Part Number	Description	Qty/ Kit
		Meter Body Gasket Kits	
	51452865-501 51452865-502 51452865-503 51452865-504	Glass Filled PTFE VITON 100% PTFE GRAPHITE	
Each Meter Body Gasket Kit includes:			
K6		Gasket, Process Head (6 Gaskets/ 1 Kit)	6
Ka		Gasket, Flange Adapter (6 Gaskets/ 1 Kit)	6
K7		O-Ring, Meter Body to Electronics Housing (3 Gaskets/ 1 Kit)	3
		K7 Process Head Gasket Kits	
K6 K6 K6	51452868-501 51452868-502 51452868-507	Gasket only, Process Head (12 PTFE Gaskets/pack) Gasket only, Process Head (6 Viton Head O-Rings) Gasket only, Process Head Graphite Gasket (use only as replacement of existing graphite gasket)	12 6 6
		Flange Adapter Gasket Kits	
Ka Ka Ka	51452868-504 51452868-505 51452868-508	Gasket only, Flange Adapter, 6 PTFE Adapter Gaskets Gasket only, Flange Adapter, 6 VITON Adapter O-Rings Gasket only, Flange Adapter Graphite Gasket (use only as replacement of existing graphite gasket)	6 6 6
		½-inch NPT Flange Adapter Kits	
	51452867-110 51452867-210 51452867-310 51452867-410 51452867-150 51452867-350 51452867-130 51452867-330	Flange Adapter Kit, with: SS Flange Adapters and with carbon steel bolts SS Flange Adapters and with A286 SS (NACE) bolts SS Flange Adapters and with 316 SS (non-NACE) bolts SS Flange Adapters and with B7M alloy steel bolts Monel Flange Adapters and with carbon steel bolts Monel Flange Adapters and with 316 SS (non-NACE) bolts Hastelloy C Flange Adapters and with carbon steel bolts Hastelloy C Flange Adapters and with 316 SS (non-NACE) bolts	
		Each ½-inch NPT Flange Adapter Kit includes:	
Ka		Gasket, Flange Adapter	2
Kb		½-inch NPT Flange Adapter	2
Kc		Bolt, hex head, 7/16-20 UNF, 1.50 inches long	4

Key No.	Part Number	Description	Qty/ Kit
Bolt And Nut Kit			
	51452866-501	Carbon steel bolt and Nut Kit	
	51452866-502	Stainless Steel Bolt and Nut Kit with NACE Certificate	
	51452866-503	Stainless Steel Bolt and Nut Kit without NACE Certificate	
	51452866-504	B7M Bolt and Nut Kit	
	51452866-505	All Stainless Steel NACE Bolt and Nut Kit	
	51452866-506	Monel Bolt and Nut Kit	
	51452866-507	Super Duplex Bolt and Nut Kit	
	51452866-508	Stainless Steel NACE 6K Bolt and Nut Kit	
Each Bolt and Nut Kit Includes:			
K8		Head Bolt	4
K4		Head Nut	4
Kc		Adapter Bolt	4

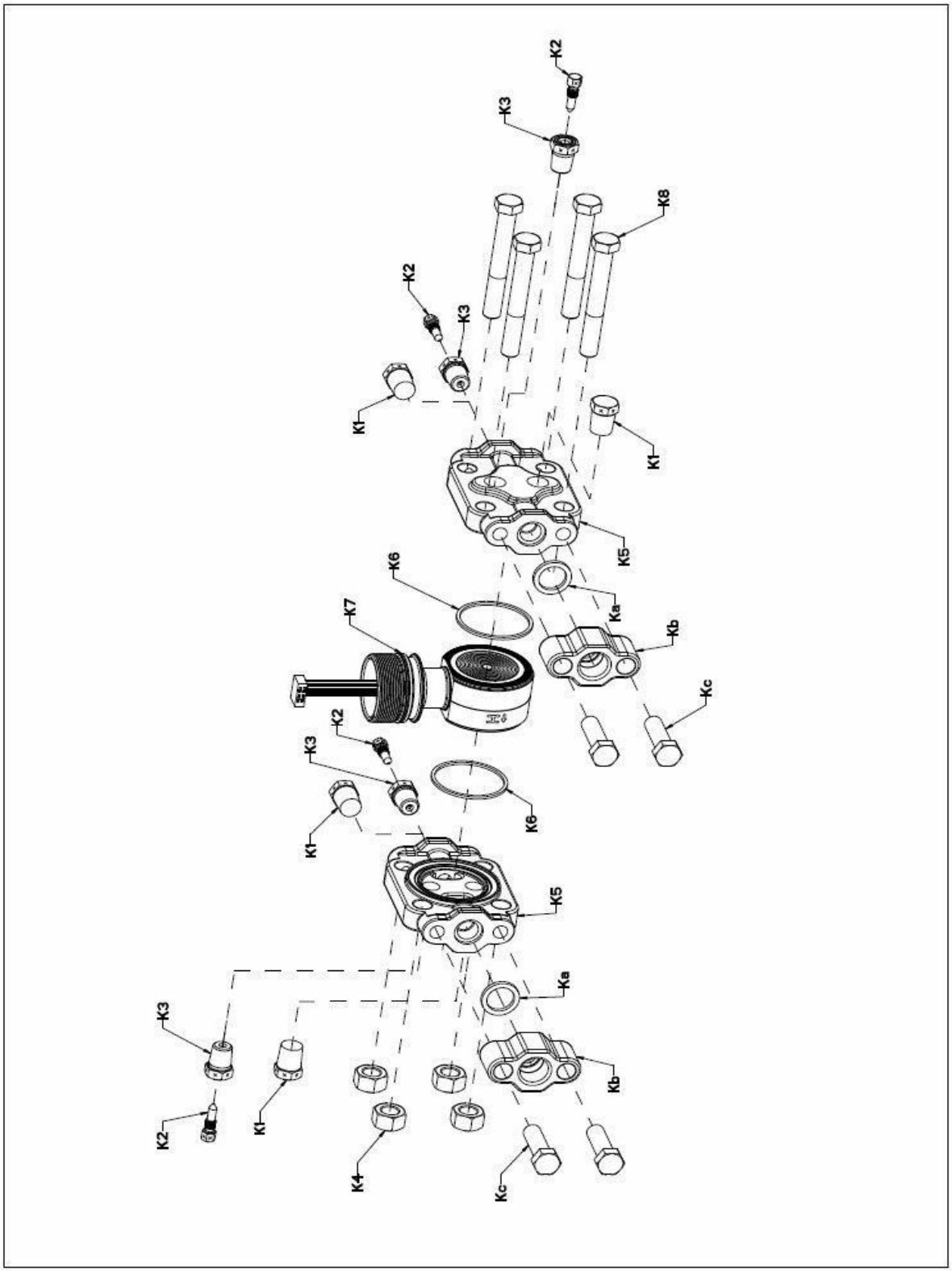

Figure 71 - ST 700 Basic Transmitter Models STD725, 735, 775

Table 52– ST 700 Basic Transmitter – Parts for STG725, 735, 745, 775, 745 Transmitter Body

(Refer to Figure 72)

Key No.	Part Number	Description	Qty/Unit
Process Head Assembly Kits with PTFE Gaskets			
	51452864-010 51452864-012 51452864-020 51452864-022 51452864-030 51452864-032	Carbon steel head (zinc plated) without side vent/drain Carbon steel head (zinc plated) with side vent/drain Stainless steel head without side vent/drain Stainless steel head with side vent/drain Hastelloy C head without side vent/drain Hastelloy C head with side vent/drain	
Process Head Assembly Kits with Viton® or Fluorocarbon Elastomer Gaskets			
	51452864-110 51452864-112 51452864-120 51452864-122 51452864-130 51452864-132	Carbon steel head (zinc plated) without side vent/drain Carbon steel head (zinc plated) with side vent/drain Stainless steel head without side vent/drain Stainless steel head with side vent/drain Hastelloy C head without side vent/drain Hastelloy C head with side vent/drain	
Each process head assembly kit includes:			
K1		Pipe Plug (See notes 1 & 2)	1
K2		Vent Plug (See note 1)	1
K3		Vent Bushing (See note 1.)	1
K5		Process Head	1
K6		Gasket (PTFE), Process Head	1
Ka		Gasket (PTFE), Flange Adapter	1
	Notes		
	Note 1: This item is made of the same material as the process head s, except for Kits with carbon steel process head s, which include stainless steel Pipe Plug, Vent Plug, and Vent Bushing. Note 2: The Kit for process head s without side vent/drain does not include Pipe Plugs (K1).		
Reference Head			
K9	51452951-502	316 SS Blind Reference Head	1

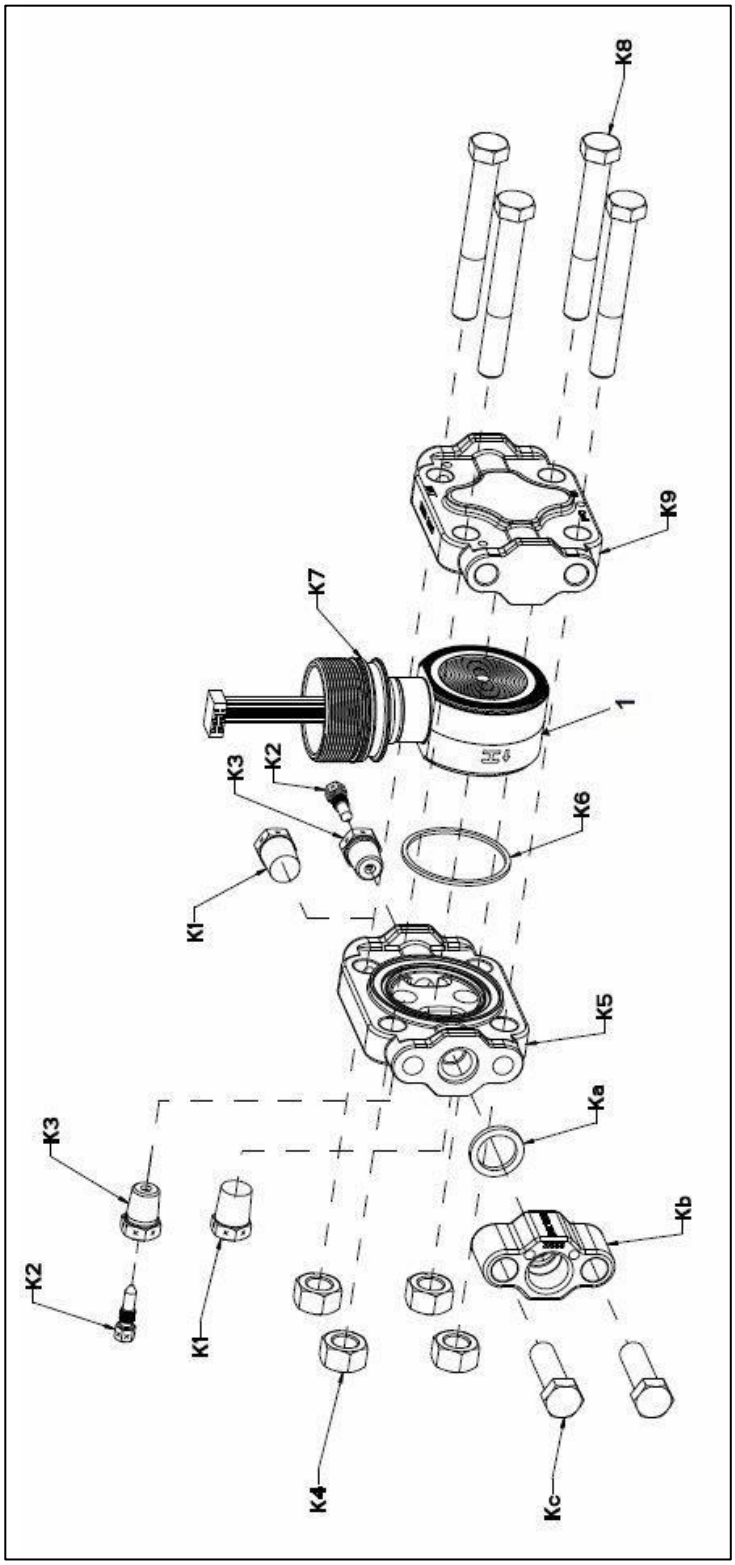

Figure 72 – ST 700 Basic Transmitter - STG735, 745, 775 and STA725, 745 Transmitter Body

Table 53 - ST 700 Basic Transmitter – Inline Gauge and Inline Atmospheric Meter Body Parts

(Refer to Figure 73)

Key No.	Part Number	Description	Qty/Unit
	Specify complete model number from nameplate	ST Series replacement meter body (LAP/LGP model)	1

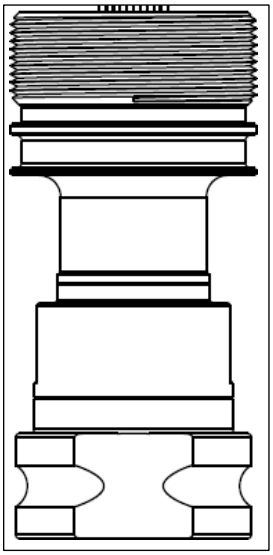

Figure 73 – ST 700 Basic Transmitter - Inline Gauge and Inline Atmospheric Meter Body Bodies

Table 54 – ST 700 Basic Transmitter - Flange-Mounted Meter Body Parts

(Refer to Figure 74 and Figure 75)

Key No.	Part Number	Description	Qty/Unit
1	Specify complete model number from nameplate	ST Series 700 replacement meter body	1

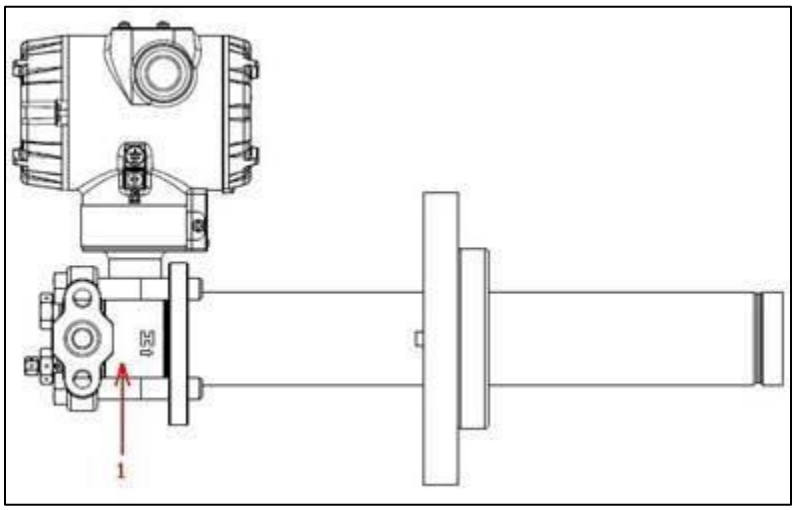

Figure 74 – ST 700 Basic Transmitter - Extended Flange Design

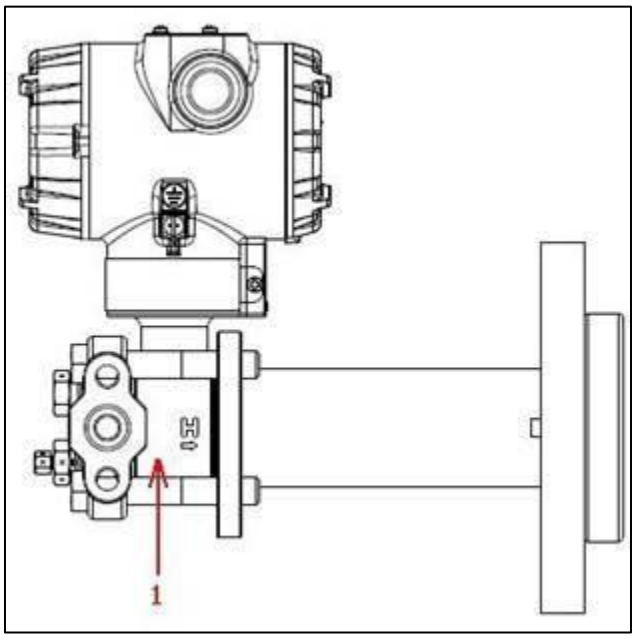

Figure 75 - ST 700 Basic Transmitter - Flush Flange Design

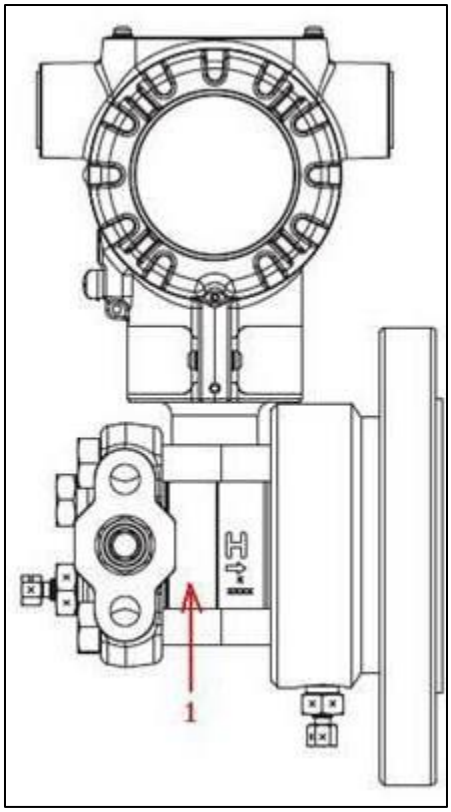

Figure 76 – ST 700 Basic Transmitter - Pseudo Flange Design

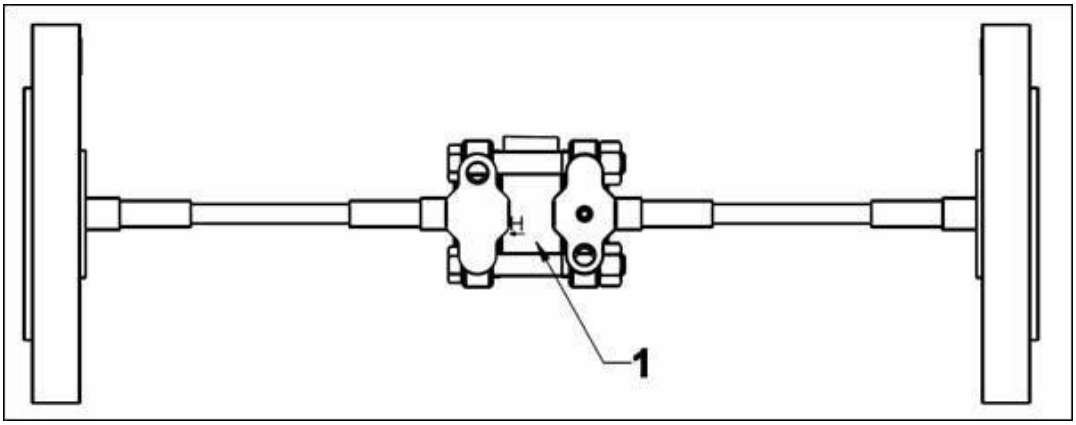

Figure 77 – ST 700 Basic Transmitter - Remote Seal Diaphragm

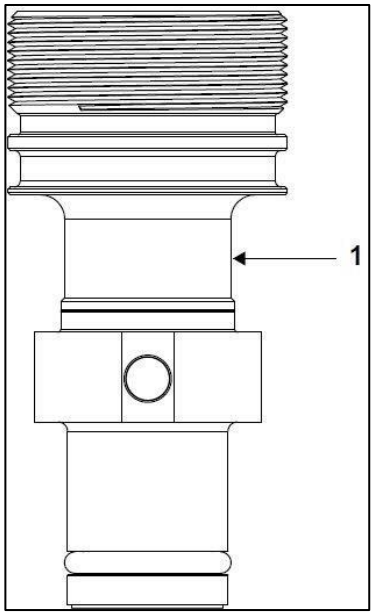

Figure 78 - ST 700 Basic Transmitter - Series 700 Flush Mount Meter Body.

Table 55 – ST 700 Basic Transmitter - Flush Mount Meter Body Parts

(Refer to Figure 78**)**

Key No.	Part Number	Description	Qty/Unit
1	Specify complete model number from nameplate	Replacement meter body (flush Mount model)	1
	30756445-508	Gasket Kit (0-rings)	
	51204496-501	316L SS Mounting Sleeve Kit	
	51204497-501	Calibration Sleeve Kit	

Appendix A - PRODUCT CERTIFICATIONS for the ST 700 Standard and Basic Transmitter

A.1 Safety Instrumented Systems (SIS) Installations

For Safety Certified Installations, please refer to the ST 800 and ST 700 Safety Manual 34-ST-25-37 for installation procedure and system requirements.

SIL 2/3 Certification	IEC 61508 SIL 2 for non-redundant use and SIL 3 for redundant use under the following standards: IEC61508-1: 2010; IEC 61508-2: 2010; IEC61508-3: 2010.

A.2 European Directive Information (CE Mark)

CE

Honeywell

50080030
Revision: S

EU DECLARATION OF CONFORMITY

We,
Honeywell International Inc.
Honeywell Field Solutions
512 Virginia Drive
Fort Washington, PA 19034 USA

declare under our sole responsibility that the following products,

ST 800 – Smart Series Pressure Transmitter
And
ST 700- Smart Series Pressure Transmitter

to which this declaration relates, is in conformity with the provisions of the European Community Directives, including the latest amendments, as shown in the attached schedule.

Assumption of conformity is based on the application of the harmonized standards and when applicable or required, a European Community notified body certification, as shown in the attached schedule.

The authorized signatory to this declaration, on behalf of the manufacturer, and the Responsible Person is identified below.

Owen J. Murphy
Product Safety & Approvals Engineering
Issue Date: 17 July 2018
Fort Washington, PA 19034, USA

Honeywell

SCHEDULE
50080030
Revision: S

EMC Directive (2014/30/EU)

EN 61326-1:2013	Electrical Equipment for Measurement, Control and Laboratory Use – EMC Requirements.
IEC 61326-3-1:2008	Electrical Equipment for Measurement, Control and Laboratory Use- Part 3-1: Immunity Requirements for safety related systems and equipment intended to perform safety-related functions.

Summary of Tests Performed:

PORT	TEST	STANDARD	CRITERIA (IEC 61326-1)	CRITERIA (IEC 61326-3-1)	RESULTS
Enclosure	Radiated Emission	CISPR 11	Group1, Class A 30 – 230 MHz: 40 dB 230 – 1000 MHz: 47 dB	Group1, Class A 30 – 230 MHz: 40 dB 230 – 1000 MHz: 47 dB	PASS
	ESD Immunity	IEC61000-4-2	+/- 4KV Contact +/- 8KV Air	+/- 6KV Contact +/- 8KV Air	PASS
	EM Field- RF Radiated Susceptibility	IEC61000-4-3	10 V/m- 80 MHz to 1GHz 3 V/m - 1.4 GHz to 2.0 GHz 1 V/m- 2.0 GHz to 2.7 GHz	20 V/m- 80MHz to 1GHz 10 V/m - 1.4GHz to 2.0 GHz 3 V/m- 2.0GHz to 2.7GHz	PASS PASS PASS
	50Hz/60Hz Magnetic Field Immunity	IEC 6100-4-8	30 A/m	30 A/m	N/A 1
DC Power	EFT(B) Immunity	IEC61000-4-4	+/- 1KV	+/- 2KV	PASS
	Surge Immunity	IEC61000-4-5	+/- 1KV	+/- 2KV	PASS
	RF Conducted Susceptibility	IEC61000-4-6	3V	3 V Except the following: 10 V 3.39 to 3.410MHz 10 V 6.765 to 6.795MHz 10 V 13.553 to 13.567MHz 10 V 26.957 to 27.283MHz 10 V 40.66 to 40.70MHz	PASS
I/O Signal/ Control (Including Earth Lines)	EFT(Burst) Immunity	IEC61000-4-4	+/- 1KV	+/- 2KV	2
	Surge Immunity	IEC61000-4-5	+/- 1KV	+/- 2KV	2
	RF Conducted Susceptibility	IEC61000-4-6	3V	3 V Except the following: 10 V 3.39 to 3.410MHz	2

2 of 6

Honeywell

SCHEDULE
50080030
Revision: S

PORT	TEST	STANDARD	CRITERIA (IEC 61326-1)	CRITERIA (IEC 61326-3-1)	RESULTS
				10 V 6.765 to 6.795MHz 10 V 13.553 to 13.567MHz 10 V 26.957 to 27.283MHz 10 V 40.66 to 40.70MHz	
AC Power	Voltage Dip	IEC61000-4-11	0% during 1 Cycle 40% during 10-12 Cycles 70% during 25-30 Cycles		N/A[3]
	Short Interruptions	IEC61000-4-11	0% during 250-300 Cycles		N/A[3]
	EFT(Burst) Immunity	IEC61000-4-4	2KV		N/A[3]
	Surge Immunity	IEC61000-4-5	1KV/ 2KV		N/A[3]
	RF Conducted Susceptibility	IEC61000-4-6	3V		N/A[3]

1. There is no magnetic sensitive circuitry.
2. Done as part of the DC Power Testing.
3. Product is DC Powered.

3 of 6

SCHEDULE
50080030
Revision: S

ATEX Directive (2014/34/EU)

EU-Type Examination Certificate No: Sira12ATEX2233X Protection : Intrinsically Safe, Flameproof and Dust

Equipment Group II Category 1 G

Ex ia IIC T4 Ga
Ex ic IIC T4 Gc
FISCO Field Device
Ta= -50°C TO +70°C

Equipment Group II Category 1/ 2 G and Group II Category 2 D

Ex db IIC T6..T4 Ga/Gb
Ta: -50°C to +65°C for T6
Ta: -50°C to +85°C for T5...T4

Ex tb IIIC T95°C T120°C Db
Ta: -50°C to +65°C for T110°C...T120°C
Ta: -50°C to +85°C for T95°C...T110°C

Standards:

EN 60079-0: 2012+A11 : 2013 EN 60079-1: 2014 EN 60079-11: 2012
EN 60079-26: 2015 EN 60079-31: 2009

Type Examination Certificate No: Sira12ATEX4234X Protection : Increase Safety, Intrinsic Safety Category 3

Equipment Group II Category 3 G

Ex ec IIC T4 Gc
Ta= -50°C TO +85°C

Ex ic IIC T4 Gc
Ex ic IIC T4 Gc
FISCO Field Device
Ta= -50°C TO +85°C

Standards:

EN 60079-0: 2012+A11 : 2013 EN 60079-11: 2012 EN 60079-7: 2015

ATEX Notified Body for EC Type Certificates

Sira Certifcation Service [Notified Body Number: 0518]
Unit 6, Hawarden Industrial Park,
Hawarden, CH5 3US
United Kingdom

ATEX Notified Body for Quality Assurance

DEKRA Certification B.V. [Notified Body Number: 0344]
Meander 1051
6825 MJ Arnhem
The Netherlands

Honeywell

SCHEDULE
50080030
Revision: S

Pressure Equipment Directive (PED) (2014/68/EU)

ASME Boiler and Pressure Vessel Code Section VIII 'Rules for Construction of Pressure Vessels: 2000

Pressure Transmitter	PED Module
Absolute Pressure	
STA822/ STA722/ STA725	Sound Engineering Practice (SEP)
STA 82L/ STA72L/ STA72S	
STA 840/ STA740/ STA745	
STA 84L/ STA74L/ STA74S	
STA87L/ STA77L/ STA77S	Module A
Differential Pressure	
STD 810	Module A
STD820/ STD720/ STD725	
STD825	
STD830/ STD730/ STD735	
STD870/ STD770/ STD775	
Gauge Pressure	
STG830/ STG730/ STG735	Sound Engineering Practice (SEP)
STG840/ STG740/ STG745	
STG83L/ STG73L/ STG73S	
STG84L/ STG74L/ STG74S	
STG870/ STG770/ STG775	Module A
STG87L/ STG77L/ STG77S	
STG88L/ STG78L/ STG78S	
STG89L/ STG79L/ STG79S	
Flange Mounted	
STF828/ STF728/ STF725	Sound Engineering Practice (SEP)
STF832/ STF732/ STF735	
STF82F/ STF72F/ STF72P	
STF83F/ STF73F/ STF72P	
Remote Diaphragm	
STR82D/ STR73D/ STR735D	Sound Engineering Practice (SEP)
STR83D	
STR84G/ STR74G/ STR745G	
STR87G	
STR84A	

5 of 6

Honeywell

SCHEDULE
50080030
Revision: S

Measuring Instruments Directive (MID) (2014/32/EU)

NMI Evaluation Certificate: TC8395

Liquid Applications

Model	Range
STA 84L	1 Bar to 35 Bara
STA87L	1 Bar to 100 Bara
STG 84L	1 Bar to 35 Barg
STG87L	1 Bar to 100 Barg
STD 820	0 Bar to 1Barg
STD830	0 Bar to 7 Barg
STD870	0 Bar to 100 Barg

Gas Applications

Model	Range
STA 84L	0.9 Bara to 6 Bara
	1.75 Bara to 35 Bara
STA87L	20 Bara to 100 Bara
STG 84L	1.75 Barg to 35 Barg
STG87L	5 Barg to 100 Barg
STD 820	0 Bar to 1Bar
STD830	1.5 Bar to 7 Bar
STD870	0 Bar to 100 Bar

WELMEC Guide 8.8 OIML R117-1: 2007(E) EN 12405-1:2005+A2: 2010

MID Notified Body for Parts Certificates

NMi Certin B.V.
Hugo de Grootplein 1
3300 AJ Dordrecht
The Netherlands

6 of 6

A3. Hazardous Area Certifications

MSG CODE	AGENCY	TYPE OF PROTECTION	COMM. OPTION	ELECTRICAL PARAMETERS	AMBIENT TEMP (Ta)
A	FM Approvals™ USA	**Explosionproof:** Class I, Division 1, Groups A, B, C, D; Dust Ignition Proof: Class II, III, Division 1, Groups E, F, G; T6..T5 Class l, Zone 0/1, AEx db IIC T6..T5 Ga/Gb Class ll, Zone 21, AEx tb IIIC T95º Db	All	Note 1	T5: -50 ºC to 85ºC T6: -50 ºC to 65ºC
		Intrinsically Safe: Class I, II, III, Division 1, Groups A, B, C, D, E, F, G: T4 Class l, Zone 0, AEx ia IIC T4 Ga FISCO Field Device (Only for FF Option) Ex ia IIC T4 Ga; Ex ic IIC T4 Gc	4-20 mA / DE/ HART	Note 2a	-50 ºC to 70ºC
			Foundation Fieldbus	Note 2b	-50 ºC to 70ºC
		Nonincendive: Class I, Division 2, Groups A, B, C, D locations, T4 Class l, Zone 2, AEx nA IIC T4 Gc	4-20 mA / DE/ HART/ Foundation Fieldbus	Note 1	-50 ºC to 85ºC
		Enclosure: Type 4X/ IP66/ IP67	All	All	-
		STANDARDS: FM Class 3600:2011; FM Class 3610: 2010; FM Class 3611: 2004; FM Class 3615: 2006; FM Class 3616: 2011; FM Class 3810: 2005; ANSI/ISA 60079-0: 2013; ANSI/UL 60079-1: 2015; ANSI/UL 60079-11: 2014; ANSI/ISA 60079-15: 2012; ANSI/UL 60079-26: 2017; ANSI/UL 60079-31: 2015; ANSI/NEMA 250: 2003; ANSI/ IEC 60529: 2004			
B	Canadian Standards Association (CSA) USA and Canada	**Explosion Proof:** Class I, Division 1, Groups A, B, C, D; Class II, Division 1, Groups E, F, G; Class III, Division 1, T6..T5 Class I Zone 1 AEx db IIC T6..T5 Ga/Gb Ex db IIC T6..T5 Ga/Gb Zone 22 AEx tb IIIC T95º Db Ex tb IIIC T95º Db	All	Note 1	T5: -50ºC TO 85ºC T6: -50ºC TO 65ºC
		Intrinsically Safe: Class I, II, III, Division 1, Groups A, B, C, D; Class II, Division 1, Groups E, F, G; Class III, Division 1, T4 Class I Zone 0, AEx ia IIC T4 Ga Class I Zone 2, AEx ic IIC T4 Gc Ex ia IIC T4 Ga Ex ic IIC T4 Gc FISCO Field Device (Only for FF Option) Ex ia IIC T4 Ga; Ex ic IIC T4 Gc	4-20 mA / DE/ HART	Note 2	-50ºC TO 70ºC
			Foundation Fieldbus	Note 2	-50ºC TO 70ºC
		Nonincendive: Class I, Division 2, Groups A, B, C, D; Class II, Division 2, Groups F, G; Class III, Division 2, T4	4-20 mA / DE/ HART/ Foundation Fieldbus	Note 1	-50ºC to 85ºC

MSG CODE	AGENCY	TYPE OF PROTECTION	COMM. OPTION	ELECTRICAL PARAMETERS	AMBIENT TEMP (Ta)
		Class I Zone 2 AEx nA IIC T4 Gc Ex nA IIC T4 Gc			
		Enclosure: Type 4X/ IP66/ IP67	All	All	-
		STANDARDS: CSA C22.2 No. 0-10; CSA C22.2 No. 94-M91; CSA C22.2 No. 25-1966; CSA C22.2 No. 30-M1986; CSA C22.2 No. 142-M1987; CSA C22.2 No. 157-92; CSA C22.2 No. 213-M1987; CSA-C22.2 No. 60529:05; CSA-C22.2 No. 60079-0:11; CSA-C22.2 No. 60079-1:11; CSA-C22.2 No. 60079-11:11; CSA-C22.2 No. 60079-15:12; CSA-C22.2 No. 60079-31:12; ISA 12.12.01-2010; ISA 60079-0: 2009; ISA 60079-11: 2011; ISA 60079-15: 2009; ISA 60079-26: 2008; ISA-60079-27:2007 (12.02.04)-2006 (R2011); UL 913 Ed. 6; UL 916:1998; ANSI/ISA-12.27.01-2011			
C	ATEX	**Flameproof: SIRA 12ATEX2233X** II 1/2 G Ex db IIC T6..T5 Ga/Gb II 2 D Ex tb IIIC T95ºC…T120ºC Db	All	Note 1	T5: -50ºC TO 85ºC T6: -50ºC TO 65ºC
		Intrinsically Safe: SIRA 12ATEX2233X II 1 G Ex ia IIC T4 Ga FISCO Field Device (Only for FF Option) II 1 G Ex ia IIC T4 Ga	4-20 mA / DE/ HART	Note 2	-50ºC TO 70ºC
			Foundation Fieldbus	Note 2	-50ºC TO 70ºC
		Zone 2, Increase Safety: SIRA 12ATEX4234X II 3 G Ex ec IIC T4 Gc	4-20 mA / DE/ HART/	Note 1	-50ºC TO 85ºC
		Zone 2, Intrinsically Safe: SIRA 12ATEX4234X II 3 G Ex ic IIC T4 Gc FISCO Field Device (Only for FF Option) II 3 G Ex ic IIC T4 Gc	4-20 mA / DE/ HART/ Foundation Fieldbus	Note 2	-50ºC TO 85ºC
		Enclosure: IP66/ IP67	All	All	-
		STANDARDS: EN 60079-0: 2012/A11: 2013; EN 60079-1: 2014; EN 60079-7: 2015; EN 60079-11: 2012; EN 60079-26: 2015; EN 60079-31: 2009			
D	IECEx World	**Flameproof: IECEx SIR 12.0100X** Ex db IIC T6..T5 Ga/Gb Ex tb IIIC T95ºC…T120ºC Db	All	Note 1	T5: -50ºC TO 85ºC T6: -50ºC TO 65ºC
		Intrinsically Safe: IECEx SIR 12.0100X Ex ia IIC T4 Ga FISCO Field Device (Only for FF Option) Ex ia IIC T4 Ga; Ex ic IIC T4 Gc	4-20 mA / DE/ HART	Note 2	-50ºC TO 70ºC
			Foundation Fieldbus	Note 2	-50ºC TO 70ºC
		Zone 2, Increase Safety: IECEx SIR 12.0100X Ex ec IIC T4 Gc	4-20 mA / DE/ HART/ Foundation Fieldbus	Note 1	-50ºC TO 85ºC
		Zone 2, Intrinsically Safe: IECEx SIR 12.0100X Ex ic IIC T4 Gc FISCO Field Device (Only for FF Option) Ex ic IIC T4 Gc	4-20 mA / DE/ HART/ Foundation Fieldbus	Note 2	-50ºC TO 85ºC

MSG CODE	AGENCY	TYPE OF PROTECTION	COMM. OPTION	ELECTRICAL PARAMETERS	AMBIENT TEMP (Ta)
		Enclosure: IP66/ IP67	All	All	-
		STANDARDS: IEC 60079-0: 2011; IEC 60079-1: 2014; IEC 60079-7: 2017; IEC 60079-11: 2011; IEC 60079-26: 2014; IEC 60079-31: 2013			

E	**SAEx South Africa**	**Flameproof :** Ex d IIC T6…T5 Ga/Gb Ex tb IIIC T95ºC…T120ºC Db	All	Note 1	T5: -50ºC TO 85ºC T6: -50ºC TO 65ºC
		Intrinsically Safe: Ex ia IIC Ga T4 FISCO Field Device (Only for FF Option) Ex ia IIC T4 Ga; Ex ic IIC T4 Gc	4-20 mA / DE/ HART	Note 2	-50ºC TO 70ºC
			Foundation Fieldbus	Note 2	-50ºC TO 70ºC
		Zone 2, Increase Safety: II 3 G Ex ec IIC T4 Gc	4-20 mA / DE/ HART/ Foundation Fieldbus	Note 1	-50ºC TO 85ºC
		Zone 2, Intrinsically Safe: Ex ic IIC T4 Gc FISCO Field Device (Only for FF Option) Ex ic IIC T4 Gc	4-20 mA / DE/ HART/ Foundation Fieldbus	Note 2	-50ºC TO 85ºC
		Enclosure: IP66/ IP67	All	All	-
F	**INMETRO Brazil**	**Flameproof:** Ex db IIC T6..T5 Ga/Gb Ex tb IIIC T95ºC…T120ºC Db	All	Note 1	T5: -50ºC TO 85ºC T6: -50ºC TO 65ºC
		Intrinsically Safe: Ex ia IIC T4 Ga	4-20 mA / DE/ HART	Note 2a	-50ºC TO 70ºC
		FISCO Field Device (Only for FF Option) Ex ia IIC T4 Ga; Ex ic IIC T4 Gc	Foundation Fieldbus	Note 2b	-50ºC TO 70ºC
		Zone 2, Increase Safety: II 3 G Ex ec IIC T4 Gc	4-20 mA / DE/ HART/ Foundation Fieldbus	Note 1	-50ºC TO 85ºC
		Zone 2, Intrinsically Safe: Ex ic IIC T4 Gc FISCO Field Device (Only for FF Option) Ex ic IIC T4 Gc	4-20 mA / DE/ HART/ Foundation Fieldbus	Note 2	-50ºC TO 85ºC
		Enclosure : IP 66/67	All	All	-
G	**NEPSI CHINA**	**Flameproof:** Ex db IIC T6..T5 Ga/Gb Ex tb IIIC T 95ºC Db	All	Note 1	T5: -50ºC TO 85ºC T6: -50ºC TO 65ºC
		Intrinsically Safe: Ex ia IIC T4 Ga	4-20 mA / DE/ HART	Note 2	-50ºC TO 70ºC

		FISCO Field Device (Only for FF Option) Ex ia IIC T4 Ga; Ex ic IIC T4 Gc	Foundation Fieldbus	Note 2	-50ºC TO 70ºC
		Zone 2, Increase Safety: II 3 G Ex ec IIC T4 Gc	4-20 mA / DE/ HART/ Foundation Fieldbus	Note 1	-50ºC TO 85ºC
		Zone 2, Intrinsically Safe: Ex ic IIC T4 Gc FISCO Field Device (Only for FF Option) Ex ic IIC T4 Gc	4-20 mA / DE/ HART/ Foundation Fieldbus	Note 2	-50ºC TO 85ºC
		Enclosure : IP 66/67	All	All	-

H	**KOSHA Korea** **(Not available for ST700 Basic Transmitter)**	**Flameproof :** Ex d IIC T4, T5, T6 Ex tD A21 IP66/IP67 T95ºC…T120 ºC	All	Note 1	T4: -50ºC TO 85ºC T5: -50ºC TO 85ºC T6: -50ºC TO 65ºC
		Intrinsically Safe: Ex ia IIC T4	4-20 mA / DE/ HART	Note 2	Ta= -50 ºC to 70ºC
			Foundation Fieldbus	Note 2	Ta= -50 ºC to 70ºC
		Enclosure: IP66/ IP67	All	All	-
I	**EAC Russia, Belarus and Kazakhstan**	**Flameproof:** Ga/Gb Ex d IIC T6..T5 Ex tb IIIC Db T 85ºC	All	Note 1	T5: -50ºC TO 85ºC T6: -50ºC TO 65ºC
		Intrinsically Safe: Ga Ex ia IIC T4 X FISCO Field Device (Only for FF Option) Ga Ex ia IIC T4 X	4-20 mA / DE/ HART	Note 2	-50ºC TO 70ºC
			Foundation Fieldbus	Note 2	-50ºC TO 70ºC
		Zone 2, Non Sparking: 2 Ex nA IIC T4 Gc X	4-20 mA / DE/ HART/ Foundation Fieldbus	Note 1	-50ºC TO 85ºC
		Zone 2, Intrinsically Safe: Ga Ex ic IIC T4 X FISCO Field Device (Only for FF Option) 2 Ex ic IIC T4 Gc X	4-20 mA / DE/ HART/ Foundation Fieldbus	Note 2	-50ºC TO 85ºC
		Enclosure : IP 66/67	All	All	
J	**CCoE INDIA**	**Flameproof:** Ex d IIC T6..T5 Ga/Gb	All	Note 1	T5: -50ºC TO 85ºC T6: -50ºC TO 65ºC
		Intrinsically Safe: Ex ia IIC T4 Ga FISCO Field Device (Only for FF Option) Ex ia IIC T4 Ga; Ex ic IIC T4 Gc	4-20 mA / DE/ HART	Note 2	-50ºC TO 70ºC
			Foundation Fieldbus	Note 2	-50ºC TO 70ºC

		Non Sparking Ex nA IIC T4 Gc	4-20 mA / DE/ HART/ Foundation Fieldbus	Note 1	-50ºC TO 85ºC
		Enclosure: IP66/ IP67	All	All	-
K	**UATR UKRAINE**	**Flameproof:** II 1/2 G Ex db IIC T6..T5 Ga/Gb II 2 D Ex tb IIIC T95ºC…T120ºC Db	All	Note 1	T5: -50ºC TO 85ºC T6: -50ºC TO 65ºC
		Intrinsically Safe: II 1 G Ex ia IIC T4 Ga FISCO Field Device (Only for FF Option) II 1 G Ex ia IIC T4 Ga	4-20 mA / DE/ HART	Note 2	-50ºC TO 70ºC
			Foundation Fieldbus	Note 2	-50ºC TO 70ºC
		Enclosure: IP66/ IP67	All	All	-

Notes

1. **Operating Parameters:**
   Voltage= 11 to 42 V Current= 4-20 mA Normal (3.8 – 23 mA Faults)

2. **Intrinsically Safe Entity Parameters**

For details see Control Drawing 50049892.

3. **Marking ATEX Directive**

The following information is provided as part of the labeling of the transmitter:

- Name and Address of the manufacturer
- Notified Body identification: DEKRA Quality B.V., Arnhem, the Netherlands
- For complete model number, see the Model Selection Guide for the model of pressure transmitter.

The serial number of the transmitter is located on the Meter Body data-plate. The first two digits of the serial number identify the year (02) and the second two digits identify the week of the year (23); for example, 0223xxxxxxxx indicates that the product was manufactured in 2002, in the 23rd week

4. **Apparatus Marked with Multiple Types of Protection**

The user must determine the type of protection required for installation the equipment. The user shall then check the box [ ] adjacent to the type of protection used on the equipment certification nameplate. Once a type of protection has been checked on the nameplate, the equipment shall not then be reinstalled using any of the other certification types.

5. **WARNINGS and Cautions:**

<u>Intrinsically Safe and Non-Incendive Equipment:</u>
WARNING: SUBSTITUTION OF COMPONENTS MAY IMPAIR SUITABILITY FOR USE IN HAZARDOUS LOCATIONS.
<u>Explosion-Proof/ Flameproof:</u>
WARNING: DO NOT OPEN WHEN AN EXPLOSIVE ATMOSPHERE MAY BE PRESENT
<u>Non-Incendive Equipment:</u>
WARNING: DO NOT OPEN WHEN AN EXPLOSIVE ATMOSPHERE MAYBE PRESENT
WARNING: FOR CONNECTION IN AMBIENTS ABOVE 60ºC USE WIRE RATED 105oC

6. Conditions of Use for Ex Equipment, "Hazardous Location Equipment" or "Schedule of Limitations":

Painted surface of the ST700/ST800 may store electrostatic charge and become a source of ignition in applications with a low relative humidity less than approximately30% relative humidity where the painted surface is relatively free of surface contamination such as dirt, dust or oil. Cleaning of the painted surface should only be done with a damp cloth.

Flame-proof Installations: The transmitter can installed in the boundary wall between an area of EPL Ga/ Class I Zone 0/ Category 1 and the less hazardous area, EPL Gb/ Class I Zone 1/ Category 2. In this configuration, the process connection is installed in EPL Ga/ Class I Zone 0/ Category 1, while the transmitter housing is located in EPL Gb/ Class I Zone 1/ Category 2.

The applicable temperature class, ambient temperature range and maximum process temperature of the equipment is as follows;

PROCESS TEMPERATURE VS AMBIENT TEMPERATURE

	Maximum Process Temperature		
Temperature Class	T6	T5	T4
Ambient Temperature			
-50ºC TO +65 ºC	80 ºC	----	120 ºC
-50ºC TO +70 ºC	-----	----	120 ºC
-50ºC TO +85 ºC	-----	95 ºC	110 ºC

Consult the manufacturer for dimensional information on the flameproof joints for repair.
The transmitter can be installed in the boundary wall between an area of Category 1 and the less hazardous area, Category 2. In this configuration, the process connection is installed in Category 1 while the transmitter housing is installed in Category 2.

Intrinsically Safe: Must be installed per drawing 50049892

Division 2: This equipment is suitable for use in a Class I, Division 2, Groups A, B, C, D; T4 or Non-Hazardous Locations Only.

The enclosure is manufactured from low copper aluminum alloy. In rare cases, ignition sources due to impact and friction sparks could occur. This shall be considered during Installation, particularly if equipment is installed a Zone 0 location.

If a charge-generating mechanism is present, the exposed metallic part on the enclosure is capable of storing a level of electrostatic that could become Incendive for IIC gases. Therefore, the user/ installer shall implement precautions to prevent the buildup of electrostatic charge, e.g. earthing the metallic part. This is particularly important if equipment is installed a Zone 0 location.

A4. Control Drawing

COPYRIGHT 2016, HONEYWELL INTERNATIONAL INC. NEITHER THIS DOCUMENT NOR THE INFORMATION CONTAINED HEREIN SHALL BE REPRODUCED, USED OR DISCLOSED TO OTHERS WITHOUT THE WRITTEN AUTHORIZATION OF HONEYWELL. USE, DUPLICATION, OR DISCLOSURE OF THIS DOCUMENT IS SUBJECT TO THE RESTRICTIONS SET FORTH IN A WRITTEN AGREEMENT. NOTHING CONTAINED HEREIN SHALL BE CONSTRUED AS CONFERRING BY IMPLICATION, ESTOPPEL, OR OTHERWISE ANY LICENSE TO ANY PATENT, TRADEMARK, COPYRIGHT OR OTHER INTELLECTUAL PROPERTY RIGHT OF HONEYWELL OR ANY THIRD PARTY.

PRE REL		
ISS	REVISION & DATE	APPD
G	06/20/2016 ECN 2016-3397	DGG

ST 800/ ST 700 Series Pressure, ANALOG, HART/DE and FF/ PA Communications

1. Intrinsically safe installation shall be in accordance with
   a. FM (USA): ANSI/NFPA 70, NEC* Articles 504 and 505.
   b. CSA (Canada): Canadian Electrical Code (CEC), part I, section 18.
   c. ATEX: Requirements of EN 60079-14, 12.3 (See also 5.2.4).
   d. IECEx: Requirements of IEC 60079-14, 12.3 (See also 5.2.4).
2. ENTITY approved equipment shall be installed in accordance with the manufacturer's Intrinsic Safety Control Drawing.
3. The Intrinsic Safety ENTITY concept allows the interconnection of two ENTITY Approved Intrinsically safe devices with ENTITY parameters not specifically examined in combination as a system when:

   Uo, Voc, or Vt ≤ Ui or Vmax; Io, Isc, or It ≤ Ii or Imax; Ca or Co ≥ Ci + Ccable, La or Lo ≥ Li + Lcable, Po ≤ Pi. Where two separate barrier channels are required, one dual-channel or two single-channel barriers may be used, where in either case, both channels have been Certified for use together with combined entity parameters that meet the above equations.
4. System Entity Parameters:

   ST 800/ ST 700 Transmitter: Vmax Voc or Uo, Imax Isc or Io;
   ST 800/ ST 700 Transmitter: Ci + Ccable ≤ Control Apparatus Ca,
   ST 800/ ST 700 Transmitter: Li + Lcable ≤ Control Apparatus La.
5. When the electrical parameters of the cable are unknown, the following values may be used:

   Capacitance: 197pF/m (60 pF/ft)
   Inductance: 0.66µH/m (0.020µH/ft).
6. Control equipment that is connected to Associated Equipment must not use or generate more than 250 V.
7. Associated equipment must be FM, CSA ATEX or IECEx (depending on location) listed. Associated equipment may be installed in a Class I, Division 2 or Zone 2 Hazardous (Classified) location if so approved.
8. Non-Galvanically isolated equipment (grounded Zener Barriers) must be connected to a suitable ground electrode per:
   a. FM (USA): NFPA 70, Article 504 and 505. The resistance of the ground path must be less than 1.0 ohm.
   b. CSA (Canada): Canadian Electrical Code (CEC), part I, section 10.
   c. ATEX: Requirements of EN 60079-14, 12.2.4.
   d. IECEx: Requirements of IEC 60079-14, 12.2.4.
9. Intrinsically Safe DIVISION 1/ Zone 0 WARNING: SUBSTITUTION OF COMPONENTS MAY IMPAIR SUITABILITY FOR USE IN HAZARDOUS LOCATIONS.
10. Division 2/ Zone 2: WARNING: DO NOT OPEN WHEN AN EXPLOSIVE GAS ATMOSPHERE IS PRESENT.
11. NO REVISION OF THIS CONTROL DRAWING IS PERMITTED WITHOUT AUTHORIZATION FROM THE AGENCIES listed.
12. For release approvals see ECO # 0094464.

DRAWN	KP	1/9/2015	Honeywell
CHECKED			CONTROL DRAWING ST 800/ ST 700 SERIES PRESSURE TRANSMITTER DIVISIONS 1 & 2 / ZONE 0 & 2
DEV ENG			
MFG ENG			
QA ENG			
TOLERANCE UNLESS NOTED			A A4 — 50049892
ANGULAR DIMENSION			SCALE: None — USED ON — SH. 1 OF 5

MASTER FILE TYPE: MS WORD

Output Protocol: H=HART or D=DE

All Models of ST800 and the following Models of the ST700: STA722, STA740, STA72L, STA74L, STA77L, STD720, STD730, STD770, STG730, STG740, STG770, STG73L, STG74L, STG77L, STG78L, STG79L, STF724, STF732, STF72F, STF73F, STR73D, STR74G, STR73D, and STR74G

ENTITY PARAMETERS	Associated Apparatus
Ui or Vmax ≤ 30V	Uo, Voc or Vt ≤ 30V
Ii or Imax ≤ 105 mA	Io (Isc or It) ≤ 105 mA
Pi or Pmax = 0.9W	Po ≤ 0.9 W
Ci= 3.9 nF	Ca or Co ≥ C_{cable} + $C_{ST\ 800/\ ST\ 700}$
Li= 984 µH	La or Lo ≥ L_{cable} + $L_{ST\ 800/\ ST\ 700}$

After 9/27/2013 (TERMINAL MODULE REVISION E OR LATER)

NOTE: THE REVISION IS ON THE LABEL THAT IS ON THE MODULE. THERE WILL BE TWO LINES OF TEXT ON THE LABEL:
- FIRST IS THE MODULE PART #: 50049839-001 OR 50049839-002
- SECOND LINE HAS THE SUPPLIER INFORMATION, ALONG WITH THE REVISION: XXXXXXX-EXXXX, THE "X" IS PRODUCTION RELATED, THE POSITION OF THE "E" IS THE REVISION.

Additionally for the ST700 Models: STA725, STA745, STA72S, STA74S, STA77S, STD725, STD735, STD775, STG735, STG745, STG775, STG73S, STG74S, STG77S, STG78S, STG79S, STF725, STF735, STF72P, STF73P, STR735D, and STR745G

ENTITY PARAMETERS (Divisions and Zones Ex ia and Ex ic)	Associated Apparatus
Ui or Vmax ≤ 30V	Uo, Voc or Vt ≤ 30V
Ii or Imax ≤ 225 mA	Io (Isc or It) ≤ 225 mA
Pi or Pmax = 0.9W	Po ≤ 0.9 W
Ci= 3.9 nF	Ca or Co ≥ C_{cable} + $C_{ST\ 800/\ ST\ 700}$
Li= 0 µH	La or Lo ≥ L_{cable} + $L_{ST\ 800/\ ST\ 700}$

Honeywell	A/A4	50049892		
	SCALE: None	REV G	DATE 06/20/16	SH. 2 of 5

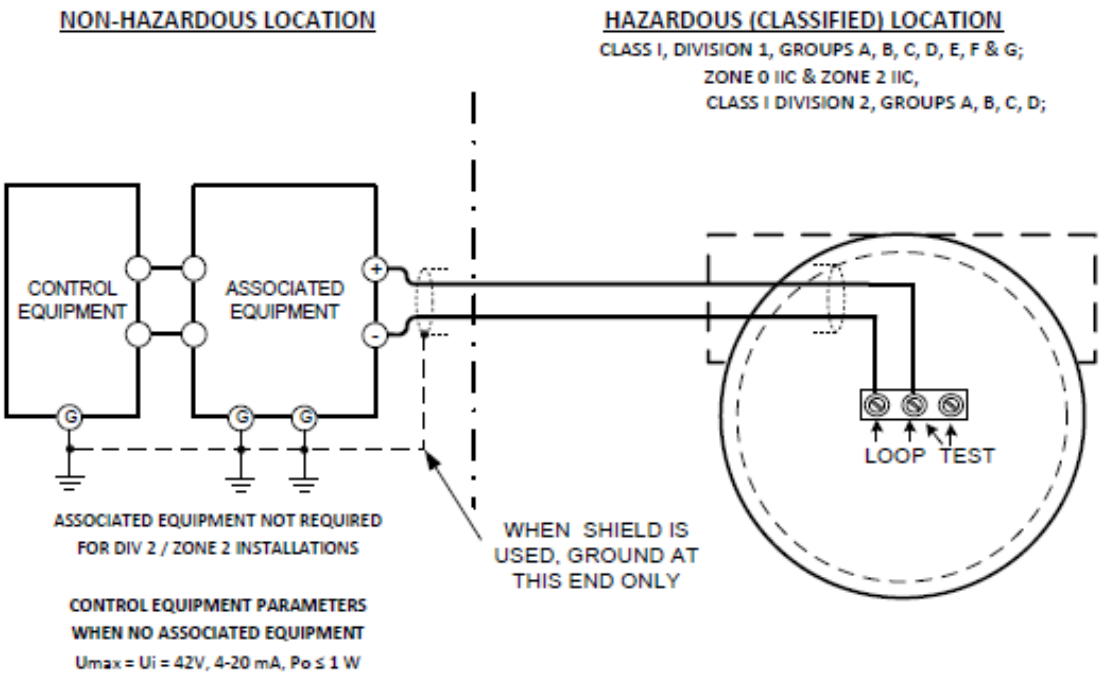

Honeywell	A/A4	50049892		
	SCALE: None	REV G	DATE 06/20/16	SH. 3 of 5

Output Protocol: F=Foundation Fieldbus or P= PROFIBUS

All Models of ST800 and the following Models of the ST700: STA722, STA740, STA72L, STA74L, STA77L, STD720, STD730, STD770, STG730, STG740, STG770, STG73L, STG74L, STG77L, STG78L, STG79L, STF724, STF732, STF72F, STF73F, STR73D, STR74G, STR73D, and STR74G

ENTITY PARAMETERS	Associated Apparatus
Ui or Vmax ≤ 30V	Uo, Voc or Vt ≤ 30V
Ii or Imax ≤ 180 mA	Io (Isc or It) ≤ 180 mA
Pi or Pmax = 1W	Po ≤ 1 W
Ci= 0 nF	Ca or Co ≥ C_{cable} + $C_{ST\ 800/\ ST\ 700}$
Li= 984 µH	La or Lo ≥ L_{cable} + $L_{ST\ 800/\ ST\ 700}$

Terminal Module Revision F or Later

NOTE: THE REVISION IS ON THE LABEL THAT IS ON THE MODULE. THERE WILL BE TWO LINES OF TEXT ON THE LABEL:

- FIRST IS THE MODULE PART #: 50049839-003 OR 50049839-004
- SECOND LINE HAS THE SUPPLIER INFORMATION, ALONG WITH THE REVISION: XXXXXXX-FXXXX, THE "X" IS PRODUCTION RELATED; THE POSITION OF THE "F" IS THE REVISION.

ENTITY PARAMETERS	Associated Apparatus
Ui or Vmax ≤ 30V	Uo, Voc or Vt ≤ 30V
Ii or Imax ≤ 225 mA	Io (Isc or It) ≤ 225 mA
Pi or Pmax = 1W	Po ≤ 1 W
Ci= 0 nF	Ca or Co ≥ C_{cable} + $C_{ST\ 800/\ ST\ 700}$
Li= 0 µH	La or Lo ≥ L_{cable} + $L_{ST\ 800/\ ST\ 700}$

NON-HAZARDOUS LOCATION

HAZARDOUS (CLASSIFIED) LOCATION

CLASS I, CLASS II, DIVISION 1, GROUPS A, B, C, D, E, F & G;
ZONE 0 IIC & ZONE 2 IIC,
CLASS I DIVISION 2, GROUPS A, B, C, D;

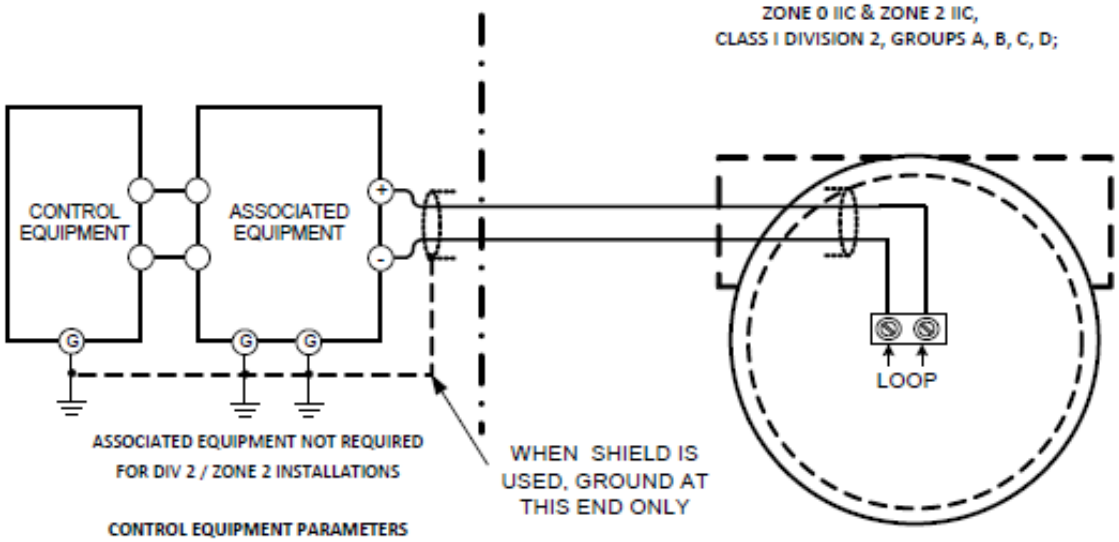

CONTROL EQUIPMENT PARAMETERS
WHEN NO ASSOCIATED EQUIPMENT
Umax=Ui= 32V, 25 mA, Po ≤ 1 W

Honeywell	A/A4	50049892		
	SCALE: None	REV G	DATE 06/20/16	SH. 4 of 5

Output Protocol: F=Foundation Fieldbus

All Models of ST800 and the following Models of the ST700: STA722, STA740, STA72L, STA74L, STA77L, STD720, STD730, STD770, STG730, STG740, STG770, STG73L, STG74L, STG77L, STG78L, STG79L, STF724, STF732, STF72F, STF73F, STR73D, STR74G, STR73D, and STR74G

FISCO Terminal Module Revision F or Later

NOTE: THE REVISION IS ON THE LABEL THAT IS ON THE MODULE. THERE WILL BE TWO LINES OF TEXT ON THE LABEL:

- FIRST IS THE MODULE PART #: 50049839-003 OR 50049839-004
- SECOND LINE HAS THE SUPPLIER INFORMATION, ALONG WITH THE REVISION: XXXXXXX-FXXXX, THE "X" IS PRODUCTION RELATED, THE POSITION OF THE "F" IS THE REVISION.

ENTITY PARAMETERS (Ex ia and Ex ic)	Associated Apparatus
Ui or Vmax ≤ 18	Uo, Voc or Vt ≤ 18V
Ii or Imax ≤ 380 mA	Io (Isc or It) ≤ 380 mA
Pi or Pmax = 5.32W	Po ≤ 5.32 W
Ci= 0 nF	Ca or Co ≥ C_{cable} + $C_{ST\ 800/\ ST\ 700}$
Li= 0 µH	La or Lo ≥ L_{cable} + $L_{ST\ 800/\ ST\ 700}$

NON-HAZARDOUS LOCATION

HAZARDOUS (CLASSIFIED) LOCATION
ZONE 0 IIC & ZONE 2 IIC,

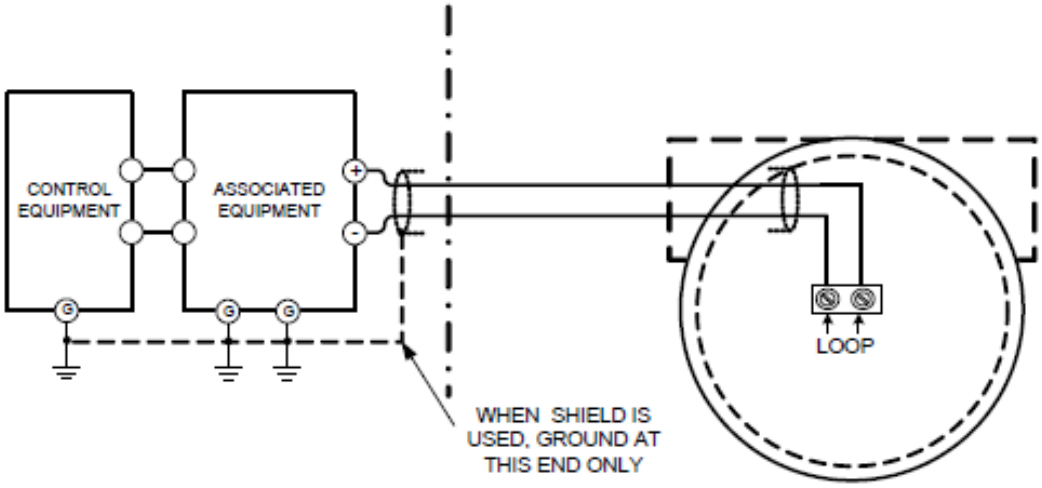

Honeywell	A/A4	50049892	
	SCALE: None	REV G DATE 06/20/16	SH. 5 of 5

A5. Marine Approvals

American Bureau of Shipping (ABS) **Certificate Number:** 14-HS1265317 **ABS Rules:** Rules for Conditions of Classification, Part 1 - 2014 Steel Vessel Rules 1-1-4/7.7, 1-1-A3, 1-1-A4 which Covers the following: Steel Vessels 4-6-2/5.15, 4-8-3/13, 4-8-4/27.5.1, 4-9-8/13; Offshore Support Vessels 4-8-3/13, 4-8-4/29.5.1, 4-9-8/13; High Speed Craft 4-6-3/9.1.1(a), 4-7-9/15.1; Rules for Conditions of Classification, Part 1 - 2014 Offshore Units and Structures 1-1-4/9.7, 1-1-A2, 1-1-A3
Bureau Veritas (BV) **Certificate Number**: 39542/A0 BV **Requirements:** Bureau Veritas Rules for the Classification of Steel Ships EC Code: 41S
Det Norske Veritas (DNV) **Certificate Number:** A-13982 **Application/ Location Classes:** Temperature D Humidity: B Vibration: A EMC: B Enclosure: C For salt spray exposure; enclosure of 316 SST or 2-part epoxy protection with 316 SST bolts to be applied.
Korean Register of Shipping (KR) **Appl. No**: DLN-T0044-14
Lloyd's Register (LR) **Certificate Number:** 14/60017 **Application:** For use in environmental categories ENV1, ENV2, ENV3 adn ENV5 as defined by Lloyd's Register Test specification No. 1, 2013.

A6. Recycling and disposal of product

Please consider recycling the product and packaging materials. The product should be disposed of in accordance with local and national regulations.

Glossary

AP	Absolute Pressure
AWG	American Wire Gauge
DE	Digital Enhanced Communications Mode
DP	Differential Pressure
d1	Inside diameter of pipe
d2	Orifice plate bore diameter at flowing temperature
do	Inside diameter of orifice
EMI	Electromagnetic Interference
FTA	Field Termination Assembly
GP	Gauge Pressure
HP	High Pressure (also, High Pressure side of a differential pressure transmitter)
Hz	Hertz
inH_2O	Inches of Water
LGP	In-Line Gauge Pressure
LP	Low Pressure (also, Low Pressure side of a differential pressure transmitter)
LRL	Lower Range Limit
LRV	Lower Range Value
mAdc	Milliamperes Direct Current
mmHg	Millimeters of Mercury
mV	Millivolts
Nm	Newton·meters
NPT	National Pipe Thread
NVM	Non-Volatile Memory
Pa	Measured static pressure in PV4 algorithm
Pc	Absolute critical pressure of the gas
Pd	Static pressure at downstream point
Pdp	Measured differential pressure in Pascals in PV4 algorithm
Pf	Absolute pressure of flowing gas
Pr	Reduced pressure
Pu	Static pressure at upstream point
PM	Process Manger
PSI	Pounds per Square Inch
PSIA	Pounds per Square Inch Absolute
PV	Process Variable
PWA	Printed Wiring Assembly
RFI	Radio Frequency Interference
RTD	Resistance Temperature Detector
STIM	Pressure transmitter Interface Module
STIMV IOP	Pressure transmitter Interface Multivariable Input/Output Processor
T/C	Thermocouple
URL	Upper Range Limit
URV	Upper Range Value
US	Universal Station
Vac	Volts Alternating Current
Vdc	Volts Direct Current

Index

A

About This Manual iii
Accuracy
ST 700 Basic Transmitter 113
ST 700 Standard Display 8
Application Design
ST 700 Basic Transmitter 113
ST 700 Standard Transmitter 8

B

Basic and Standard Display Operations
ST 700 Standard Transmitter 71
Basic Display Menus……..30, 45

C

Calibration
ST 700 Basic Transmitter 185
ST 700 Standard Transmitter 86
Changing the Default Failsafe
ST 700 Basic Transmitter 172
ST 700 Standard Transmitter 73
Copyrights, Notices and Trademarks ii

D

Data Entry
ST 700 Basic Transmitter 170
ST 700 Standard Transmitter 29
Diagnostic Messages
ST 700 Basic Transmitter 113
ST 700 Standard Display 8
Display Installation Precautions
ST 700 Basic Transmitter 117
ST 700 Standard Display 11
Display Options
ST 700 Basic Transmitter 111
ST 700 Standard Transmitter 6

E

Explosion-Proof Seal
ST 700 Transmitter 40

F

Features and Options
ST 700 Basic Transmitter 121
ST 700 Standard Transmitter 3

G

Glossary 221

H

Honeywell Versatilis Configurator
ST 700 Basic Transmitter 114
ST 700 Standard Display 10

I

Installation and Startup
ST 700 Basic Transmitter 114
ST 700 Standard Transmitter 10
Introduction
ST 700 Basic Transmitter 105
ST 700 Standard Transmitter 3

L

Location
ST 700 Basic Transmitter 123
ST 700 Standard Transmitter 20

M

Maintenance
ST 700 Basic Transmitter 176
ST 700 Standard Transmitter 77
Mounting
ST 700 Basic Transmitter 115
ST 700 Standard Transmitter 12

N

Nameplate
ST 700 Basic Transmitter 110
ST 700 Standard Transmitter 5

O

Operation
ST 700 Basic Transmitter 131
ST 700 Standard Transmitter 27

P

Parts List
ST 700 Basic Transmitter 187
ST 700 Standard Transmitter 89
Patent Notice iv
Piping
ST 700 Basic Transmitter 122
ST 700 Standard Transmitter 19
Product Certifications
ST 700 Basic Transmitter 202

R

References iv
Release Information iii
Replacing the Communication Module
  ST 700 Basic Transmitter 121
  ST 700 Standard Transmitter 50
Replacing the Meter Body Module
  ST 700 Basic Transmitter 179
  ST 700 Standard Transmitter 81

S

Safety Certification
  ST 700 Basic Transmitter 111
  ST 700 Standard Transmitter 6
Safety_SIL
  ST 700 Basic Transmitter 9, 113
Site Evaluation
  ST 700 Basic Transmitter 114
  ST 700 Standard Display 10
ST 700 Basic Transmitter
  Application Design 113
  Calibration 185
  Installation and Startup 114
  Introduction 105
  Maintenance 176
  Operation 131
  Parts List 187
  Product Certifications 202
  Troubleshooting 186
ST 700 Standard Transmitter
  Application Design 8
  Calibration 86
  Installation and Startup 10
  Introduction 3
  Maintenance 77
  Operation 27
  Parts List 89
  Troubleshooting 87
ST 700 Transmitter Series 1
Standard Display Abbreviations
  ST 700 Basic Transmitter 169
  ST 700 Standard Transmitter 69
Startup
  ST 700 Basic Transmitter 114
  ST 700 Standard Transmitter 25
Support and Contact Information v
Symbol Descriptions and Definitions vi

T

Telephone and Email Contacts v
Three Button Operation no Display
  ST 700 Standard Transmitter 72
Three-Button Operation
  ST 700 Standard Transmitter 43
Transmitter Adjustments
  ST 700 Basic Transmitter 111
  ST 700 Standard Transmitter 6
Troubleshooting
  ST 700 Basic Transmitter 186
  ST 700 Standard Transmitter 87
Two-Button Assembly
  ST 700 Standard Transmitter 7
Two-Button Operation
  ST 700 Standard Transmitter 50
  ST 700 Basic Transmitter 131

W

Wiring
  ST 700 Basic Transmitter 125
  ST 700 Standard Transmitter 21

Sales and Service

For application assistance, current specifications, ordering, pricing, and name of the nearest Authorized Distributor, contact one of the offices below.

ASIA PACIFIC

Honeywell Process Solutions,
Phone: + 800 12026455 or
+44 (0) 1202645583
(TAC) **hfs-tac-support@honeywell.com**

Australia
Honeywell Limited
Phone: +(61) 7-3846 1255
FAX: +(61) 7-3840 6481
Toll Free 1300-36-39-36
Toll Free Fax:
1300-36-04-70

China – PRC - Shanghai
Honeywell China Inc.
Phone: (86-21) 5257-4568
Fax: (86-21) 6237-2826

Singapore
Honeywell Pte Ltd.
Phone: +(65) 6580 3278
Fax: +(65) 6445-3033

South Korea
Honeywell Korea Co Ltd
Phone: +(822) 799 6114
Fax: +(822) 792 9015

EMEA

Honeywell Process Solutions,
Phone: + 800 12026455 or
+44 (0) 1202645583

Email: (Sales)
FP-Sales-Apps@Honeywell.com
or
(TAC)
hfs-tac-support@honeywell.com

Web
Knowledge Base search
engine **http://bit.ly/2N5VIdi**

AMERICAS

Honeywell Process Solutions,
Phone: (TAC) (800) 423-9883
or (215) 641-3610
(Sales) 1-800-343-0228

Email: (Sales)
FP-Sales-Apps@Honeywell.com
or
(TAC)
hfs-tac-support@honeywell.com

Web
Knowledge Base search
engine **http://bit.ly/2N5VIdi**

For more information

To learn more about SmartLine Transmitters,
visit https://process.honeywell.com
Or contact your Honeywell Account Manager

Process Solutions
Honeywell
1250 W Sam Houston Pkwy S
Houston, USA, TX 77042

Honeywell Control Systems Ltd
Honeywell House, Skimped Hill Lane
Bracknell, England, RG12 1EB

Shanghai City Centre, 100 Jungi Road
Shanghai, China 20061

https://process.honeywell.com

34-ST-25-44 Rev.14
October 2023
©2023 Honeywell International Inc.