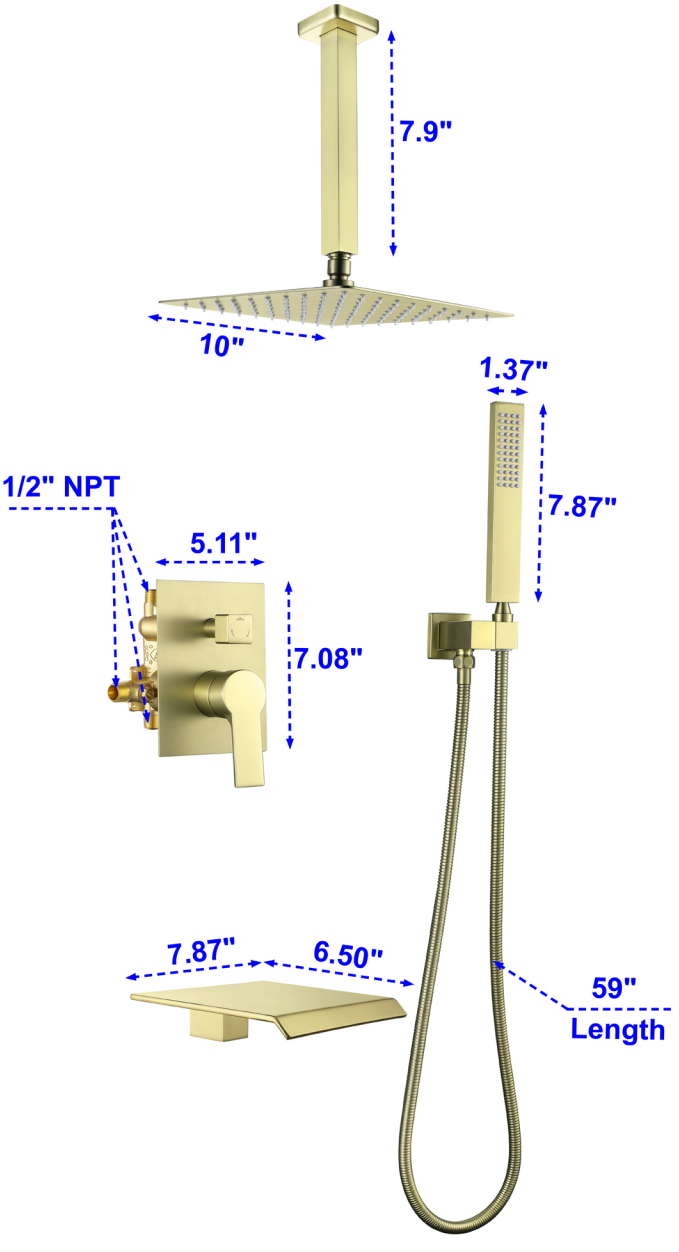
7.9"
10"
1.37"
7.87"
1/2" NPT
5.11"
7.08"
7.87"
6.50"
59"
Length