Arcam Alpha One/ 7R/ 8R/ 8P Amplifier Service Manual

Issue 1 Serial Number 001 - (Paul Newton/ Haider Bahrani Sept '98)

Circuit Description

The Alpha One / 7R/8R and 8P share a common pcb. The circuits are very similar and the main differences are the remote volume facility and extra power output on the 7R and 8R and a switch to bypass the phono stage to enable its use as an extra line level input and the AV processor switch on the Alpha 8R integrated amplifier. The 8P power amplifier utilises the same power amplifier circuit as the Alpha 8R integrated amplifier.

Power Supplies

The ac output of the toroidal mains transformer is rectified and smoothed by D201-204 and C204, 205. This is then regulated to +/-15V by Z201, 202 to power the phono and tone control stages and the d.c. servo.

The Alpha 7R and 8R transformers have an extra tapping which is used for the remote volume circuit. The ac in is regulated to 5V by zener D902 and associated components and this is then used to power the microcontroller Z901 and remote receiver.

Phono Stage (Not applicable to Alpha One)

The phono stage consists of a dual opamp Z305, one opamp per channel. The RIAA equalization is achieved by the feedback components R703, 704, 702 and C704, 705, 702 on left channel (R603 etc. as above for Right channel). R703 determines the gain and C703 the low frequency roll off.

On the Alpha 8R this stage can be bypassed by use of switch SW302 to enable use as an extra line input.

Tone Controls

The tone control stage is based around Z304 a dual op amp.
The range of the controls is set by R507, 508 for the bass pot RV302 and R509, 510 for the treble pot RV303.
The tone controls and balance pot can be bypassed by use of the direct switch, SW304.

Power Amplifier

The input to the power amplifier from previous stages is fed to the differential input of Q112 and Q113. Q110 and Q111 form a constant current source for the differential input stage.

The output devices are 'n' channel mosfets SMF045. Zener diodes D103,104 limit the voltage swing within safe limits for the output devices & fusible resistors R105, 106 provide overcurrent damage to the devices.

A proportion of the output current appears across the protection network R41,42. If this becomes too high Q17 is turned on and mutes the output. High D.C. levels at the output will also mute the output. There are no output fuses on the Alpha One, 7R and 8R/8P amplifiers. The muting is done by the mute ic Z303 and its associated compontents. The mute operates on switch on/off and if an over current or over voltage condition occurs. The power led glows amber when the mute circuit is operative and glows green in normal use.

Removing the Alpha One/ 7R/ 8R/ 8P Transformer

The toroidal transformer is extremely well secured to the main pcb with a double sided adhesive gasket. To remove the transformer you must break this adhesive bond by cutting through the gasket. This will be easier if the transformer is warm.
Use a cheese wire under the transformer, pulling backwards and forwards under tension to gradually cut through. Once most of the adhesive is cut, you should be able to pull the transformer away from the pcb.

A less satisfactory substitute for cheese wire is to use some 22 gauge tinned copper wire, stretched first to remove kinks, and two temporary handles.

Alpha One/7R/ 8R/ 8P Quiescent Current (IQ) Settings

When replacing the output transistors of the above amplifiers it is important to reset the quiescent current (IQ) to the correct value to prevent the amplifier blowing again.

The IQ should be checked and set by following the procedure below:

From cold and with no load or signal connected
Turn both IQ presets (RV1 and RV101) down to minimum (fully anticlockwise) and set the voltage drop across resistor R1 (R101 for right hand channel) to between 3.0 and 3.5mV for the Alpha One and 7R

amps or between 2.3 and 2.8mV for the Alpha 8R/8P amps.

Leave the unit for 1 minute and reset to these values if required.

Leave the unit for a further 5 minutes and reset if required.

The IQ is now set and the unit can be connected to speakers and fully checked out.

Disassembly For Servicing

1. Remove the top cover and front panel.
2. Remove 2 screws securing the sub front to the chassis sides and 3 screws holding the subfront to the chassis base.
3. Remove 1 screw holding the pcb to the chassis. This can be found near to the mains inlet socket.
4. Remove 5 screws from the rear panel, one at each end and 3 along the bottom edge.
5. Remove the transformer bolt.
6. Release the PCB pillar located near to the serial number on the pcb.

The pcb, with the rear panel, transformer and subfront attached, can now be pulled backwards out of the unit.

TEST POINT VOLTAGES

Test Point	DC Voltage Alpha One	DC Voltage Alpha 7R	DC Voltage Alpha 8R/8P
1	32.8V	35V	37V
2	27.8V	29V	31V
3	15V	15V	15V
4	-32.8V	-35V	-37V
5	27.8V	-29V	-31V
6	-15V	-15V	-15V
7	N/A	0.09V	0.09V
8	N/A	0.10V	0.10V
9	0.3V	0.27V	0.27V
10	3.4V	3.2V	2.9V
11	32.8V	35V	37V
12	-3V	-2.7V	-2.5V
13	32.8V	-35V	-37V
Between 14 & 15	3.0 -3.5mV	3.0-3.5mV	2.3-2.8mV
16 (protection off)		0.0V	0.0V
16 (protection on)		0.6V	0.6V
17		0.0V	0.0V
18		0.0V	0.0V
19		0.0V	0.0V

Test Point	DC Voltage Alpha One	DC Voltage Alpha 7R	DC Voltage Alpha 8R/8P
20	0.0V	0.0V	0.0V
21 (protection off)	1.6V	1.6V	1.6V
21 (protection on)	5.0V	5.0V	5.0V
22	0.58V	0.17V	0.17V
23	3.4V	3.1V	3.1V
24	-3V	-2.7V	-2.7V
25	-26V	-29V	-29V
Between 26 & 27	3.4mV	3.4mV	2.5mV
28 (muted)	35V	35V	35V
28 (protection off)	1V	1V	1V
29	N/A	5V	5V
30	N/A	10.5	10.5V
31 (volume going up)	N/A	0V	0V
31 (volume going down)	N/A	5V	5V
32 (volume going up)	N/A	0V	0V
32 (volume going down)	N/A	5V	5V

PARTS LISTS

The parts for all the units are as the Alpha 7 except where shown.

REF	Description	Part No	Product
C1	ELST 100U 100V	2N710B	7R
C2	PEST 47N 63V 10%	2K347	7R
C3	PCRB 100N 100V 5% RA 5mm	2H410	7R
C4	PEST 47N 63V 10%	2K347	7R
C5	PSTY 33P 160V ENCAP 1PF%	2F033	7R
C7	PPRO 4N7 63V 5% RA	2D247N	7R
C8	PPRO 100P 63V 5% RA	2D110N	7R
C9	ELST 100U 25V	2N710	A1
C10	ELST 22U 20V OSCON	2P622	7R
C10	ELST 22U 63V ELECT	2N622	A1
C11	ELST 100U 100V	2N710B	7R
C12	ELST 100U 100V	2N710B	7R
C13	PEST 15N 63V 10%	2K315	7R
C14	PEST 15N 63V 10%	2K315	7R

C15	SUPPR CAP 4N7 250V	2K247	7R
C16	ELST 100U 25V	2N710	7R
C17	CERD 470P 63V 20% RA	2A147	7R
C18	CERD 1N0 63V 20% RA	2A210	7R
C19	ELST 100U 25V	2N710	7R
C20	CERD 470P 63V 20% RA	2A147	7R
C21	CERD 10N 63V 20% RA	2A310	7R
C22	CERD 10N 63V 20% RA	2A310	7R
C23	SUPPR CAP 4N7 250V	2K247	7R
C24	PPRO 4N7 63V 5% RA	2D247N	7R
C25	PCRB 100N 100V 5% RA 5mm	2H410	7R
C26	PCRB 100N 100V 5% RA 5mm	2H410	7R
C27	ELST 220U 16V	2N722	7R
C28	PCRB 100N 100V 5% RA 5mm	2H410	7R

C29	ELST 1U0 50V 20% RA	2N510	8R
C30	ELST 22U 63V ELECT	2N622	7R
C30	ELLL 47U 10V ELECT	2R647	A1
C30	ELEC 10U 25V CERAFINE	2P610CC	8R
C101	ELST 100U 100V	2N710B	7R
C102	PEST 47N 63V 10%	2K347	7R
C103	PCRB 100N 100V 5% RA 5mm	2H410	7R
C104	PEST 47N 63V 10%	2K347	7R
C105	PSTY 33P 160V ENCAP 1PF%	2F033	7R
C107	PPRO 4N7 63V 5% RA	2D247N	7R
C108	PPRO 100P 63V 5% RA	2D110N	7R
C109	ELST 100U 25V	2N710	A1
C110	ELST 22U 20V OSCON	2P622	7R
C110	ELST 22U 63V ELECT	2N622	A1
C111	ELST 100U 100V	2N710B	7R
C112	ELST 100U 100V	2N710B	7R
C113	PEST 15N 63V 10%	2K315	7R
C114	PEST 15N 63V 10%	2K315	7R
C116	ELST 100U 25V	2N710	7R
C117	CERD 470P 63V 20% RA	2A147	7R
C118	CERD 1N0 63V 20% RA	2A210	7R
C119	ELST 1U0 50V 20% RA	2N510	7R
C120	CERD 470P 63V 20% RA	2A147	7R
C121	ELST 1U0 50V 20% RA	2N510	7R
C122	ELST 100U 25V	2N710	7R
C123	ELST 100U 25V	2N710	7R
C124	PPRO 4N7 63V 5% RA	2D247N	7R
C125	PCRB 100N 100V 5% RA 5mm	2H410	7R
C126	PCRB 100N 100V 5% RA 5mm	2H410	7R
C127	ELST 220U 16V	2N722	7R
C128	PCRB 100N 100V 5% RA 5mm	2H410	7R
C130	ELST 22U 63V ELECT	2N622	7R
C130	ELLL 47U 10V ELECT	2R647	A1
C130	ELEC 10U 25V CERAFINE	2P610CC	8R
C200	CERD 1N0 63V 20% RA	2A210	7R
C201	SUPPR CAP 4N7 250V	2K247	7R
C204	ELST 10m 50V RA 32mm	2N910	7R
C204	ELST 6M8 35V RA	2N868	A1
C205	ELST 10m 50V RA 32mm	2N910	7R

C205	ELST 6M8 35V RA	2N868	A1
C206	PCRB 100N 100V 5% RA 5mm	2H410	7R
C207	PCRB 100N 100V 5% RA 5mm	2H410	7R
C208	PPRO 4N7 63V 5% RA	2D247N	7R
C209	PPRO 4N7 63V 5% RA	2D247N	7R
C210	ELST 10U 50V	2N610	7R
C211	ELST 10U 50V	2N610	7R
C212	CERD 10N 63V 20% RA	2A310	7R
C213	CERD 10N 63V 20% RA	2A310	7R
C214	CERD 10N 63V 20% RA	2A310	7R
C215	CERD 10N 63V 20% RA	2A310	7R
C216	CERD 10N 63V 20% RA	2A310	7R
C217	CERD 10N 63V 20% RA	2A310	7R
C301	CERD 10N 63V 20% RA	2A310	7R
C302	CERD 10N 63V 20% RA	2A310	7R
C502	PCRB 100N 100V 5% RA 5mm	2H410	A1
C303	CERD 1N0 63V 20% RA	2A210	7R
C304	CERD 1N0 63V 20% RA	2A210	7R
C305	CERD 47P 63V -20% +80% RA	2A047	7R
C306	CERD 47P 63V -20% +80% RA	2A047	7R
C401	ELST 10U 50V	2N610	7R
C402	PEST 220N 63V 10%	2K422	7R
C402	PCRB 100N 100V 5% RA 5mm	2H410	A1
C403	PCRB 100N 100V 5% RA 5mm	2H410	A1
C403	PEST 220N 63V 10%	2K422	7R
C404	PPRO 4N7 63V 5% RA	2D247N	7R
C404	2N2 PP	2D222	A1
C405	ELST 10U 50V	2N610	7R
C406	CERD 100P 63V 20% RA	2A110	7R
C407	CERD 100P 63V 20% RA	2A110	7R
C408	CERD 10P 63V 20% RA	2A010	7R
C501	ELST 10U 50V	2N610	7R
C502	PEST 220N 63V 10%	2K422	7R
C503	PEST 220N 63V 10%	2K422	7R
C503	PCRB 100N 100V 5% RA 5mm	2H410	A1
C504	PPRO 4N7 63V 5% RA	2D247N	7R
C504	2N2 PP	2D222	A1
C505	ELST 10U 50V	2N610	7R

C506	CERD 100P 63V 20% RA	2A110	7R
C507	CERD 100P 63V 20% RA	2A110	7R
C508	CERD 10P 63V 20% RA	2A010	7R
C601	PPRO 100P 63V 5% RA	2D110N	7R
C602	CERD 47P 63V 20% RA	2A047	7R
C603	ELST 22U 63V	2N622	7R
C604	PPRO 4N7 63V 5% RA	2D247N	7R
C605	PPRO 1N3 63V 5% RA	2D213N	7R
C606	ELST 10U 50V	2N610	7R
C701	PPRO 100P 63V 5% RA	2D110N	7R
C702	CERD 47P 63V 20% RA	2A047	7R
C703	ELST 22U 63V	2N622	7R
C704	PPRO 4N7 63V 5% RA	2D247N	7R
C705	PPRO 1N3 63V 5% RA	2D213N	7R
C706	ELST 10U 50V	2N610	7R
C801	PPRO 100P 63V 5% RA	2D110N	7R
C802	PPRO 100P 63V 5% RA	2D110N	7R
C803	ELST 10U 50V	2N610	7R
C804	ELST 10U 50V	2N610	7R
C805	CERD 10N 63V 20% RA	2A310	7R
C806	CERD 10N 63V 20% RA	2A310	7R
C901	CERD 10N 63V 20% RA	2A310	7R
C902	ELST 220U 16V	2N722	7R
C903	CERD 10N 63V 20% RA	2A310	7R
C904	CERD 10N 63V 20% RA	2A310	7R
C905	CERD 10N 63V 20% RA	2A310	7R
C906	CERD 10N 63V 20% RA	2A310	7R
C907	ELST 1M0 25V	2N810	7R
C1000	CERD 10N 63V 20% RA	2A310	7R
CL1	ALPHA AMP 7/8 HEATS NK CLAMP	E82201	7R
CL2	ALPHA AMP 7/8 HEATS NK CLAMP	E82201	7R
D1	RECT FIER 1N4003F 1A 200V	3B4003	7R
D2	ZENER 10V 400MW	3C11004	7R
D3	ZENER 10V 400MW	3C11004	7R
D4	ZENER 10V 400MW	3C11004	7R
D5	SSDIODE 1N4148 75V	3A4148	7R
D6	RECT FIER 1N4003F 1A 200V	3B4003	8R
D7	SSDIODE 1N4148 75V	3A4148	7R
D8	RECT FIER 1N4003F 1A 200V	3B4003	7R

D9	RECT F ER 1N4003F 1A 200V	3B4003	7R
D10	ZENER 5V6 400MW	3C05604	8R
D101	RECT F ER 1N4003F 1A 200V	3B4003	7R
D102	ZENER 10V 400MW	3C11004	7R
D103	ZENER 10V 400MW	3C11004	7R
D104	ZENER 10V 400MW	3C11004	7R
D105	RECT F ER 1N4003F 1A 200V	3B4003	7R
D106	RECT F ER 1N4003F 1A 200V	3B4003	7R
D107	RECT F ER 1N4003F 1A 200V	3B4003	7R
D108	ZENER 5V6 400MW	3C05604	7R
D201	ULTRAFAST RECT F ER DIODE UF5403 3A	3B5403F	7R
D202	ULTRAFAST RECT F ER DIODE UF5403 3A	3B5403F	7R
D203	ULTRAFAST RECT F ER DIODE UF5403 3A	3B5403F	7R
D204	ULTRAFAST RECT F ER DIODE UF5403 3A	3B5403F	7R
D801	ZENER 5V6 400MW	3C05604	7R
D802	ZENER 4V7 400MW	3C04704	7R
D803	SSDIODE 1N4148 75V	3A4148	7R
D901	RECT F ER 1N4003F 1A 200V	3B4003	7R
D902	ZENER 5V6 400MW	3C05604	7R
D903	RECT F ER 1N4003F 1A 200V	3B4003	7R
D904	ZENER 5V6 400MW	3C05604	7R
D905	SSDIODE 1N4148 75V	3A4148	7R
EL1	FUSE CLIP WCK-180-01A	F062	7R
FS201	INS COVER PCB FUSEHOLDER	F022	7R
FS201	FUSE 20mm 1.25A AS	C12126	7R
FS201	FUSEHOLDER 20mm PCB	8S004	7R
FS202	FUSEHOLDER 20mm PCB	8S004	7R
FS202	INS COVER PCB FUSEHOLDER	F022	7R
HS1	ALPHA AMP 7/8 HEATS NK	E81801	7R
HS1	SIL PAD - 25 X 12.5mm	E817MC	7R
HS1	ALPHA AMP 7/8 HS CLIP	E810MC	7R
HS2	SIL PAD - 25 X 12.5mm	E817MC	7R
HS2	ALPHA AMP 7/8 HEATS NK	E81801	7R
HS2	ALPHA AMP 7/8 HS CLIP	E810MC	7R
HS3	SIL PAD - 25 X 12.5mm	E817MC	7R

HS3	ALPHA AMP 7/8 HEATS NK	E81801	7R
HS3	ALPHA AMP 7/8 HS CL P	E810MC	7R
HS4	S L PAD - 25 X 12.5mm	E817MC	7R
HS4	ALPHA AMP 7/8 HS CL P	E810MC	7R
HS4	ALPHA AMP 7/8 HEATS NK	E81801	7R
L1	NDUCT 2U2 12x20mm	7D002B	7R
L101	NDUCT 2U2 12x20mm	7D002B	7R
LED201	LED RED/GREEN 5MM	3D002	7R
LK19	RES MF W4 3K3 1%	1H233	7R
LK19A	A8R AMP MBD TO AV SWITCH CABLE	L835CA	8R
LK20	RES MF W4 3K3 1%	1H233	7R
LK311	7-WAY RIBBON 250mm	L825CA	7R
LK805	JUMPER 3 WAY x 125mm	L815CA	7R
LK901	JUMPER 8-WAY LEAD	L809CA	7R
LK902	JUMPER 3 WAY x 125mm	L815CA	7R
MS	MA NS SWITCH SPACER	E66901	7R
PCB	PR NTED CIRCUIT BOARD	L846PB	7R
Q1	TRANS PWR MOSFET RF540/SMF045	4K045	7R
Q2	TRANS PWR MOSFET RF540/SMF045	4K045	7R
Q3	TRANS LF SS P BC556B	4A556	7R
Q4	TRANS LF SS N BC546B	4A546	7R
Q5	TRANS LF SS P BC556B	4A556	7R
Q6	TRANS LF SS P BC556B	4A556	7R
Q7	TRANS LF SS P BC556B	4A556	7R
Q8	TRANS LF SS N BC546B	4A546	7R
Q9	TRANS LF SS N BC546B	4A546	7R
Q10	TRANS LF SS N BC547B	4A547	7R
Q11	TRANS LF SS N BC547B	4A547	7R
Q12	TRANS LF SS N BC547B	4A547	7R
Q13	TRANS LF SS N BC547B	4A547	7R
Q14	TRANS LF SS P BC557B	4A557	7R
Q15	TRANS LF SS N BC546B	4A546	7R
Q16	TRANS LF SS P BC557B	4A557	7R
Q17	TRANS LF SS N BC546B	4A546	7R
Q18	TRANS LF SS N BC546B	4A546	7R
Q19	TRANS LF SS P BC556B	4A556	7R
Q101	TRANS PWR MOSFET RF540/SMF045	4K045	7R
Q102	TRANS PWR MOSFET RF540/SMF045	4K045	7R
Q103	TRANS LF SS P BC556B	4A556	7R

Q104	TRANS LF SS N BC546B	4A546	7R
Q105	TRANS LF SS P BC556B	4A556	7R
Q106	TRANS LF SS P BC556B	4A556	7R
Q107	TRANS LF SS P BC556B	4A556	7R
Q108	TRANS LF SS N BC546B	4A546	7R
Q110	TRANS LF SS N BC547B	4A547	7R
Q111	TRANS LF SS N BC547B	4A547	7R
Q112	TRANS LF SS N BC547B	4A547	7R
Q113	TRANS LF SS N BC547B	4A547	7R
Q114	TRANS LF SS P BC557B	4A557	7R
Q115	TRANS LF SS N BC546B	4A546	7R
Q116	TRANS LF SS P BC557B	4A557	7R
Q117	TRANS LF SS N BC546B	4A546	7R
Q118	TRANS LF SS N BC546B	4A546	7R
Q119	TRANS LF SS N BC546B	4A546	7R
Q120	TRANS LF SS N 2SC2547	4A2546	7R
PL1	16 WAY DIL PIN HEADER	8K6316	8P
R1A	RES MO 3W 5% 0R22 KOASPR3	1Q922	7R
R1	RES MO 3W 5% 0R22 KOASPR3	1Q922	7R
R2	RES CF W2 4R7 5%	1D847	7R
R3	RES CF W4 5% 2R2	1B822	7R
R4	RES MF FU W3 100R 5% NFR25	1G110	7R
R5	RES MF FU W3 100R 5% NFR25	1G110	7R
R6	RES MF FU W3 100R 5% NFR25	1G110	7R
R7	RES MF FU W3 470R 5% NFR25	1G147	7R
R8	RES MF FU W3 470R 5% NFR25	1G147	7R
R9	RES MF FU W3 470R 5% NFR25	1G147	7R
R10	RES MF FU W3 470R 5% NFR25	1G147	7R
R11	RES MF FU W3 470R 5% NFR25	1G147	7R
R12	RES MF FU W3 470R 5% NFR25	1G147	7R
R13	RES MF W4 1% 1K0	1H210	7R
R14	RES MF W4 1% 1K0	1H210	7R
R15	RES CF W4 5% 1K0	1B210	7R
R16	RES MF W4 1% 2K7	1H227	7R
R17	RES MF W4 1% 5K6	1H256	7R
R18	RES MF W4 1% 2K7	1H227	7R

R19	RES CF W4 5% 5K6	1B256	7R
R20	RES MF W4 1% 15K	1H315	7R
R21	RES MF W4 1% 100R	1H110	7R
R22	RES MF W4 1% 120R	1H112	7R
R23	RES MF W4 1% 2K7	1H227	7R
R24	RES MF W4 1% 2K7	1H227	7R
R25	RES MF W4 1% 330R	1H133	7R
R26	RES MF FU W3 470R 5% NFR25	1G147	7R
R27	RES MF FU W3 470R 5% NFR25	1G147	7R
R28	RES MF W4 18K 1%	1H318	7R
R29	RES MF W4 1% 1K2	1H212	7R
R30	RES MF W4 1% 33K	1H333	7R
R31	RES CF W4 5% 1K0	1B210	A1
R32	RES MF W4 1% 33K	1H333	A1
R33	RES MF W4 1% 680K	1H468	A1
R34	RES MF W4 1% 1K0	1H210	7R
R34	RES MF W4 1K6 1%	1H216	A1
R35	RES MF W4 1% 33K	1H333	7R
R36	RES MF FU W3 100R 5% NFR25	1G110	7R
R39	RES MF W4 18K 1%	1H318	7R
R40	RES MF W4 1% 33K	1H333	A1
R41	RES MF FU W3 470R 5% NFR25	1G147	7R
R42	RES MF W4 1% 620R	1H162	7R
R43	RES MF W4 1% 22K	1H322	8R
R44	RES MF W4 1% 68K	1H368	7R
R45	RES MF W4 18K 1%	1H318	7R
R46	RES MF W4 1% 150R	1H115	7R
R47	RES MF W4 1% 4K7	1H247	7R
R48	RES MF W4 1% 47K	1H347	7R
R49	RES CF 1W 330R 5%	1E133	7R
R50	RES CF W2 100R 5%	1D110	7R
R51	RES MF W4 1% 15K	1H315	7R
R52	RES MF W4 1% 3K9	1H239	7R
R53	RES MF W4 18K 1%	1H318	7R
R54	RES MF W4 1% 68K	1H368	7R
R55	RES MF W4 1% 22K	1H322	7R
R56	RES MF W4 1% 22K	1H322	7R
R57	RES CF 1W 2K7 5%	1E227	8R
R58	RES MF W4 1% 1K8	1H218	7R

R61	RES MF W4 18K 1%	1H318	7R
R62	RES MF W4 18K 1%	1H318	7R
R63	RES MF W4 1% 56K	1H356	8R
R64	RES MF W4 1% 56K	1H356	8R
R70	RES MF W4 1% 680R	1H168	7R
R101A	RES MO 3W 5% 0R22 KOASPR3	1Q922	7R
R101	RES MO 3W 5% 0R22 KOASPR3	1Q922	7R
R102	RES CF W2 4R7 5%	1D847	7R
R103	RES CF W4 5% 2R2	1B822	7R
R104	RES MF FU W3 100R 5% NFR25	1G110	7R
R105	RES MF FU W3 100R 5% NFR25	1G110	7R
R106	RES MF FU W3 100R 5% NFR25	1G110	7R
R107	RES MF FU W3 470R 5% NFR25	1G147	7R
R108	RES MF FU W3 470R 5% NFR25	1G147	7R
R109	RES MF FU W3 470R 5% NFR25	1G147	7R
R110	RES MF FU W3 470R 5% NFR25	1G147	7R
R111	RES MF FU W3 470R 5% NFR25	1G147	7R
R112	RES MF FU W3 470R 5% NFR25	1G147	7R
R113	RES MF W4 1% 1K0	1H210	7R
R114	RES MF W4 1% 1K0	1H210	7R
R115	RES CF W4 5% 1K0	1B210	7R
R116	RES MF W4 1% 2K7	1H227	7R
R117	RES MF W4 1% 5K6	1H256	7R
R118	RES MF W4 1% 2K7	1H227	7R
R119	RES CF W4 5% 5K6	1B256	7R
R120	RES MF W4 1% 15K	1H315	7R
R121	RES MF W4 1% 100R	1H110	7R
R122	RES MF W4 1% 120R	1H112	7R
R123	RES MF W4 1% 2K7	1H227	7R
R124	RES MF W4 1% 2K7	1H227	7R
R125	RES MF W4 1% 330R	1H133	7R
R126	RES MF FU W3 470R 5% NFR25	1G147	7R
R127	RES MF FU W3 470R 5% NFR25	1G147	7R
R128	RES MF W4 18K 1%	1H318	7R
R129	RES MF W4 1% 1K2	1H212	7R

R130	RES MF W4 1% 33K	1H333	7R
R131	RES CF W4 5% 1K0	1B210	A1
R132	RES MF W4 1% 33K	1H333	A1
R133	RES MF W4 1% 680K	1H468	A1
R134	RES MF W4 1% 1K0	1H210	7R
R134	RES MF W4 1K6 1%	1H216	A1
R135	RES MF W4 1% 33K	1H333	7R
R136	RES MF FU W3 100R 5% NFR25	1G110	7R
R139	RES MF W4 18K 1%	1H318	7R
R140	RES MF W4 1% 33K	1H333	A1
R141	RES MF FU W3 470R 5% NFR25	1G147	7R
R142	RES MF W4 1% 620R	1H162	7R
R145	RES MF W4 18K 1%	1H318	7R
R146	RES MF W4 1% 150R	1H115	7R
R147	RES MF W4 1% 4K7	1H247	7R
R149	RES CF 1W 330R 5%	1E133	7R
R150	RES CF W2 100R 5%	1D110	7R
R151	RES MF W4 1% 15K	1H315	7R
R152	RES MF W4 1% 3K9	1H239	7R
R153	RES MF W4 1% 47K	1H347	7R
R154	RES MF W4 1% 47K	1H347	7R
R155	RES MF W4 1% 47K	1H347	7R
R156	RES MF FU W3 470R 5% NFR25	1G147	7R
R157	RES MF W4 1% 100K	1H410	7R
R158	RES MF W4 1% 47K	1H347	7R
R159	RES MF W4 1% 100K	1H410	7R
R160	RES MF W4 10K 1%	1H310	7R
R161	RES CF 1W 1K0 5%	1E210	7R
R161	RES CF 1W 330R 5%	1E133	A1
R162	RES MF W4 1% 47K	1H347	7R
R163	RES MF W4 1% 33K	1H333	7R
R164	RES MF W4 18K 1%	1H318	7R
R165	RES MF W4 1% 47K	1H347	7R
R166	RES CF 1W 2K7 5%	1E227	7R
R167	RES CF 1W 2K7 5%	1E227	7R
R170	RES MF W4 1% 680R	1H168	7R
R201	RES MF FU W3 470R 5% NFR25	1G147	7R
R202	RES MF FU W3 470R 5% NFR25	1G147	7R

R203	RES MF FU W3 470R 5% NFR25	1G147	7R
R204	RES MF FU W3 470R 5% NFR25	1G147	7R
R205	RES MF FU W3 470R 5% NFR25	1G147	7R
R206	RES MF FU W3 470R 5% NFR25	1G147	7R
R207	RES MF W4 1% 100R	1H110	7R
R401	RES MF W4 1% 1K8	1H218	7R
R402	RES MF W4 1% 47K	1H347	7R
R403	RES MF W4 1% 2K2	1H222	7R
R404	RES MF W4 6K8 1%	1H268	7R
R405	RES MF W4 1% 4K7	1H247	7R
R406	RES MF W4 1% 220R	1H122	7R
R406	RES MF W4 470R 1%	1H147	A1
R407	RES MF W4 1% 4K7	1H247	7R
R407	RES MF W4 12K 1%	1H312	A1
R408	RES MF W4 1% 4K7	1H247	7R
R408	RES MF W4 12K 1%	1H312	A1
R409	RES MF W4 3K3 1%	1H233	7R
R409	RES MF W4 6K8 1%	1H268	A1
R410	RES MF W4 3K3 1%	1H233	7R
R410	RES MF W4 6K8 1%	1H268	A1
R411	RES MF W4 1% 4K7	1H247	7R
R411	RES MF W4 10K 1%	1H310	A1
R412	RES MF W4 1% 10K	1H310	7R
R412	RES MF W4 18K 1%	1H318	A1
R415	RES MF W4 3K3 1%	1H233	7R
R416	RES MF W4 1% 1K8	1H218	7R
R501	RES MF W4 1% 1K8	1H218	7R
R502	RES MF W4 1% 47K	1H347	7R
R503	RES MF W4 1% 2K2	1H222	7R
R504	RES MF W4 6K8 1%	1H268	7R
R505	RES MF W4 1% 4K7	1H247	7R
R506	RES MF W4 1% 220R	1H122	7R
R506	RES MF W4 470R 1%	1H147	A1
R507	RES MF W4 1% 4K7	1H247	7R
R507	RES MF W4 12K 1%	1H312	A1
R508	RES MF W4 1% 4K7	1H247	7R
R508	RES MF W4 12K 1%	1H312	A1
R509	RES MF W4 3K3 1%	1H233	7R
R509	RES MF W4 6K8 1%	1H268	A1

R510	RES MF W4 3K3 1%	1H233	7R
R510	RES MF W4 6K8 1%	1H268	A1
R511	RES MF W4 1% 4K7	1H247	7R
R511	RES MF W4 10K 1%	1H310	A1
R512	RES MF W4 1% 10K	1H310	7R
R512	RES MF W4 18K 1%	1H318	A1
R515	RES MF W4 3K3 1%	1H233	7R
R516	RES MF W4 1% 1K8	1H218	7R
R601	RES MF W4 1% 47K	1H347	7R
R602	RES MF W4 1% 470R	1H147	7R
R603	RES MF W4 1% 680K	1H468	7R
R604	RES MF W4 1% 56K	1H356	7R
R605	RES MF W4 1% 820R	1H182	7R
R701	RES MF W4 1% 47K	1H347	7R
R702	RES MF W4 1% 470R	1H147	7R
R703	RES MF W4 1% 680K	1H468	7R
R704	RES MF W4 1% 56K	1H356	7R
R705	RES MF W4 1% 820R	1H182	7R
R801	RES MF W4 1% 4K7	1H247	7R
R801	RES MF W4 560R 1%	1H156	8P
R802	RES MF W4 1% 100K	1H410	7R
R802	RES MF W4 3K9 1%	1H239	8P
R803	RES MF W4 1% 2K4	1H224	7R
R804	RES MF W4 1% 5K6	1H256	7R
R805	RES MF W4 1% 4K7	1H247	7R
R805	RES MF W4 560R 1%	1H156	8P
R806	RES MF W4 1% 100K	1H410	7R
R806	RES MF W4 3K9 1%	1H239	8P
R807	RES MF W4 1% 2K4	1H224	7R
R808	RES MF W4 1% 5K6	1H256	7R
R809	RES MF W4 1% 100K	1H410	7R
R810	RES MF W4 1% 100K	1H410	7R
R811	RES MF W4 1% 220R	1H122	7R
R812	RES MF W4 1% 220R	1H122	7R
R813	RES MF W4 1% 22K	1H322	7R
R814	RES MF W4 1% 22K	1H322	7R
R815	RES MF W4 1% 1K2	1H212	7R
R816	RES MF W4 1% 1K2	1H212	7R
R817	RES MF W4 18K 1%	1H318	7R
R818	RES MF W4 1% 8K2	1H282	8P
R819	RES MF W4 1% 8K2	1H282	8P

R901	RES MF FU W3 1R0 5% NFR25	1G810	7R
R902	RES MF W4 1% 100R	1H110	7R
R903	RES MF W4 1% 100R	1H110	7R
R904	RES MF W4 1% 1K8	1H218	7R
R905	RES MF W4 1% 4K7	1H247	7R
RLY1	RELAY G5Z-2A-E 24V	A207	7R
RLY2	RELAY 960 OHM 51SB12T	A205	8R
RV1	10K PSET	6F310	7R
RV101	10K PSET	6F310	7R
RV301	POT 20KA* 2 LOG A	6A320L	A1
RV302	POT 10KB* 2 LIN	6A310E	7R
RV303	POT 10KB* 2 LIN	6A310E	7R
RV304	POT 10KB* 2 LIN	6A310E	7R
RV901	POT 20KA DUAL 18MM MOTORISED	6A360M	7R
RX1	REMOTE CONTROL RECEIVER SBX1610-62	B2103	7R
SK1	CAMCON BIND NG POST 4WAY NICKEL	8D418	7R
SK1	CANCON B ND NG POST 4WAY GOLD	8D418G	8R/8P
SK2	CAMCON BIND NG POST 4WAY NICKEL	8D418	7R
SK2	CANCON B ND NG POST 4WAY GOLD	8D418G	8R/8P
SK3	STEREO JACK PCB	8D301	7R
SK4	CAGE CLAMP 16A 3 WAY ARC001-236	8Q001	7R
SK5	CAGE CLAMP 16A 1 WAY ARC003-236	8Q003	7R
SK6	CAGE CLAMP 16A 2WAY 236-402/000-009	8Q005	7R
SK7	CAGE CLAMP 16A 3 WAY ARC004-236	8Q004	7R
SK201	IEC MAINS CONN PCB NS PX	8A001	7R
SK301	PHONO SKT 4-WAY EMC	8D224	7R
SK301	PHONO SKT 4-WAY EMC GOLD	8D225	8R/8P
SK302	PHONO SKT 4-WAY EMC	8D224	7R
SK302	PHONO SKT 4-WAY EMC GOLD	8D225	8R/8P
SK303	PHONO SKT 4-WAY EMC	8D224	7R
SK303	PHONO SKT 4-WAY EMC GOLD	8D225	8R/8P
SK304	PHONO SKT 4-WAY EMC	8D224	7R
SK304	PHONO SKT 4-WAY EMC GOLD	8D225	8R/8P
SW1	SWITCH SLIDE 2WAY C/O PANEL MNT PCB	A1403	8R

SW201	SW PUSH MA NS SDDSA32MZU	A1007	7R
SW302	SW PUSH 4PCO	A1013	8R
SW305	SWITCH SRBU 150 44A	A1202	7R
SW305	SWITCH 4POLE SRBU 5WAY	A1212	8R
TX1	ALPHA 7 AMP MULTI VOLTAGE TRANSFORM	L835TX	7R
TX1	ALPHA 1/5.2 TRANSFORMER 230V	L841TX	A1
TX1	ALPHA 8 AMP MULTI VOLTAGE TRANSFORM	L833TX	8R/8P
VOLMOT	JUMPER 2 W LEAD APL5	1Y271	7R
X901	CER RESON CST4.19MG 4.19MHz	7W002	7R
Y1	TX WIRE RESTRAINT	F185	7R
Y2	TX WIRE RESTRAINT	F185	7R
Z201	IC VREG POS 7815	5D7815	7R
Z202	IC VREG NEG 7915	5D7915	7R
Z300	IC AUDIO DUAL 4560D	5B4560	7R
Z301	IC AUDIO DUAL NE5532N	5A5532	A1
Z302	IC AUDIO DUAL 4560D	5B4560	7R
Z303	IC COMPARITOR TA7317P	5M7317	7R
Z304	IC AUDIO DUAL 4560D	5B4560	7R
Z305	IC AUDIO DUAL NE5532N	5A5532	7R
Z305	IC AUDIO DUAL OP275	5B275	8R
Z801	IC HCMOS PC74HC4052P ONLY	5F4052P	7R
Z901	IC SOCKET 18 P N 0 3"	8S018	7R
Z901	IC CMOS MICRO PIC16C54XT/P	5H16C54X	7R
Z902	MOTOR DRIVER 5Q6109	5Q6109	7R

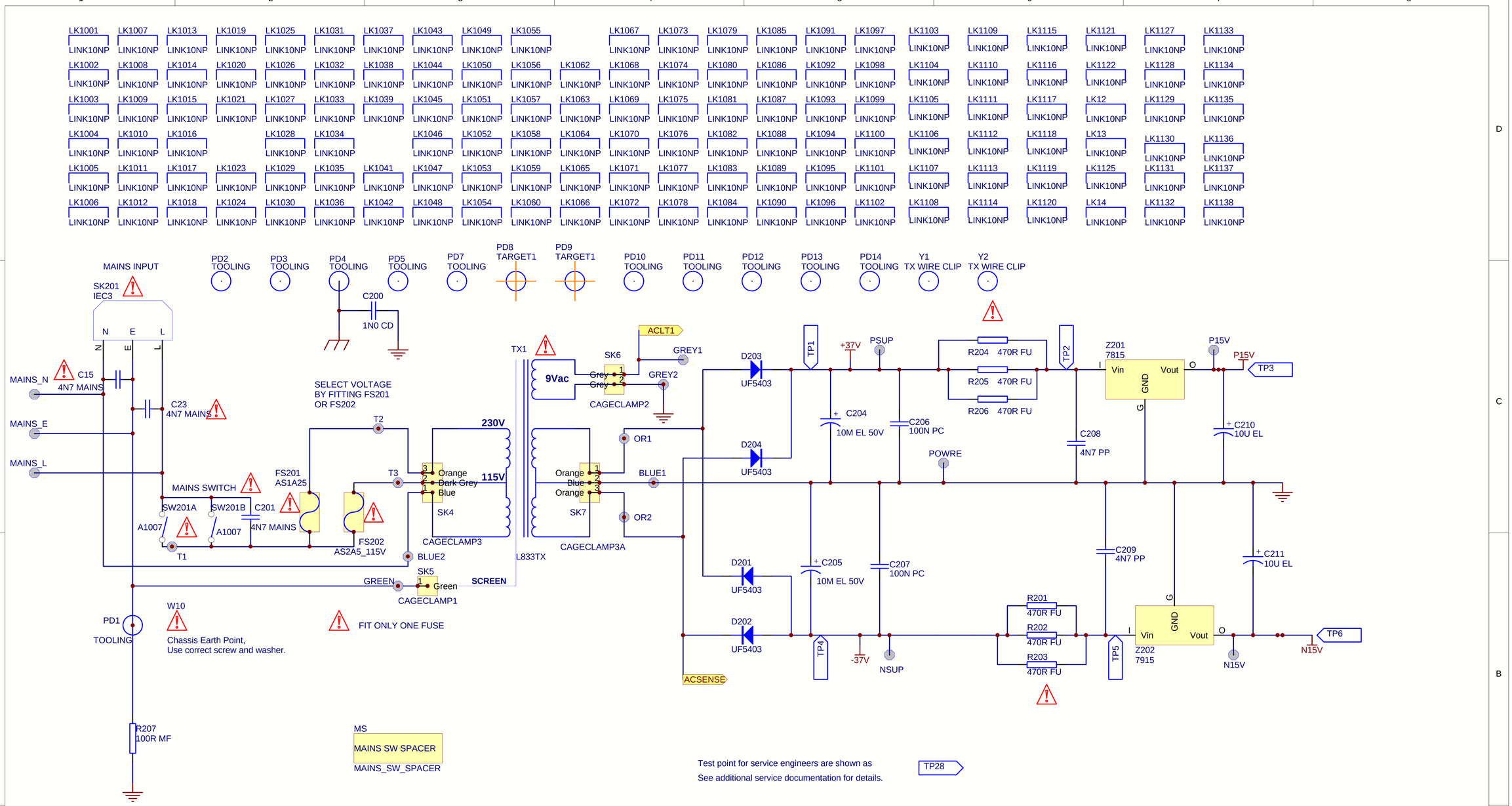

EL1
Spare Fuse Clip
FUSE CLIP

BARCD
BARCODE LABEL
BARCODE

DD3
Drilling Detail
Issue Box
DD_ISSUE

DD4
PCB MATERIAL
CEM1, 2 OZ Cu
CEM1_20Z

PS
Photo Strip
PHOTO_STRIP

DD
Drilling
Detail
DRILL_DWG

DD1
A1 Horizontal
Paper Marker
DD_A1H

DD2
A1 Vertical
Paper Marker
DD_A1V

EL2
Update Box_2
UPDATE_BOX_2

WAF
WAF

PCB
PCB
L846PB

W12
WARNING SAFETY CRITICAL COMPONENT
REPLACE WITH IDENTICAL PART

DRAWING TITLE ALPHA 1,7, 8 & 8P AMP					
2 3 4 2 5 A & R Cambridge Ltd. Pembroke Avenue Denny Industrial Centre Waterbeach Cambridge CB5 9PB	Circuit Diagram Notes: POWER SUPPLY	98_1029	LJW	29-05-98	LISTENING APPROVAL	2
		98_1025	LJW	12-05-98	Initial release	1
		ECO No.	INITIALS	DATE	DESCRIPTION OF CHANGE	ISSUE
	Filename J:\FILES\Products\A1_7_8_8P AMPS\Issue_2\L846C2_3.SCH	Date Printed 22-Sep-1998	Drawn by: LJW	Sheet 2 of 7	DRAWING NO. L846C2_2	

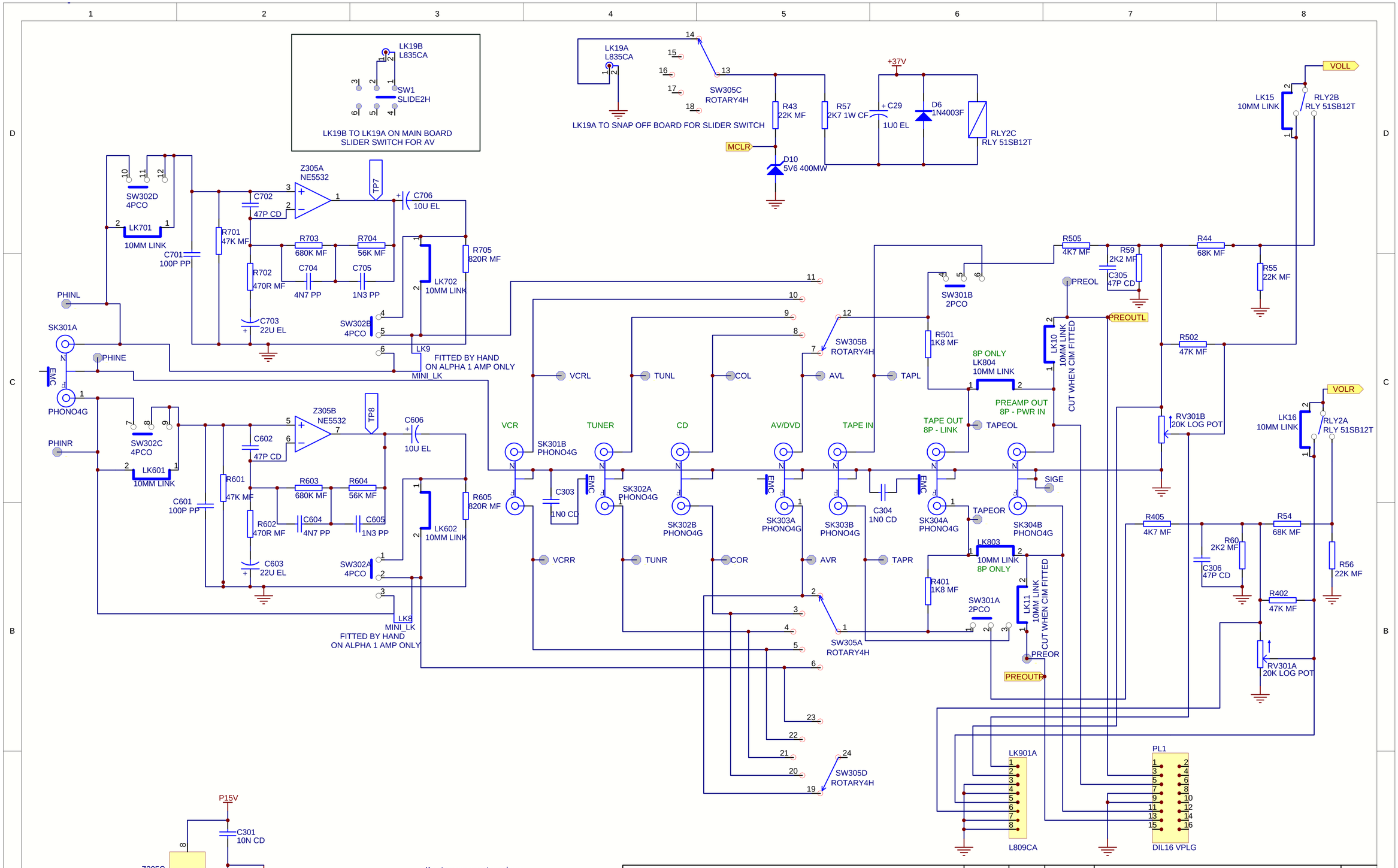

Key to component numbers:

0xx Power amp L
1xx Power amp R
2xx Power supply
3xx ICs / Switches
4xx Tone / balance L
5xx Tone / balance R
6xx MM phono L
7xx MM phono R
8xx Pre amp output L&R
9xx Remote control

DRAWING TITLE

ALPHA 1, 7, 8 & 8P AMP

2 3 4 2 5

A & R Cambridge Ltd.
Pembroke Avenue
Denny Industrial Centre
Waterbeach
Cambridge CB5 9PB

Circuit Diagram

Notes:

PHONO & INPUTS

Filename J:\FILES\Products\A1_7_8_8P AMPS\Issue_2\L846C3_3.SCH

ECO No.	INITIALS	DATE	DESCRIPTION OF CHANGE	ISSUE
98_1029	LJW	29-05-98	LISTENING APPROVAL	2
98_1025	LJW	12-05-98	Initial release	1

Date Printed: 22-Sep-1998 | Drawn by: LJW | Sheet 3 of 7 | DRAWING NO. L846C3_2

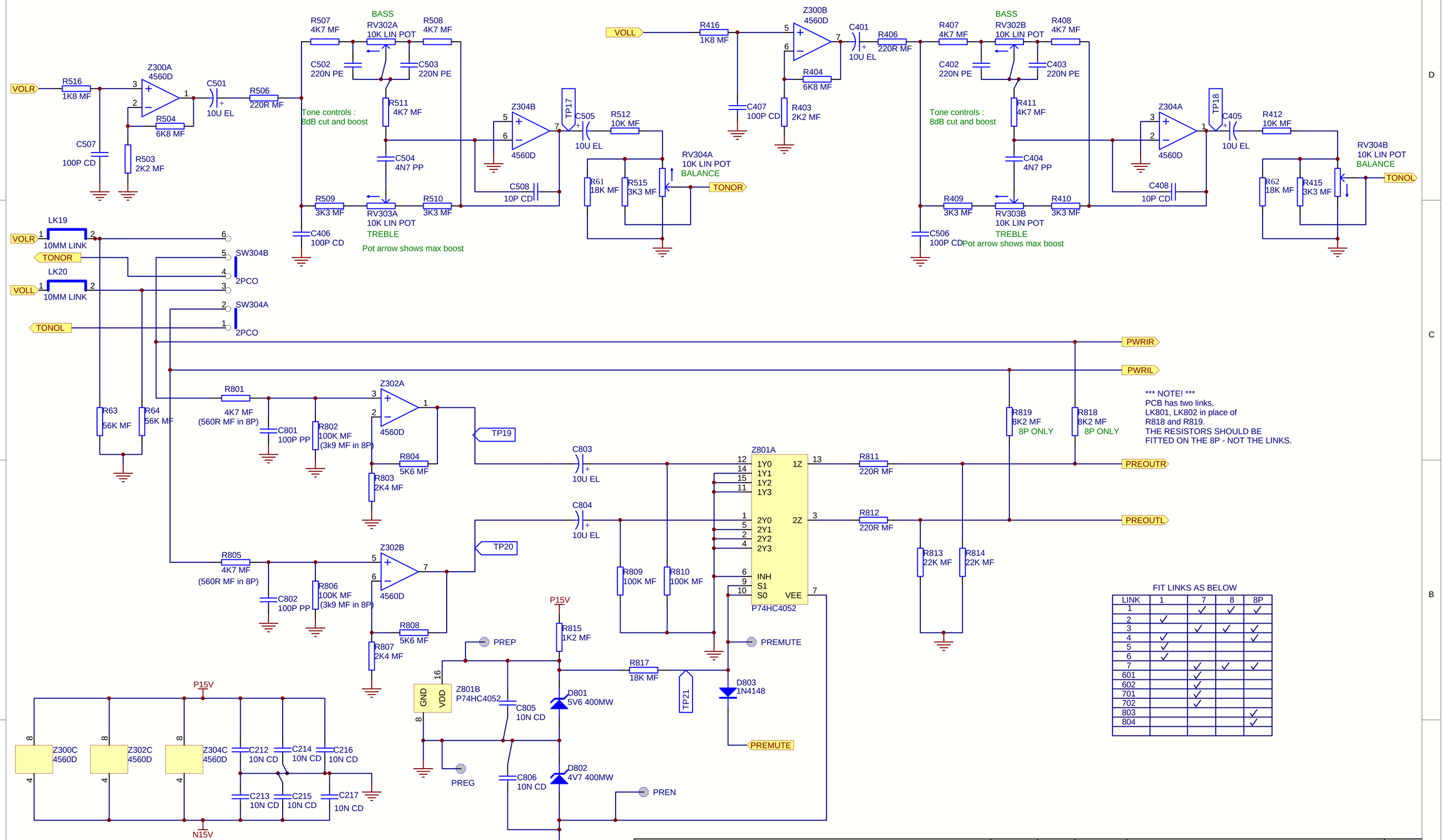

FIT LINKS AS BELOW

LINK	1	7	8	8P
1		✓	✓	✓
2	✓			
3		✓	✓	✓
4	✓			✓
5	✓			
6	✓			
7		✓	✓	✓
601		✓		
602		✓		
701		✓		
702		✓		
803				✓
804				✓

DRAWING TITLE

ALPHA 1, 7, 8 & 8P AMP

2 3 4 2 5

A & R Cambridge Ltd.
Pembroke Avenue
Denny Industrial Centre
Waterbeach
Cambridge CB5 9PB

Circuit Diagram

Notes:

TONE CONTROL

Filename: J:\FILES\Products\A1_7_8_8P AMPS\Issue_2\L846C4_3.SCH

ECO No.	INITIALS	DATE	DESCRIPTION OF CHANGE	ISSUE
98_1029	LJW	29-05-98	LISTENING APPROVAL	2
98_1025	LJW	12-05-98	Initial release	1

Date Printed: 22-Sep-1998 | Drawn by: LJW | Sheet 4 of 7 | DRAWING NO. L846C4_2

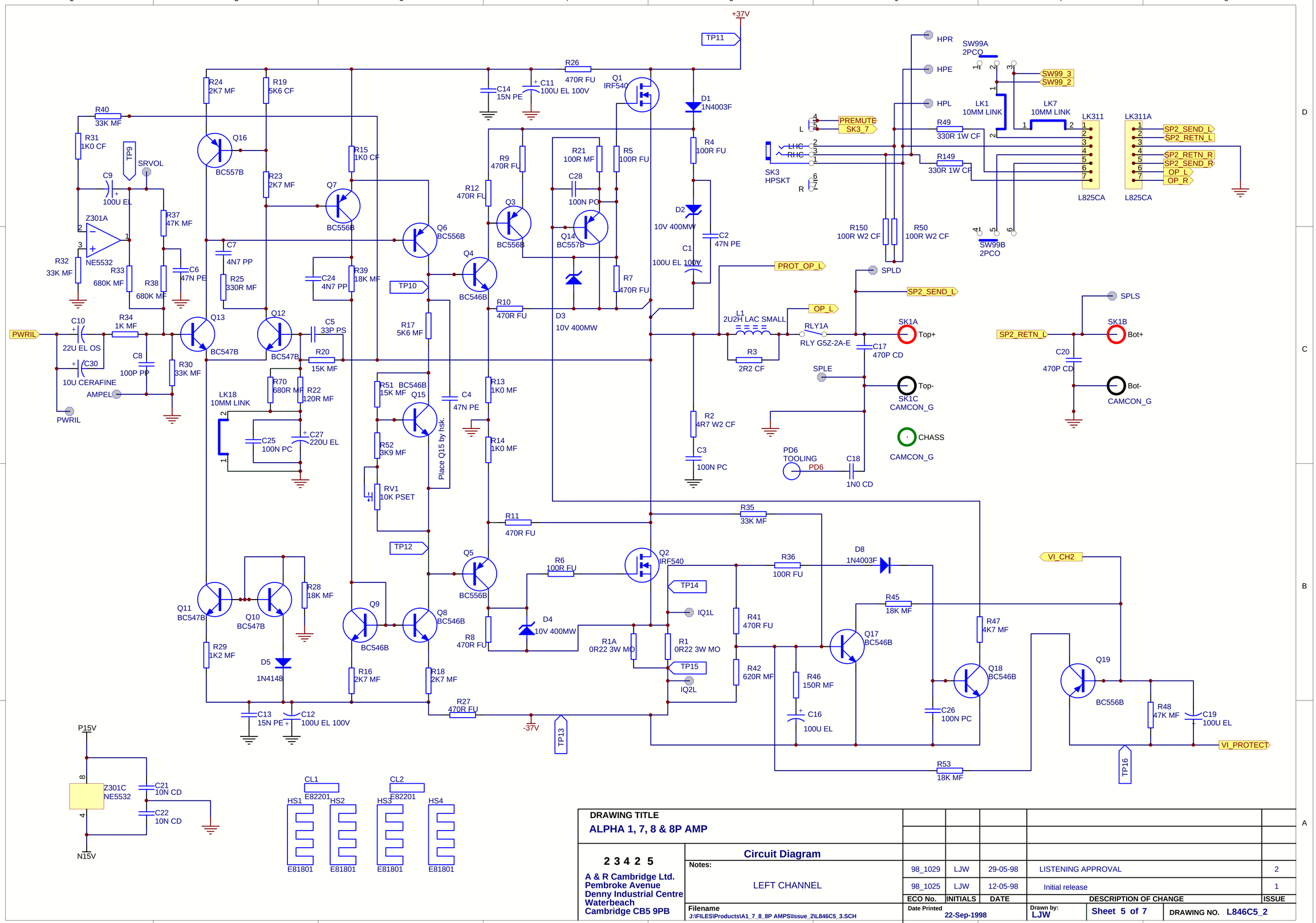

DRAWING TITLE **ALPHA 1, 7, 8 & 8P AMP**					
2 3 4 2 5 **A & R Cambridge Ltd.** **Pembroke Avenue** **Denny Industrial Centre** **Waterbeach** **Cambridge CB5 9PB**	**Circuit Diagram** Notes: LEFT CHANNEL	98_1029	LJW	29-05-98	LISTENING APPROVAL	2
		98_1025	LJW	12-05-98	Initial release	1
		ECO No.	INITIALS	DATE	DESCRIPTION OF CHANGE	ISSUE
	Filename J:\FILES\Products\A1_7_8_8P AMPS\Issue_2\L846C5_3.SCH	Date Printed 22-Sep-1998		Drawn by: LJW	Sheet 5 of 7	DRAWING NO. L846C5_2

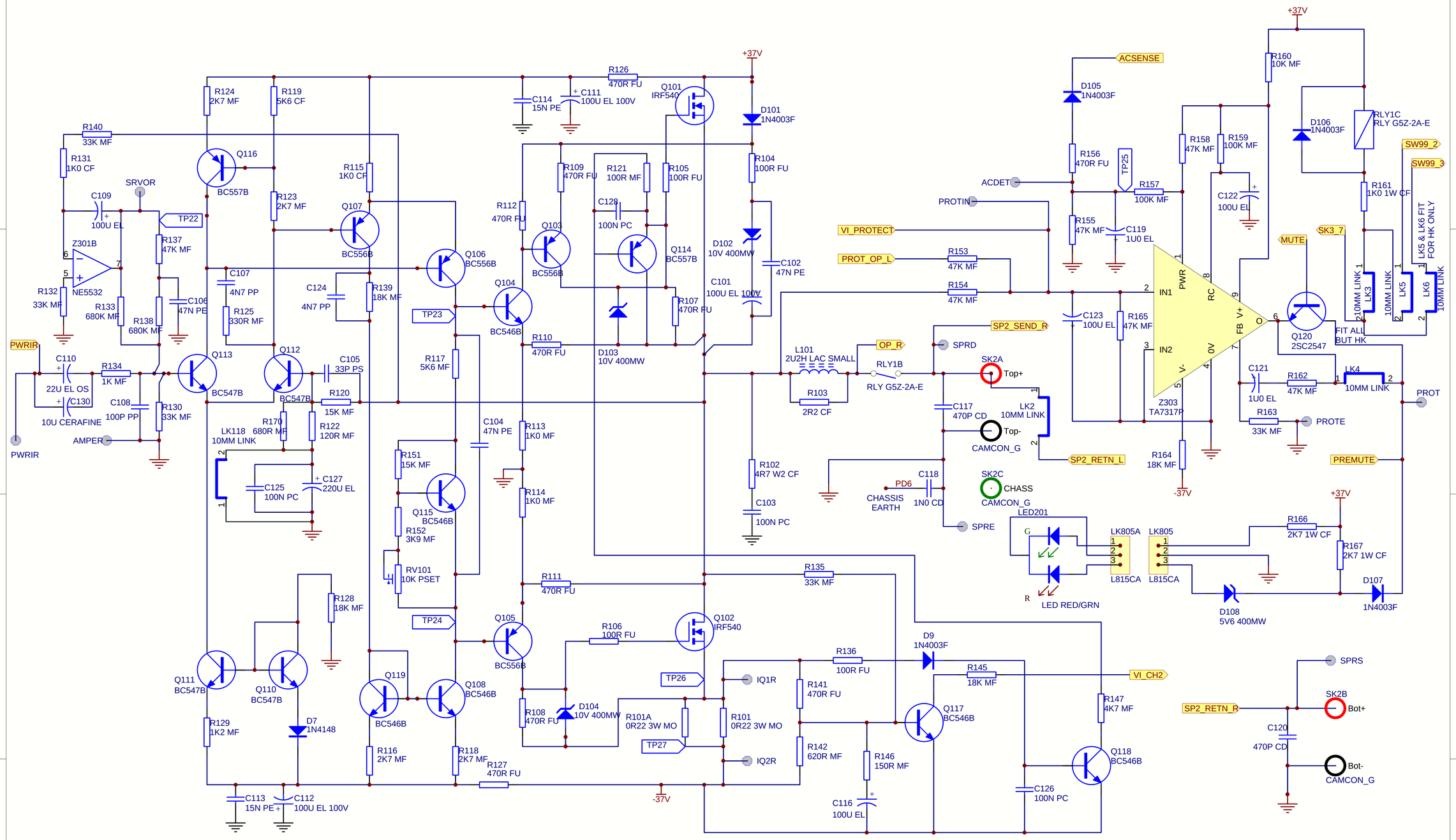

DRAWING TITLE

ALPHA 1, 7, 8 & 8P AMP

Circuit Diagram

2 3 4 2 5

A & R Cambridge Ltd.
Pembroke Avenue
Denny Industrial Centre
Waterbeach
Cambridge CB5 9PB

Notes:

RIGHT CHANNEL

ECO No.	INITIALS	DATE	DESCRIPTION OF CHANGE	ISSUE
98_1029	LJW	29-05-98	LISTENING APPROVAL	2
98_1025	LJW	12-05-98	Initial release	1

Filename J:\FILES\Products\A1_7_8_8P AMPS\Issue_2\L846C6_3.SCH

Date Printed 22-Sep-1998

Drawn by: LJW

Sheet 6 of 7

DRAWING NO. L846C6_2

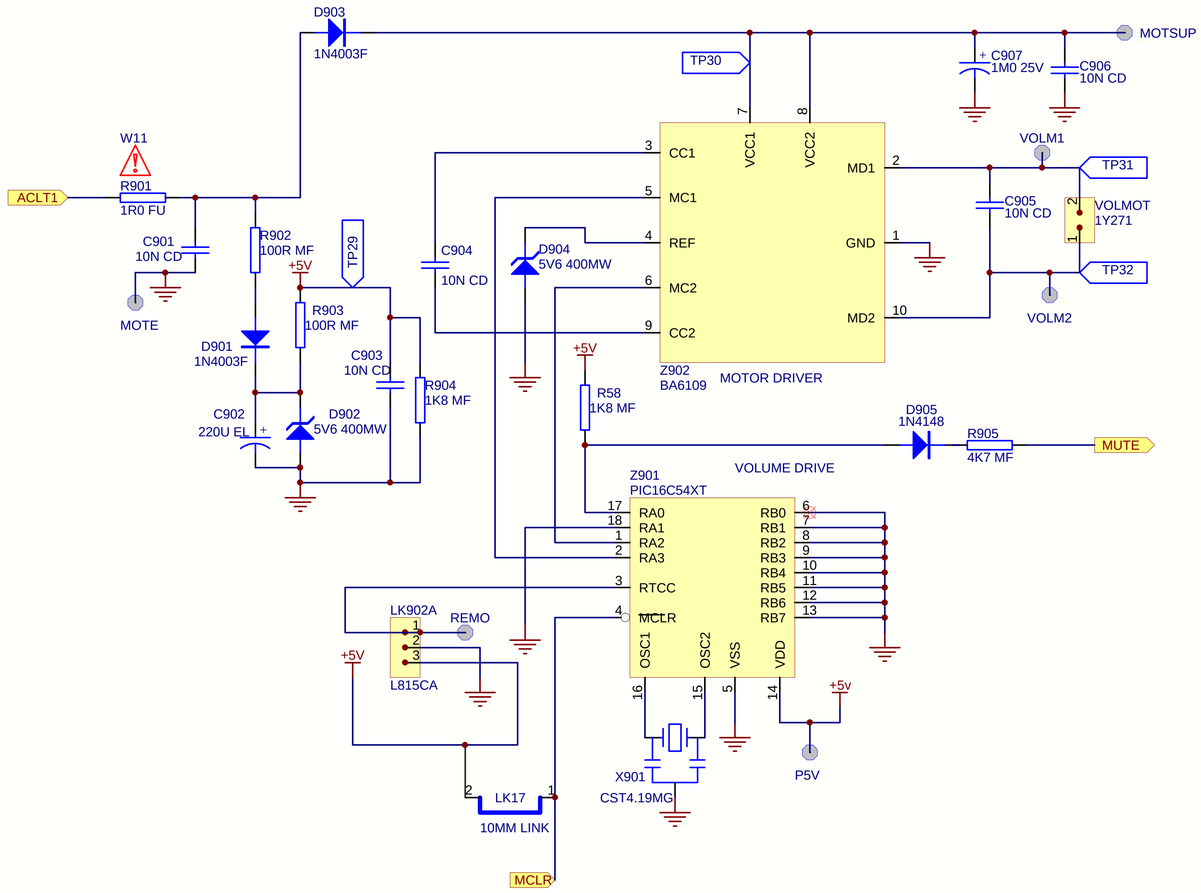

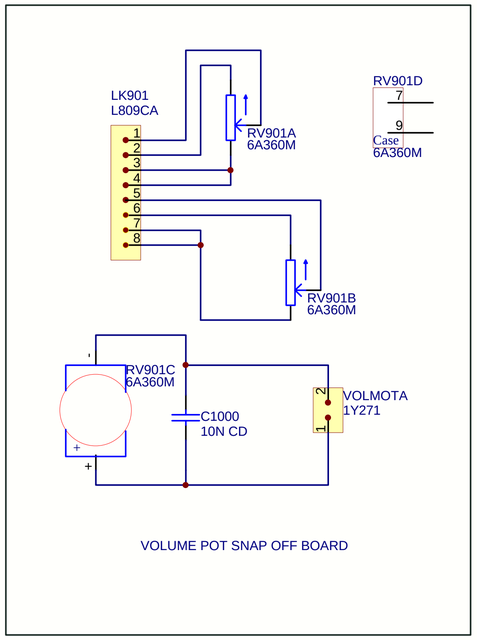

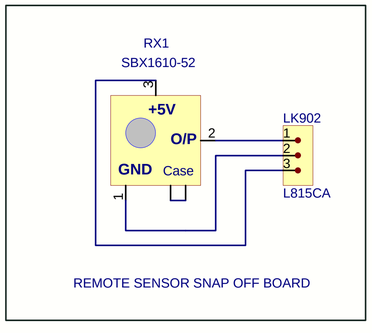

W13
WARNING SAFETY CRITICAL COMPONENT
REPLACE WITH IDENTICAL PART

DRAWING TITLE ALPHA 1, 7, 8 & 8P AMP						
2 3 4 2 5 A & R Cambridge Ltd. Pembroke Avenue Denny Industrial Centre Waterbeach Cambridge CB5 9PB	Circuit Diagram Notes: REMOTE CONTROL	98_1029	LJW	29-05-98	LISTENING APPROVAL	2
		98_1026	LJW	12-05-98	Initial release	1
		ECO No.	INITIALS	DATE	DESCRIPTION OF CHANGE	ISSUE
	Filename J:\FILES\Products\A1_7_8_8P AMPS\Issue_2\L846C7_3.SCH	Date Printed 22-Sep-1998		Drawn by: LJW	Sheet 7 of 7	DRAWING NO. L846C7_2