Fisher® V150E Expanded Outlet Vee-Ball™ Control Valve

Contents

Introduction 1
Scope of Manual 1
Description 1
Specifications 2
Installation 2
Maintenance 5
Packing Maintenance 5
Replacing the HD Ball Seal 7
Bearing and Ball Maintenance 12
Actuator Mounting 15
Determining Mounting Position 16
Determining Closed Position 16
Parts Ordering 16
Parts Kits 21
Parts List 22

Figure 1. Fisher V150E Expanded Outlet Vee-Ball Valve with 2052 Actuator and FIELDVUE™ DVC6200 Digital Valve Controller

W9915

Introduction

Scope of Manual

This instruction manual provides installation, operation, maintenance, and parts information for the Fisher Vee-Ball V150E rotary control valve (see figure 1).

For information on ENVIRO-SEAL™ packing, see the ENVIRO-SEAL Packing System for Rotary Valves instruction manual, D101643X012. Refer to separate manuals for information concerning the actuator, positioner and accessories.

Do not install, operate, or maintain a V150E valve without being fully trained and qualified in valve, actuator, and accessory installation, operation, and maintenance. **To avoid personal injury or property damage, it is important to carefully read, understand, and follow all the contents of this manual, including all safety cautions and warnings.** If you have any questions about these instructions, contact your Emerson Process Management sales office before proceeding.

Description

V150E Vee-Ball valves (figure 1) with a V-notch ball are used in throttling service. The V150E valve is a raised-face flanged construction. The splined valve shaft connects to a variety of Fisher rotary-shaft actuators.

Table 1. Specifications

Valve Sizes and End Connection Styles

DN ■ 80x100, ■ 100x150, ■ 150x200, ■ 200x250, ■ 250x300 and NPS ■ 3x4, ■ 4x6, ■ 6x8, ■ 8x10, ■ 10x12 flanged valves that mate with ■ PN 10/16, ■ JIS 10K, or ■ CL150 raised-face flanges (see table 2)

Dimensions

See table 6 for dimensions

Standard Flow Direction

Forward (into the convex face of the V-notch ball)

Maximum Ball Rotation

90 degrees

Orientation

Valve shaft must be horizontal when installed in a horizontal or vertical pipeline

Actuator Mounting

Standard valve construction is for right-hand mounting, as viewed from upstream end of valve with the shaft horizontal. Actuator can be mounted in any of four quadrants. Left-hand actuator mounting is available upon request

Valve/Actuator Action

With compact 2052 spring and diaphragm or Fisher 1061 piston rotary actuator, the valve is field-reversible between PDTC or PDTO: push-down-to-close (extending actuator rod closes valve) and push-down-to-open (extending actuator rod opens valve)

Approximate Weight

See table 6

1. The pressure/temperature limits in this manual and any applicable standard or code limitation for valve should not be exceeded.

Table 2. Valve Body Material, End Connections, and Ratings

VALVE DESIGN	VALVE BODY MATERIAL	VALVE SIZE	FLANGE END CONNECTIONS
V150E	CG8M	DN 80x100, 100x150, 150x200, 200x250, 250x300	Compatible with PN 10/16 or JIS 10K raised-face flanges
		NPS 3x4, 4x6, 6x8, 8x10, 10x12	Compatible with CL150 raised-face flanges

Specifications

Specifications for these valves are shown in table 1 and in bulletin 51.3:V150E, D103429X012.

Installation

Installation steps are provided in this section for V150E valves. Key numbers in installation procedures are shown in figure 10 unless otherwise indicated.

⚠ WARNING

Always wear protective gloves, clothing, and eyewear when performing any installation operations to avoid personal injury.

Personal injury or equipment damage caused by sudden release of pressure may result if the valve assembly is installed where service conditions could exceed either the valve body rating or the mating pipe flange joint rating. To avoid such injury or damage, provide a relief valve for overpressure protection as required by government or accepted industry codes and good engineering practices.

Check with your process or safety engineer for any additional measures that must be taken to protect against process media.

If installing into an existing application, also refer to the WARNING at the beginning of the Maintenance section in this instruction manual.

⚠ WARNING

When ordered, the valve configuration and construction materials were selected to meet particular pressure, temperature, pressure drop, and controlled fluid conditions. Responsibility for the safety of process media and compatibility of valve materials with process media rests solely with the purchaser and end-user. To avoid possible personal injury and because some valve/trim material combinations are limited in their pressure drop and temperature ranges, do not apply any other conditions to the valve without first contacting your Emerson Process Management sales office.

⚠ WARNING

The valve drive shaft is not necessarily grounded to the pipeline when installed. Personal injury or property damage could result from an explosion caused by a discharge of static electricity from valve components if the process fluid or the atmosphere around the valve is flammable. If the atmosphere around the valve or the process fluid is flammable, electrically bond the drive shaft to the valve.

Note

Standard PTFE packing is composed of a partially conductive carbon-filled PTFE female adaptor with PTFE V-ring packing. Standard graphite packing is composed of all conductive graphite ribbon packing. Alternate shaft-to-valve body bonding is available for hazardous service areas where the standard packing is not sufficient to bond the shaft to the valve (see the following step).

Attach the optional bonding strap assembly (key 131, figure 2) to the valve drive shaft (key 6) with the clamp (key 130, figure 2) and connect the other end of the bonding strap assembly to the valve body with the cap screw (key 23).

1. If the valve is to be stored before installation, protect the flange mating surfaces and keep the valve body cavity dry and free of foreign material.
2. Install a three-valve bypass around the control valve assembly if continuous operation will be necessary during inspection and maintenance of the valve.
3. The valve is normally shipped as part of a control valve assembly, with an actuator mounted on the valve. If the valve and actuator have been purchased separately or if the actuator has been removed, mount the actuator according to the Actuator Mounting section and the appropriate actuator instruction manual.
4. Standard flow direction is with the smaller diameter flange end facing upstream.
5. Install the valve in a horizontal or vertical pipeline with the drive shaft in a horizontal position.

CAUTION

Do not allow the valve to be installed in the pipeline with the drive shaft in the vertical position because of excessive wear to valve component parts.

6. The actuator can be right- or left-hand mounted with the shaft in a horizontal orientation as shown in figure 1. If necessary, refer to the appropriate actuator instruction manual for actuator installation and adjustment procedures.

CAUTION

Ensure the valve and adjacent pipelines are free of foreign material that could damage the valve seating surfaces.

7. Be certain the valve and adjacent pipelines are free of any foreign material that could damage the valve sealing surfaces.
8. Be sure the pipeline flanges are in line with each other.

Figure 2. Optional Shaft-to-Body Bonding Strap Assembly

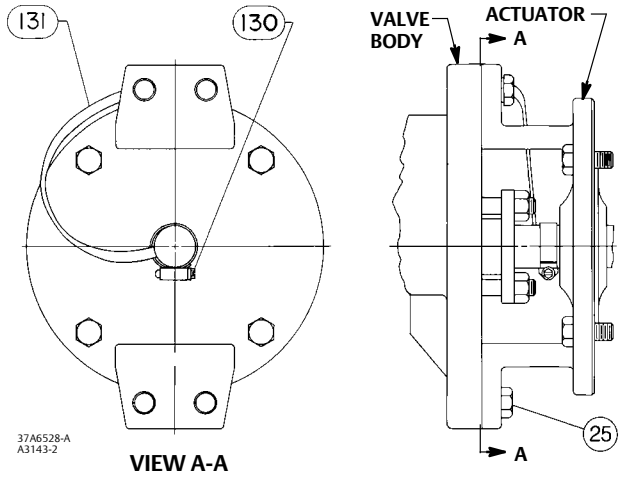

Installing V150E Valves

1. Install the V150E valve using standard length flange studs and nuts, appropriate for the inlet and outlet ends of the valve as dictated by the size and rating of the flange, to connect the valve flanges to the pipeline flanges.
2. Lubricate the studs with anti-seize lubricant.
3. Insert flat-sheet line flange gaskets (or spiral-wound gaskets with compression-controlling center rings) that are compatible with the flowing media.
4. Connect pressure lines to the actuator as indicated in the actuator instruction manual. When an auxiliary manual actuator is used with a power actuator, install a bypass valve on the power actuator (if one is not supplied) for use during manual operation.

⚠ WARNING

Personal injury could result from packing leakage. Valve packing was tightened before shipment; however the packing might require some readjustment to meet specific service conditions. Check with your process or safety engineer for any additional measures that must be taken to protect against process media.

If the valve has ENVIRO-SEAL live-loaded packing installed, this initial re-adjustment will probably not be required. See ENVIRO-SEAL Packing System for Rotary Valves instruction manual, D101643X012, for packing instructions.

Maintenance

Valve parts are subject to normal wear and must be inspected and replaced as necessary. The frequency of inspection and replacement depends upon the severity of service conditions.

Key numbers in this procedure are shown in figure 10, unless otherwise noted.

⚠ WARNING

The Vee-ball closes with a shearing, cutting motion, which could result in personal injury. To avoid injury, keep hands, tools, and other objects away from the Vee-ball while stroking the valve.

Avoid personal injury from sudden release of process pressure. Before performing any maintenance operations:

- **Do not remove the actuator from the valve while the valve is still pressurized.**
- **Disconnect any operating lines providing air pressure, electric power, or a control signal to the actuator. Be sure the actuator cannot suddenly open or close the valve.**
- **Use bypass valves or completely shut off the process to isolate the valve from process pressure. Relieve process pressure from both sides of the valve. Drain the process media from both sides of the valve.**
- **Vent the power actuator loading pressure and relieve any actuator spring precompression.**
- **Use lock-out procedures to be sure that the above measures stay in effect while you work on the equipment.**
- **Always wear protective gloves, clothing, and eyewear when performing any maintenance operations.**
- **The valve packing area may contain process fluids that are pressurized, *even when the valve has been removed from the pipeline*. Process fluids may spray out under pressure when removing the packing hardware or packing rings.**
- **Check with your process or safety engineer for any additional measures that must be taken to protect against process media.**

Packing Maintenance

Key numbers in this procedure are shown in figure 10, unless otherwise noted. A detailed view of the packing is also shown in figure 3.

If the valve is equipped with the ENVIRO-SEAL Packing System, refer to:

- the separate ENVIRO-SEAL Packing System for Rotary Valves instruction manual, D101643X012, for maintenance instructions, and
- the Parts List section of this manual for retrofit kits, parts kits, and individual parts.

If the packing is relatively new and tight on the drive shaft (key 6), and if tightening the packing follower nuts does not stop leakage, it is possible that the drive shaft is worn or nicked so that a seal cannot be made. If the leakage comes from the outside diameter of the packing, it is possible that the leakage is caused by nicks or scratches on the packing box wall. Inspect the drive shaft and packing box wall for nicks or scratches while performing the following procedure.

Replacing Packing

When using this procedure, it is recommended that the actuator **not** be removed from the valve while the valve is still in the pipeline or between flanges. Valve/actuator adjustments must be made with the valve out of the pipeline. Refer to the Determining Closed Position portion of the Actuator Mounting section.

Disassembly

⚠ WARNING

Observe the steps in the WARNING at the beginning of the Maintenance section.

1. Isolate the control valve from the line pressure, release pressure from both sides of the valve body, and drain the process media from both sides of the valve. If using a power actuator, shut off all pressure lines to the power actuator, release pressure from the actuator, and disconnect the pressure lines from the actuator. Use lock-out procedures to be sure that the above measures stay in effect while you are working on the equipment.
2. Remove line bolting, remove the control valve from the pipeline, and place the valve/actuator assembly on a flat surface with the inlet facing up.
3. Remove the actuator cover. Take note of the orientation of the actuator with respect to the valve body and the lever orientation with respect to the valve drive shaft (see figure 9).

⚠ WARNING

When the actuator is removed from the valve, the ball/shaft assembly may suddenly rotate, with a shearing, cutting motion, which could result in personal injury. To avoid injury, carefully rotate the ball to a stable position after the actuator is removed.

CAUTION

When removing the actuator from the valve, do not use a hammer or similar tool to drive the lever or actuator off the valve shaft. Driving the lever or actuator off the valve shaft could damage the ball, seal, and valve.

If necessary, use a puller to remove the lever or actuator from the valve shaft. It is okay to tap the puller screw lightly to loosen lever or actuator, but hitting the screw with excessive force could damage the ball, seal, and valve.

4. Loosen the clamped lever, remove the actuator mounting screws and nuts (keys 23 and 24), and remove the actuator. (If necessary, refer to the actuator instruction manual for assistance.)
5. If applicable, remove the bonding strap assembly before attempting to remove the packing (see figure 2).
6. Remove the packing follower nuts and packing follower (keys 17 and 20). For alloy packing constructions, the packing follower (key 17) and a separate packing flange (key 40) must be removed if present.

If the valve is equipped with the ENVIRO-SEAL packing system, refer to the ENVIRO-SEAL Packing System for Rotary Valves instruction manual, D101643X012, for disassembly.

⚠ WARNING

Personal injury could result from packing leakage. Do not scratch the drive shaft or packing box wall while removing packing parts in the following procedure.

7. Remove the packing parts (see figure 3, keys 16, 17, 35, and 39 depending on construction) using a formed wire hook with a sharp end. Pierce the rings with the sharp end of the hook in order to remove them. Do not scratch the

drive shaft or packing box wall; scratching these surfaces could cause leakage. Clean all accessible metal parts and surfaces to remove particles that would prevent the packing from sealing.

Assembly

If the valve is equipped with the ENVIRO-SEAL packing system, refer to the ENVIRO-SEAL Packing System for Rotary Valves instruction manual, D101643X012, for assembly.

1. To help ensure correct centering of the Vee-ball (key 2) on the seal (key 11), make sure the ball is closed while you install or tighten new packing. Insert a screwdriver, pry bar, or similar tool between the lower ear of the ball and the valve body. Use the pry to move the ball tightly against the bearing on the actuator side of the valve (see figure 4). Keep the ball in that position until you have completed packing installation and adjustment.
2. Install the new packing parts using the parts sequence shown in figure 3. Install the packing follower (key 17).
3. Secure the packing follower with the packing follower nuts (key 20). Tighten the nuts far enough to stop leakage under operating conditions.

Note

If the valve is equipped with a bonding strap assembly (figure 2), re-install the assembly.

4. Reconnect the actuator and lever in accordance with the orientations that were noted in step 3 of the disassembly procedures. If necessary, use figure 9 to identify the correct index marks.
5. Refer to the appropriate actuator instruction manual to complete actuator assembly and adjustment.
6. When the control valve is in operation, check the packing follower for leakage and retighten the packing follower nuts (key 20) as necessary.

Replacing the HD Ball Seal

Perform this procedure if the control valve is not shutting off properly or if seal inspection or replacement is necessary.

The valve / actuator assembly must be removed from the pipeline and the actuator must be removed from the valve to replace the ball seal. Key numbers are shown in figure 13 unless otherwise indicated. Ball Seal assembly details (with key numbers) are also shown in figure 5.

⚠ WARNING

Perform the steps in the WARNING at the beginning of the Maintenance section of this manual.

Removing the HD seal

1. Remove line bolting, remove the control valve from the pipeline, remove the actuator (as discussed in the packing section), and place the valve body on a flat work surface.
   a. **For NPS 3x4 and 4x6 valves,** the ball must be removed to access the seal. See the Bearing and Ball Maintenance Disassembly section on page 12 in this manual. Then return to this procedure and continue with the next steps.

Figure 3. Packing Arrangements

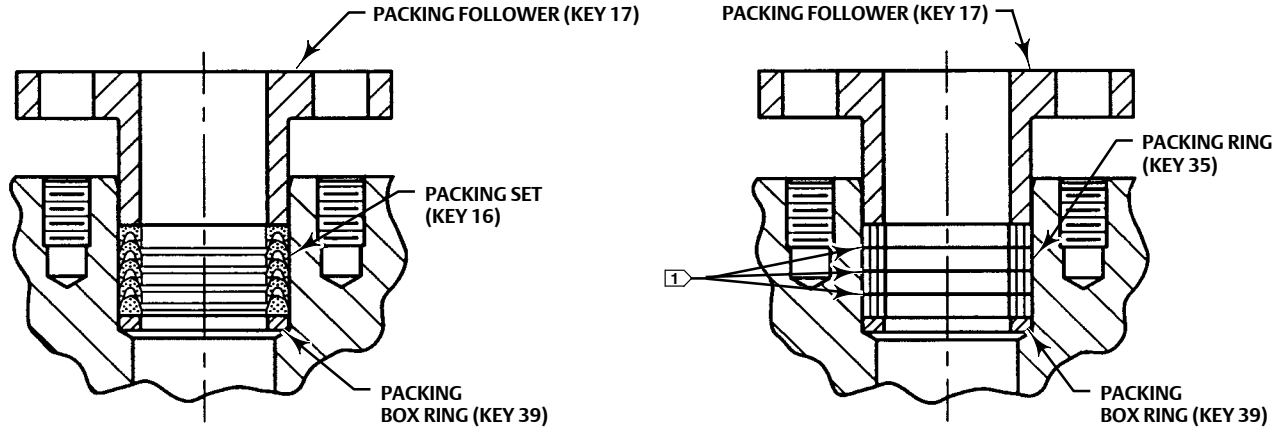

PTFE V-RING PACKING FOR V150E

GRAPHITE RIBBON PACKING FOR V150E

NOTE:
1 INCLUDES ZINC WASHERS (KEY 36) FOR GRAPHITE RIBBON PACKING ONLY.

28B5170

STANDARD PACKING

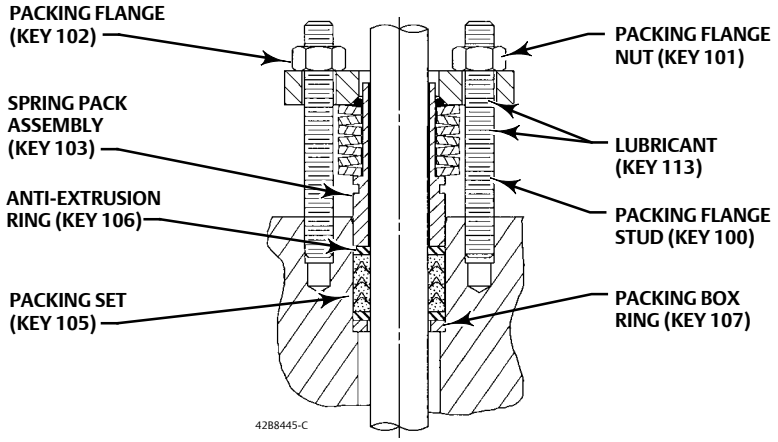

ENVIRO-SEAL PTFE PACKING SYSTEM

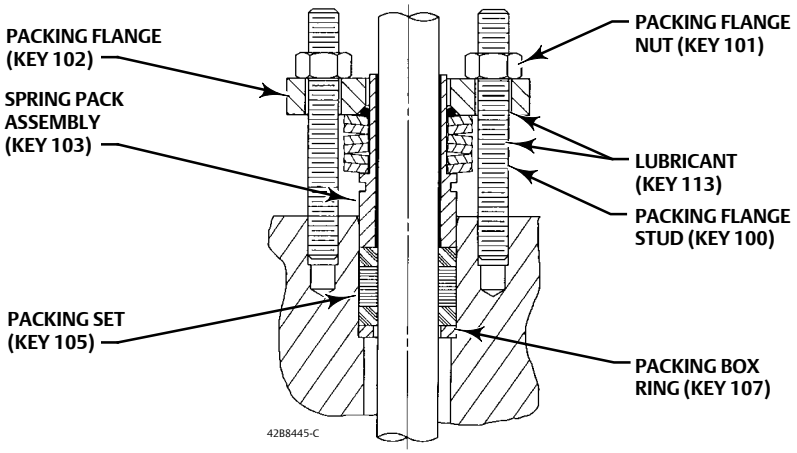

B2412-1

ENVIRO-SEAL GRAPHITE PACKING SYSTEM

Figure 4. Typical Fisher V150E Valve Showing Pry Bar

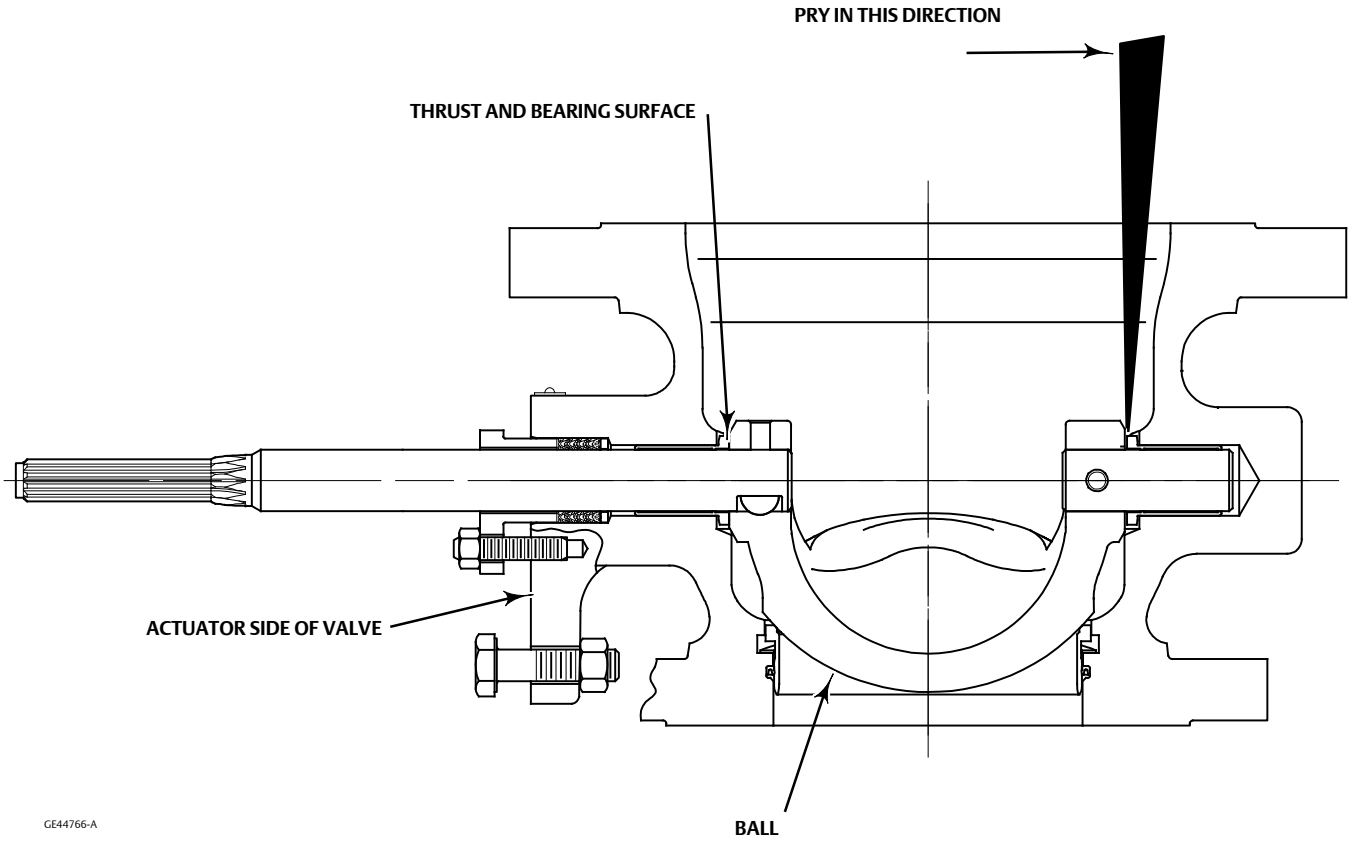

b. **For NPS 6x8 and larger valves,** the HD seal can be removed through the outlet end of the valve with the ball installed. Carefully rotate the ball past the 90 degree open position until it is no longer in contact with the HD seal.

CAUTION

Due to the ball shape, take care when you rotate either the front skirted edge or the circular back edge of the ball out of the HD seal, as the seal could be damaged.

2. With the inlet side of the valve facing up, push the HD metal seal (key 11) into the valve body (key 1).

CAUTION

Exercise care to avoid damaging components in the following procedure.

- It might be necessary to remove the HD metal seal by carefully tapping it with a soft punch and hammer. Take care not to damage the valve body.

- If the seal is difficult to push out, it is recommended that a seal removal plate be used to press the HD metal seal out of the valve body. Refer to figure 6 for dimensions of the seal removal plate.

Figure 5. Ball Seal Assembly

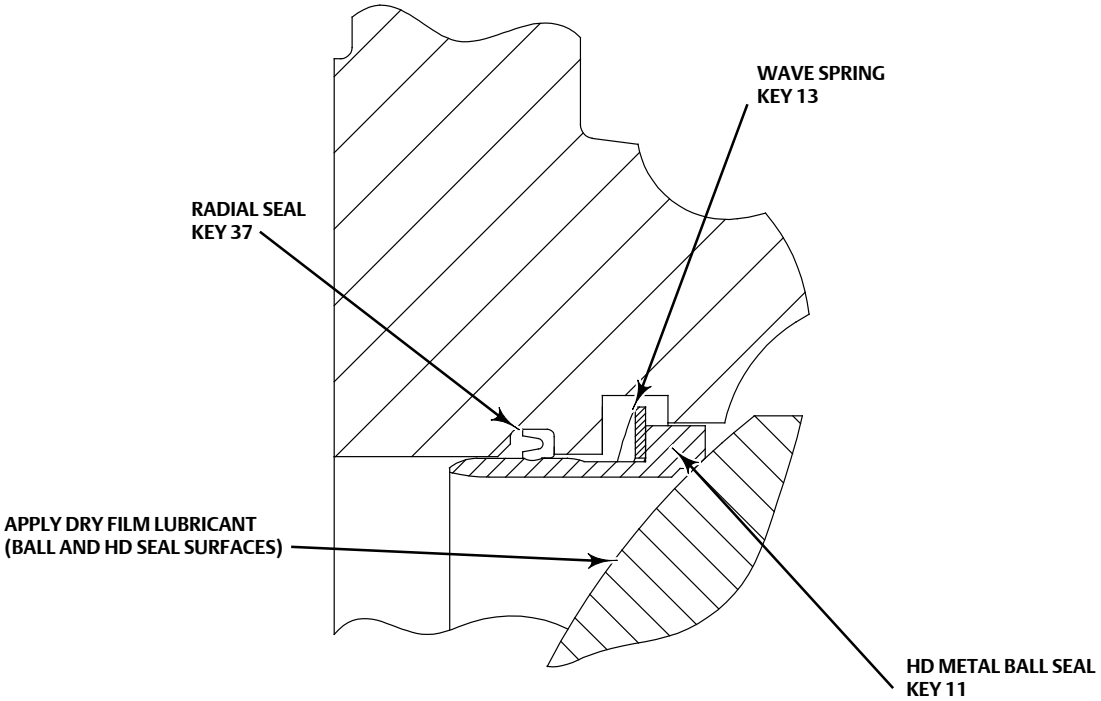

3. The seal can be removed through the outlet end of the valve. In NPS 6x8 and larger valves there is room to manipulate the seal around the ball and remove it from the outlet end. Remove the wave spring (key 13), and the radial seal (key 37).
4. If replacement of the ball, shafts (keys 6 or 9), or bearings (key 10) is needed, proceed to the Bearing and Ball Maintenance procedure. If only the seal is to be replaced, proceed to the Installing HD Metal Seals section.

⚠ WARNING

The Vee-Ball closes with a shearing, cutting motion, which could result in personal injury. To avoid injury or property damage, keep hands, tools, and other objects away from the Vee-Ball while stroking the valve.

Figure 6. HD Seal Removal Plate Dimensions

VALVE SIZE, NPS	DIMENSION A	
	Minimum-Maximum, mm	Minimum-Maximum, Inches
3x4	75.9-76.2	2.990-3.000
4x6	95.0-95.3	3.740-3.750
6x8	126.7-127.0	4.990-5.000
8x10	158.5-158.8	6.240-6.250
10x12	212.5-212.7	8.365-8.375

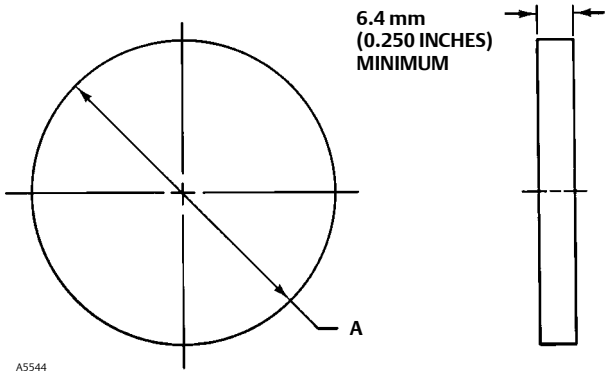

Installing HD metal seals

Refer to figures 6, and 13 for key number locations during seal installation.

Thoroughly clean all parts that are to be reused and obtain replacement parts. Be sure that all sealing surfaces are in good condition without scratches or wear. Place the valve body on a flat surface with the inlet side of the valve facing up.

1. Lubricate the radial seal (key 37) and install into the appropriate groove in the valve body, making sure the open side of the radial seal faces away from the ball.
2. Install the wave spring (key 13) into the appropriate groove in the valve body.
3. **HD Metal Seal Lubrication** will assist with break-in of the HD metal seals and with assembly. It is **required** that both the **ball** surface and **seal** be lubricated with dry film lubricant or equivalent moly disulfide.
4. Position the valve body on a flat surface with the outlet side of the valve facing up.

   a. On all sizes without the ball installed, the HD seal can be installed by pushing the HD seal past the wave spring and radial seal, making sure the HD metal seal remains level. Following this, install the remaining trim components as explained under the Bearing and Ball Maintenance section and specifically the Assembly heading on page 13.

   b. On NPS 6x8 and larger valves, if the ball is still installed, rotate the ball past the 90 degree open position and hold it there while you install the HD metal seal (key 11) into the valve body. Push the HD seal past the wave spring and radial seal, making sure the HD metal seal remains level.

5. Use the pry to move the ball tightly against the bearing on the actuator side of the valve to help ensure correct side-to-side centering of the ball (key 2) on the seal (key 11). See figure 4.
6. Be sure that the HD seal is fully installed in the valve. Carefully rotate the ball to engage the HD seal while applying force across the middle of the seal to compress the wave spring until the ball is fully engaged. Be cautious during this process, knowing that excessive force may damage the ball. Keep the ball in the engaged position going forward.
7. Continue to check the ball's position and re-center if necessary during actuator mounting and packing adjustments.

Bearing and Ball Maintenance

⚠ WARNING

Before performing the steps in this section, observe the WARNING at the beginning of the Maintenance section on page 5.

Procedures for disassembly and assembly of the bearings and ball cannot be accomplished until the shaft and valve packing are removed from the valve. Refer to the Replacing Packing procedures to remove the actuator, and to remove the packing flange and packing follower from the valve. When the packing disassembly steps are complete, return to this section.

Disassembly

⚠ WARNING

When the actuator is removed from the valve, the ball/shaft assembly may suddenly rotate, with a shearing, cutting motion, which could result in personal injury. To avoid injury, carefully rotate the ball to a stable position at the bottom of the valve body cavity. Make sure the ball will not rotate.

Key numbers in this procedure are shown in figures 5 and 10, unless otherwise indicated.

1. A taper key (key 4) is used to connect the ball and drive shaft.
2. Carefully rotate the ball to the open position after the actuator is disconnected. Make sure the ball will not rotate (see warning above). Provide support for the ball during the following disassembly.
3. Working from the small end of the groove pin (key 7), use a pin punch to drive the groove pin out of the ball ear and follower shaft.

For tack welded taper keys, driving the taper key out of the ball ear will shear the tack welding.

4. Locate the small end of the taper key (key 4). Using a pin punch on the smaller end of the taper key, drive it out of the ball (key 2) and drive shaft (key 6). Note: driving the taper key in the wrong direction will tighten it.
5. Pull the drive shaft (key 6) out of the actuator side of the valve body.

CAUTION

Exercise care to avoid damaging components in the following procedure.

6. The ball will be free to move when both shafts are removed. Make sure the sealing surface of the ball is not damaged while removing the follower shaft.
7. Use a piece of continuous threaded rod as a removal rod when moving the follower shaft (key 9) into the center of the ball. Refer to table 3 for a description of the size threaded rod needed. The length of the rod should allow easy working room from the valve body.

Table 3. Continuous Threaded Rod

Valve Size, NPS	Threaded Rod Thread Size	Thread Depth in Follower Shaft, Inches
3x4	1/4-20	0.5
4x6	1/4-20	0.5
6x8	1/4-20	0.5
8x10	5/16-18	0.62
10x12	5/16-18	0.62

8. Carefully remove the follower shaft and ball (key 2) from the outlet end of the valve body.
9. The bearings are not pressed in, so they can be removed with minimal force. Be careful not to damage the machined surfaces of the bearing bore if prying is required.
10. For HD seal removal, follow the steps outlined under Removing HD Seal on page 7.

Assembly

1. Inspect all sealing surfaces to ensure they are in good condition and without scratches or wear.
2. Install the HD ball seal. See Installing the HD Seal on page 12, and follow steps 1 – 4. Then return to this procedure and continue with the next steps.
3. Install the replacement bearings (key 10) by hand. The bearing flanged end should touch the valve body.
4. Installing the Vee-Ball:

Lubrication will assist with break-in of the HD metal seals and with assembly. It is required that both the ball surface and seal be lubricated with dry film lubricant or equivalent moly disulfide.

⚠ WARNING

The ball might be damaged if it is allowed to fall into the valve body. To avoid personal injury or damage to the sealing surfaces, support the ball to prevent it from falling into or out of the valve body cavity.

Place the valve body on a table or bench with the inlet side down and carefully install the ball into the valve body cavity from the outlet end.

When installing the ball (key 2) into the valve body assembly, firmly support the ball while installing the shafts in the following steps.

5. Installing the follower shaft (key 9):

- For NPS 3x4 valves: The follower shaft (key 9) should already have been inserted into the ball ear before the ball was put into the valve body. With the ball rotated open and not in contact with the HD seal, insert the follower shaft (key 9) into the valve body bearing (key 10).
- For NPS 4x6 and larger valves: With the ball rotated open and not in contact with the HD seal, insert the follower shaft (key 9) through the ball, and into the valve body bearing (key 10).

6. Align the hole in the follower shaft with the holes in the ball. Insert the small end of the groove pin (key 7) into the hole in the ball and into the follower shaft. The pin will hold the parts in place while the drive shaft (key 6) is being installed.
7. Installing the Drive Shaft:

CAUTION

The drive shaft must be used with the correct Vee-Ball. Refer to the tag (see figure 7) attached to the Vee-Ball and to the drive shaft.

Failure to use the correct Vee-Ball/ shaft combination may result in the ball not being in the position indicated by the slash mark on the end of the shaft. If the ball is not properly aligned with the slash mark, the valve will not function correctly and seal damage may result.

Figure 7. Informational Tag

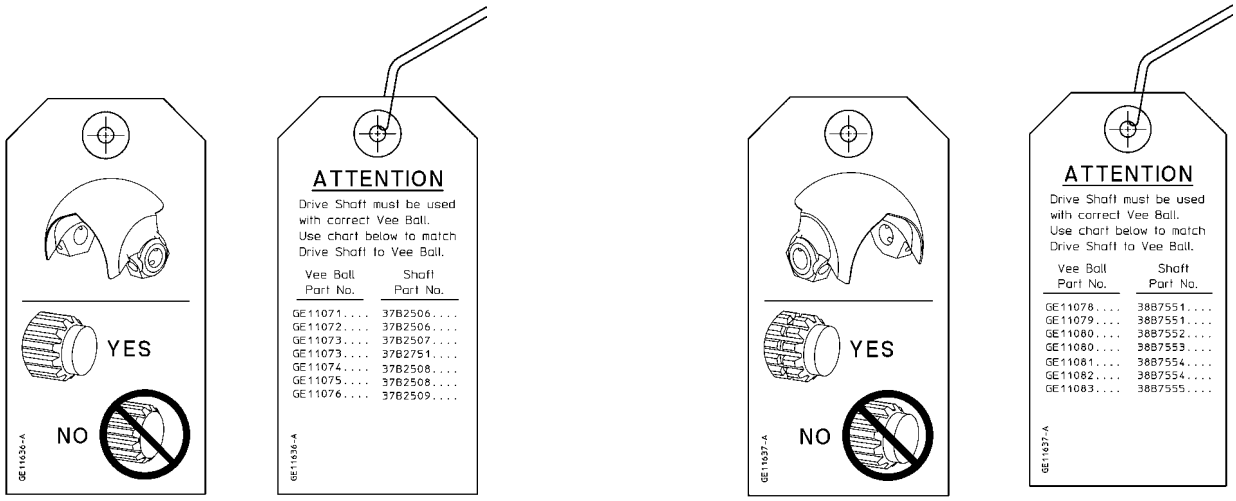

GE11636-A **FOR STANDARD RIGHT/LEFT HAND BALL**

GE11637-A **FOR OPTIONAL LEFT HAND BALL**

Installing the Taper Key

Current standard construction materials for all valves require the taper key (key 4, figure 9) to be tack welded in place **after properly seating**, using the following procedure. Use standard welding preparations when preparing parts for reassembly.

CAUTION

Make sure the drive shaft is free of oil or grease, otherwise the taper pin or taper key will not seat properly. Failure to properly set the taper pin or taper key could result in it coming loose while in service. Loosening of the taper key in service could result in improper valve function and equipment damage.

8. Install the drive shaft (key 6) into the valve body through the ball and into the ball.
9. Insert the taper key (key 4) into ball and drive shaft (keys 2 and 6) as shown in figure 8. The taper key inserts with the flat side of the key facing the drive shaft (key 6).
10. Using a flat end punch, drive the groove pin (key 7) into the ball ear and follower shaft until it is flat with the ball ear surface. Stake both ends of the pin hole with a center punch to ensure the groove pin does not come out.
11. Using a flat end punch, drive the taper key (key 4) into the ball ear and drive shaft (key 6) until solid, heavy contact is obtained between the key and shaft.
12. Measure the position of the taper key head.
13. Drive the taper key in further using the minimum distance shown in table 4.
14. Inspect the ball/shaft taper key connection to verify that the taper key spans the entire shaft flat width. If not, the taper key must be driven in further until this condition is satisfied. However, do not exceed the maximum depths shown in table 5.

Note
All valve taper keys are tack welded, except titanium.

15. When the above conditions are met, tack weld the taper key (key 4) to the ball ear on the head end of the key (see figures 8 and 10). Use a:

- 1/8 inch diameter weld on NPS 3x4, 4x6, 6x8 valves,
- 3/16 inch diameter weld on NPS 8x10 and 10x12 valves

16. Use the pry to move the ball tightly against the bearing on the actuator side of the valve to help ensure correct side-to-side centering of the ball (key 2) on the seal (key 11). See figure 4.
17. Be sure that the HD seal is fully installed in the valve. Carefully rotate the ball to engage the HD seal while applying force across the middle of the seal to compress the wave spring until the ball is fully engaged. Be cautious during this process, knowing that excessive force may damage the ball. Keep the ball in the engaged position going forward.
18. Continue to check the ball's position and re-center if necessary during actuator mounting and packing adjustments.

For all constructions: Refer to Packing Maintenance, and other procedures as necessary to complete the assembly of the valve.

Actuator Mounting

Use the appropriate actuator instruction manual, this section of this manual, and figure 9 of this manual when mounting the actuator or changing actuator styles and positions.

1. To help ensure correct centering of the Vee-Ball (key 2) on the seal (key 11), be sure the ball is closed when mounting the actuator (for applications other than Spring Return Fail-Open).
2. Clean the valve shaft and actuator lever splines to be sure the actuator lever will slide on easily. Only drive the lever in if absolutely necessary.
3. Carefully wedge the ball solidly against the actuator-side bearing, using a screwdriver or similar tool inserted between the lower ear of the ball and the valve body. This will center the ball. See figure 4.

Figure 8. Taper Key Installation

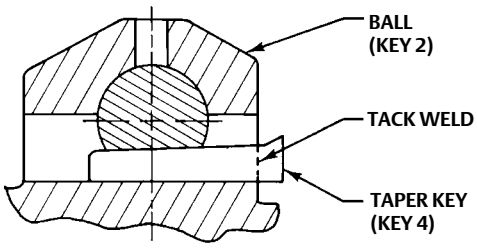

MINIMUM ENGAGEMENT OF TAPER KEY

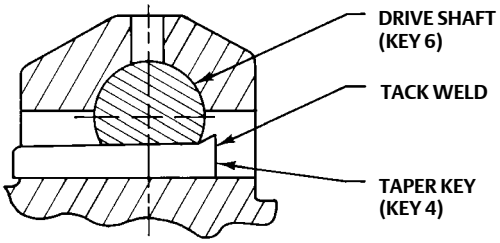

MAXIMUM ENGAGEMENT OF TAPER KEY

31B0727-E
A6035-1

Table 4. Taper Key Minimum Depth

Valve Size, NPS	Minimum Depth To Drive Taper Key After Initial Solid Contact, mm (Inches)
3x4, 4x6, 6x8	4.8 (0.188)
8x10, 10x12	5.6 (0.219)

Table 5. Taper Key Maximum Depth

Valve Size, NPS	Maximum Depth To Drive Taper Key After Initial Solid Contact, mm (Inches)
3x4, 4x6	7.1 (0.281)
6x8	7.9 (0.312)
8x10, 10x12	9.5 (0.375)

4. Keep the wedge in place while installing the lever, if necessary. Remove the wedge after you have clamped the actuator lever on the valve shaft and have connected the lever to the actuator piston rod or diaphragm rod.

Determining Mounting Position

The actuator can be either right or left-hand mounted, with the actuator on the right or left side when viewed from upstream (see figure 9).

The Series B Vee-Ball has one V-notch. For **right-hand mounting (standard)**, the ball will be in the top of the valve body when the valve is open and the shaft is horizontal. In this position the ball rotates CCW to Close. For **left-hand mounting (standard)**, the ball will be in the bottom of the valve body when the valve is open and the shaft is horizontal. In this position the ball rotates CCW to Close. An optional ball for **left-hand mounting,** which rotates into the top of the valve body when the shaft is horizontal, is also available. In this position the ball rotates CW to Close.

Determining Closed Position

1. The valve must be removed from the line to check the position of the ball.

⚠ WARNING

The Vee-Ball closes with a shearing, cutting motion. To avoid personal injury, keep hands, tools, and other objects away from the ball while stroking the valve.

2. Rotate the ball to the closed position.
3. Position the ball in the proper location

- When viewed from the valve body inlet, the ball is in the proper position when the flat spot on the top of the ball is exactly in the center of the seal package.

Make a copy of the centering template in figure 13 out of a suitable stiff material. Place the centering template in the opening at the seal (See figure 12). Find the center of the template and make sure the spot on the ball is centered directly below it.

4. Adjust the actuator as described in the appropriate actuator instruction manual until the ball is centered in the closed position. A line is stamped on the actuator end of the drive shaft (see figure 9) to indicate the ball position.

Use the appropriate actuator instruction manual and figure 9 of this manual when mounting the actuator or changing actuator styles and positions.

Parts Ordering

A serial number is assigned to each valve and stamped on the nameplate. Always refer to the valve serial number when corresponding with your Emerson Process Management sales office regarding spare parts or technical information. When ordering replacement parts, also specify the complete 11-character part number from the parts kits or parts list information.

⚠ WARNING

Use only genuine Fisher replacement parts. Components that are not supplied by Emerson Process Management should not, under any circumstances, be used in any Fisher valve, because they may void your warranty, might adversely affect the performance of the valve, and could cause personal injury and property damage.

Figure 9. Index Marks for Actuator Lever Orientation

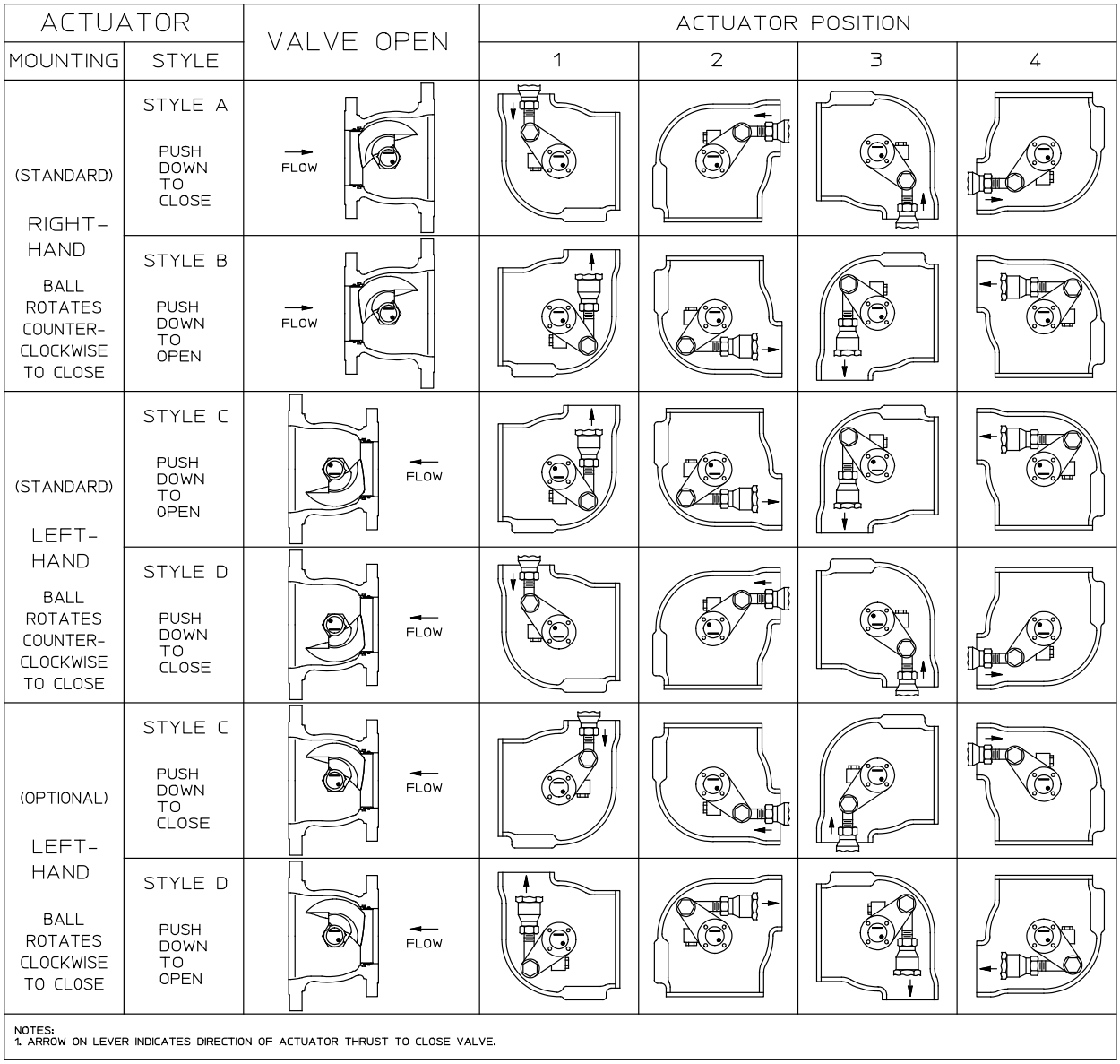

GG08274-A

Figure 10. Exploded View, Fisher V150E

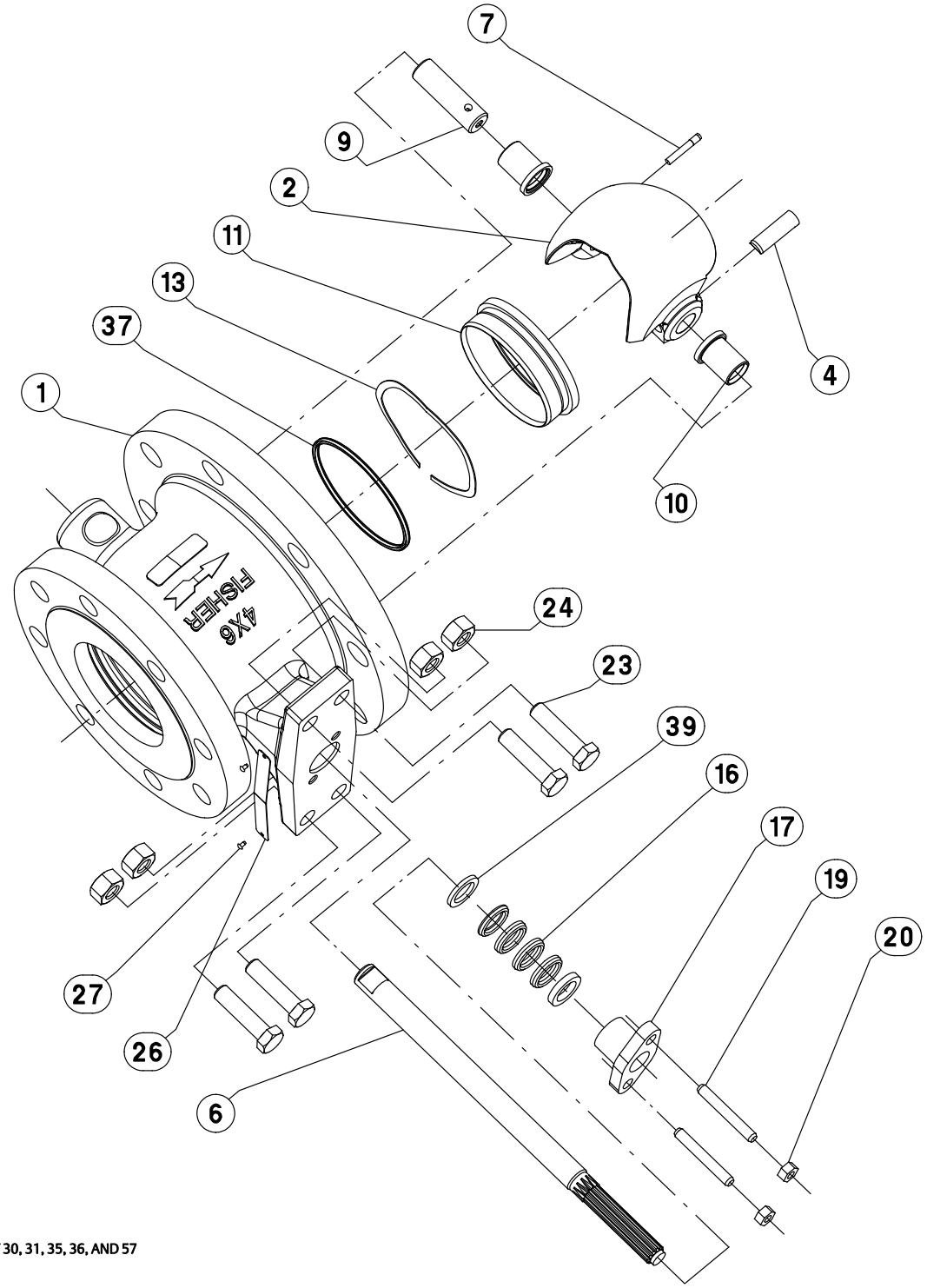

PARTS NOT SHOWN: KEY 30, 31, 35, 36, AND 57

Figure 11. Fisher V150E Dimensions

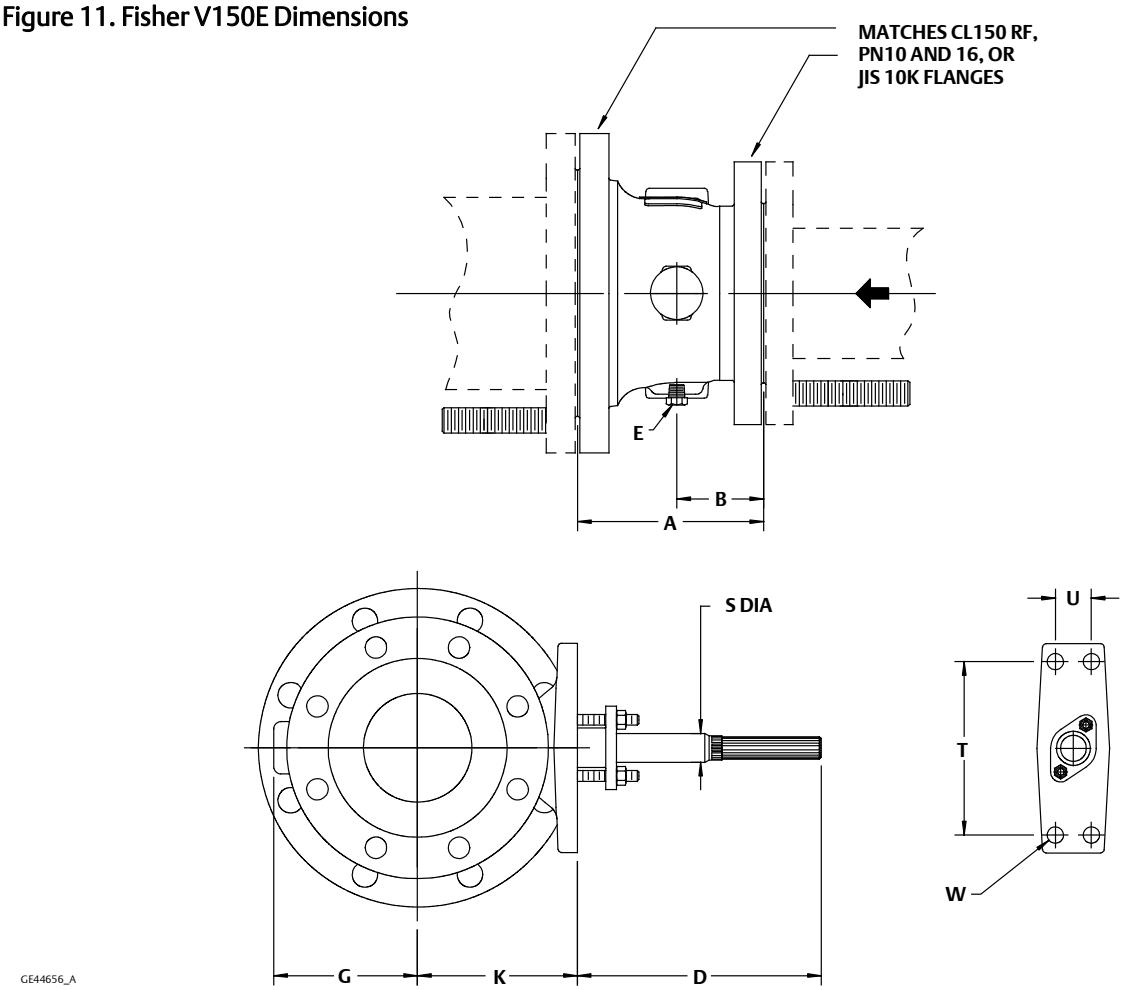

Table 6. Fisher V150E Dimensions (see figure 11)

DN(1)	mm										APPROXIMATE WEIGHT
	A	B	D	G	K	SØ	T	U	W	E (optional)	kg
80x100	165	82	214	111	130	19.1	152	31.8	14.2	1/2 NPT	26
100x150	163	76	214	127	141	19.1	152	31.8	14.2	1/2 NPT	28
150x200	207	101	214	154	164	25.4	152	31.8	17.5	1/2 NPT	46
200x250	248	123.5	208	189	232	31.8	235	46	17.5	3/4 NPT	87
250x300	297	147	208	216	260	31.8	235	46	17.5	3/4 NPT	123
NPS(1)	Inch										APPROXIMATE WEIGHT
	A	B	D	G	K	SØ	T	U	W	E (optional)	lbs
3x4	6.50	3.23	8.43	4.37	5.12	0.75	5.98	1.25	0.56	1/2 NPT	58
4x6	6.42	2.99	8.43	5.00	5.55	0.75	5.98	1.25	0.56	1/2 NPT	61
6x8	8.15	3.98	8.43	6.06	6.46	1.00	5.98	1.25	0.69	1/2 NPT	100
8x10	9.76	4.86	8.19	7.44	9.13	1.25	9.25	1.81	0.69	3/4 NPT	192
10x12	11.69	5.79	8.19	8.50	10.24	1.25	9.25	1.81	0.69	3/4 NPT	271

1. Valve Inlet size x Outlet size

Figure 12. Centering Template in Use

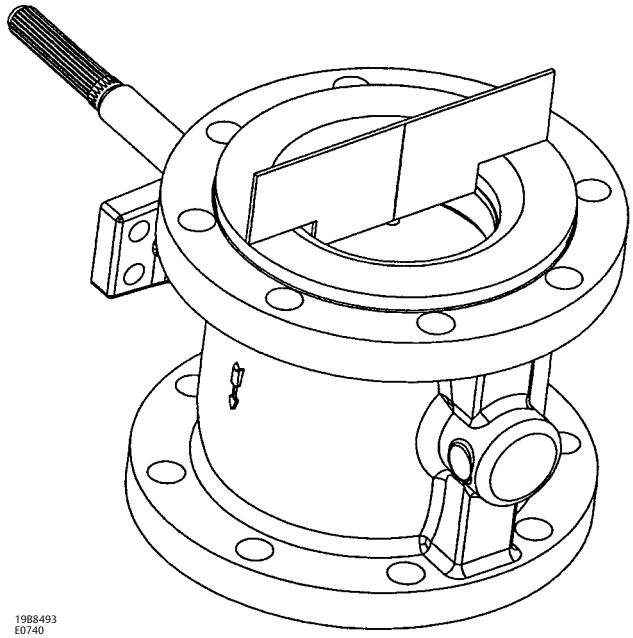

Figure 13. Centering Template Dimensions

VALVE SIZE	A	B	C	D
DN	mm			
80x100	127	63	24	38
100x150	157	82	36	44
150x200	216	117	21	51
200x250	270	139	12	57
250x300	324	203	2	60
NPS	Inches			
3x4	5.00	2.50	0.94	1.50
4x6	6.19	3.25	1.42	1.75
6x8	8.50	4.62	0.82	2.00
8x10	10.62	5.50	0.48	2.25
10x12	12.75	8.00	0.09	2.38

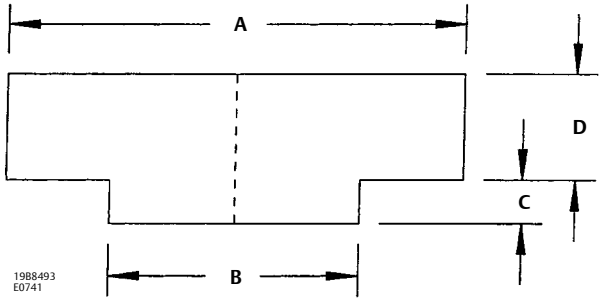

Retrofit Kits for ENVIRO-SEAL Packing

Retrofit kits include parts to convert existing V150E valves with shallow (single packing depth) packing box to the ENVIRO-SEAL packing box construction. Retrofit kits include single PTFE packing. See following table.

ENVIRO-SEAL Packing Retrofit Kits

SHAFT DIAMETER(1)		PART NUMBER	
mm	**Inches**	**Single PTFE**	**Graphite**
19.1	3/4	RRTYXRT0032	RRTYXRT0332
25.4	1	RRTYXRT0052	RRTYXRT0352
31.8	1-1/4	RRTYXRT0062	RRTYXRT0362
Parts Included in Kit			
Key	**Description**	**Quantity**	
100	Packing stud	2	2
101	Packing nut	2	2
102	Packing flange	1	1
103	Spring pack assembly	1	1
105	Packing set	1	1
106	Anti-extrusion washer	2	- - -
107	Packing box ring(2)	1	1
- - -	Tag	1	1
- - -	Tie Cable	1	1

1. Diameter through the packing box.
2. Not required for all sizes of V150E with 1-1/4 inch diameter shafts.

Repair Kits for ENVIRO-SEAL Packing

Repair kits include valves parts for shallow (single packing depth) for ENVIRO-SEAL packing box construction. Repair kits include single PTFE or graphite packing. See following table.

ENVIRO-SEAL Packing Repair Kits

SHAFT DIAMETER(1)		PART NUMBER	
mm	**Inches**	**PTFE**	**Graphite**
19.1	3/4	RRTYX000032	13B8816X052
25.4	1	RRTYX000052	13B8816X092
31.8	1-1/4	RRTYX000062	13B8816X112
Parts Included in Kit			
Key	**Description**	**Quantity**	
105	Packing set	1	1
106	Anti-extrusion washer	2	- - -(2)

1. Diameter through the packing box.
2. Included in key 105.

Parts List

Note
Part numbers are shown for recommended spares only. For other part numbers, contact your Emerson Process Management sales office.

Common Parts (figure 10)

Key	Description	Part Number
1	If you need a valve body as a replacement part, order by valve size, serial number, and desired valve body material. Contact your Emerson Process Management sales office for assistance.	
2	Ball	
4*	Taper Key	
	R30006 (cobalt alloy 6 casting)	
	NPS 3x4 and 4x6	12B9530X012
	NPS 6x8	12B9531X012
	NPS 8x10 and 10x12	12B9532X012
6	Drive Shaft	
7*	Groove Pin	
	S31600 (316 Stainless Steel)	
	NPS 3x4 and 4x6	18A6135X012
	NPS 6x8	18A6138X012
	NPS 8x10	11B0738X012
	NPS 10x12	11B8596X012
9	Follower Shaft	
10*	Bearing (2 req'd)	
	PEEK/PTFE	
	NPS 3x4 and 4x6	17B7142X012
	NPS 6x8	27B7136X012
	NPS 8x10 and 10x12	27B7775X012
11*	Ball Seal	
	HD (Heavy-Duty) Metal	
	R30006 (cobalt alloy 6 casting)	
	NPS 3x4	34B4766X032
	NPS 4x6	34B4767X032
	NPS 6x8	34B4768X032
	NPS 8x10	34B4769X032
	NPS 10x12	34B3365X032
13*	Wave Spring, N07750	
	NPS 3x4	24B4760X012
	NPS 4x6	24B4761X012
	NPS 6x8	24B4762X012
	NPS 8x10	24B4763X012
	NPS 10x12	22B4509X012
16*	Packing Set, PTFE and carbon-filled PTFE V-ring	
	NPS 3x4 and 4x6	12A8995X022
	NPS 6x8	12A8832X022
	NPS 8x10 and 10x12	12A8951X022
17	Packing Follower	
19	Packing Follower Stud	
20	Packing Follower Nut	
23	Actuator Mounting Screw	
24	Actuator Mounting Nut	
25	Pipe Plug (optional)	
	S31600	
	NPS 3x4, 4x6, and 6x8	1A369235072
	NPS 8x10 and 10x12	1A771535072
26	Identification Nameplate	18B2294X012
27	Drive Screw	
28	Flow Arrow	
30	Nameplate	
31	Nameplate Wire	
37*	Radial Seal, PTFE/CG	
	NPS 3x4	18B0264X012
	NPS 4x6	28B0265X012
	NPS 6x8	28B0266X012
	NPS 8x10	28B0267X012
	NPS 10x12	28B0268X012
39*	Packing Box Ring	
	S31600	
	NPS 3x4 and 4x6	16A6084X012
	NPS 6x8	16A6085X012
	NPS 8x10 and 10x12	16A6086X012
130	Clamp	
131	Bonding Strap Assembly	

*Recommended spare parts

ENVIRO-SEAL Packing System (Parts in all Vee-Ball Valves) (figure 3)

Key	Description	Part Number
100	Packing Flange Stud	
101	Packing Flange Nut	
102	Packing Flange	
103	Spring Pack Assembly	
105*	Packing Set	
	W/single PTFE packing	
	NPS 3x4	12B7414X012
	NPS 4x6	12B7414X012
	NPS 6x8	12B7438X012
	NPS 8x10 and 10x12	12B7450X012
106*	Anti-Extrusion Ring (2 req'd)	
	W/single and double PTFE packing	
	NPS 3x4 and 4x6	12B7418X012
	NPS 6x8	12B7442X012
	NPS 8x10 and 10x12	12B7454X012
107*	Packing Box Ring	
	W/single and double PTFE packing	
	NPS 3x4 and 4x6	16A6084X012
	NPS 6x8	16A6085X012
108*	Packing Ring (2 req'd)	
	W/double PTFE packing	
	NPS 3x4 and 4x6	12A8992X022
	NPS 6x8	12A8831X022
	NPS 8x10 and 10x12	12A8953X022
109*	Anti-Extrusion Ring (2 req'd)	
	NPS 3x4 and 4x6 PTFE packing	12B7422X012
	NPS 6x8 PTFE packing	12B7446X012
	NPS 8x10 and 10x12 PTFE packing	12B7458X012
110	Lantern Ring	
111	Tag	
112	Tie Cable	
113	Lubricant, anti-seize (not furnished with packing system)	

*Recommended spare parts

Neither Emerson, Emerson Process Management, nor any of their affiliated entities assumes responsibility for the selection, use or maintenance of any product. Responsibility for proper selection, use, and maintenance of any product remains solely with the purchaser and end user.

Fisher, Vee-Ball, ENVIRO-SEAL, and FIELDVUE are marks owned by one of the companies in the Emerson Process Management business unit of Emerson Electric Co. Emerson Process Management, Emerson, and the Emerson logo are trademarks and service marks of Emerson Electric Co. All other marks are the property of their respective owners.

The contents of this publication are presented for informational purposes only, and while every effort has been made to ensure their accuracy, they are not to be construed as warranties or guarantees, express or implied, regarding the products or services described herein or their use or applicability. All sales are governed by our terms and conditions, which are available upon request. We reserve the right to modify or improve the designs or specifications of such products at any time without notice.

Emerson Process Management
Marshalltown, Iowa 50158 USA
Sorocaba, 18087 Brazil
Chatham, Kent ME4 4QZ UK
Dubai, United Arab Emirates
Singapore 128461 Singapore

www.Fisher.com

© 2010, 2012 Fisher Controls International LLC. All rights reserved.