EN

SIMARINE®

SCQ25T Digital Shunt and Tank Module

USER MANUAL

V2.0

USER MANUAL

SCQ25T Digital Shunt and Tank Module

© 2022 SIMARINE

All rights reserved. No parts of this work may be reproduced in any form or by any means - graphic, electronic, or mechanical, including photocopying, recording, taping, or information storage and retrieval systems - without the written permission of the publisher.

Products that are referred to in this document may be either trademarks and/or registered trademarks of the respective owners. The publisher and the author make no claim to these trademarks.

While every precaution has been taken in the preparation of this document, the publisher and the author assume no responsibility for errors or omissions, or for damages resulting from the use of information contained in this document or from the use of programs and source code that may accompany it. In no event shall the publisher and the author be liable for any loss of profit or any other commercial damage caused or alleged to have been caused directly or indirectly by this document.

Table of Contents

1. Introduction 5

2. Safety 7

3. Overview 9

4. Installation 11

4.1 Mounting 12

4.2 Cables 12

4.3 Connecting 12

4.4 SCQ25T Connection 13

5. Technical specifications 15

6. Troubleshooting 17

6.1 Shunt Sensors not visible 18

6.2 Shunt/tank sensor is not visible on PICO 18

6.3 Tank sensor is showing an empty tank 18

1

Introduction

1. Introduction

The SCQ25T digital shunt module is Simarine's most versatile module. It can be used to measure voltages, currents, liquid levels and temperatures.

SCQ25T has 4x 25 A integrated shunts, capable of measuring voltage up to 35 V DC and continuous current up to 25 A on each shunt.

SCQ25T can measure temperature or liquid level such as water, fuel or any other liquid. It comes with 4 integrated resistance inputs operating from 0 ohm - 65 kohm and 3 integrated voltage inputs, operating from 0 V - 32 V.
You can connect any tank or temperature sensor operating in this range.

SCQ25T also features a configurable alarm contact, which fires on specific alarms. It can handle a maximum current 1A on maximum 30V DC. The alarm is configurable via PICO's device menu or PICO's mobile app menu.

2

Safety

2. Safety

DISCLAIMER: Installation of Simarine electronics should be made by electrical specialists with proper safety equipment. When working with batteries you should wear protective clothing and eye protection.

CAUTION: Batteries contain acid, a corrosive, colorless liquid that will burn your eyes, skin and clothing. Should the acid come in contact with eyes, skin or clothing, wash the area with fresh water for at least 15 minutes, and seek medical support immediately.

CAUTION: Do NOT connect anything to a damaged battery. It could heat up, catch fire or explode.

CAUTION: Lead-acid Batteries can generate explosive gases during operation. Never smoke, allow flames or sparks near the battery. Make sure to keep sufficient ventilation around the battery.

CAUTION: When working with a battery remove all personal metal items like watches, rings, necklaces and bracelets.
Metal items in contact with the battery terminals might cause a short circuit with a very high electric current, which may heat up and melt nearby objects and cause severe burns.

3

Overview

3. Overview

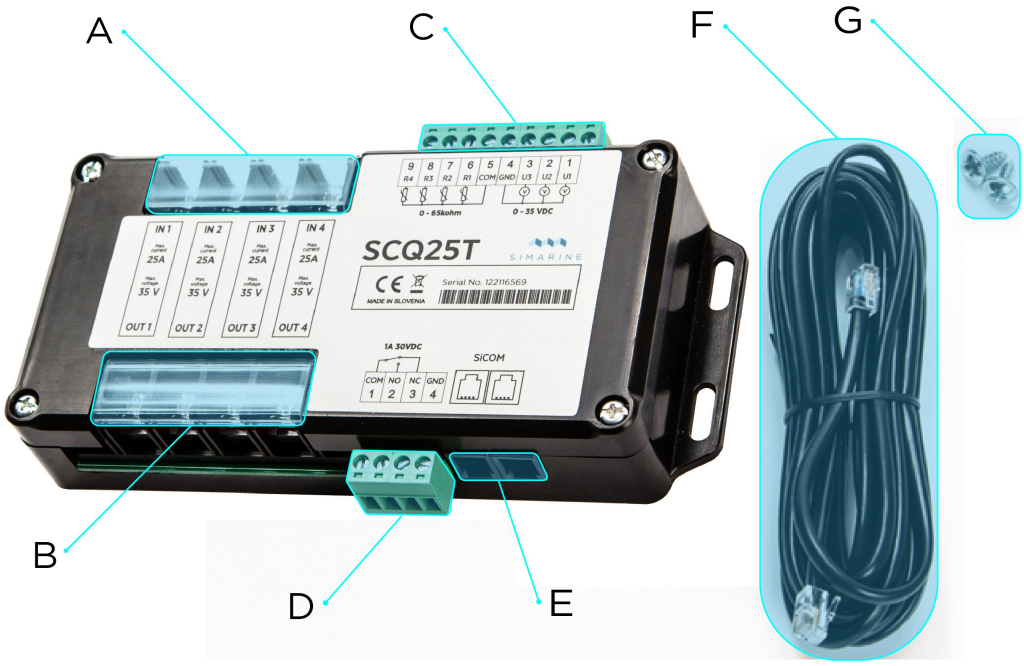

A - 4x shunt input
B - 4x shunt output
C - 1x Tank add-on: [4x resistance sensing input & 3x voltage sensing input]
D - 1x Alarm contact (optional and configurable via PICO menu or Simarine App)
E -

4

Installation

4. Installation

4.1 Mounting

CAUTION: Install the power unit in a clean and dry place protected from accidental spilling of liquids.

Remove the shunt cover by unscrewing four screws on top of the cover.

4.2 Cables

CAUTION: Failure to observe the required cable cross-sections can damage the shunt, wiring, or cause a fire.

SiCOM data cable:

- For the SiCOM connection use the supplied cable. If not possible, use the following table to determinate the right cable type.

Cable length	Cable type
< 5m	No limitations
>= 5m	2x2x0.25 mm2 twisted pair (recommended)

4.3 Connecting

For proper functionality of Simarine's SCQ25T digital shunt and tank module it is necessary to:

1. Connect SCQ25T to Simarine PICO via the SICOM port.
2. Connect consumers/generators minus or plus terminal through one SCQ25T shunt. *
3. Connect any compatible tank or temperature sensors to SCQ25T via the resistance or voltage input. **
4. Connect the alarm contact to execute specific operation on the alarm. ***

* Each correctly connected shunt needs to be configured. This is done via PICO in an easy way. The configuration process is described in PICO's manual.

** Each connected liquid or temperature sensor needs to be configured and calibrated. This is done via PICO in an easy way.
The configuration and calibration process is described in Pico's manual.

*** To activate the alarm contact it is necessary to configure it via PICO in an easy way. The configuration process is described in PICO's manual.

4.4 SCQ25T Connection

Example of a PICO-Splitter-SCQ25T connection with voltage level sensors/battery banks and resistance level sensors/temperature sensors.

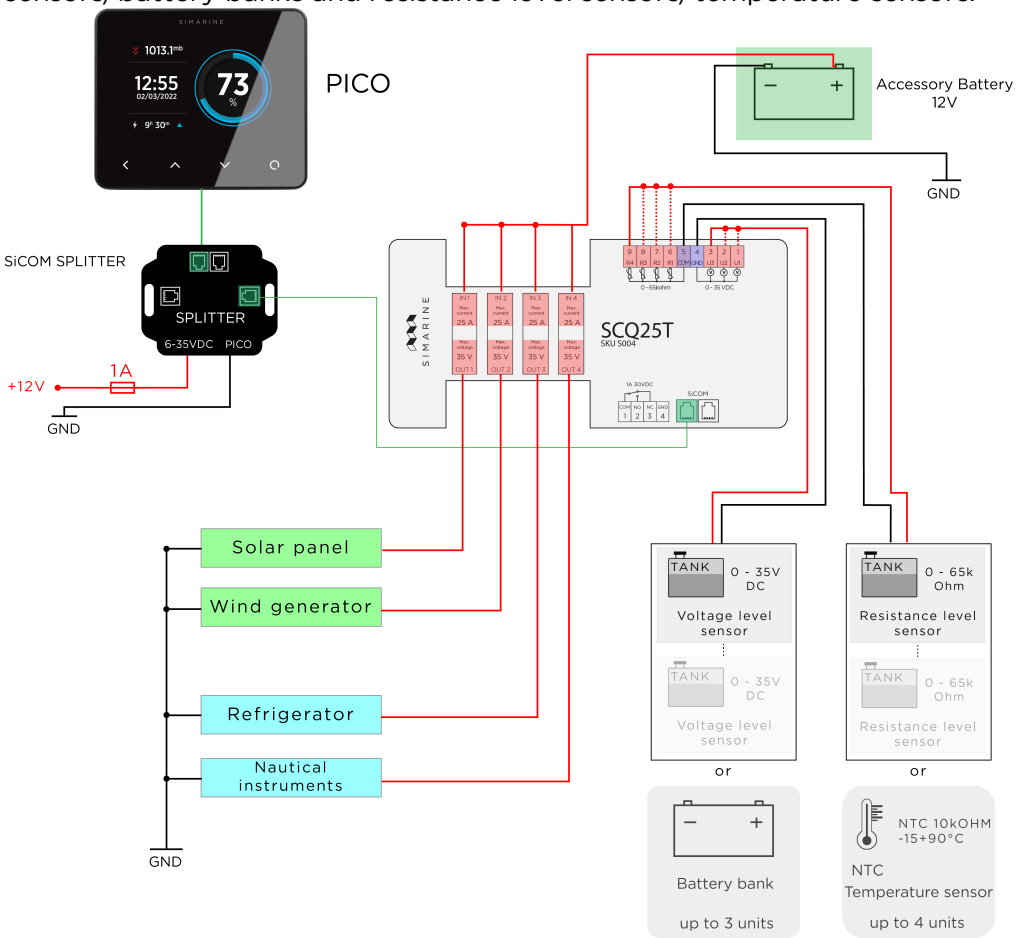

5

Technical specifications

5. Technical specifications

SCQ25T	
Operating	
Voltage range	6 - 35 V
Temperature range	-20 – 70 °C (-4 – 158 °F)
Power consumption at 12V	
Operating	2.5 mA
Current Measuring (per channel)	
Range	0.01 - 25 A
Accuracy	0.6 %
Resolution	0.01 A
Sampling rate	100 ms
Maximal current	
Continuous	25 A
Peak current (<1 min)	35 A
Voltage inputs	
SCQ25T	4
SCQ25T (Tank Module)	3
Voltage measuring on any channel	
Range	0 - 35 V
Resolution	1 mV
Accuracy	± 0.2 %
Sampling rate	10 ms
Resistance inputs	
SCQ25T	4
SCQ25T (Tank Module)	4
Resistance measuring on any channel	
Range	0 - 65 kOhm
Accuracy	± 0.1 %
Dimensions	
SCQ25T	183 x 91 x 34 mm 7.20 x 3.58 x 1.33 in
Connectivity	
Tank level sensors	up to 7
Temperature sensors	up to 4
SICOM port	2
Alarm contact	1

6

Troubleshooting

6. Troubleshooting

6.1 Shunt Sensors not visible

If PICO is showing a wrong sign for current value, then check if the shunt is correctly installed. This means that the consumers/generators minus (optionally plus) terminal is connected to the IN terminal on the shunt.

If this is not the case, try to reinstall the shunt or simply switch the IN and OUT terminal via the shunt configuration on PICO.

6.2 Shunt/tank sensor is not visible on PICO

If the shunt/tank sensor is not visible in PICO's menu, check the following:

- Is the SCQ25T properly connected via the SiCOM port to the PICO.
- If you are using your own SiCOM cable make sure it has the right square and is twisted.

6.3 Tank sensor is showing an empty tank

In case you installed the sensor for the first time, consider checking the following:

- Check if the tank sensor is covering the whole tank level.
- If you are using a floating sensor, which is too short, it can happen that the sensor is not detecting any liquid under a specific level.
- Consider recalibrating the tank sensor.

Safe Voyage.

SIMARINE

SIMARINE marine electronics

www.simarine.net

©2022 All rights reserved