MAYTONI
DECORATIVE LIGHTING

Instruction

MOD156PL-L52B4K

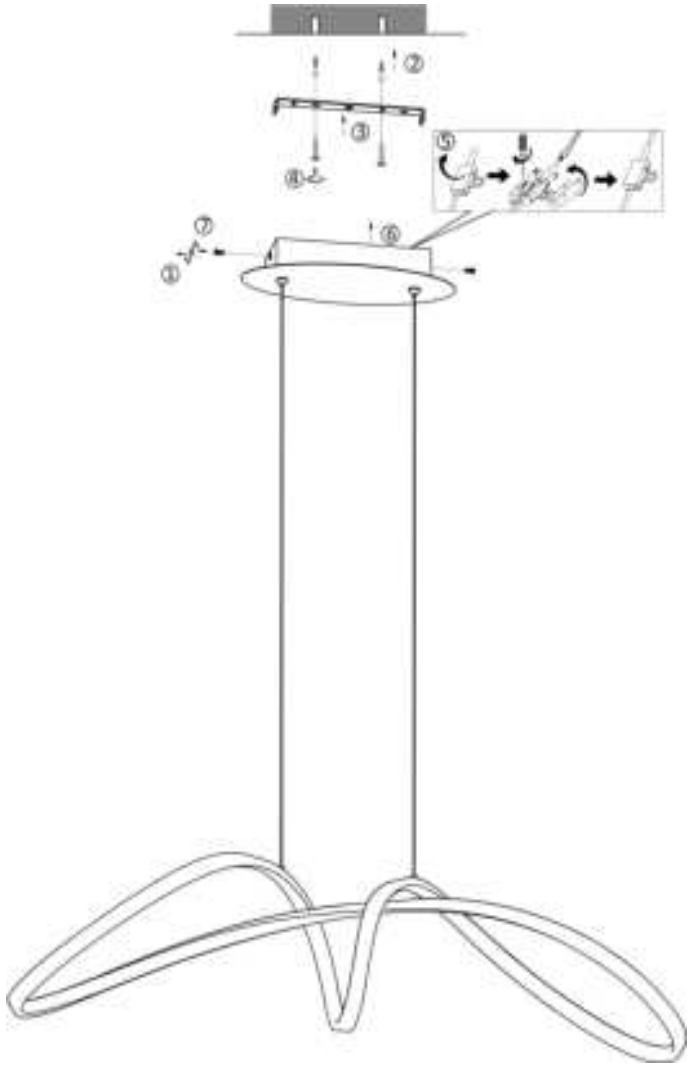

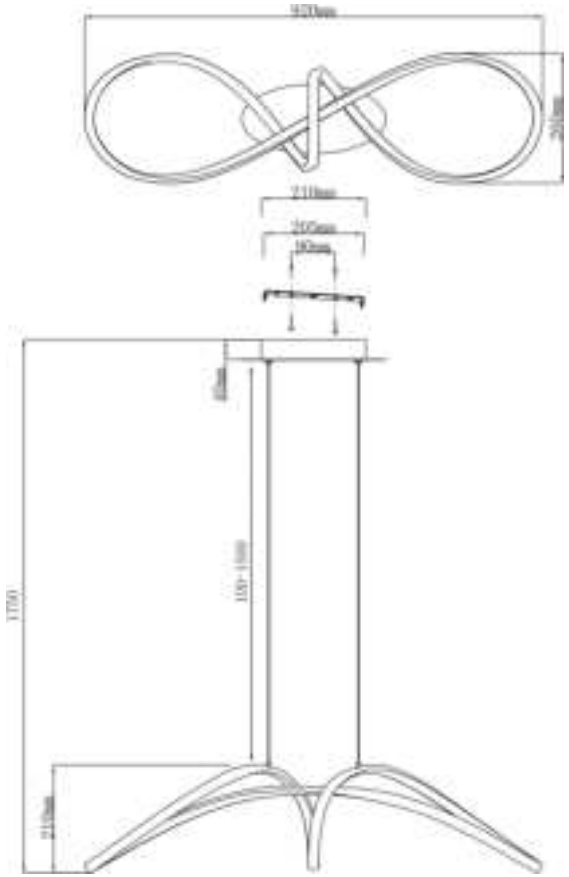

LED

MAX 42W

2 800 Lumen

Model: MOD156PL-L52B4K

Collection: Modern

Series: Curve

Pendant Lamps

This product contains a light source of the energy efficiency class G