INSTALLATION LED POWER SUPPLY - QTM-eLED+TW

Housing

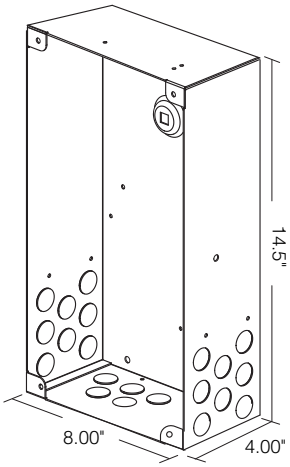

ISOMETRIC VIEW

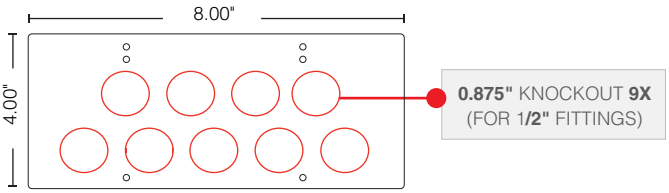

BOTTOM VIEW

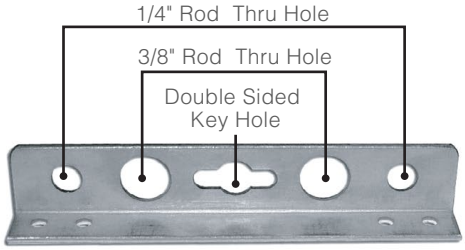

NOTE: Bracket can also be mounted (Top & Bottom) for Vertical Mounts.

Mounting Options

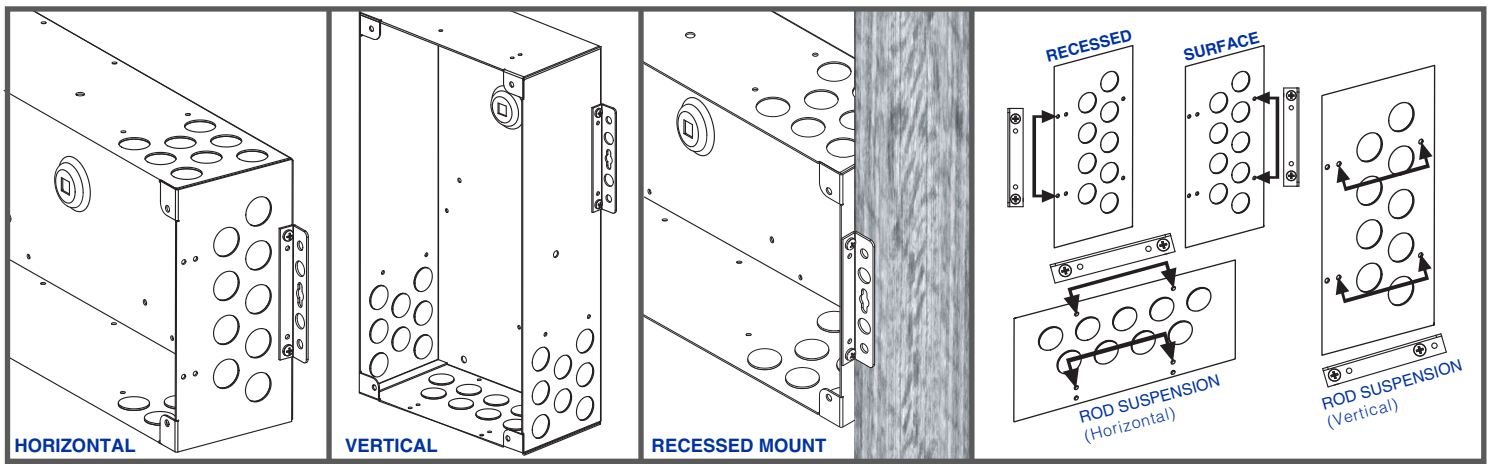

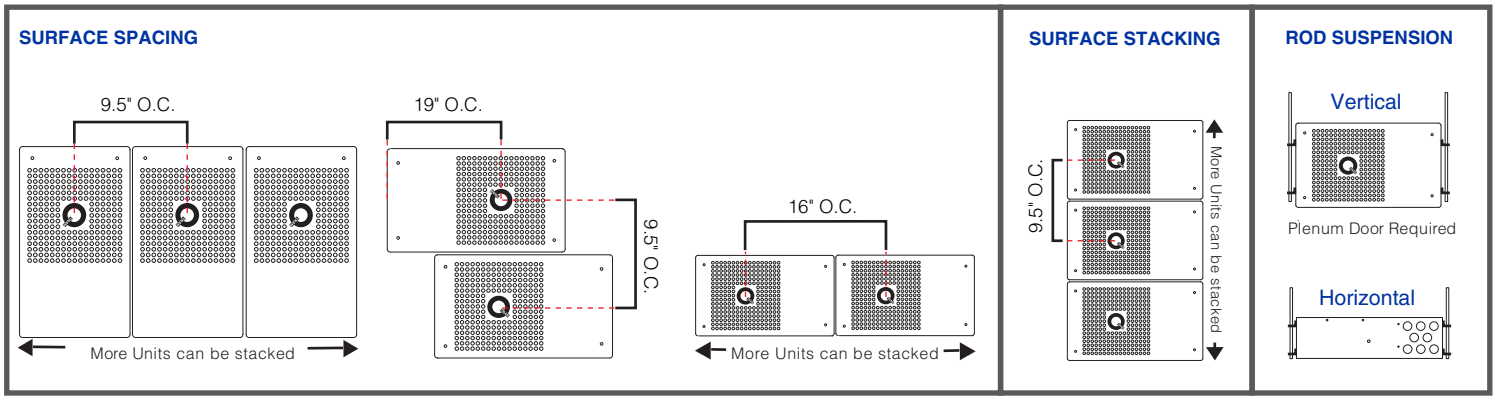

NOTE: Rods not included.

© 2023 Q-Tran Inc. All rights reserved

INSTALLATION LED POWER SUPPLY - QTM-eLED+TW

Driver with Dimming Module

QTM-eLED+TW

: for interior

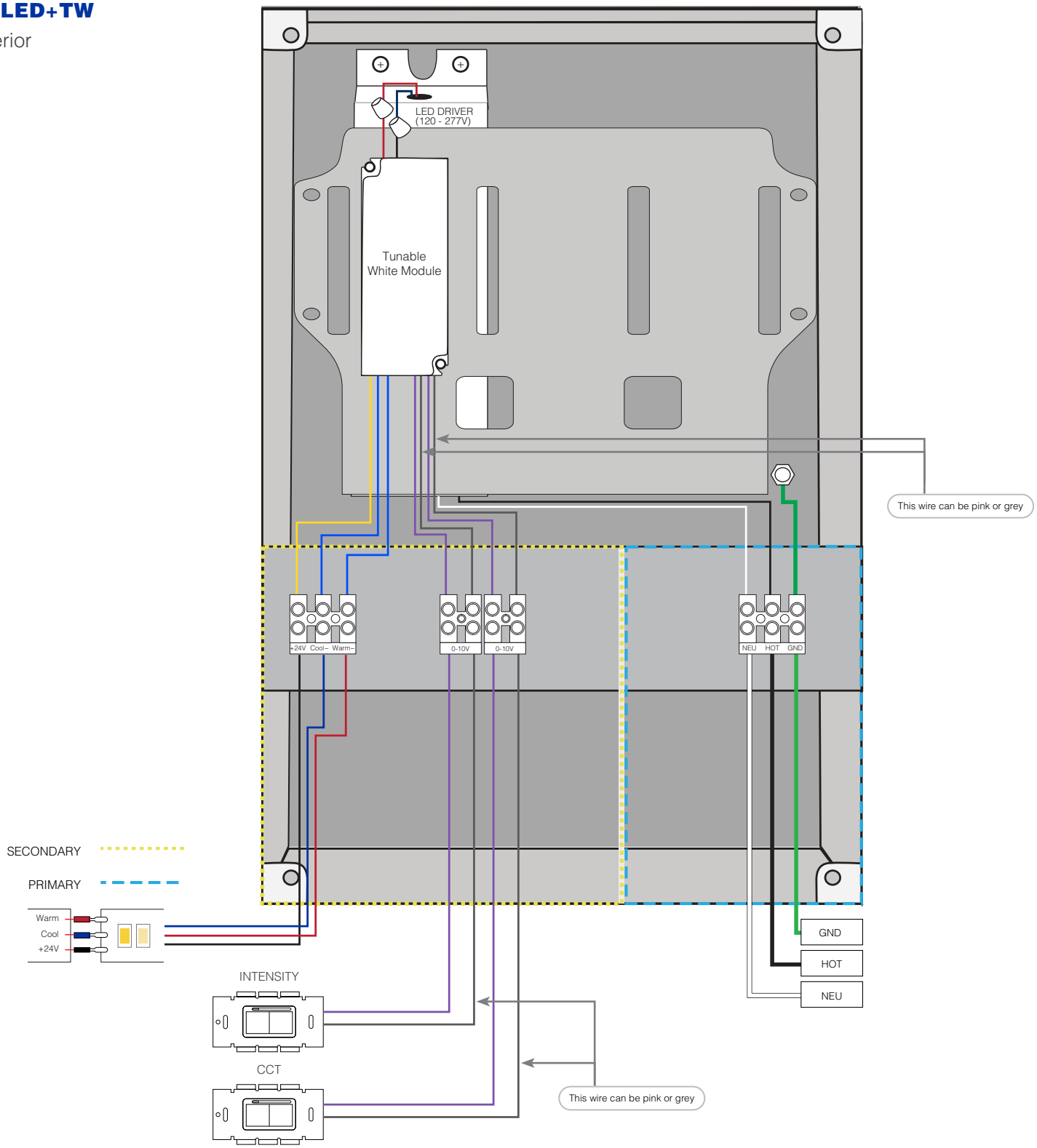

© 2023 Q-Tran Inc. All rights reserved | 155 Hill St. Milford, CT 06460 | 203-367-8777 | sales@q-tran.com | www.q-tran.com

INSTALLATION LED POWER SUPPLY - QTM-eLED+TW

CSA Requirements

- Suitable for indoor use
- This power supply must be installed according to the National Electric Code and local codes and ordinances and in accordance with applicable installation code by a person familiar with the construction and operation of the product and the hazards involved.
- Wear rubber shoes and work on a sturdy wooden or fiberglass ladder.
- This power supply is to be installed in a location where it is not likely to be contacted by non-electricians.
- To avoid a hazard to children, account for all parts and destroy all packaging materials.

QTM-eLED

INPUT VOLTAGE: ○ 120V

OUTPUT VOLTAGE: ○ 12V ○ 24V

CONTROL TYPE: ○ 0-10V

Model	Input Voltage (V)	Input Current (A)	Frequency	Nominal Output Voltage (VDC)	Nominal Output Wattage (W)	WIRE CONNECTION WITHOUT DIMMER
QTM-eLED-60	120	0.60	50/60	12	60	Red = +24V Blue = -24V
QTM-eLED-120	120	1.20	50/60	12	120	
QTM-eLED-180	120	1.80	50/60	12	180	
						WIRE CONNECTION WITH DIMMER
QTM-eLED-100	120	0.95	50/60	24	100	Red = +24V White = -24V
QTM-eLED-200	120	1.90	50/60	24	200	
QTM-eLED-300	120	2.85	50/60	24	300	

- Type Ic Recessed, Inherently Protected
  Type IC ENCASTRE, PROTECTION INHÉRENTE
- For Supply Connections Use Wire Rated For At Least 60 C.
- Suitable For Damp Locations
  CONVIENT AUX EMPLACEMENTS HUMIDES
- 50/60 Cycle
- Class 1 or Class 2

This product must be installed in accordance with the applicable installation code by a person familiar with the construction and operation of the product and the hazards involved.

CE PRODUIT DOIT ÊTRE INSTALLÉ SELON LE CODE D'INSTALLATION PERTINENT, PAR UNE PERSONNE QUI CONNAÎT BIEN LE PRODUIT ET SON FONCTIONNEMENT AINSI QUE LES RISQUES INHÉRENTS.

WARNING:
RISK OF FIRE. IF INSTALLATION INVOLVES RUNNING WIRE THROUGH A BUILDING STRUCTURE, SPECIAL WIRING METHODS ARE NEEDED. CONSULT A QUALIFIED ELECTRICIAN

LOW VOLTAGE LIGHTING SYSTEM
Q-Tran, Inc.
CLASS: **3425 - 15**
3425 - 95

Q-TRAN, INC.
MILFORD, CT U.S.A.
(203) 367-8777
WWW.Q-TRAN.COM

QTM-eLED

INPUT VOLTAGE: ○ 120V - 277V

OUTPUT VOLTAGE: ○ 12V ○ 24V

CONTROL TYPE: ○ 0-10V

Model	Input Voltage (V)	Input Current (A)	Frequency	Nominal Output Voltage (VDC)	Nominal Output Wattage (W)	WIRE CONNECTION WITHOUT DIMMER
QTM-eLED-60	120 / 277	0.60 / 0.29	50/60	12	60	Red = +24V Blue = -24V
QTM-eLED-120	120 / 277	1.20 / 0.58	50/60	12	120	
QTM-eLED-180	120 / 277	1.80 / 0.87	50/60	12	180	
						WIRE CONNECTION WITH DIMMER
QTM-eLED-100	120 / 277	0.95 / 0.40	50/60	24	100	Red = +24V White = -24V
QTM-eLED-200	120 / 277	1.90 / 0.80	50/60	24	200	
QTM-eLED-300	120 / 277	2.85 / 1.20	50/60	24	300	

- Type Ic Recessed, Inherently Protected
- For Supply Connections Use Wire Rated For At Least 60 C.
- Suitable For Damp Locations
- 50/60 Cycle
- Class 1 or Class 2

This product must be installed in accordance with the applicable installation code by a person familiar with the construction and operation of the product and the hazards involved.

WARNING:
RISK OF FIRE. IF INSTALLATION INVOLVES RUNNING WIRE THROUGH A BUILDING STRUCTURE, SPECIAL WIRING METHODS ARE NEEDED. CONSULT A QUALIFIED ELECTRICIAN

LOW VOLTAGE LIGHTING SYSTEM
Q-Tran, Inc.
CLASS: **3425 - 15**
3425 - 95

Q-TRAN, INC.
MILFORD, CT U.S.A.
(203) 367-8777
WWW.Q-TRAN.COM

© 2023 Q-Tran Inc. All rights reserved | 155 Hill St. Milford, CT 06460 | 203-367-8777 | sales@q-tran.com | www.q-tran.com