CRAVOT

MagRack X1 Hitch Bike Rack

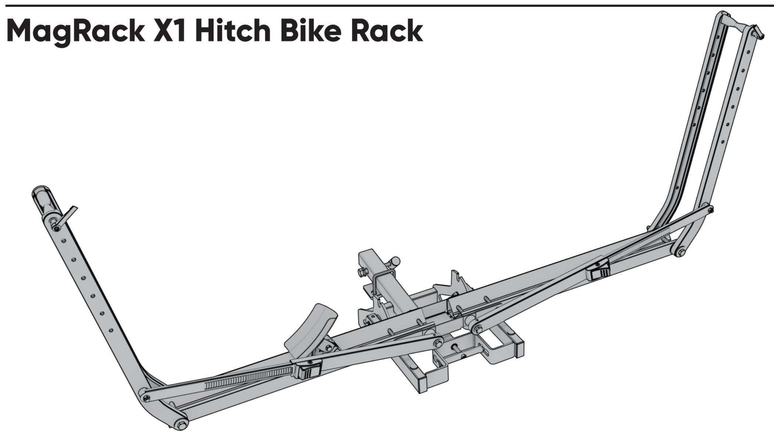

Assembly and User Manual

Parts number

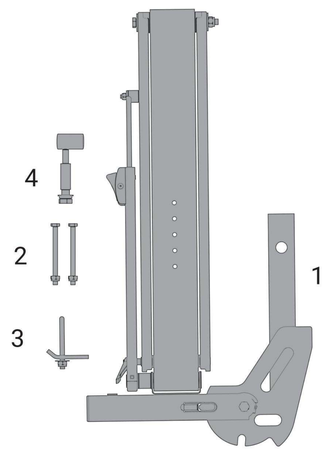

Parts List

Part#	Description	Qty
1	Rotating Base	1
2	Bolt Assembly	1
3	U-shaped Shock Absorption	1
4	Pin Lock	1

Required Tools（Not included）

Name	Imperial	Metric
Monkey Wrench		24mm
Open Wrench	11/16"	17mm

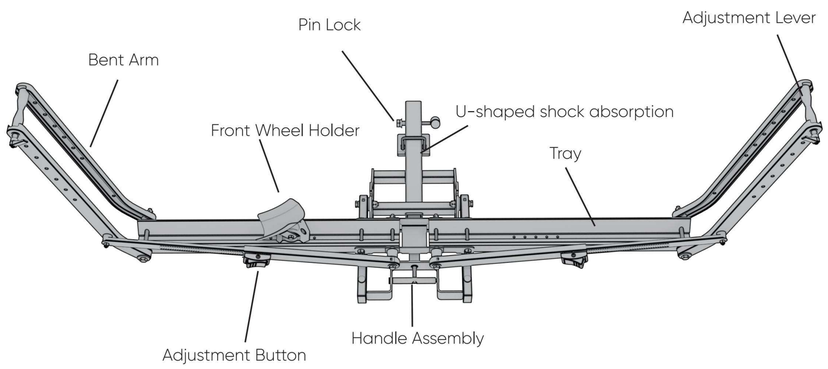

Installation

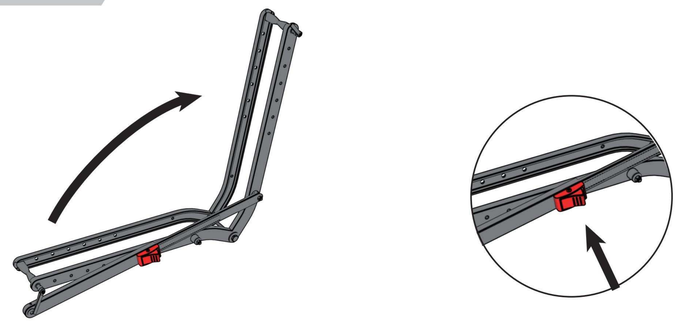

Press the Adjustment Button to unfold the Bent Arm in the direction shown in the picture.

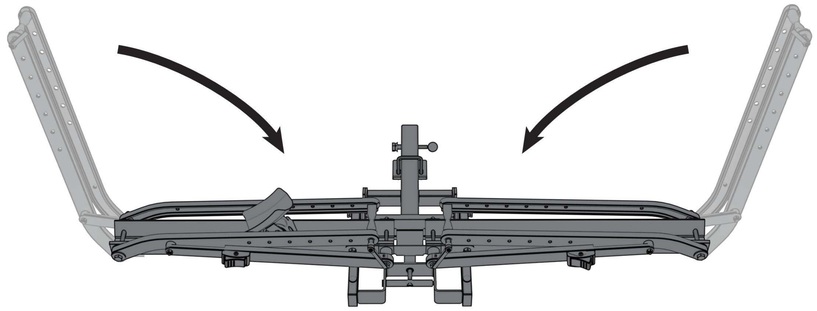

No need to press Adjustment Button when folding the bent arm assembly.

Step 1

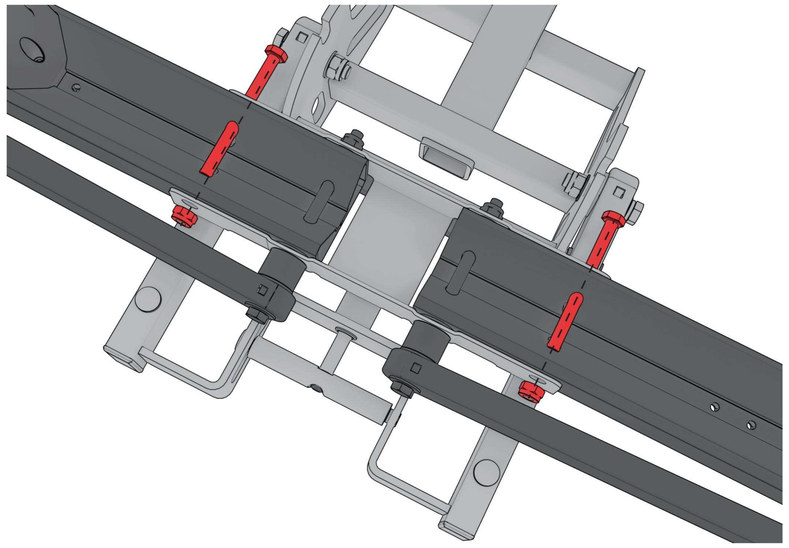

Install the Bent Arm and Rotating Base with Bolt Assembly.

Step 2

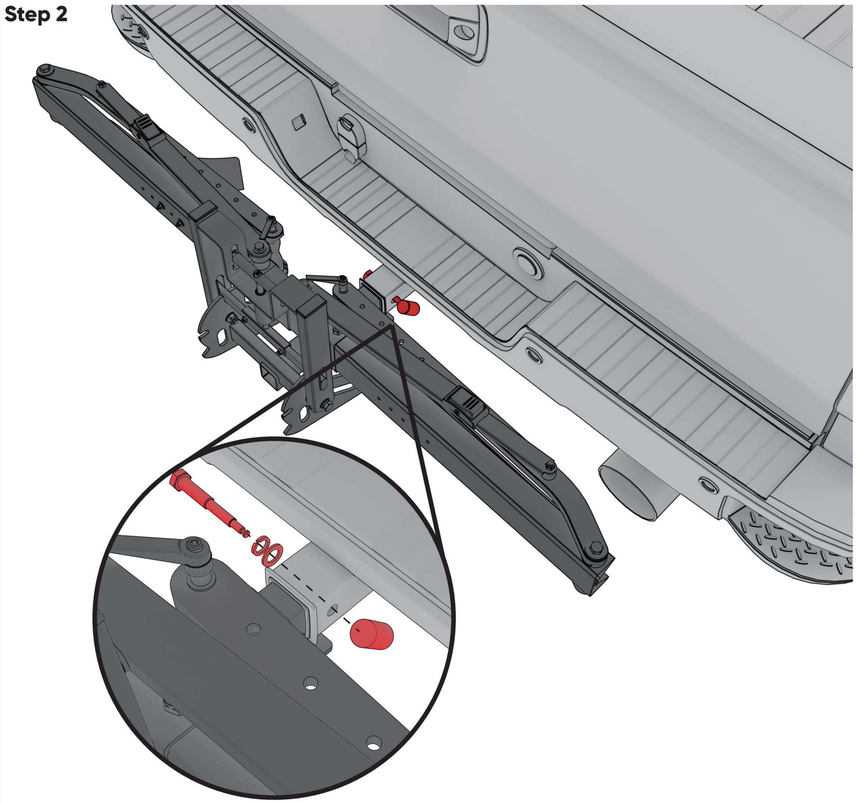

Insert the Bike Rack into the vehicle receiver and Place an **Pin Lock (4)**, through the Spring Washer and Flat Washer and the aligned holes. Insert the lock head and ensure it is securely fastened.

Folding Steps

Step 1

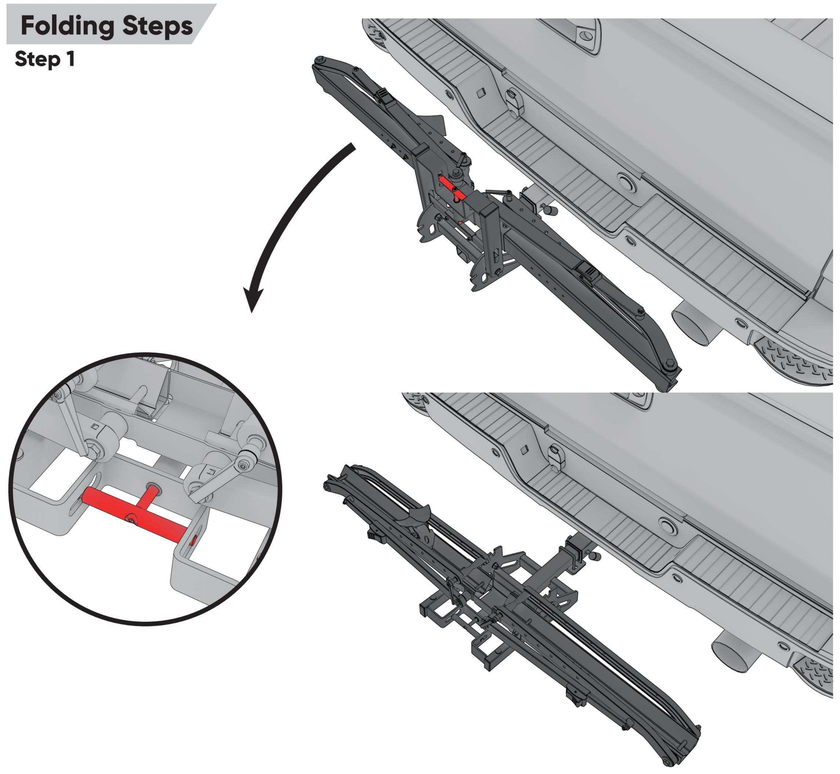

Hold the **Handle Assembly** and lower the bike rack to the lowest position, making sure the gear is correct.

Usage Steps

Step 1

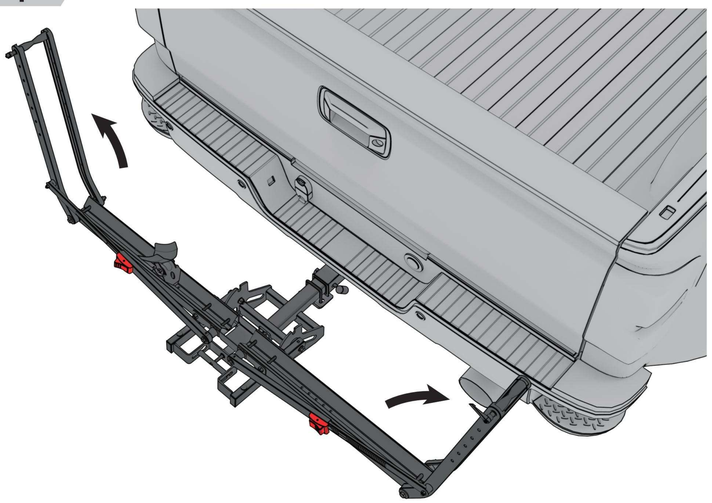

Press the Adjustment Button to unfold the Bent Arm in the direction shown in the picture.

Step 2

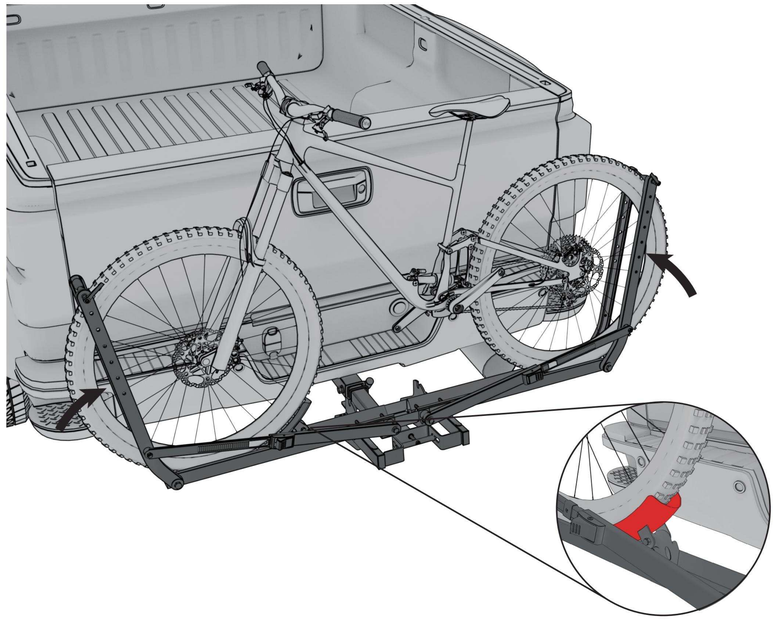

Install the bicycle on the Bike Rack, place the front wheel against the Front Wheel Holder, and tighten the Bent Arms on both sides to ensure that the front and rear wheels of the bicycle are firmly fixed.

Step 3

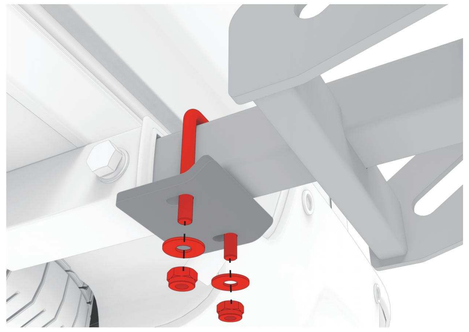

Tighten the nut on the **U-shaped shock absorption(3)** mechanism to reduce vibrations.

How to Adjust the Adjustment Lever Position

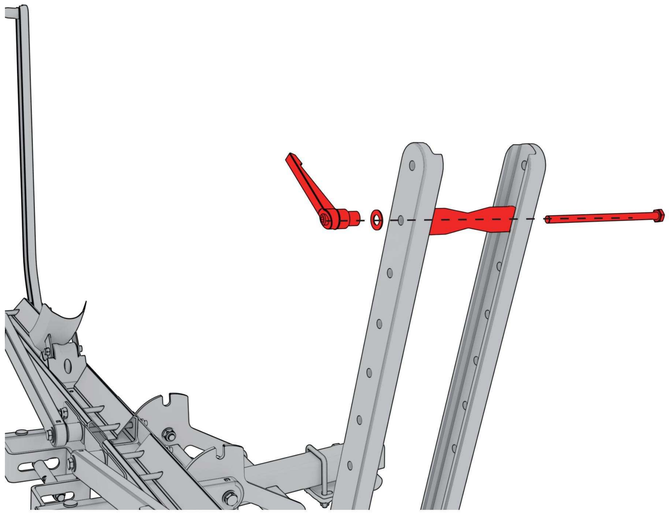

The position of the Adjustment Lever can be adjusted according to your needs. Loosen it counterclockwise and tighten it clockwise.

How to Adjust the Front Wheel Holder Position

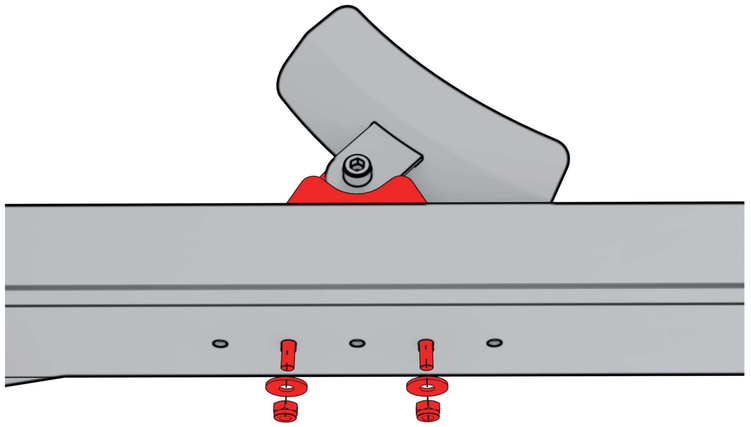

The position of the Front Wheel Holder can be adjusted according to your needs. There are three optional positions.

Dimension

Note: This product has an external interface and can be used with the CRAVOT MagRack XA product to add a bicycle rack

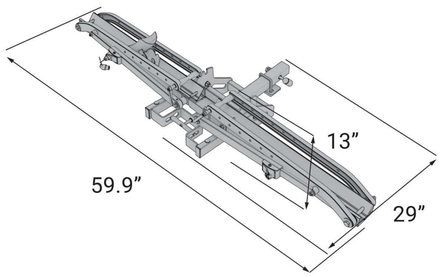

Technical Specifications

- Maximum Load: Bikes under 100LBS
- Maximum bike wheelbase 52''
- Applicable Types of Hitched Bike: Electric Bike/Regular Bike
- Not intended for use with mopeds, motorcycles or 3 wheels bikes
- Applicable for tires width within 3.5”

Model Name	CRAVOT MagRack X1
Description	2'' Hitch 1-Bike Rack
Material	Aluminum & Steel
Maximum Weight Capacity	100lbs
Applicable Vehicles	Vehicles with 2'' receiver
Package Size	34.7”x15.8”x18.9” in
Package Weight	65 LBS
Net weight	53 LBS

WARNINGS

- Do not overload beyond the bike rack’s weight capacity of 100lbs.
- Do not carry more than 1 bike on the carrier.
- The bike rack is not intended for transporting humans or animals.
- If you are planning to load only one bike, it is recommended to place it in the position closest to the vehicle.
- All bikes must be secured properly before operating the vehicle.
- Make sure the front of the bike(s), when mounted, are at or above the bottom of the bumper to avoid damage to the bike(s).
- Do not carry flammable items on the bike rack.
- If using the bike rack to transport electric bikes, please remove the batteries from the bikes prior to transporting them. This will help reduce the weight supported by the carrier.
- During long trips, frequently check the straps and bike position, especially if traveling on rough terrain.
- Please do not make alterations to the product, as it can pose potential hazards to your safety.

CRAVOT Warranty Policy

Thank you for choosing CRAVOT. We are committed to providing you with quality products and exceptional service. This Limited Warranty Policy outlines the terms and conditions of our warranty support, including considerations for varying state laws in the United States and important disclaimers.

- **Warranty Period**

Each of our products is backed by a Limited Warranty. This product is covered by a 1-year warranty from the date of purchase. The duration of the warranty varies based on the product category and manufacturing standards. Specific warranty details for your product can be found in the product manual or on our website. This warranty covers defects in materials and workmanship under normal use. Please retain your proof of purchase to validate your warranty claim.

- **Exclusions from Warranty**

This warranty does not cover damages resulting from improper use, accidents, unauthorized repair or modifications, or normal wear and tear.
Products outside of the warranty period or damages not covered under this warranty can be repaired at a reasonable cost if applicable (Determined by CRAVOT).

- **Claiming Warranty Service**

To claim warranty service, please contact our customer service with your proof of purchase and a description of the issue.
Our customer service team will guide you through the warranty process and provide necessary support.

- **Repair/Replacement Policy**

Qualifying products that are damaged due to non-human factors will be repaired or replaced free of charge within the warranty period. Replacement products or parts may be new or refurbished but will function like new.
We strive to ensure that the repair or replacement process is quick and seamless.

- **State Law Considerations**

This warranty gives you specific legal rights, and you may also have other rights which vary from state to state in the United States.
Some states do not allow limitations on how long an implied warranty lasts or the exclusion or limitation of incidental or consequential damages, so the above limitations or exclusions may not apply to you.

- **Disclaimer of Liability**

It is crucial to follow the instructions provided in the product manual for proper use. CRAVOT is not responsible for any damages or losses resulting from improper operation or handling of the product.
This disclaimer of liability includes but is not limited to personal injury, damage to property, or any other losses incurred due to non-compliance with the provided instructions. The warranty does not apply to the product when resold as a second-hand item.

- **Customer Support**

Our customer support team is always ready to assist with any questions or concerns regarding our products or services.

Please contact us through our provided contact methods, and we will be more than happy to serve you.
Thank you for your support and trust in CRAVOT. We are committed to delivering high-quality products and ensuring your satisfaction with our services.

Get Support

cravot.com
support@cravot.com

THANK YOU FOR CHOOSING A CRAVOT HITCH BIKE RACK!

- The CRAVOT Bike racks are meticulously designed to ensure stability and safety when hitching your bikes. Prior to assembly, carefully read through this Owner’s Manual, as it provides essential information for both assembly and adjustment. CRAVOT is committed to delivering a bike rack that is properly assembled and accurately adjusted upon leaving our factory. If you have any inquiries after reviewing this manual, please reach out to our Help Center. Our customer service team is ready to address questions regarding assembly, performance, operation, service parts, or general services.

- Keep this Owner’s Manual in a secure location for future reference. All content in this manual is subject to change as we continuously refine our products. This manual incorporates warnings, cautions, and notes, so it is crucial to thoroughly read all information for your safety. Pay special attention to any information marked with a warning or caution symbol. Additionally, take note of information preceded by NOTICE, as it contains essential details related to safety. Always ensure proper maintenance and care for your bike rack to preserve its original quality and safety features.

VERSION:BRA4152250225