SEKTION

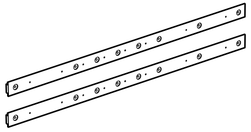

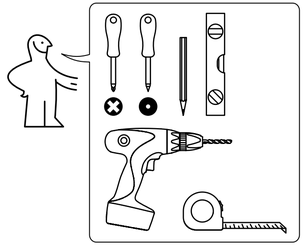

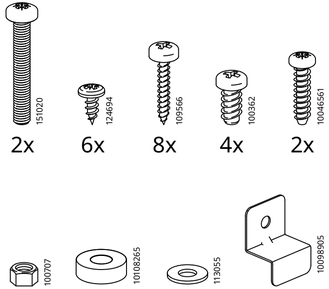

Design and Quality
IKEA of Sweden

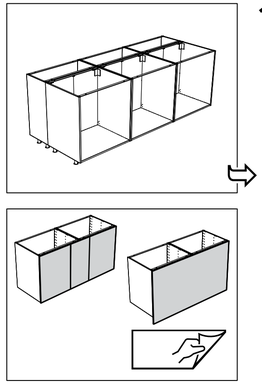

1

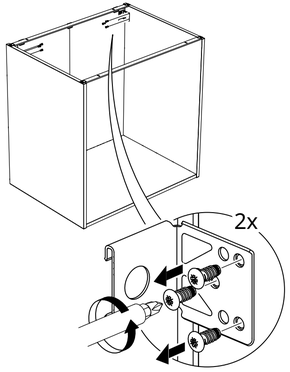

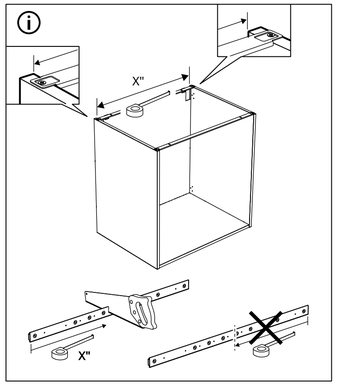

2

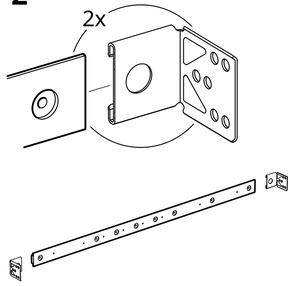

3

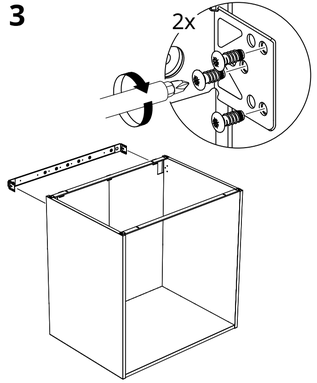

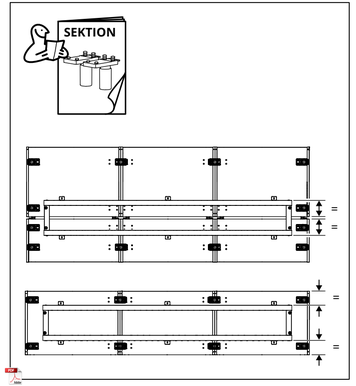

4

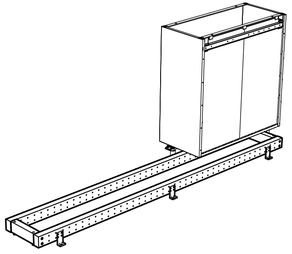

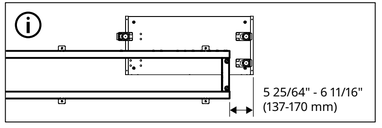

5

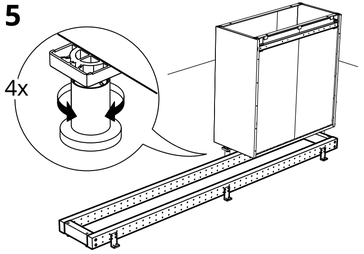

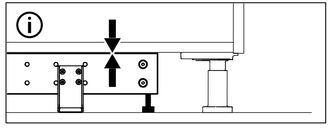

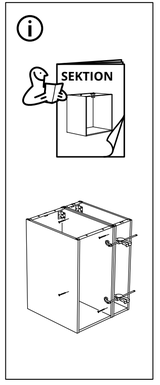

6

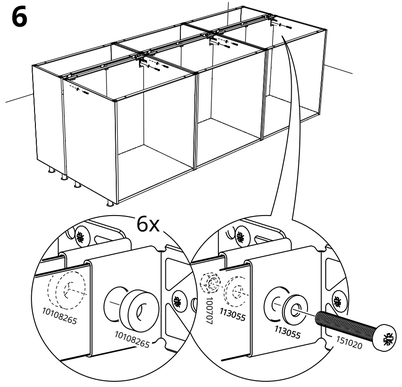

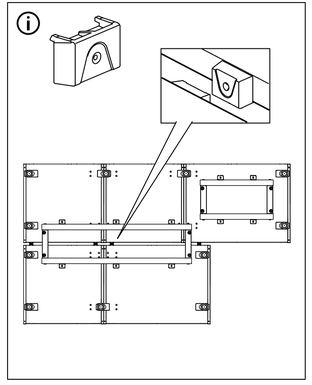

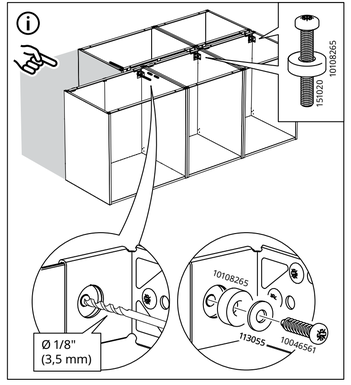

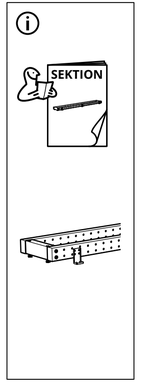

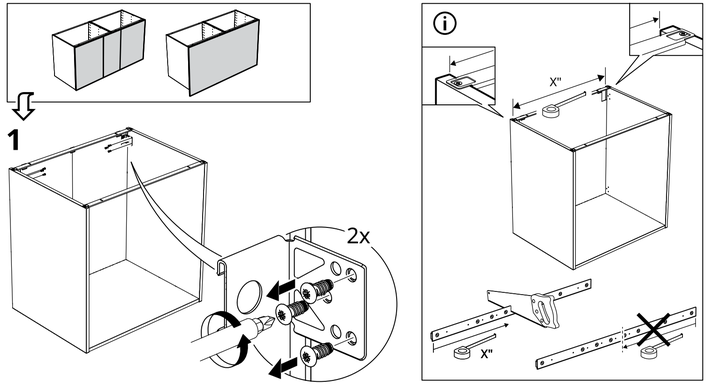

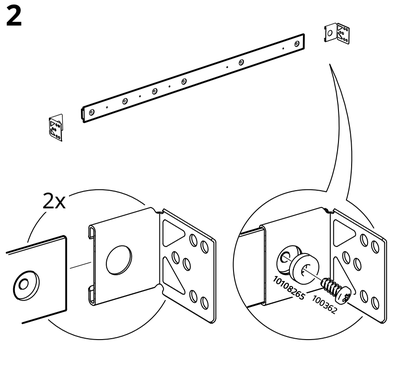

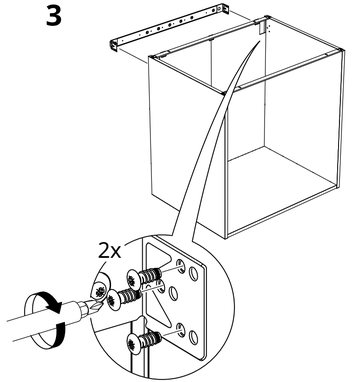

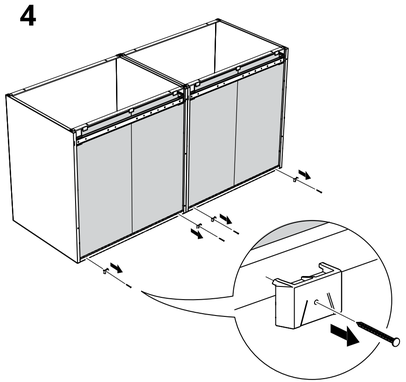

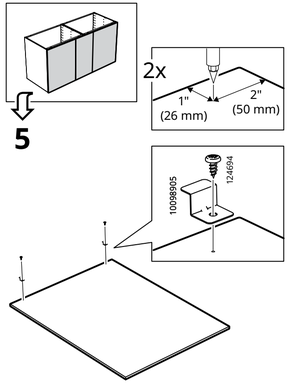

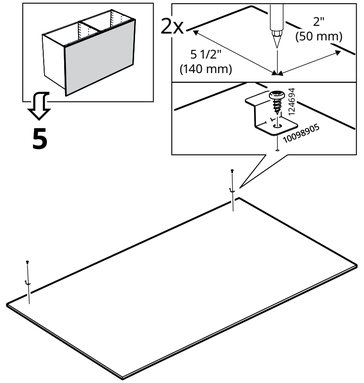

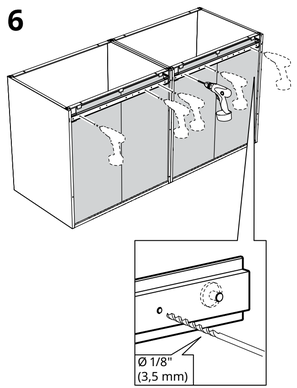

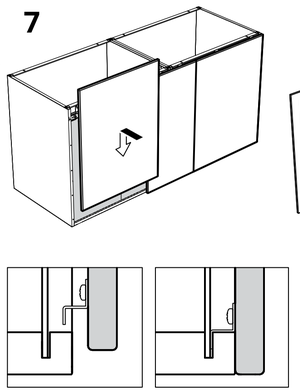

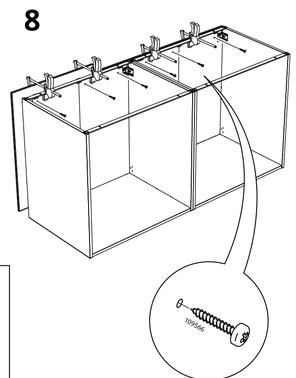

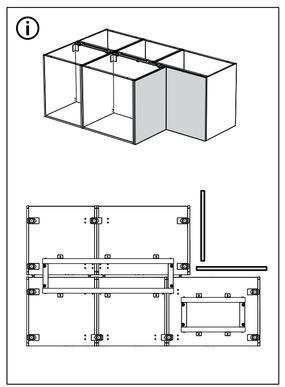

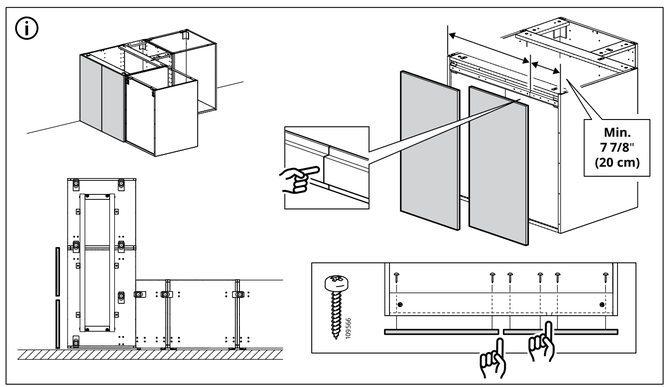

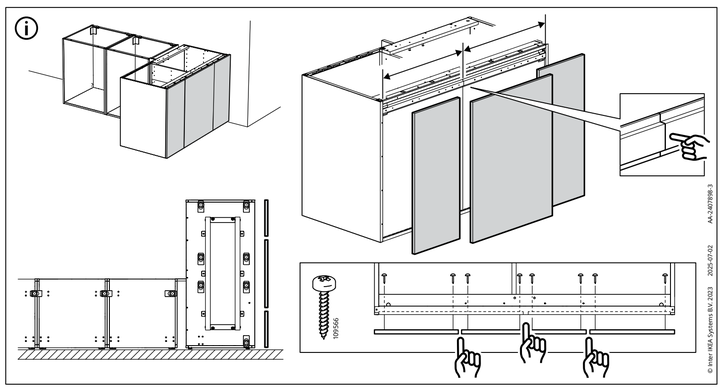

© Inter IKEA Systems B.V. 2023 2020-07-02 AA-2407898-3