EN

TECHNICAL MANUAL

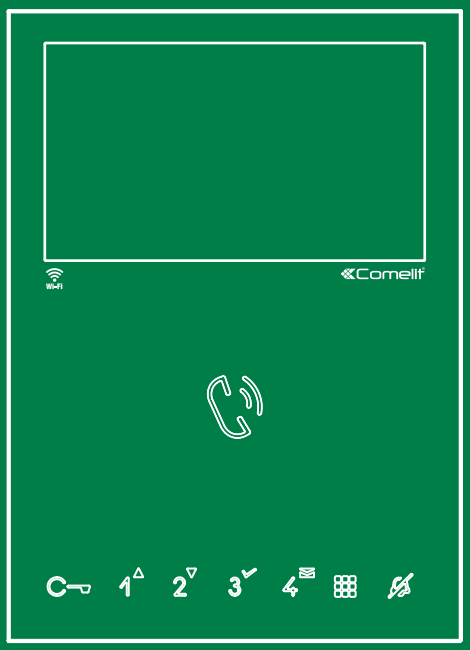

MYCOMELIT: THE APP FOR PROFESSIONALS

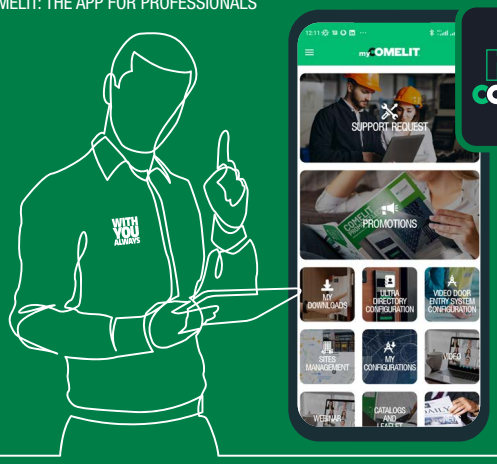

my COMELIT

FREE DOWNLOAD

Download on the App Store

GET IT ON Google Play

WORKS WITH • FONCTIONNE AVEC • WERKT MET • FUNCIONA CON • FUNCIONA COM • FUNZIONA CON

echo show

works with alexa

works with Hey Google

Amazon, Alexa and all related logos are trademarks of Amazon.com, Inc. or its affiliates.

Mini Hands-Free Wi-Fi Door Entry Monitor

Art. 6741W - Art. 6741W/BM

Comelit®

Passion.Technology.Design.

Warning

- This Comelit product has been designed and manufactured for use in the creation of audio and video communication systems in residential, commercial, industrial and public buildings.
- All activities connected to the installation of Comelit products must be carried out by qualified technical personnel, with careful observation of the indications provided in the manuals / instruction sheets supplied with those products.
- Disconnect the power supply before carrying out any operations on the wiring.
- Use wires with a cross-section suited to the distances involved, observing the instructions provided in the system manual.
- We advise against running the system wires through the same duct as power cables (230V or higher).
- To ensure Comelit products are used safely: carefully observe the indications provided in the manuals / instruction sheets; make sure the system created using Comelit products has not been tampered with / damaged.
- Comelit products do not require maintenance aside from routine cleaning, which should be carried out in accordance with the indications provided in the manuals /instruction sheets. Any repairs must be carried out: for the products themselves, exclusively by **Comelit Group S.p.A.**, for the systems, by qualified technical personnel.
- **Comelit Group S.p.A.** accepts no liability for any purpose other than the intended use, or failure to observe the indications and warnings contained in this manual / instruction sheet. **Comelit Group S.p.A.** reserves the right to change the information provided in this manual / instruction sheet at any time and without prior notice.
- The manufacturer,**Comelit Group S.p.A.**, hereby declares that the radio equipment used in art. 6741W and art. 6741W/BM conforms to directive 2014/53/EU. The full EU conformity declarations are available at the following web addresses: pro.comelitgroup.com/it-it/prodotto/6741w and pro.comelitgroup.com/it-it/prodotto/6741w-bm

CE

Contents

Description 3

Touch-sensitive buttons 4

Description 4

Indicator LED 4

Technical specifications 5

Installation 6

Addressing table 6

Building mode, Kit mode 7

Introduction 7

Configuration 7

Main and secondary door entry monitors 8

Power Management 8

Surface mounting 9

Removing the door entry monitor 10

Removing / fitting the terminal 10

Connections 11

Press and hold buttons 11

Button configuration 12

Configuration using the DIP-switches 12

Standard configurations 12

Advanced configuration 13

Configuration via the menu 18

WiFree device operation 18

Create the commands to be associated with the buttons 19

Operating third-party devices with functions that can be activated via URL 20

Changing the ringtone 21

Programming reset 21

System performance and layouts 22

Diagrams for systems with art. 8451V or 8451V/BM 22

Diagrams for systems with power supply unit art. 1210 or 1210A 27

System diagrams with power supply unit art. 4888C / 4888CU 30

System performance and layouts 35

Description

Hands-free Mini Wi-Fi door entry monitor for Simplebus2 system which, when used in conjunction with the Comelit app (available to download free of charge from the Google and Apple stores) and/or the Alexa/Ecoshow/Google Assistant voice assistants, can be used to answer calls directly from your smartphone/tablet/voice assistants, both locally and remotely. It can be used to enable the “Face recognition” function directly from the app, to automatically - once a person has been recognised - send a lock-release command (enabled by default), trigger an actuator to control a light or additional opening and receive notification when a known individual makes a call.

It allows operation of the new Comelit WiFree series of Wi-Fi home automation devices. It is also possible to control devices with different protocols, thereby integrating any third-party home automation system for controlling gates or outdoor lights, or for activating scenarios, etc.

Replacing an old door entry monitor to benefit from all the advantages offered by Wi-Fi technology is no longer problematic: Mini Wi-Fi is actually compatible with all types of Comelit Simplebus2 colour video entry system and does not require any additional masonry work.

Art. 6741W is supplied with a mounting backplate and riser distribution terminal art. 1214/2C.

Art. 6741W/BM is equipped with a magnetic induction audio amplification system, **and does not come with backplate art. 6710**, which is available to purchase separately.

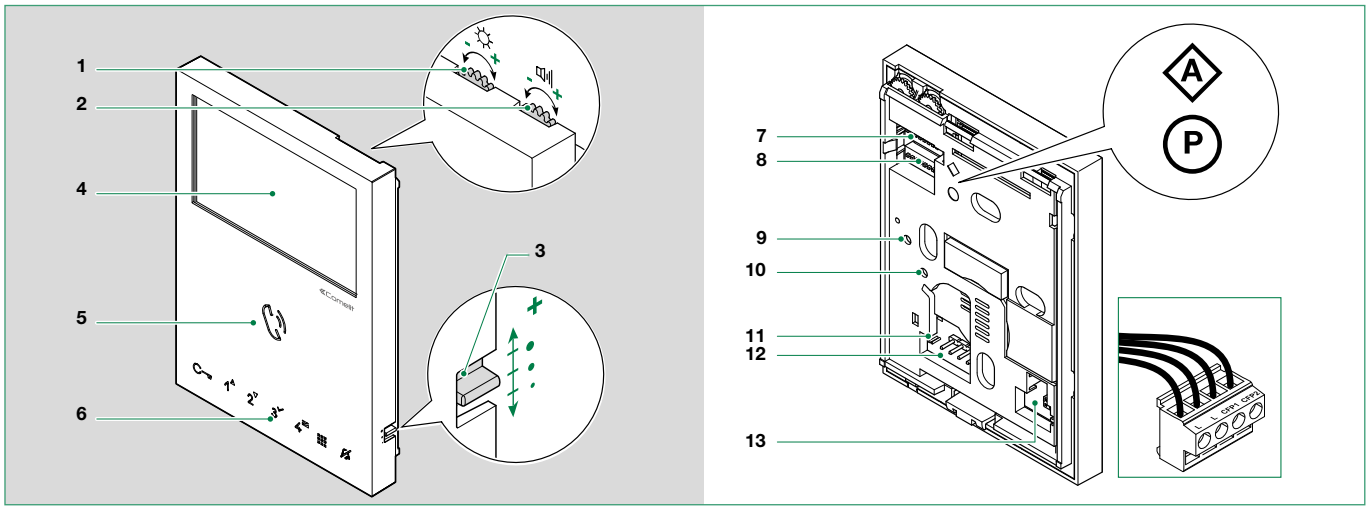

1. Brightness control
   - ▶ To increase the value, turn clockwise
2. Loudspeaker volume control
   - ▶ To increase the value, turn clockwise
3. Call volume adjustment (high - medium - low)
4. 4.3’’ / 16:9 LCD screen
5. Speaker and audio activation button
6. Touch-sensitive buttons
7. **S1** Ⓐ DIP-switches for user code programming (see **“Addressing table” on page 6**)
8. **S2** Ⓟ DIP-switches for programming buttons and functions

   DIP 1-2-3-4 for key function programming

   DIP 5-6 for access to programming

   DIP 7 for power supply voltage management (see **“Power Management” on page 8**). Default = ON

   ⚠ ***S2 DIP 7 must always be set to ON, even in systems with 4888C and 4888CU (as in the factory settings).***

   DIP 8 *(not used)*

9.10. Factory setting - DO NOT CHANGE!

11. **CV 5** Jumper for video closure. In systems with more than one door entry monitor connected in cascade, only the door entry monitor furthest away must have CV5 closed.
12. Pin for securing terminal block
13. **S3** DIP-switch:

    DIP 1 to set the correct operating mode (see **“Building mode, Kit mode” on page 7**)

    DIP 2 *(not used)*

Terminal block for system connection:

LL BUS line connection terminals

CFP1 CFP2 Floor door call input

Touch-sensitive buttons

Description

▶ Press and release the desired button once to activate the associated function.

Wait for approx. 1 sec. before pressing the same button again; rapidly pressing the same button repeatedly will cancel the command which has just been sent.

	Audio activation	
	Lock-release control	[programmable]
1	**Actuator control**	[programmable]
2	** **Self Activation**	[programmable]
3	**Secondary switchboard call**	[programmable]
4	** **Door opening upon call (Doctor)** *Automatic door opening on receipt of call from external entrance panel.*	[programmable]
	Menu	[not programmable]
	Silent mode (Privacy). *Ringtone in silent mode on receipt of a call from the external entrance panel and the switchboard, and an intercom call.*	[not programmable]
	Arrow keys	
	Confirm selection	
	Message menu	

** *Pressing and holding enables / disables the function, see* **"Press and hold buttons" on page 11**

Indicator LED

	Audio	FLASHING LED	*Incoming call.*
		STEADY LED in call	*In communication.*
		STEADY LED in standby	*Automatic answer (hands-free) mode enabled.*
	Lock-release	FLASHING LED	*Incoming call.*
		FLASHING LED (slow)	*Door open indication.*
		1 FLASH	*Door opening confirmation.*
	Silent mode (Privacy)	STEADY LED	*Silent (Privacy) mode enabled.*
		STEADY AND FLASHING LED (3 flashes every 5 sec.)	*Door opening upon call (Doctor) function and Silent (Privacy) mode enabled.*
		OFF AND FLASHING LED (3 flashes every 5 sec.)	*Door opening upon call (Doctor) enabled.*
		4 FLASHES	*The called device is busy.*
	Menu	FLASHING LED	*User notification present.*

Technical specifications

		6741W	6741W/BM
GENERAL DATA	Height (mm)	160	160
	Width (mm)	115	115
	Depth (mm)	22	22
	Product colour	White RAL9003	White RAL9003
	Coating material type	ABS	ABS
	Product weight (g)	400	400
	Surface mounting	Yes	Yes
	Desk base mounting	Yes, with specific accessory	Yes, with specific accessory
COMPATIBLE SYSTEMS	Simplebus 2 audio/video with power supply unit art. 4888C	Yes	Yes
	Simplebus 2 audio/video with power supply unit art. 1210/1210A	Yes	Yes
	Simplebus 2 audio/video kit with power supply unit art. 1209	Yes	Yes
DISPLAY	Display size (")	4.3	4.3
	Aspect ratio	16:9	16:9
	Resolution (pixels)	480x272	480x272
	On-screen menu (OSD)	Yes	Yes
	Type of display	LCD	LCD
AUDIO SPECIFICATIONS	Type	Hands-free	Hands-free
	Magnetic induction function	-	Yes
	Microphone	6 mm (Ø), Omnidirectional	6 mm (Ø), Omnidirectional
	Loudspeaker	36 mm (Ø), 40 Ohm, 1W	36 mm (Ø), 40 Ohm, 1W
	Technologies implemented	Full-Duplex	Full-Duplex
ELECTRICAL SPECIFICATIONS	Type of power supply	Power supply via video entry bus	Power supply via video entry bus
	Power supply voltage	22 to 34 VDC (Bus)	22 to 34 VDC (Bus)
	Absorption in standby (W)	0.1	0.1
	Absorption in standby in kit mode (W)	1.9	1.9
	Maximum absorption (W)	8.1	8.1
HARDWARE CHARACTERISTICS	Type of buttons	Capacitive	Capacitive
	Service buttons	Lock-release, Answer, Silent (Privacy), Menu, Messages, Door open	Lock-release, Answer, Silent (Privacy), Menu, Messages, Door open
	No. of programmable buttons for additional functions	4	4
	Terminals	L L CFP1 CFP2	L L CFP1 CFP2
	Removable terminals	Yes	Yes
	Number of inputs (No.)	1	1
SETTINGS	Loudspeaker volume	Yes	Yes
	Ringtone volume	Yes	Yes
	Display brightness control	Yes	Yes
NETWORK AND COMMUNICATION PROTOCOLS	Type of Wi-Fi connection	IEEE 802.11 b/g/n, 2.4 Ghz, 13 channels	IEEE 802.11 b/g/n, 2.4 Ghz, 13 channels
	Encryption method and supported authentication	Networks OPEN WPA-PSK, TKIP WPA2-PSK, AES WEP 64-bit (codes with 5 ASCII digits or 10 hexadecimals), WEP 128-bit (codes with 13 ASCII digits or 26 hexadecimals)	Networks OPEN WPA-PSK, TKIP WPA2-PSK, AES WEP 64-bit (codes with 5 ASCII digits or 10 hexadecimals), WEP 128-bit (codes with 13 ASCII digits or 26 hexadecimals)
	IP address assignment	DHCP	DHCP
	IoT connection to Comelit Cloud	Yes	Yes
	Firmware updating via Comelit Cloud	Yes	Yes
ENVIRONMENTAL AND CONFORMITY SPECIFICATIONS	IP protection rating	IP30	IP30
	Operating temperature (°)	5 to 40	5 to 40
	Operating humidity (max. RH) (%)	25 to 75	25 to 75
	Environmental class	I	I
	CE certification	RoHS II - 2011/65/EU (EN 50581:2012), RED 2014/53/EU (EN 60950-1:2006+A11:2009+A1:2010+A12:2011, +A2:2013, EN 62311:2008, EN 61000-6-1:2007, EN 61000-6-3:2007 + A1:2011, ETSI EN 301 489-1 V2.2.0, ETSI EN 301 489-17 V3.2.0, ETSI EN 300 328 V2.1.1)	RoHS II - 2011/65/EU (EN 50581:2012), RED 2014/53/EU (EN 60950-1:2006+A11:2009+A1:2010+A12:2011, +A2:2013, EN 62311:2008, EN 61000-6-1:2007, EN 61000-6-3:2007 + A1:2011, ETSI EN 301 489-1 V2.2.0, ETSI EN 301 489-17 V3.2.0, ETSI EN 300 328 V2.1.1)
GENERAL FEATURES	Compatible with Comelit App	Yes	Yes
	Lock-release	Yes	Yes
	Self Activation	Yes	Yes
	Intercom calls	Yes	Yes
	Actuator control	Yes	Yes
	Switchboard call	Yes	Yes
	Input for floor door call	Yes	Yes
	Silent mode (Privacy)	Yes	Yes
	Video memory	Yes	Yes
	Door opening upon call (Doctor)	Yes	Yes
	Automatic answer (hands-free)	Yes	Yes
	Door open indication	Yes	Yes
	Multiple address	Yes	Yes
	Customisable ringtone	Yes	Yes
	Alarm call transmission	Yes	Yes
	Date/time display	Yes	Yes
	Hands-free function	Yes	Yes
	Selective intercom call	Yes	-
	Integration with voice assistants	Yes	Yes
	Face recognition	Yes	Yes

Installation

A user code (call code) must be assigned to the door entry monitor; to configure it simply set the S1 DIP-switches corresponding to the desired code to ON, in accordance with the **"Addressing table"**.

Addressing table

Code	DIP-switch ON	Code	DIP-switch ON	Code	DIP-switch ON	Code	DIP-switch ON	Code	DIP-switch ON	Code	DIP-switch ON	Code	DIP-switch ON
1	1	**36**	3.6	**71**	1,2,3,7	**106**	2,4,6,7	**141**	1,3,4,8	**176**	5,6,8	**211**	1,2,5,7,8
2	2	**37**	1,3,6	**72**	4.7	**107**	1,2,4,6,7	**142**	2,3,4,8	**177**	1,5,6,8	**212**	3,5,7,8
3	1.2	**38**	2,3,6	**73**	1,4,7	**108**	3,4,6,7	**143**	1,2,3,4,8	**178**	2,5,6,8	**213**	1,3,5,7,8
4	3	**39**	1,2,3,6	**74**	2,4,7	**109**	1,3,4,6,7	**144**	5.8	**179**	1,2,5,6,8	**214**	2,3,5,7,8
5	1.3	**40**	4.6	**75**	1,2,4,7	**110**	2,3,4,6,7	**145**	1,5,8	**180**	3,5,6,8	**215**	1,2,3,5,7.8
6	2.3	**41**	1,4,6	**76**	3,4,7	**111**	1,2,3,4,6.7	**146**	2,5,8	**181**	1,3,5,6,8	**216**	4,5,7,8
7	1,2,3	**42**	2,4,6	**77**	1,3,4,7	**112**	5.67	**147**	1,2,5,8	**182**	2,3,5,6,8	**217**	1,4,5,7,8
8	4	**43**	1,2,4,6	**78**	2,3,4,7	**113**	1,5,6,7	**148**	3,5,8	**183**	1,2,3,5,6.8	**218**	2,4,5,7,8
9	1.4	**44**	3,4,6	**79**	1,2,3,4,7	**114**	2,5,6,7	**149**	1,3,5,8	**184**	4,5,6,8	**219**	1,2,4,5,7.8
10	2.4	**45**	1,3,4,6	**80**	5.7	**115**	1,2,5,6,7	**150**	2,3,5,8	**185**	1,4,5,6,8	**220**	3,4,5,7,8
11	1,2,4	**46**	2,3,4,6	**81**	1,5,7	**116**	3,5,6,7	**151**	1,2,3,5,8	**186**	2,4,5,6,8	**221**	1,3,4,5,7.8
12	3.4	**47**	1,2,3,4,6	**82**	2,5,7	**117**	1,3,5,6,7	**152**	4,5,8	**187**	1,2,4,5,6.8	**222**	2,3,4,5,7.8
13	1,3,4	**48**	5.6	**83**	1,2,5,7	**118**	2,3,5,6,7	**153**	1,4,5,8	**188**	3,4,5,6,8	**223**	1,2,3,4,5,7,8
14	2,3,4	**49**	1,5,6	**84**	3,5,7	**119**	1,2,3,5,6.7	**154**	2,4,5,8	**189**	1,3,4,5,6.8	**224**	6,7,8
15	1,2,3,4	**50**	2,5,6	**85**	1,3,5,7	**120**	4,5,6,7	**155**	1,2,4,5,8	**190**	2,3,4,5,6.8	**225**	1,6,7,8
16	5	**51**	1,2,5,6	**86**	2,3,5,7	**121**	1,4,5,6,7	**156**	3,4,5,8	**191**	1,2,3,4,5,6,8	**226**	2,6,7,8
17	1.5	**52**	3,5,6	**87**	1,2,3,5,7	**122**	2,4,5,6,7	**157**	1,3,4,5,8	**192**	7.8	**227**	1,2,6,7,8
18	2.5	**53**	1,3,5,6	**88**	4,5,7	**123**	1,2,4,5,6.7	**158**	2,3,4,5,8	**193**	1,7,8	**228**	3,6,7,8
19	1,2,5	**54**	2,3,5,6	**89**	1,4,5,7	**124**	3,4,5,6,7	**159**	1,2,3,4,5.8	**194**	2,7,8	**229**	1,3,6,7,8
20	3.5	**55**	1,2,3,5,6	**90**	2,4,5,7	**125**	1,3,4,5,6.7	**160**	6.8	**195**	1,2,7,8	**230**	2,3,6,7,8
21	1,3,5	**56**	4,5,6	**91**	1,2,4,5,7	**126**	2,3,4,5,6.7	**161**	1,6,8	**196**	3,7,8	**231**	1,2,3,6,7.8
22	2,3,5	**57**	1,4,5,6	**92**	3,4,5,7	**127**	1,2,3,4,5,6,7	**162**	2,6,8	**197**	1,3,7,8	**232**	4,6,7,8
23	1,2,3,5	**58**	2,4,5,6	**93**	1,3,4,5,7	**128**	8	**163**	1,2,6,8	**198**	2,3,7,8	**233**	1,4,6,7,8
24	4.5	**59**	1,2,4,5,6	**94**	2,3,4,5,7	**129**	1.8	**164**	3,6,8	**199**	1,2,3,7,8	**234**	2,4,6,7,8
25	1,4,5	**60**	3,4,5,6	**95**	1,2,3,4,5.7	**130**	2.8	**165**	1,3,6,8	**200**	4,7,8	**235**	1,2,4,6,7.8
26	2,4,5	**61**	1,3,4,5,6	**96**	6.7	**131**	1,2,8	**166**	2,3,6,8	**201**	1,4,7,8	**236**	3,4,6,7,8
27	1,2,4,5	**62**	2,3,4,5,6	**97**	1,6,7	**132**	3.8	**167**	1,2,3,6,8	**202**	2,4,7,8	**237**	1,3,4,6,7.8
28	3,4,5	**63**	1,2,3,4,5.6	**98**	2,6,7	**133**	1,3,8	**168**	4,6,8	**203**	1,2,4,7,8	**238**	2,3,4,6,7.8
29	1,3,4,5	**64**	7	**99**	1,2,6,7	**134**	2,3,8	**169**	1,4,6,8	**204**	3,4,7,8	**239**	1,2,3,4,6,7,8
30	2,3,4,5	**65**	1.7	**100**	3,6,7	**135**	1,2,3,8	**170**	2,4,6,8	**205**	1,3,4,7,8	***240**	5,6,7,8
31	1,2,3,4,5	**66**	2.7	**101**	1,3,6,7	**136**	4.8	**171**	1,2,4,6,8	**206**	2,3,4,7,8		
32	6	**67**	1,2,7	**102**	2,3,6,7	**137**	1,4,8	**172**	3,4,6,8	**207**	1,2,3,4,7.8		
33	1.6	**68**	3.7	**103**	1,2,3,6,7	**138**	2,4,8	**173**	1,3,4,6,8	**208**	5,7,8		
34	2.6	**69**	1,3,7	**104**	4,6,7	**139**	1,2,4,8	**174**	2,3,4,6,8	**209**	1,5,7,8		
35	1,2,6	**70**	2,3,7	**105**	1,4,6,7	**140**	3,4,8	**175**	1,2,3,4,6.8	**210**	2,5,7,8		

Example: setting for address 5

cod	DIP ON
1	1
2	2
3	1,2
4	3
5	1,3

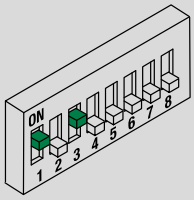

NOTES

- In BUILDING mode we recommend choosing user codes with the lowest available values.
- Code *240 is reserved for the porter switchboard.

Building mode, Kit mode

Introduction

In **Building** mode you can answer video entry phone calls locally and remotely via your smartphone/tablet/voice assistants.

In **Kit** mode you can answer video entry phone calls locally and remotely via your smartphone/tablet/voice assistants, in addition to implementing self activation and controlling actuators.

- Kit mode is possible in systems:
  - powered by art. **1210/1210A**
  - with a maximum of 20 internal units in total
  - for up to 10 x 6741W (/BM) units. Other 6741W (/BM) units should be set in Building mode!

  If there are more than 20 internal units, Kit mode is not possible; all 6741W (/BM) *will therefore need to be set in Building mode!*

- Kit mode is possible in systems:
  - powered by art. **1209**
  - with a maximum of 16 internal units in total
  - for up to 4 x 6741W (/BM) units

- Kit mode is possible in systems:
  - powered by art. **4888C (with revision index greater than or equal to 053)**
  - for a variable number of 6741W (/BM) in accordance with the table below:

Maximum number of internal units in the system (including art. 6741W (/BM) units in Kit mode)	Maximum no. of 6741W (/BM) units in Kit mode
30	6
31 to 50	4
51 to 100	1

Configuration

The 2 modes are set using **S3** DIP-switch 1 on the rear of the 6741W (/BM) unit

	KIT MODE	BUILDING MODE
S3 DIP 1	***ON***	***OFF***
	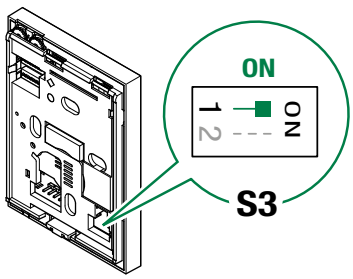	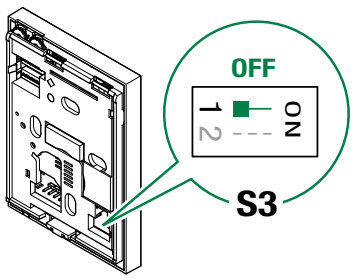

Main and secondary door entry monitors

A single 6741W (/BM) door entry monitor can be installed for each user code (apartment); this will also be the only main door entry monitor (P)

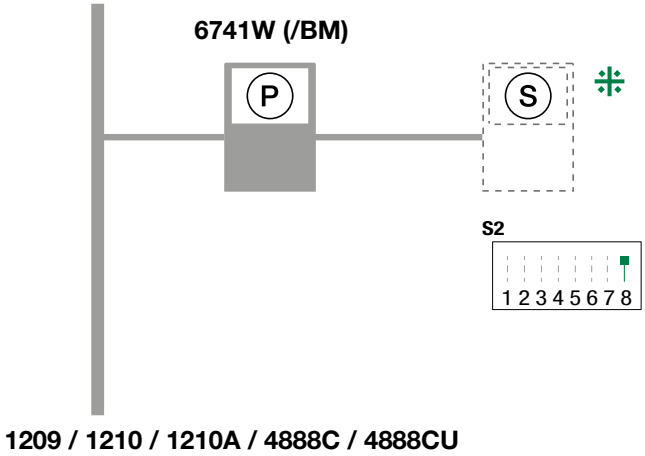

Compatible secondary door entry monitors: art. 6601W, 6601W/BM, 6701W, 6701W/BM, 6701W/8, 6721W, 6721W/BM, 6801W, 6801W/BM.

Power Management

For correct power supply management, set **DIP 7 (S2)** according to the table.
With art. 6741W with a revision index [RR] greater than or equal to 12 and with art. 6741W/BM with a revision index [RR] greater than or equal to 10: S2 DIP 7 should always be left set to ON (default), even in systems with 4888C and 4888CU.

		with mixer **Art. 4888C/4888CU**	with power supply unit **Art. 1210/1210A**	with power supply unit **Art. 1209**
6741W	**RR < 12**	ON 1 2 3 4 5 6 **7** 8 S2	ON 1 2 3 4 5 6 **7** 8 S2	
6741W/BM	**RR < 10**			
6741W	**RR >= 12**	ON 1 2 3 4 5 6 **7** 8 S2		
6741W/BM	**RR >= 1 0**			

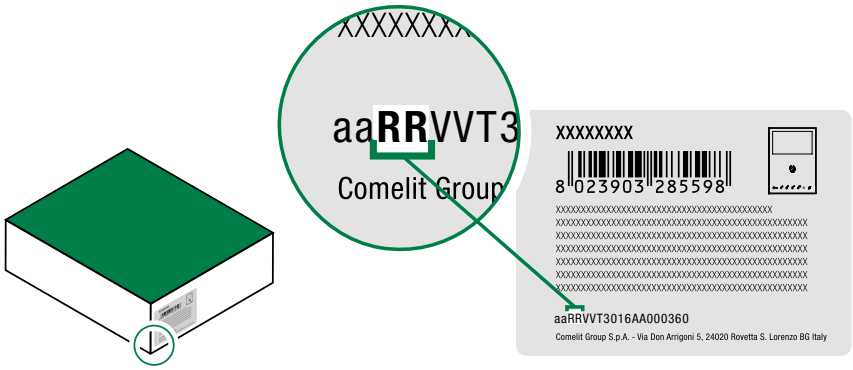

Surface mounting

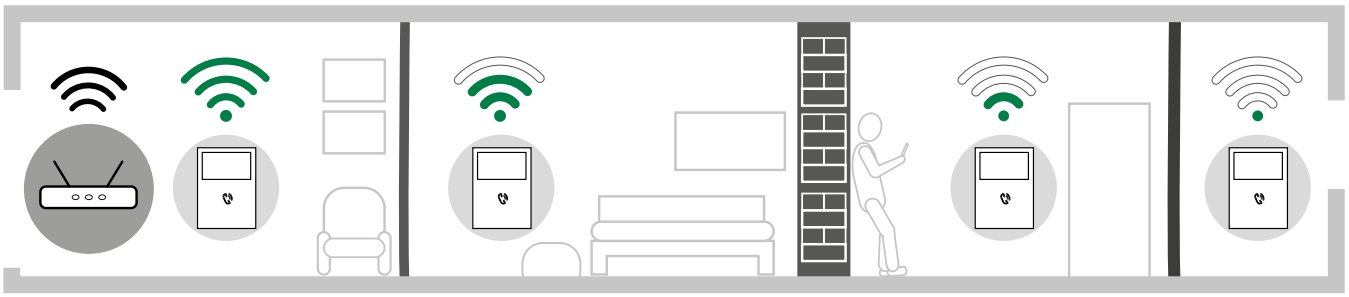

Before definitive installation of the door entry monitor, make sure the device has good Wi-Fi signal reception; the distance between the router and door entry monitor, and the construction materials used in the walls are factors that can affect signal quality.

If the Wi-Fi signal is not strong enough to guarantee correct operation, a Wi-Fi repeater must be installed between the router and door entry monitor in order to boost the Wi-Fi signal received by the door entry monitor.

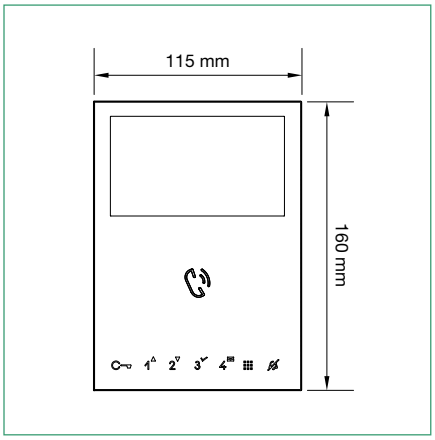

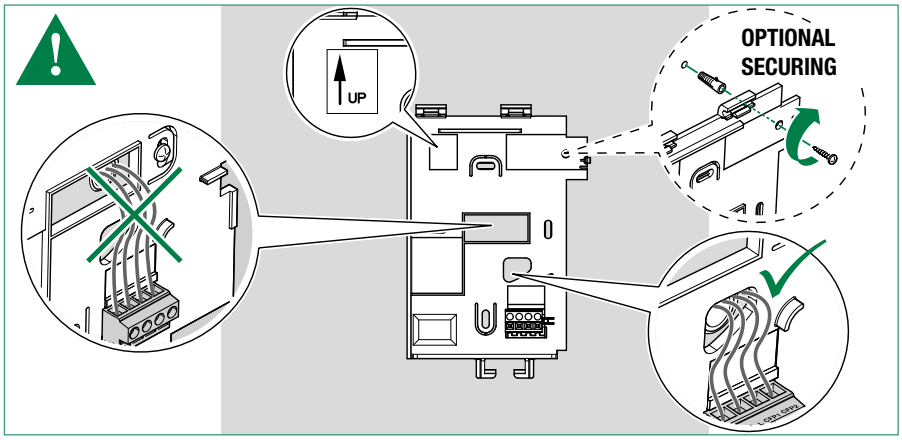

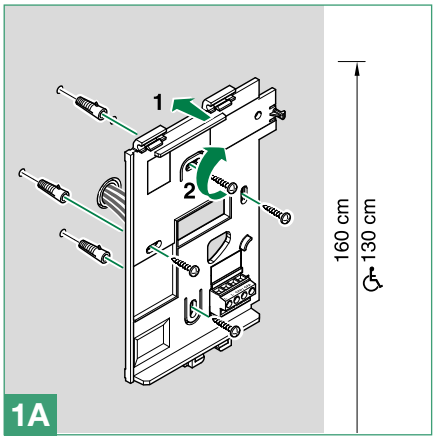

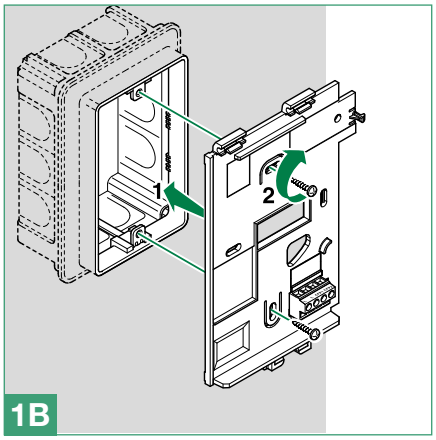

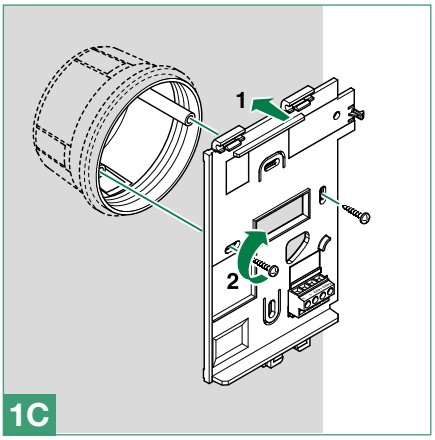

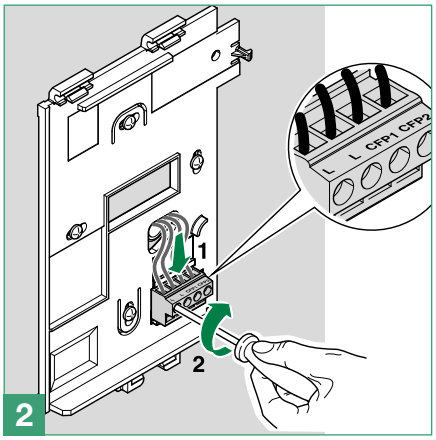

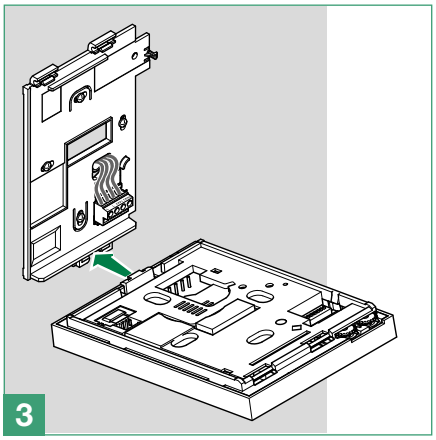

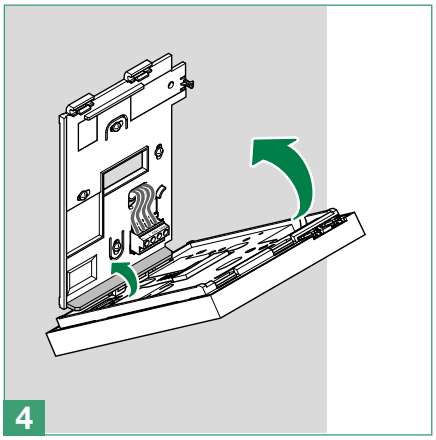

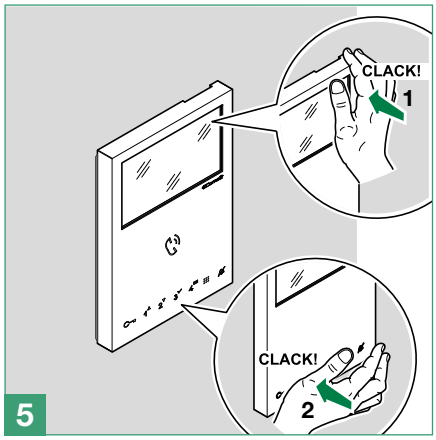

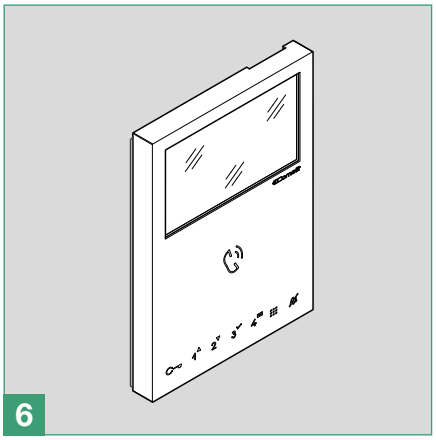

Removing the door entry monitor

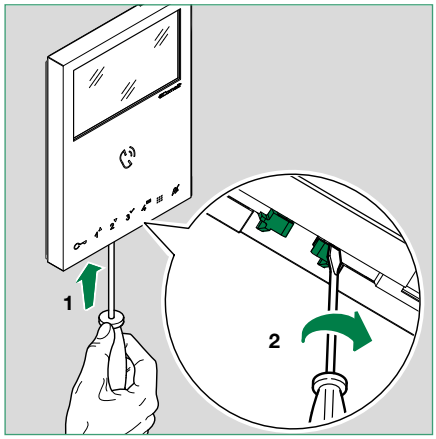

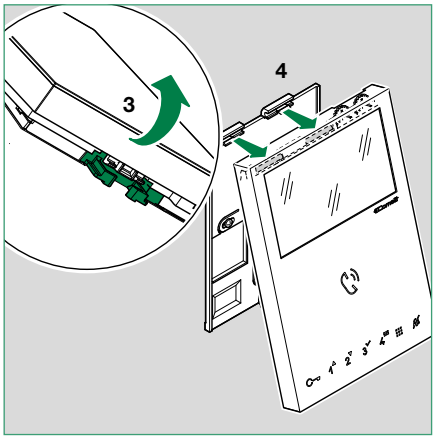

Removing / fitting the terminal

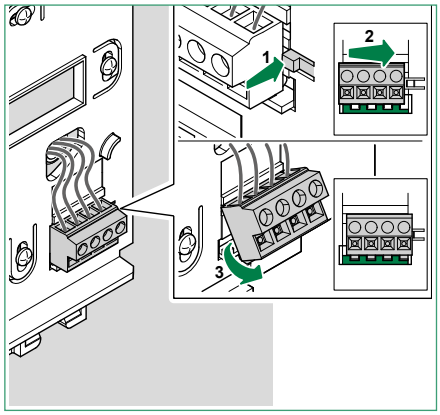

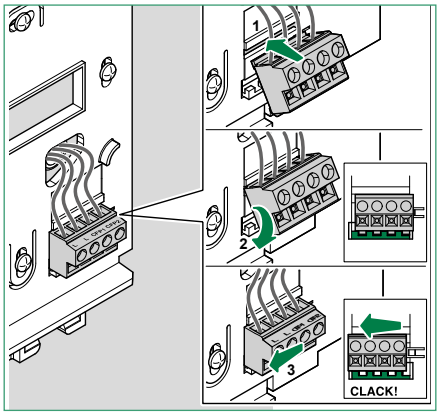

Connections

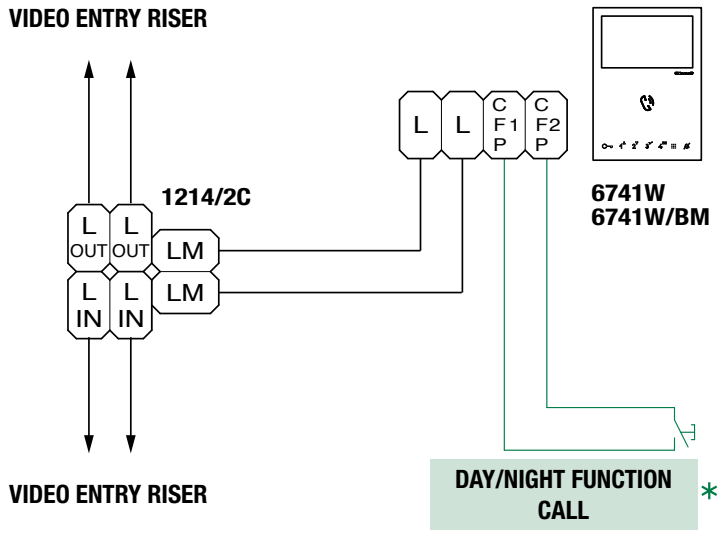

* **20 m MAX** - use a shielded cable for the connection and do not route the cables near heavy inductive loads or power cables (230V / 400V).

Where multiple door-entry phones or door entry monitors have the same user code, connect the CFP button on one only; all the devices will ring simultaneously.

Press and hold buttons

(disabled by default from firmware version 2.0.0)

Pressing and holding the buttons adds functions to the door entry monitor (see page 4).

Carry out the procedure described below to **enable** the press and hold feature:

1.	2.	3.	4.
Make a note of the S2 DIP-switch settings.	Set DIP 1,3,5 to ON. 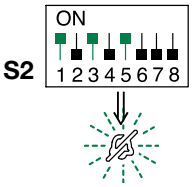	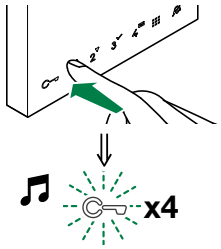	Restore the initial S2 DIP-switch combination.

Carry out the procedure described below to **disable** the press and hold feature, as per the factory settings:

1.	2.	3.	4.
Make a note of the S2 DIP-switch settings.	Set DIP 1,3,5 to ON. 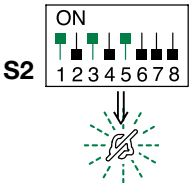	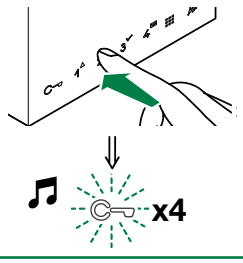	Restore the initial S2 DIP-switch combination.

Button configuration

By default the buttons are configured with the functions shown in the table:

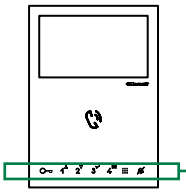

	1	2	3	4
AP	**ACT**	**AI**	**CCS**	**D**

Legend

AP	Lock-release	*Press and release key*
ACT	Actuator	
AI **	Self activation	
CAMG	Remote camera module with generic address	
CAM1	Remote camera module with address 220	
CAM2	Remote camera module with address 221	
CCP*	Call to main switchboard	
CCS*	Call to secondary switchboard	
K	Caretaker door-entry phone call	
PAN*	Panic	
INT	**General or selective intercom.** *Default: single-family call*	
INTb	**Two-family intercom call** - *for Kit only*	
NULL	No function	
D **	Door opening upon call (Doctor) mode	*Press and hold key*
PROG	Programmed functions, see **"Advanced configuration".** In this DIP-switch setting, the buttons control the programmed functions; the NON-programmed buttons control the functions referred to on line A (default).	

* Cannot be used in Kit systems

** Pressing and holding enables / disables the function, *see* **"Press and hold buttons" on page 11**

From firmware version 2.1.0 onwards, the door entry monitor button configuration can be changed in 2 different ways:
- using S2 DIP-switches 1-2-3-4
- via the door entry monitor menu

Configuration using the DIP-switches

It is possible to change the default configuration of the buttons by changing the positions of the S2 DIP-switches 1-2-3-4 on the rear of the door entry monitor to one of the combinations (B-P) suggested in the table below. All the buttons will change function.

Standard configurations

		S2 Dip-switches					Art. 6741W (/BM)				
		DIP 1	DIP 2	DIP 3	DIP 4			1	2	3	4
	A	**OFF**	**OFF**	**OFF**	**OFF**	▶	**AP**	**ACT**	**AI**	**CCS**	**D**
default	B	ON	OFF	OFF	OFF		AP	CCS	AI	INT	INTb
	C	OFF	ON	OFF	OFF		AP	INT	AI	INTb	ACT
	D	ON	ON	OFF	OFF		AP	ACT	CCS	CCP	PAN
	E	OFF	OFF	ON	OFF		ACT	ACT	ACT	ACT	ACT
	F	ON	OFF	ON	OFF		AP	INT	ACT	CCS	CCP
	G	OFF	ON	ON	OFF		AP	AI	D	K	CCS
	H	ON	ON	ON	OFF		AP	INTb	INT	AI	INT
	I	OFF	OFF	OFF	ON		AP	CCS	PAN	D	AI
	J	ON	OFF	OFF	ON		AP	K	CCS	PAN	CCP
	K	OFF	ON	OFF	ON		AP	CCP	K	PAN	ACT
	L	ON	ON	OFF	ON		AP	AI	CAMG	CAM1	CAM2
	M	OFF	OFF	ON	ON		AP	INTb	AI	INT	ACT
	N	ON	OFF	ON	ON		AP	INT	INT	INT	INT
	P	OFF	ON	ON	ON		NULL	NULL	NULL	NULL	NULL
		ON	ON	ON	ON		**PROG**				

Advanced configuration

If the standard configuration settings do not reflect requirements, the buttons can be programmed differently by carrying out the steps below.

After programming, set S2 DIP 1-2-3-4 (PROG) to ON. With these DIP settings, the buttons manage the programmed functions.

The buttons that are NOT programmed control the functions in row A (table **"Standard configurations"**).

Configuring intercom calls

Various types of intercom call can be configured:

- **Internal general intercom call**

  The door entry monitor calls ALL internal units in the same apartment, which have the same user code as the caller.

- **External general intercom call**

  The door entry monitor calls ALL the internal units in another apartment. The user code must be programmed for the internal units in the apartment to be called.

- **Selective single intercom call**

  This is an intercom call to an internal unit in the same apartment or another apartment identified by a dedicated intercom call code, different from the code identifying the apartment. It ONLY calls that internal unit. The call code that can be configured for the selective intercom function goes from 1 to 8; the same intercom call code can be assigned to a maximum of 3 internal units.

  If even a single user configures this function, the intercom call code must be programmed on all door entry monitors on the riser, even if they do not use the function!

- **Selective group intercom call**

  This is an intercom call to groups of several internal units in the same apartment or another apartment identified by a dedicated intercom call code, different from the code identifying the apartment. The internal unit button can be configured with up to 3 different intercom call codes to which the call will be made at once. The maximum number of internal units which can ring simultaneously nevertheless remains 3.

  General intercom and selective intercom CANNOT be programmed in the same system!

- **Two-family intercom (INTb)**

  When this function is configured, if user code 1 has been assigned to the internal unit making the call, this unit calls the internal units to which user code 2 has been assigned and vice-versa, if its code is 3 it calls 4 and vice-versa, etc.

General internal intercom call and general external intercom call: button configuration

The button for the General internal intercom call function can also be programmed using the procedure described in the section **"Configuration via the menu" on page 18**.

1. Make a note of the S1 DIP-switch settings.	
2. To enter programming mode, set S2 **DIP 6** to ON. » *the LED flashes*	**S2** ON 1 2 3 4 5 6 7 8 ⇒
3. Refer to the table **"Standard configurations"** to identify a DIP-switch 1-2-3-4 combination in which the intercom function (INT) corresponding to the button you want to program appears, then set the **S2** DIP-switches. Example: For button X= Intercom (INT) set S2 DIP-switches 1-2-3-4 as specified in row "N" in the table **"Standard configurations"**	Example **S2** ON 1 2 3 4 5 6 7 8
4. Set the **S1** DIP-switches according to the call address of the desired apartment. See **"Addressing table" on page 6**	

5. Press and release the button to be associated with the function. » *Correct procedure indication*: the LED flashes for a few seconds and a confirmation tone sounds.	
6. Exit programming mode by setting **S2 DIP 6** to OFF. » *LED switches off*	S2 ON 1 2 3 4 5 6 7 8
7. Set S2 **DIP-switches 1-2-3-4** to ON.	
8. Return the S1 DIP-switch settings to their original combination.	

Selective single or group intercom call: button configuration

First, the intercom call code needs to be set for each internal unit on the riser.

Proceed as follows:

1. Make a note of the S1, S2 settings and **restore them at the end of** the programming process.	
2. S1: Set an address. See Table B. Example: 3	S1 ON 1 2 3 4 5 6 7 8
3. S2: Set the DIP-switches as shown in the figure.	S2 ON 1 2 3 4 5 6 7 8 ⇒
4.	✓ OK prog: x4 ✗ KO prog: x10

Table B

Code	S1 DIP-switch ON
1	1
2	2
3	3
4	4
5	5
6	6
7	7
8	8

The same intercom call code can be associated with up to 3 devices.

Now proceed as follows:

2. Make a note of the S1 DIP-switch settings.	
3. To enter programming mode, set S2 **DIP 6** to ON. » *the LED flashes*	S2 ON 1 2 3 4 5 6 7 8 ⇒
4. Refer to the table **"Standard configurations"** to identify a DIP-switch 1-2-3-4 combination in which the intercom function (INT) corresponding to the button you want to program appears, then set the **S2** DIP-switches. Example: For button X= Intercom (INT) set S2 DIP-switches 1-2-3-4 as specified in row "N" in the table **"Standard configurations"**	Example S2 ON 1 2 3 4 5 6 7 8
5. Use the S1 DIP-switch to set the ***selective*** address of the device you wish to call. See Table B. For group calls, simultaneously set the desired selective addresses (max. 3) to ON.	
6. Press and release the button to be associated with the function. » *Correct procedure indication: the LED flashes for a few seconds and a confirmation tone sounds.*	
7. Exit programming mode by setting S2 DIP **6** to OFF. » *LED switches off*	S2 ON 1 2 3 4 5 6 7 8
8. Set S2 **DIP-switches 1-2-3-4** to ON.	

9.	Return the S1 DIP-switch settings to their original combination.

If you need to delete the intercom call code, proceed as follows:

1.	2.	3.
Take note of the S1, S2 settings and **restore them when programming** is complete.	Se the DIP-switches as shown in the figure. 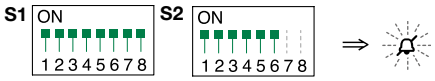	

Two-family intercom call: button configuration

The button for the Two-family intercom call function can also be programmed using the procedure described in the section **"Configuration via the menu" on page 18**.

1.	Take note of the S1 DIP-switch settings.
2.	To enter programming mode, set S2 DIP 6 to ON. 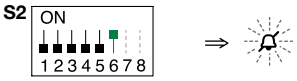 » *the LED flashes*
3.	Refer to the table **"Standard configurations"** to identify a DIP-switch 1-2-3-4 combination in which the intercom function (INTb) corresponding to the button you want to program appears, then set the **S2** DIP-switches. Example: For button 1= Two-family intercom (INTb), set S2 DIP-switches 1-2-3-4 as specified in row "H" in the table **"Standard configurations"**
4.	Press and release the button to be associated with the function. » *Correct procedure indication: the LED flashes for a few seconds and a confirmation tone sounds.*
5.	Exit programming mode by setting S2 DIP 6 to OFF. » *LED switches off*
6.	Set S2 **DIP-switches 1-2-3-4** to ON.
7.	Return the S1 DIP-switch settings to their original combination.

Configuring actuator control

The door entry monitor keys can be configured to activate one or more actuators within the system.

Generic actuator: button configuration

The button for the Generic actuator function can also be programmed using the procedure described in the section **"Configuration via the menu" on page 18**.

1.	Take note of the S1 DIP-switch settings.
2.	To enter programming mode, set S2 **DIP 6** to ON. 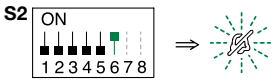 » *the LED flashes*
3.	Refer to the table **"Standard configurations"** to identify a DIP-switch 1-2-3-4 combination in which the actuator function (ACT) corresponding to the button you want to program appears, then set the **S2** DIP-switches. Example: For button X= Actuator (ACT), set S2 DIP-switches 1-2-3-4 as specified in row "E" in the table **"Standard configurations"** Example 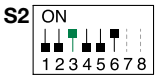
4.	Set all S1 DIP-switches to ON. 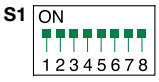
5.	Press and release the button to be associated with the function. » *Correct procedure indication: the LED flashes for a few seconds and a confirmation tone sounds.*

6. Exit programming mode by setting S2 DIP 6 to OFF. » *LED switches off*	S2 ON 1 2 3 4 5 6 7 8
7. Set S2 **DIP-switches 1-2-3-4** to ON.	
8. Return S1 DIP-switches to the original combination.	

Coded actuator: button configuration

1. Make a note of the S1 DIP-switch settings.	
2. To enter programming mode, set S2 DIP 6 to ON. » *the LED flashes*	S2 ON 1 2 3 4 5 6 7 8 ⇒
3. Refer to the table **"Standard configurations"** to identify a DIP-switch 1-2-3-4 combination in which the actuator function (ACT) corresponding to the button you want to program appears, then set the **S2** DIP-switches. Example: For button X= Actuator (ACT), set S2 DIP-switches 1-2-3-4 as specified in row "E" in the table **"Standard configurations"**	Example S2 ON 1 2 3 4 5 6 7 8
4. Set the S1 DIP-switches with the desired code, according to **"Addressing table" on page 6**	
5. Press and release the button to be associated with the function. » *Correct procedure indication: the LED flashes for a few seconds and a confirmation tone sounds*	
6. Exit programming mode by setting S2 DIP 6 to OFF. » *LED switches off*	S2 ON 1 2 3 4 5 6 7 8
7. Set **S2** DIP-switches 1-2-3-4 to ON.	
8. Return the S1 DIP-switch to its original combination.	

Other functions

Button configuration

1. To enter programming mode, set S2 DIP **6** to ON. » *the LED flashes*	S2 ON 1 2 3 4 5 6 7 8 ⇒
2. Refer to the table **"Standard configurations"** to identify a DIP-switch 1-2-3-4 combination in which the desired functions corresponding to the buttons you want to program appear, then set the **S2** DIP-switches. Example: For button 2= Self Activation (AI) and button 4= Actuator (ACT), set S2 DIP-switches 1-2-3-4 as specified in row M in the table **"Standard configurations"**.	
3. Press and release the buttons involved in the change. » *Correct procedure indication: the LED flashes for a few seconds and a confirmation tone sounds.*	
4. Exit programming mode by setting S2 DIP 6 to OFF. » *LED switches off*	S2 ON 1 2 3 4 5 6 7 8
5. Set S2 DIP-switches 1-2-3-4 to ON.	

Configuring the call range

The door entry monitor can be configured to receive direct calls originating from the outdoor entrance panel, to both your own user code and an interval of user codes.

Example: If the door entry monitor is configured with user code "1" and the range of user codes from 5 to 7 is also configured, when the function is enabled it will receive both direct calls to code "1" and direct calls to codes 5, 6 and 7.

Configuring the minimum range address

1.	2.	3.	4.
S1 ON 1 2 3 4 5 6 7 8 set a code in accordance with the "Addressing table" on page 6	S2 ON 1 2 3 4 5 6 7 8		S2 ON 1 2 3 4 5 6 7 8

Configuring the maximum range address

1.	2.	3.	4.
S1 ON 1 2 3 4 5 6 7 8 set a code in accordance with the "Addressing table" on page 6	S2 ON 1 2 3 4 5 6 7 8		S2 ON 1 2 3 4 5 6 7 8

Deleting the range

1.	2.	3.	4.
S1 ON 1 2 3 4 5 6 7 8	S2 ON 1 2 3 4 5 6 7 8	2 sec	S2 ON 1 2 3 4 5 6 7 8

Enabling the range

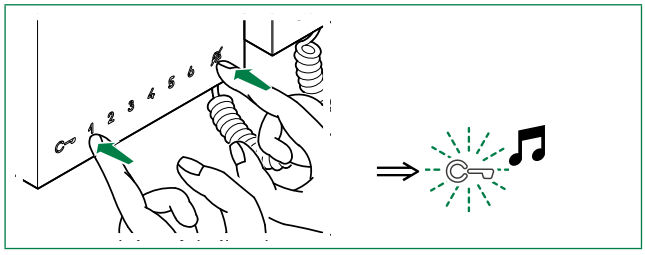

Disabling the range

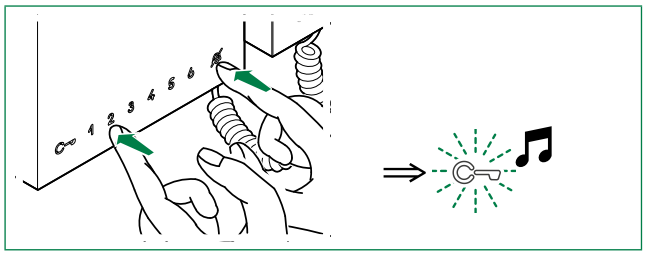

Configuration via the menu

Carry out the steps listed below:

1. Set S2 DIP-switches 1-2-3-4 on the rear of the door entry monitor to ON, as shown in the figure.

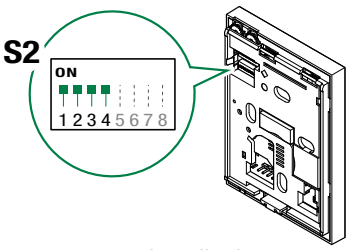

2. From the door entry monitor display:
   - Press the menu button, select Setup and confirm
   - Select the option *Button configuration*
   - Select the button to be associated with the function
   - Select the function to be associated with the button. All functions which do not require a Simplebus code to be assigned are available. Some examples of available functions are: self activation, generic actuator, general internal intercom, call to main switchboard, call to secondary switchboard, etc.

WiFree device operation

- ***Art. 6741W (/BM) must be connected to the internet in order to use this function!***
- ***Art. 6741W (/BM) must be paired with the Comelit app with version 5.6.0 or higher!***

Carry out the steps listed below:

1. Set the door entry monitor to Kit mode by moving S3 DIP-switch 1 on the rear of the door entry monitor to ON, as shown in the figure.

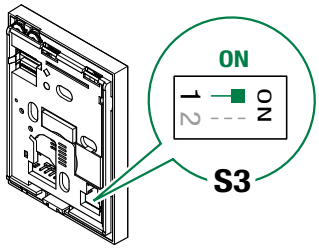

2. Set S2 DIP-switches 1-2-3-4 on the rear of the door entry monitor to ON, as shown in the figure.

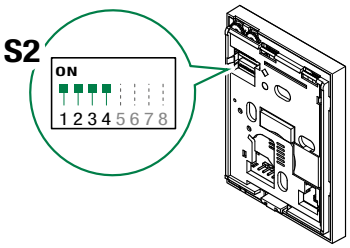

3. From the door entry monitor display:
   - Press the menu button, select Setup and confirm
   - Select the option *Button configuration*
   - Select the button to be associated with the function
   - Configure the button by selecting “Link 1”, “Link 2”, “Link 3” or “Link 4”.

4. Create the desired “Direct Link” commands on the Supla portal and **copy them**.

More info is available in section **“Create the commands to be associated with the buttons” on page 19**

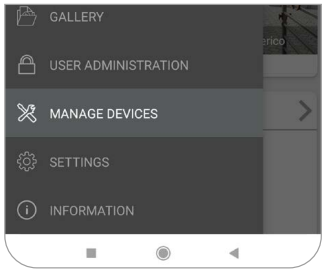

5. From the main menu in the COMELIT app, select:

MANAGE DEVICES

↳ DOOR ENTRY MONITORS

↳ **Program buttons**

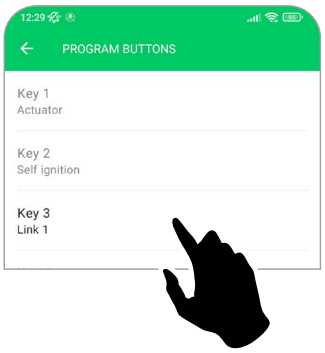

6. Select the key to configure. Only keys associated with the “Link” function can be configured.

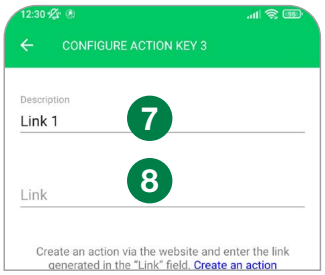

7. Enter the name to be associated with the command (this name will be shown in the “Program buttons” menu on the 6741W unit).
8. Paste the URL link created beforehand.

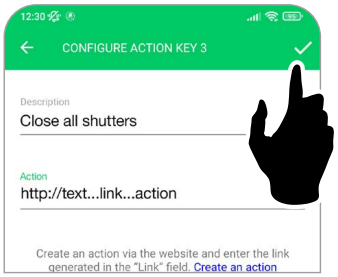

9. Confirm the changes.

Create the commands to be associated with the buttons

Once the WiFree modules have been installed and configured via the Comelit WiFree app, in order to be able to control the devices using the enabled buttons you will need to create a *"direct link"* for each command to be associated. Different *"direct links"* can be created for each WiFree device in the system, based on the type of command you want to implement.

Access the Supla portal via the Comelit WiFree app

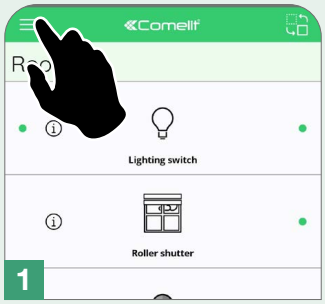

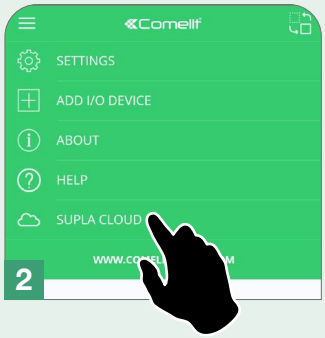

Log in using the information created for the Comelit WiFree app

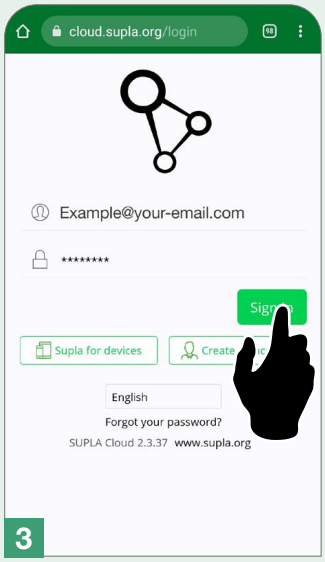

Access the ***"Direct links"*** section

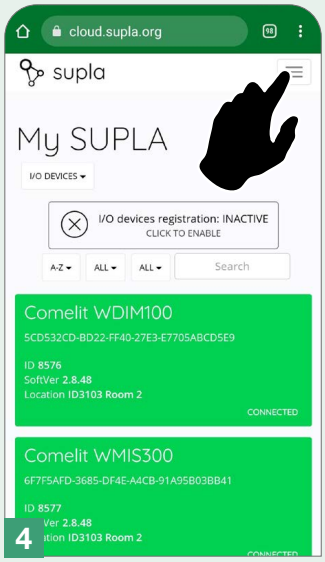

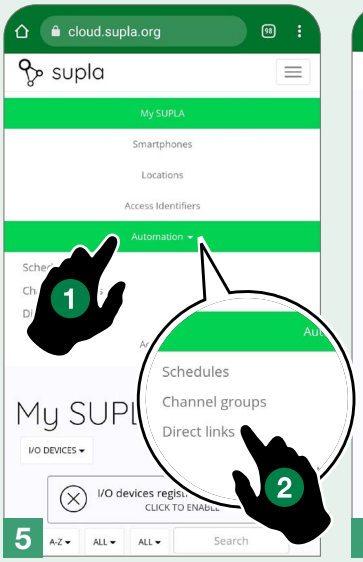

Create a new link

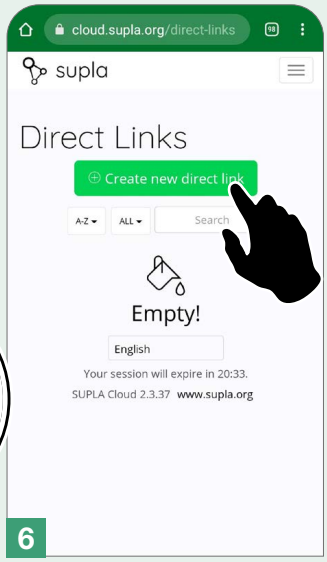

Select the element for which you wish to generate the link

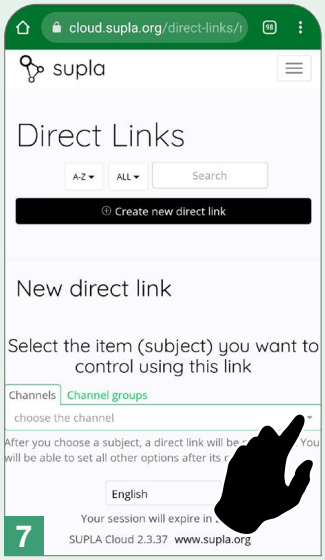

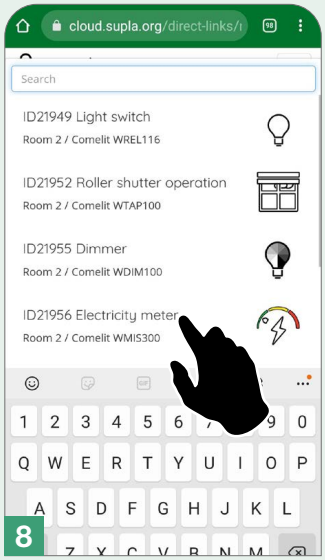

Select the action to carry out *(for example, "enable")*

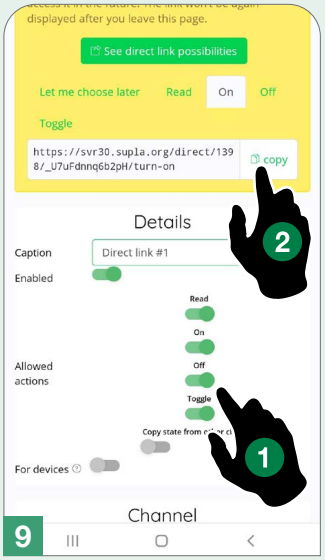

Copy and save the link

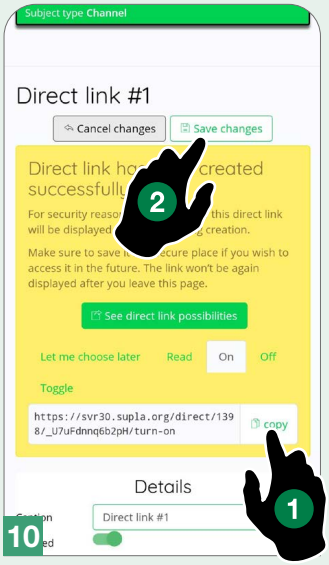

Operating third-party devices with functions that can be activated via URL

This mode can also be used to operate third-party devices with functions that can be activated via URL. This means it is possible to control devices with different protocols. This function therefore makes it possible to integrate any home automation system, even from third parties, to control gates or an external light, to activate a scenario, etc.

- ***Art. 6741W (/BM) must be connected to the internet in order to use this function!***
- ***Art. 6741W (/BM) must be paired with the Comelit app with version 5.6.0 or higher!***

Carry out the steps listed below:

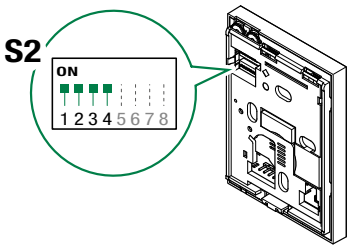

1. Set S2 DIP-switches 1-2-3-4 on the rear of the door entry monitor to ON, as shown in the figure.

2. From the door entry monitor display:
   - Press the menu button, select Setup and confirm
   - Select the option *Button configuration*
   - Select the key to be associated with the function
   - Configure the button by selecting “Link 1”, “Link 2”, “Link 3” or “Link 4”.

3. The desired URL commands must be created on the device supplier website and copied.

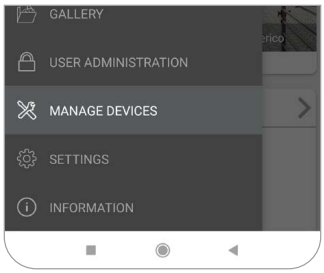

4. From the main menu in the COMELIT app, select:

MANAGE DEVICES
↳ DOOR ENTRY MONITORS
↳ **Program buttons**

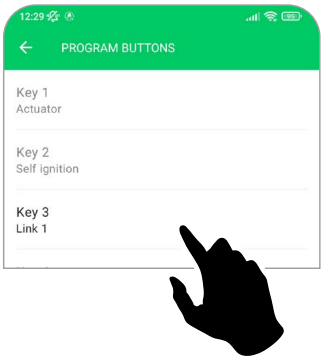

5. Select the key to configure.
   Only keys associated with the “Link” function can be configured.

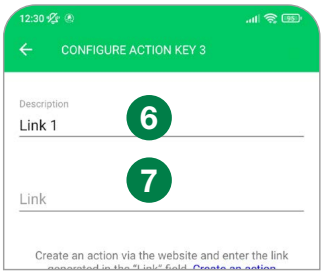

6. Enter the name to be associated with the command (this will be shown on the key associated with the Link)

7. Paste the URL link created beforehand.

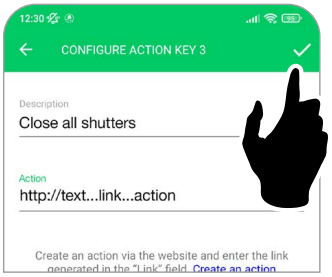

8. Confirm the changes.

Changing the ringtone

1. Press and hold for 6 sec.
   - » a confirmation tone is emitted
   - » the LED flashes

   The procedure is only possible while the system is in standby; otherwise the LED will flash 4 times to inform the user that the system is busy.

2. Press and release

   once (1 confirmation tone is emitted) to change the ringtone for calls from the external entrance panel.
   twice (2 confirmation tones sound) to change the ringtone for calls from the switchboard.
   3 times (3 confirmation tones are emitted) to change the ringtone for intercom calls made from the door entry monitor.
   4 times (4 confirmation tones sound) to change the floor door call ringtone.

   Any further pressing of the button repeats the sequence described above.

3. Press and release 1 to scroll through the available ringtones in sequence.
4. Press 2 to confirm selection of the last ringtone heard and to exit change ringtone mode.
   - » a confirmation tone is emitted
   - » LED switches off
5. Repeat steps 1 to 4 to change the other ringtones.

Programming reset

Factory settings:

- Button functions for the S2 DIP-switches 1-2-3-4 combination
- Intercom address absent
- Range function and min./max. addresses absent
- Ringtone reset
- “Automatic door opening on receipt of call” and “Silent” mode disabled

1.	2.	3.	
Take note of the S1, S2 settings and **restore them when programming** is complete.	Set the DIP-switches as shown in the figure. 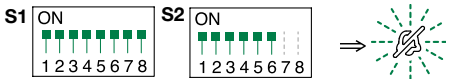	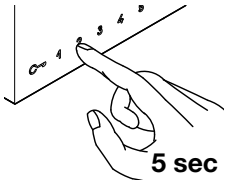	OK prog: x4 KO prog: x10

System performance and layouts

Diagrams for systems with art. 8451V or 8451V/BM

Maximum no. of 6741W (/BM) units per apartment with the same user code	1
Call repetition devices that can be used	1229A
Maximum no. of internal units (including call repetition devices) with the same user code	4
Maximum no. of internal units that can be powered by art. 1209 (up to 4 art. 6741W (/BM))	16

Operating distances

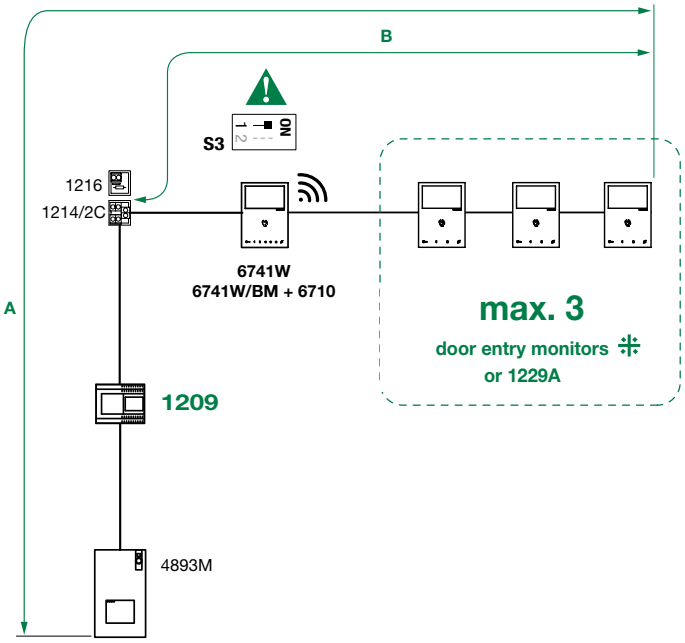

Compatible secondary door entry monitors: art. 6601W, 6601W/BM, 6701W, 6701W/BM, 6701W/8, 6721W, 6721W/BM, 6801W, 6801W/BM.

	A *max.*	**B** *max.*
Comelit Art. 4577/4579 1 mm2 (Ø 1.2 mm AWG 17)	200 m (655 feet)	100 m (330 feet)
UTP5 cat. 5 0.2 mm2 (Ø 0.5 mm AWG 24)	100 m (330 feet)	60 m (195 feet)
0.28 mm2 (Ø 0.6 mm AWG 23)	100 m (330 feet)	60 m (195 feet)
0.5 mm2 (Ø 0.8 mm AWG 20)	100 m (330 feet)	60 m (195 feet)
1 mm2 (Ø 1.2 mm AWG 17)	100 m (330 feet)	60 m (195 feet)
1 mm2 (Ø 1.2 mm AWG 17)	80 m (260 feet)	40 m (130 feet)
1.5 mm2 (Ø 1.4 mm AWG 15)	100 m (330 feet)	60 m (195 feet)
UTP5 cat. 5 0.2 mm2 (Ø 0.5 mm AWG 24) MULTI PAIR CABLE	200 m (655 feet)	70 m (230 feet)

UTP cable with multi-cable connection: FOLLOW THE COLOURS SHOWN IN THE DIAGRAM!

Single-family system

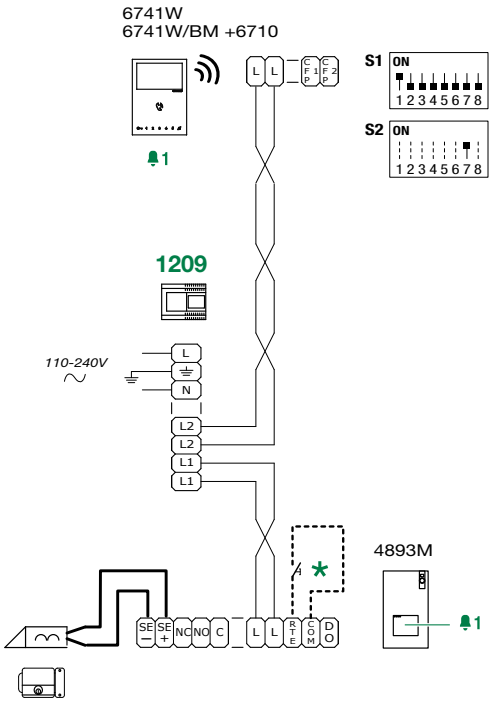

* Local door-opener button.

Two-family system

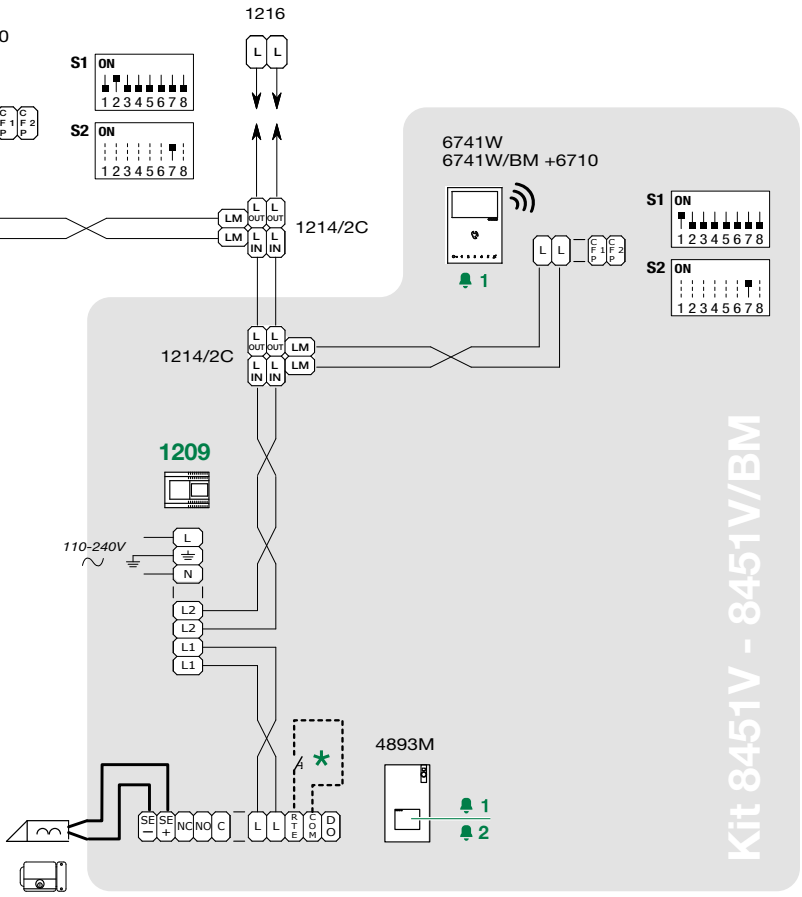

* Local door-opener button.

Four-family system

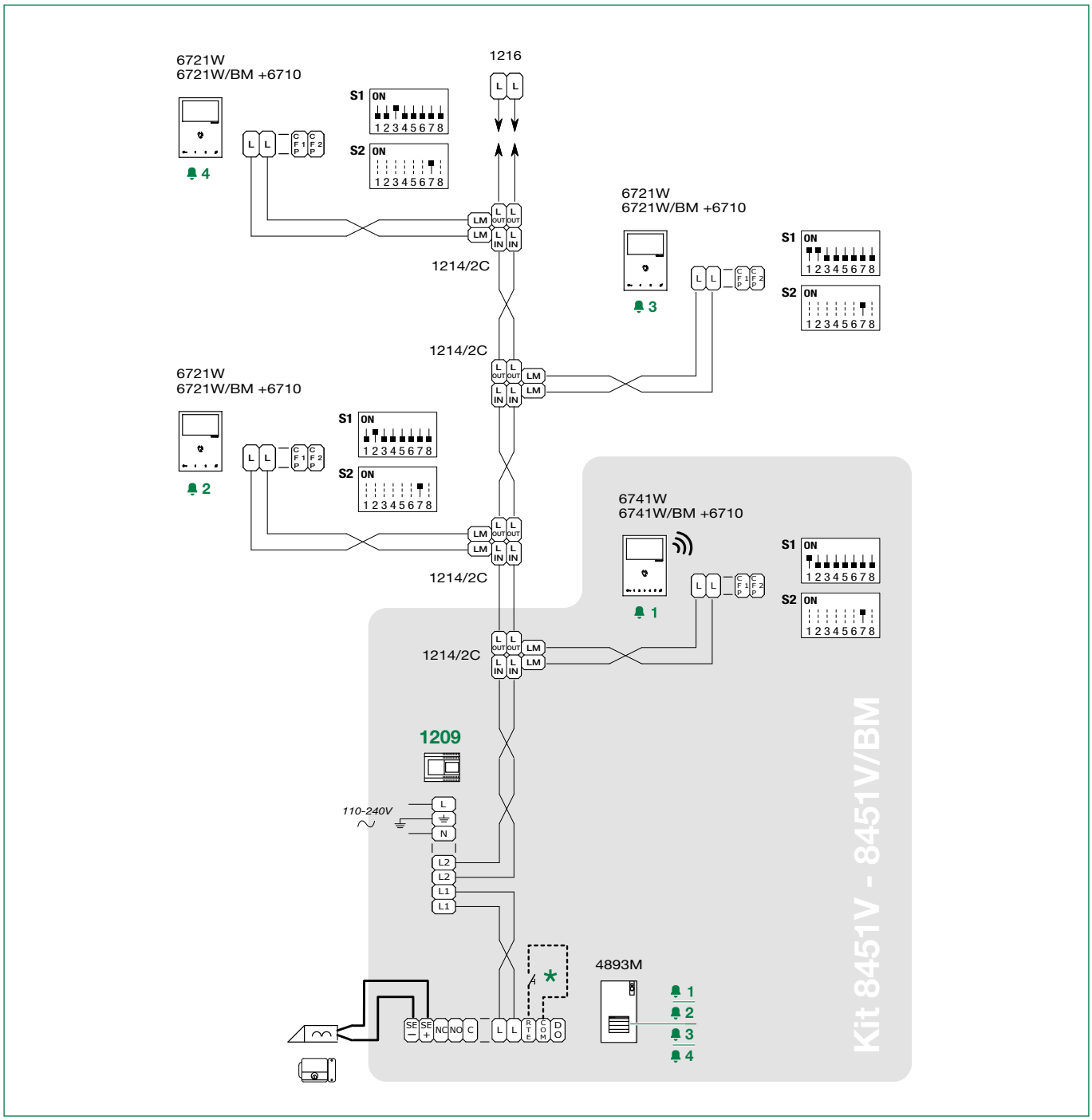

* Local door-opener button.

Single-family system with 2 external entrance panels and switching device art. 1404

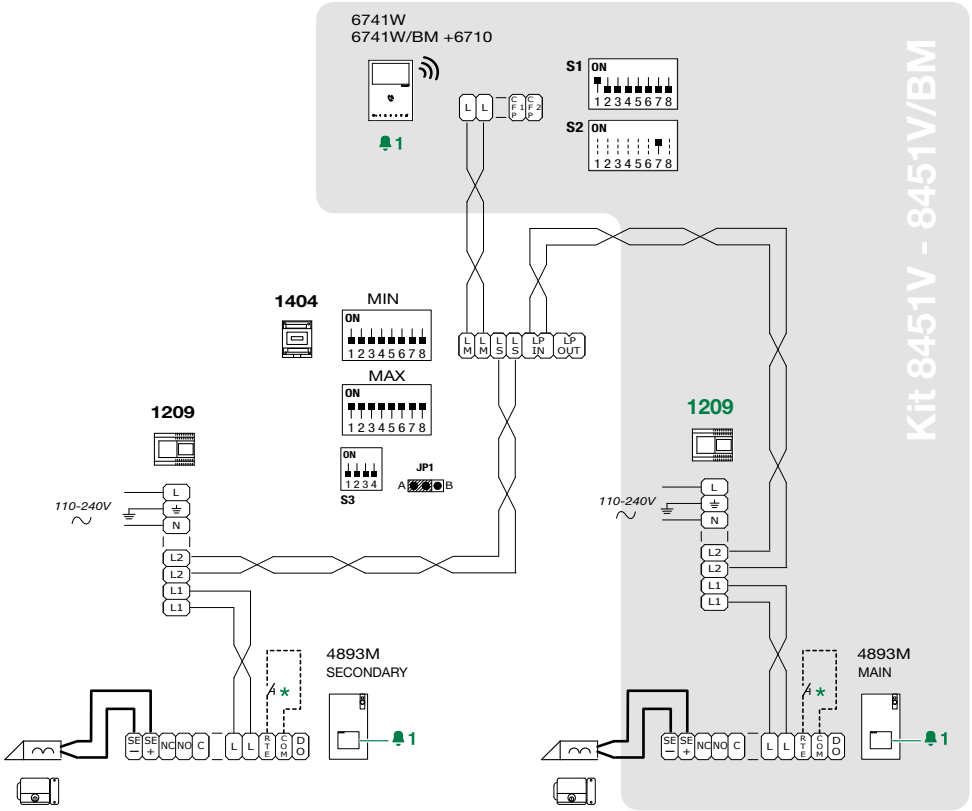

* Local door-opener button.

Single-family system with 2 external entrance panels and switching device art. 1405

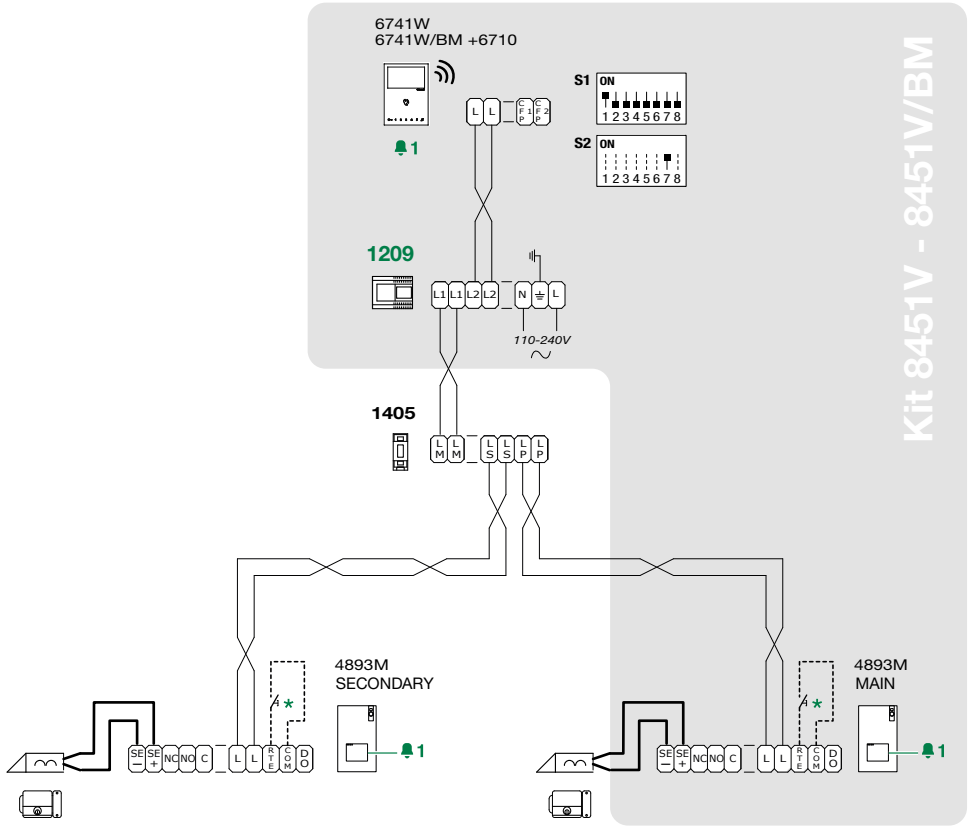

* Local door-opener button.

Single-family system with 3 external entrance panels

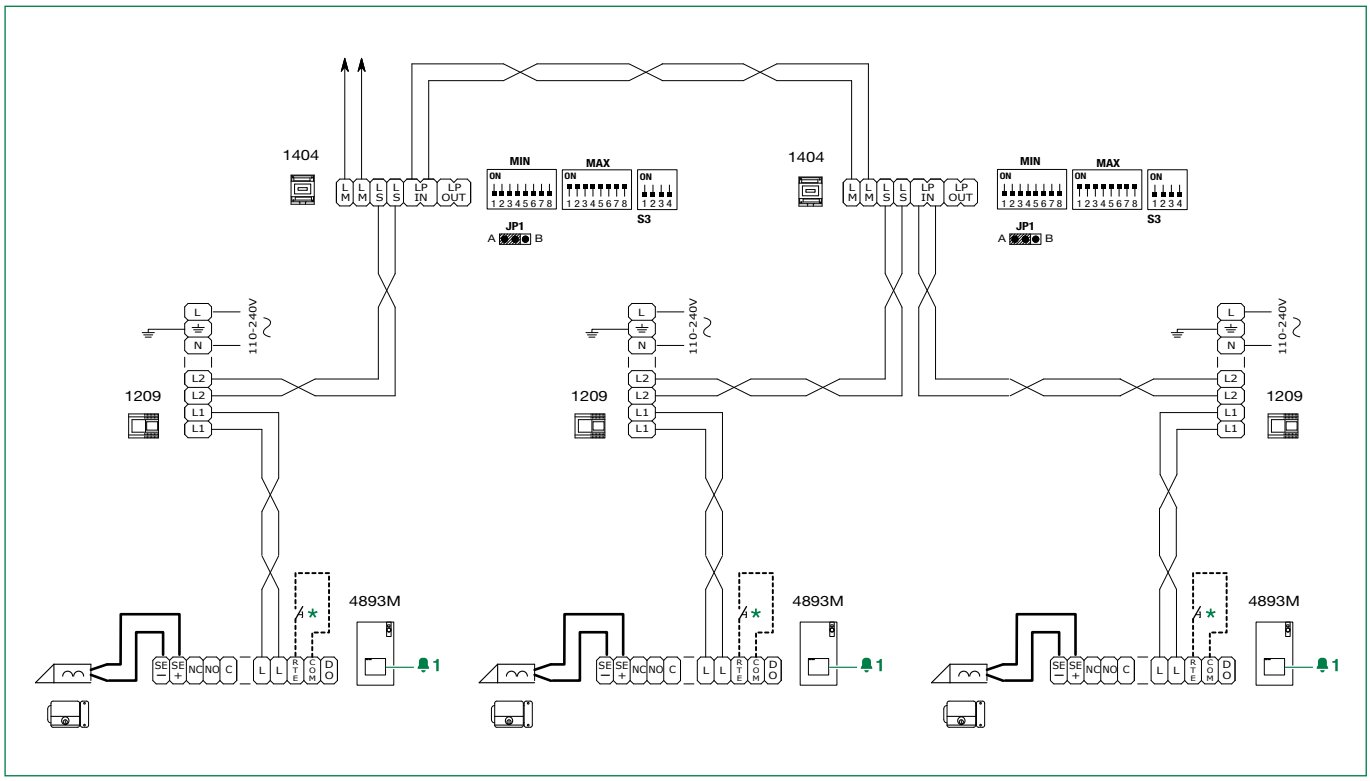

* Local door-opener button.

Diagrams for systems with power supply unit art. 1210 or 1210A

Maximum no. of 6741W (/BM) units per apartment with the same user code	1
Call repetition devices that can be used	Art. 1229A
Maximum no. of internal units (including call repetition devices) with the same user code and 6741W (/BM) units in Kit mode	2 *(Fig. 1)*
Maximum no. of internal units (including call repetition devices) with the same user code and 6741W (/BM) units in Building mode	4 *(Fig. 2)*
Maximum no. of internal units that can be powered by 1210/1210A (all in Building mode)	100

Maximum no. of 6741W (/BM) units in Kit mode	Maximum no. of internal units in the system (including 6741W (/BM) units in Kit mode)
10	20

Operating distances

Fig. 1 KIT MODE

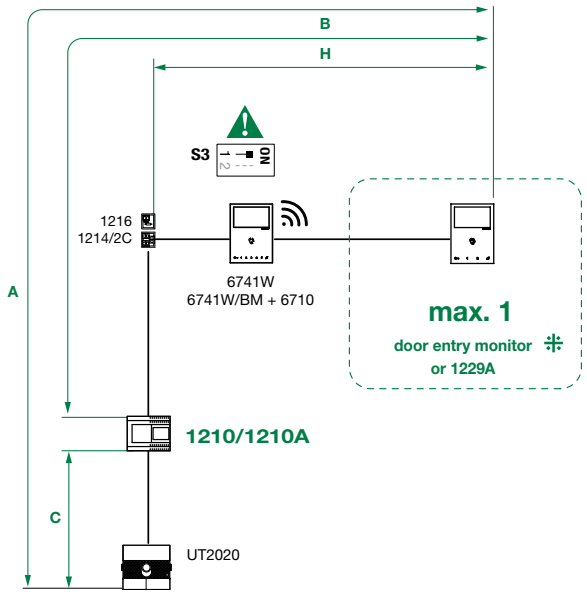

Fig. 2 BUILDING MODE

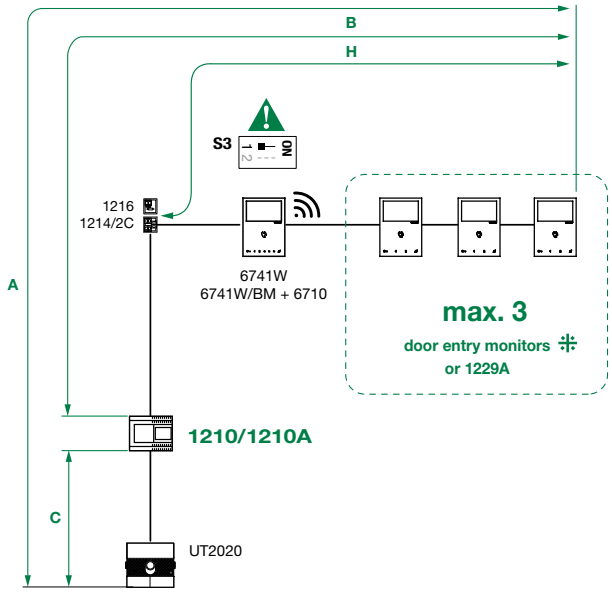

Compatible secondary door entry monitors: 6601W, 6601W/BM, 6701W, 6701W/BM, 6701W/8, 6721W, 6721W/BM, 6801W, 6801W/BM.

	A *max.*	B *max.*	C *max.*	H *max.*
Comelit Art. 4577/4579 1 mm2 (Ø 1.2 mm AWG 17)	260 (850 feet)	130 (425 feet)	130 (425 feet)	50 (164 feet)
UTP5 cat. 5 0.2 mm2 (Ø 0.5 mm AWG 24)	80 (260 feet)	40 (130 feet)	40 (130 feet)	30 (98 feet)
0.28 mm2 (Ø 0.6 mm AWG 23)	100 (328 feet)	50 (164 feet)	50 (164 feet)	30 (98 feet)
0.5 mm2 (Ø 0.8 mm AWG 20)	140 (460 feet)	70 (230 feet)	70 (230 feet)	30 (98 feet)
1 mm2 (Ø 1.2 mm AWG 17)	200 (656 feet)	100 (328 feet)	100 (328 feet)	40 (130 feet)
1.5 mm2 (Ø 1.4 mm AWG 15)	80 (260 feet)	40 (130 feet)	40 (130 feet)	30 (98 feet)
UTP5 cat. 5 0.2 mm2 (Ø 0.5 mm AWG 24) MULTI PAIR CABLE	260 (850 feet)	130 (425 feet)	130 (425 feet)	50 (164 feet)

UTP cable with multi-cable connection: FOLLOW THE COLOURS SHOWN IN THE DIAGRAM!

System with 1 external entrance panel

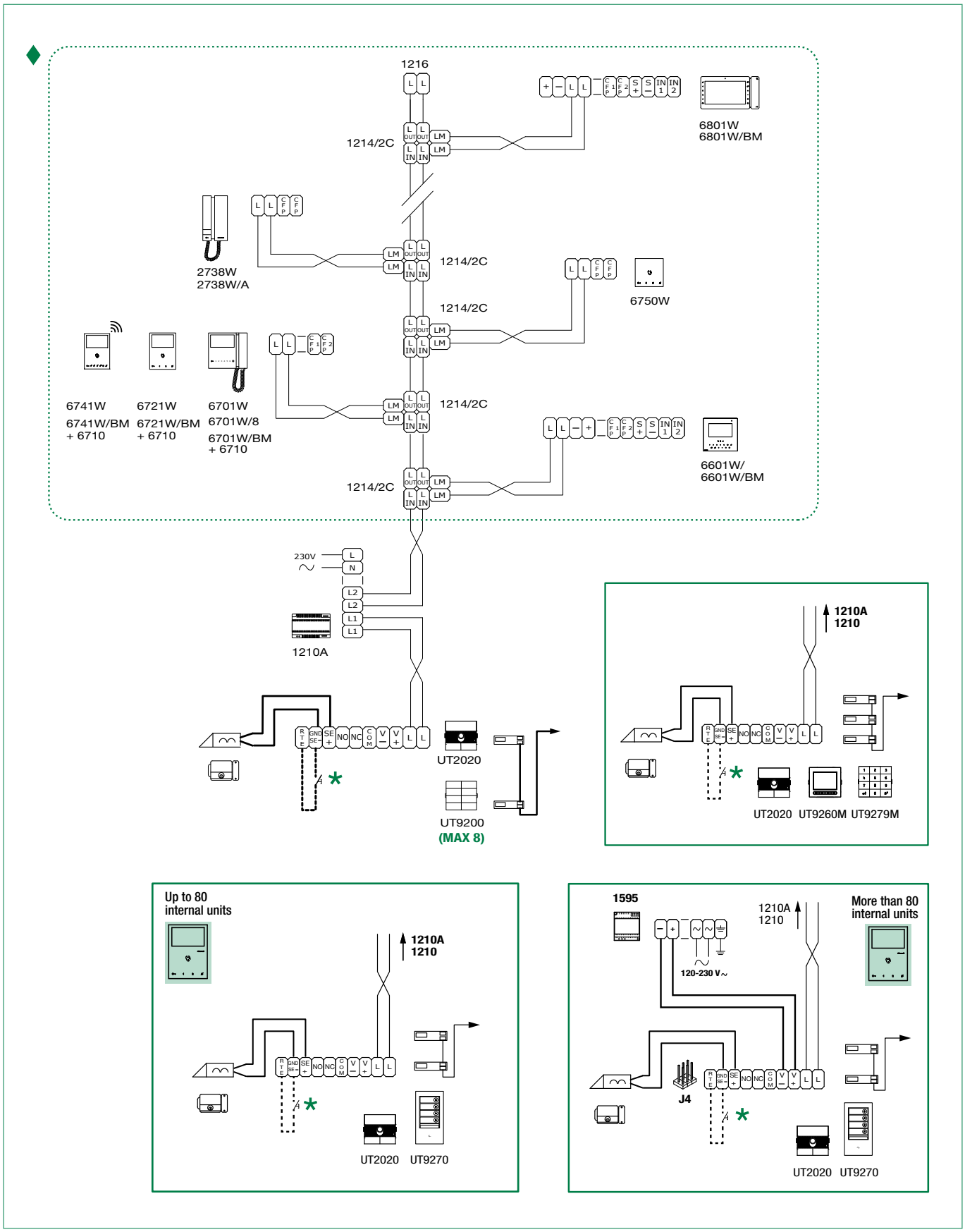

◆ Video entry riser.

* Local door-opener button. ***(20 m max.)***

System with 2 external entrance panels

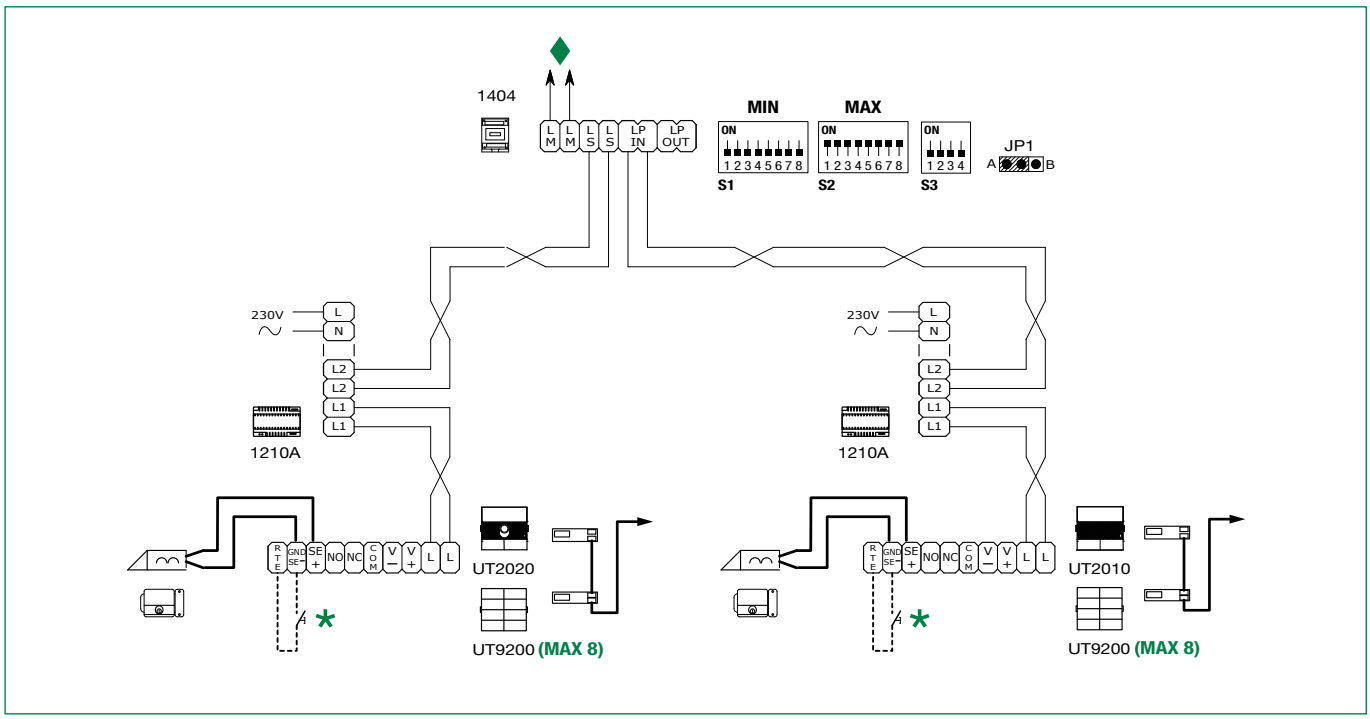

♦Video entry riser.

✱ Local door-opener button. ***(20 m max.)***

System with 1 main entrance panel and n secondary panels

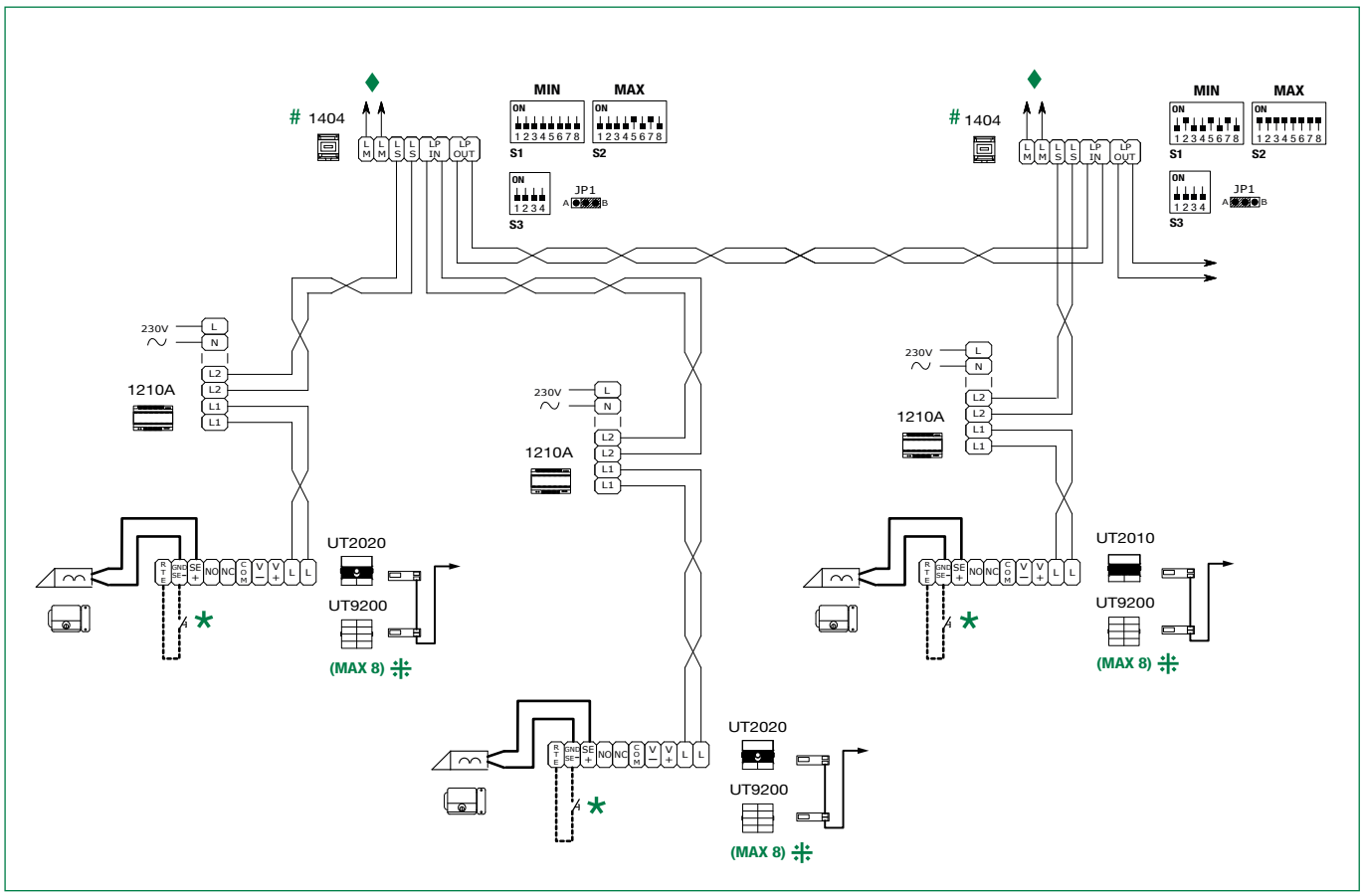

♦ Video entry riser.

✱ Local door-opener button. ***(20 m max.)***

CAUTION! Separate switching devices must manage code ranges which are not overlapping.

⁜ For configurations other than those indicated on the screen, please refer to the full manual for product UT2020/UT2010.

System diagrams with power supply unit art. 4888C / 4888CU

Installation rules

- *In systems powered by 4888C / 4888CU with a revision index greater than or equal to 053 (014), up to 100 door entry monitors can be installed.*
- *In systems powered by 4888C with a revision index between 021 and 052, up to 50 door entry monitors can be installed.*
- *Power supply units 4888C (4888CU) with a revision index prior to 021 (014) are not compatible for use with 6741W (/BM), and should therefore be replaced.*

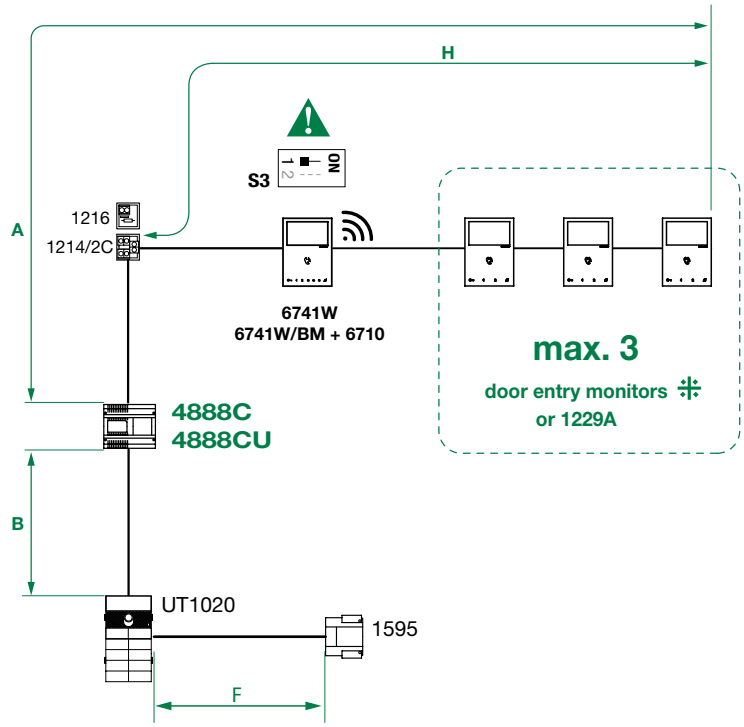

Compatible secondary door entry monitors: art. 6601W, 6601W/BM, 6701W, 6701W/BM, 6701W/8, 6721W, 6721W/BM, 6801W, 6801W/BM.

	A *max.*	B *max.*	F *max.*	H *max.*
Comelit Art. 4577/4579 1 mm2 (Ø 1.2 mm AWG 17)	200 m (655 feet)	200 m (655 feet)	50 m (165 feet)	100 m (330 feet)
UTP5 cat. 5 0.2 mm2 (Ø 0.5 mm AWG 24)	80 m (260 feet)	150 m (490 feet)		60 m (195 feet)
0.28 mm2 (Ø 0.6 mm AWG 23)	100 m (330 feet)	150 m (490 feet)	5 m (15 feet)	60 m (195 feet)
0.5 mm2 (Ø 0.8 mm AWG 20)	120 m (395 feet)	100 m (330 feet)	25 m (85 feet)	60 m (195 feet)
1 mm2 (Ø 1.2 mm AWG 17)	120 m (395 feet)	150 m (490 feet)	50 m (165 feet)	60 m (195 feet)
1 mm2 (Ø 1.2 mm AWG 17)	120 m (395 feet)	80 m (260 feet)	50 m (165 feet)	40 m (130 feet)
1.5 mm2 (Ø 1.4 mm AWG 15)	150 m (490 feet)	100 m (330 feet)	75 m (245 feet)	60 m (195 feet)
2.5 mm2 (Ø 1.8 mm AWG 13)	150 m (490 feet)	100 m (330 feet)	100 m (330 feet)	60 m (195 feet)

Maximum system expansion

Devices	6701W(/BM) 6701W/8	6721W(/BM)	6601W(/BM)	6801W(/BM)	6741W(/BM)
Maximum no. of door entry monitors that can be powered by art. 4888C	**100**	**100**	**100**	**100**	**100** (4888C with IR ≥053) **50** (4888C with IR ≥021 ≤052)
Call repetition devices that can be used	**1229A**	**1229A**	**1229A** **1229 #**	**1229A** **1229 #**	**1229A**

For installation information and limits, consult the relative manual

Maximum expansion per apartment

Devices	6701W(/BM) 6701W/8	6721W(/BM)	6601W(/BM)	6801W(/BM)	6741W(/BM)
Maximum no. of internal units *(including call repetition devices)* **with the same user code**	**4**	**4**	**3**	**4**	**1 ∗**
Maximum no. of main door entry monitors that can be powered via riser	**2**	**2**	**2**	**2**	**1**
Maximum no. of main door entry monitors that can be powered by art. 1212/B	**/**	**/**	**1**	**2**	**/**

∗ A **single 6741W (/BM) door entry monitor** can be installed for each user code; this will also be the only main door entry monitor. Up to 3 secondary door entry monitors can also be added art. 6601W, 6601W/BM, 6701W, 6701W/BM, 6701W/8, 6721W, 6721W/BM, 6801W, 6801W/BM.

With power supply unit art. 4888C with revision index greater than or equal to 053:

Maximum no. of internal units in the system *(including 6741W (/BM) units in Kit mode)*	**Maximum no. of 6741W (/BM) units in Kit mode**
30	6
31 to 50	4
51 to 100	1

System with 1 external entrance panel

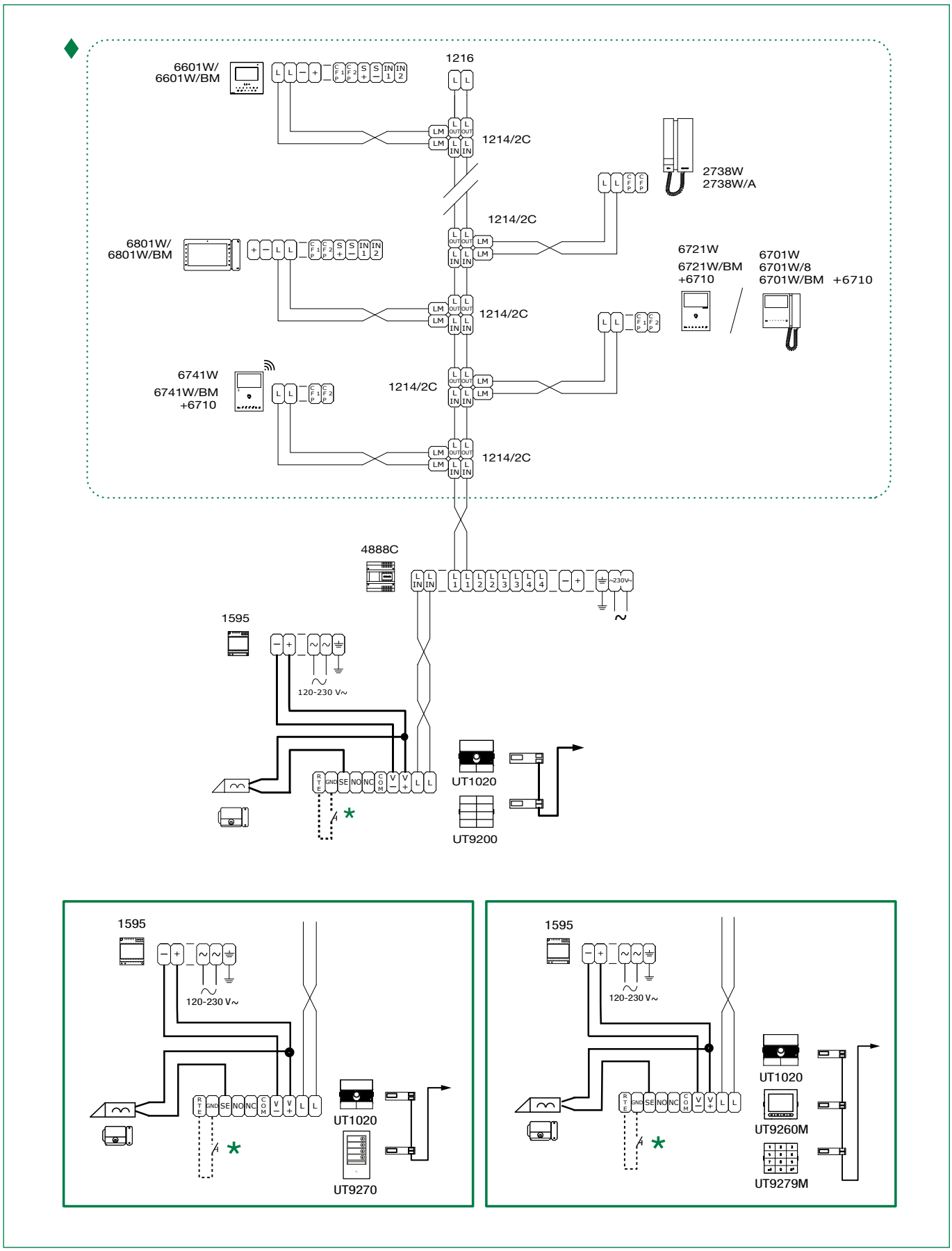

♦ Video entry riser.

* Local door-opener button. ***(20 m max.)***

System with 2 external entrance panels

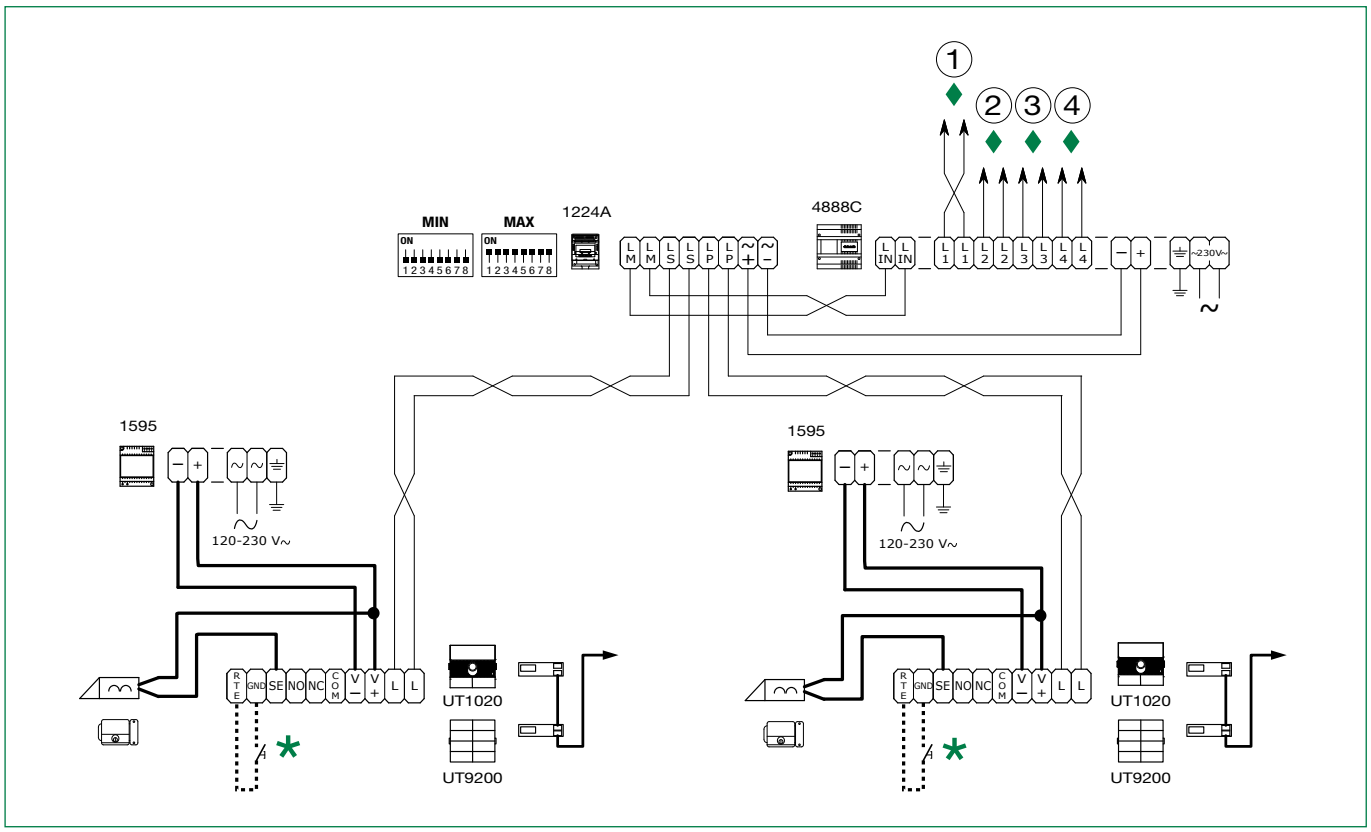

♦ Video entry riser.

✱ Local door-opener button. ***(20 m max.)***

Variant for porter switchboard connection

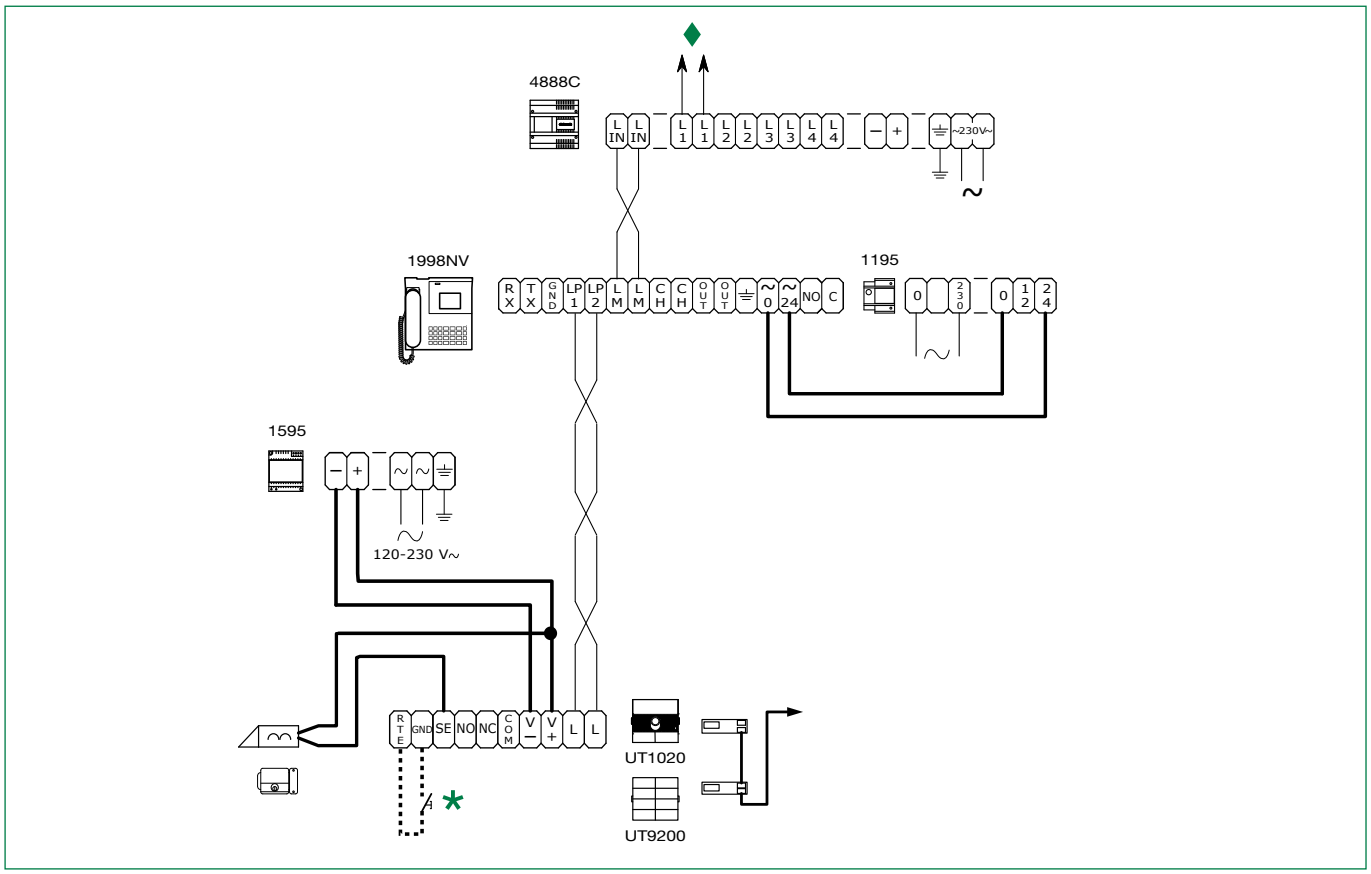

♦ Video entry riser.

✱ Local door-opener button. ***(20 m max.)***

System with 1 main entrance panel and n secondary panels (max. 9)

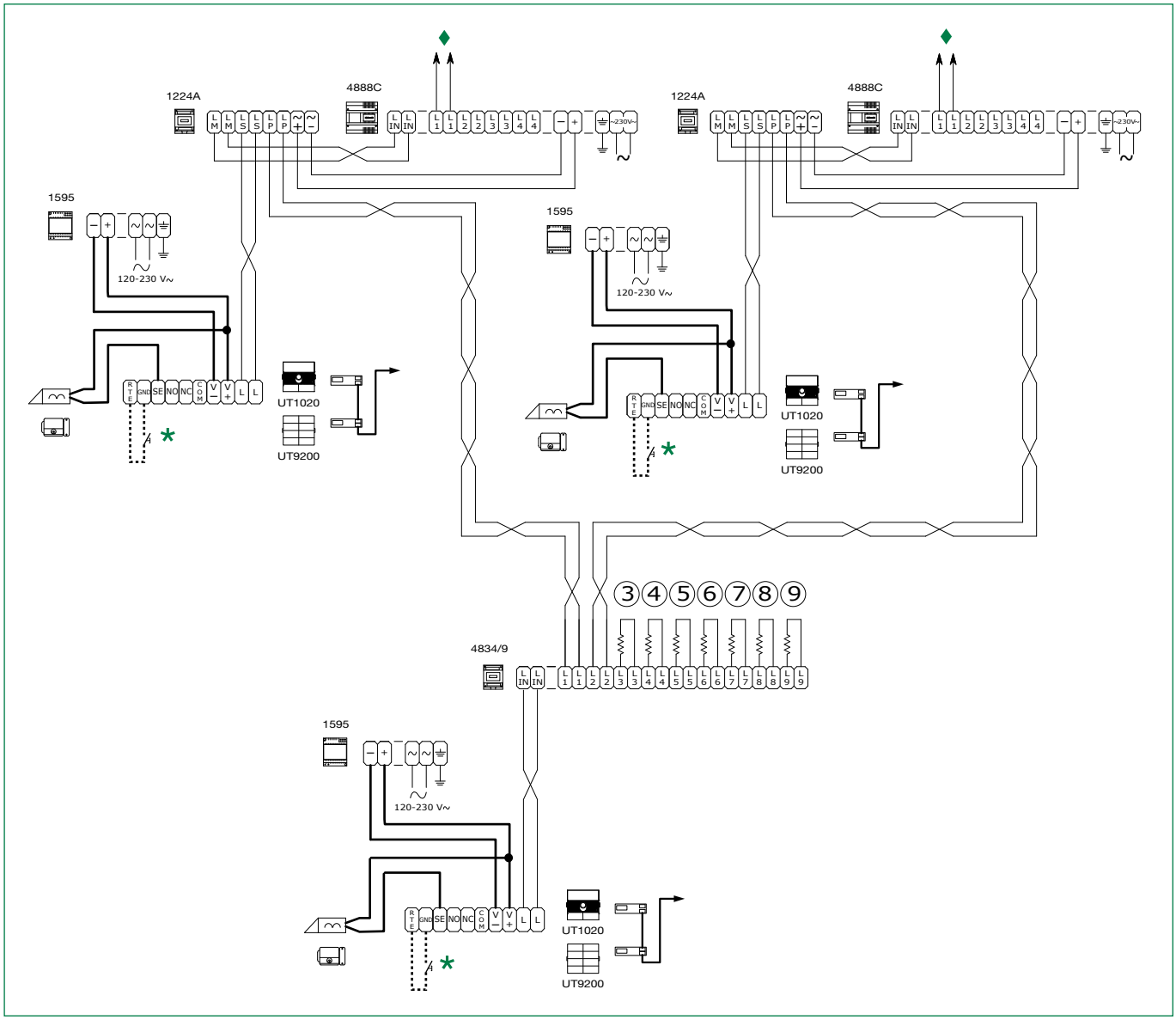

♦ Video entry riser.

✱ Local door-opener button. ***(20 m max.)***

Art. 6741W (/BM) and a secondary door entry monitor in branch connection

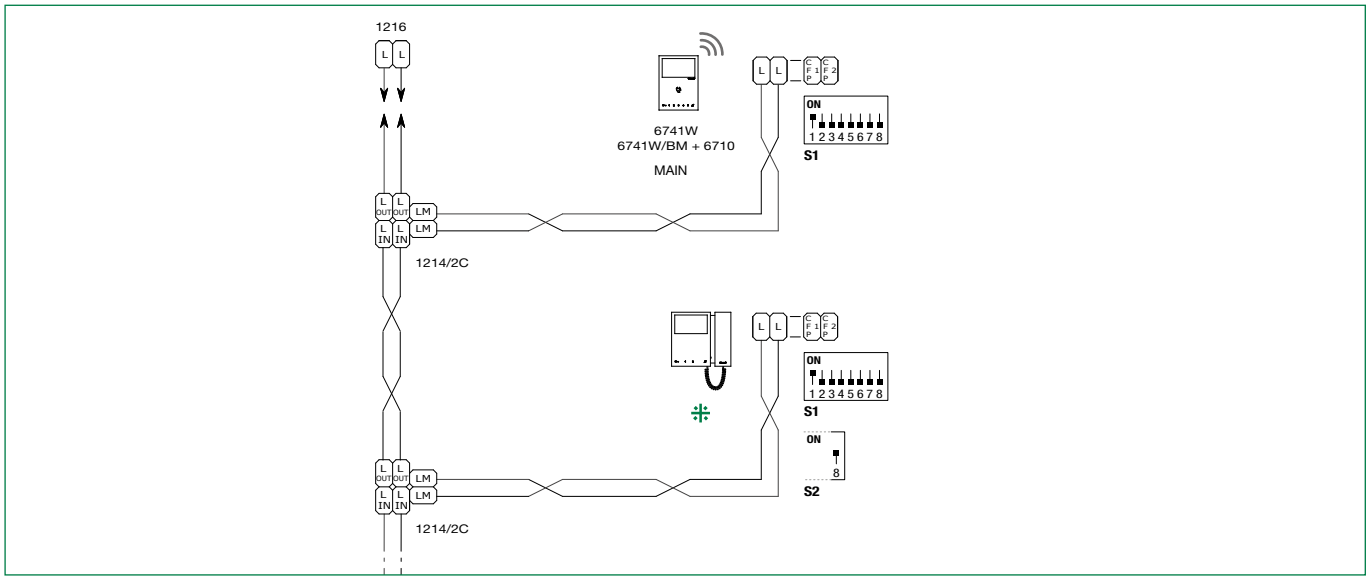

✣ *Compatible secondary door entry monitors: art. 6601W, 6601W/BM, 6701W, 6701W/BM, 6701W/8, 6721W, 6721W/BM, 6801W, 6801W/BM.*

Art. 6741W (/BM) and a secondary door entry monitor 6721W (/BM) in cascade connection

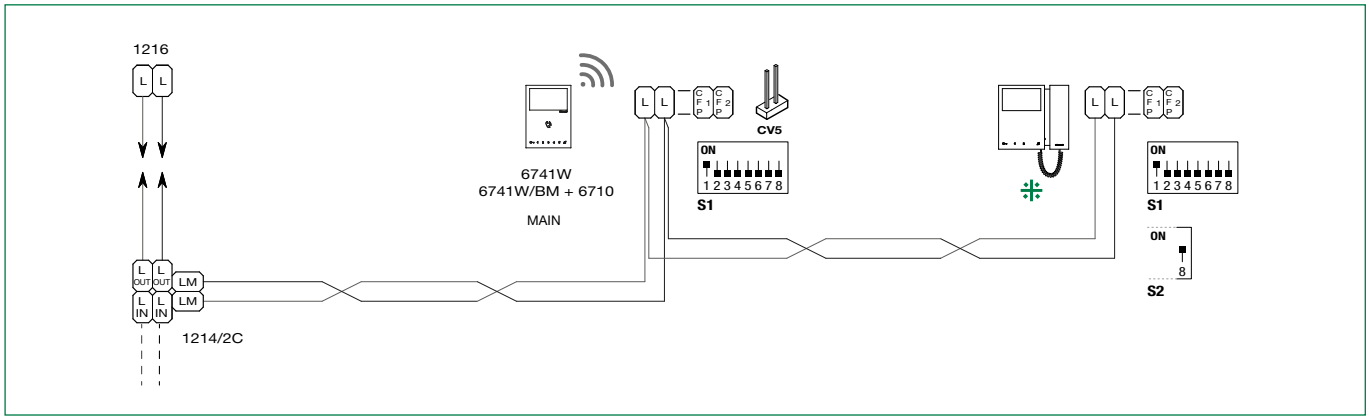

Compatible secondary door entry monitors: art. 6601W, 6601W/BM, 6701W, 6701W/BM, 6701W/8, 6721W, 6721W/BM, 6801W, 6801W/BM.

System performance and layouts

For further information of system performance and to view installation layouts, click on the system type that best meets your requirements:

- **Simplebus2 audio/video with 1210/1210A**
- **Simplebus2 audio/video with 4888C**
- **Audio/Video kit**

4th edition 03/2022
code 2G40002878

CERTIFIED MANAGEMENT SYSTEMS

ISO 9001 ISO 14001

www.comelitgroup.com
Via Don Arrigoni, 5 - 24020 Rovetta (BG) - Italy

Comelit®
Passion.Technology.Design.