User Manual
EG4 18K$_{PV}$

© 2023 EG4 Electronics, LLC. All rights reserved.
Version 1.1.0 | Information subject to change without notice.

Table of Contents

1 Safety 4
1.1 Safety Instructions 4
1.2 Important Safety Notifications 4
2 Brief Introduction 6
2.1 System Diagrams 6
3 Installation 7
3.1 Packaging List and Placement 7
3.2 Location Selection and Installation 7
3.2.1 Requirements for Installation Location 7
3.2.2 Installing the Inverter 8
3.2.3 Mounting Steps 9
3.3 Connection Overview 10
3.3.1 System Connections 10
3.4 PV Connection 13
3.4.1 Connecting PV to the Inverter 13
3.4.2 Steps for PV Connection 14
3.5 Battery Connection 14
3.5.1 Connecting Batteries to the Inverter 14
3.5.2 Battery Power Cable Connection 15
3.5.3 Battery Communication Cable Connection 15
3.6 Grid, EPS Load, and AC Connection 17
3.6.1 Grid Type and Regulation Connection 17
3.6.2 Grid and Load Connections for Split-Phase Service 17
3.6.3 Connecting AC to the Inverter 23
3.6.4 Steps for AC Connection 23
3.6.5 CT/Meter Connection 23
3.7 Working with a Generator 25
3.7.1 Generator System Connection 25
3.7.2 Connecting the Generator Start Signal (Dry Contact) 26
3.7.3 Generator Start and Stop Settings 26
3.7.4 Off-Grid Wiring Configuration 27
3.8 AC Coupling Installation Connection 28

3.8.1 AC Coupling Settings 29
3.9 Parallel System Connection 29
3.9.1 Connections for Parallel System 29
3.9.2 Parallel Information Display 36
3.9.3 Parallel Configuration 37
3.10 Monitor System Setup 38
3.10.1 Wi-Fi/4G Dongle Connection 38
3.10.2 Third-Party RS485 Communication 38
3.11 Online Monitoring System User Interface 39
3.11.1 Using the Web interface to set your Wi-Fi password. 40
3.11.2 Dashboard (Monitor tab) 41
3.11.3 Data tab 42
3.11.4 Configuration Tab 47
3.11.5 Overview 48
3.11.6 Maintenance 49
3.12 Smartphone App Setup 50
3.13 Local Monitoring Setup with the EG4 Monitor app 51
3.14 Troubleshooting Wi-Fi module 51
4 Operation Guide 52
4.1 Operation Mode and Function 52
4.1.1 Self-Usage Mode 52
4.1.2 Charge First Mode 53
4.1.3 AC Charger Mode 54
4.1.4 Grid Peak-Shaving Function 54
4.1.5 Smart Load Function 54
4.2 Rapid Shutdown 55
4.3 LCD Screen 55
4.3.1 Viewing Information and Alarm Fault/Record 55
4.3.2 Setting Parameters 57
4.4 Inverter Start-Up and Shutdown Procedure 61
4.4.1 Starting up the inverter 61
4.4.2 Shutting down the inverter 61
5 Troubleshooting & Maintenance 62

5.1 Regular Maintenance 62
5.2 LED Description 62
5.3 Troubleshooting Based on LCD Screen 62
5.3.1 Faults on the LCD and Fault List 62
5.3.2 Alarm on the LCD and Alarm List 65
5.4 Fan Replacement 67
6 Technical Specifications 68

1 Safety

1.1 Safety Instructions

International safety regulations have been strictly observed in the design and testing of the inverter. Before beginning any work, carefully read all safety instructions, and always observe them when working on or with the inverter. The installation must follow all applicable national or local standards and regulations.

Incorrect installation may cause:

- *injury or death to the installer, operator or third party*
- *damage to the inverter or other attached equipment*

1.2 Important Safety Notifications

There are various safety concerns that must be carefully observed before, during, and after the installation, as well as during future operation and maintenance. The following are important safety notifications for the installer and any end users of this product under normal operating conditions.

Dangers of High Voltages and Large Current

1. **Beware of high PV voltage.** Please install an external DC disconnect switch or breaker and ensure it is in the "off" or "open" position before installing or working on the inverter. Use a voltmeter to confirm there is no voltage present to avoid electric shock.

2. **Beware of high grid voltage.** Please ensure the AC switch and/or AC breaker are in the "off" or "open" position before installing or working on the inverter. Use a voltmeter to confirm there is no voltage present to avoid electric shock.

3. **Beware of high battery current.** Please ensure that the battery module breakers and/or on/off switches are in the "open" or "off" position before installing or working on the inverter. Use a voltmeter to confirm there is no voltage present to avoid electric shock.

4. **Do not open the inverter while it is operating** to avoid electric shock and damage from live voltage and current within the system.

5. **Do not make any connections or disconnections (PV, battery, grid, communication, etc.) while the inverter is operating.**

6. An installer should make sure to be well protected by reasonable and professional insulative equipment [e.g., personal protective equipment (PPE)].

7. Before installing, operating, or maintaining the system, it is important to inspect all existing wiring to ensure that it meets the appropriate specifications and conditions for use.

8. Ensure that the PV, battery, and grid connections to the inverter are secure and proper to prevent damage or injuries caused by improper installation.

Warning

1. **All work on this product (system design, installation, operation, setting, configuration, and maintenance) must be carried out by qualified personnel. To reduce the risk of electric shock, do not perform any servicing other than those specified in the operating instructions unless you are qualified to do so.**
2. Read all instructions before installing. For electrical work, follow all local and national wiring standards, regulations, and these installation instructions.
3. Make sure the inverter is properly grounded. All wiring should be in accordance with the National Electrical Code (NEC), ANSI/NFPA 70.
4. The inverter and system can inter-connect with the utility grid only if the utility provider permits. Consult with your local AHJ before installing this product for any additional regulations and requirements for your area.
5. All warning labels and nameplates on this inverter should be clearly visible and must not be removed or covered.
6. The installer should consider the safety of future users when choosing the inverter's correct position and location as specified in this manual.
7. Please keep children away from touching or misusing the inverter and relevant systems.
8. **Beware!** The inverter and some parts of the system can be hot when in use, please do not touch the inverter's surface or most of the parts when they are operating. During operation, only the LCD and buttons should be touched.

DISCLAIMER

EG4 reserves the right to make changes to the material herein at any time without notice. You may refer to the EG4 website at www.eg4electronics.com for the most updated version of our manual.

2 Brief Introduction

2.1 System Diagrams

This unit and its associated system are suitable for the following applications:

A. Solar and battery storage system

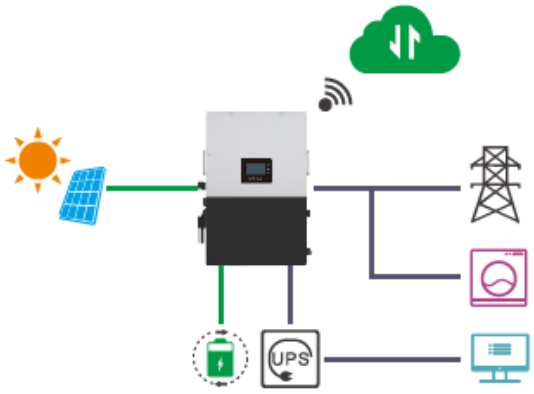

B. AC Coupling with existing solar system

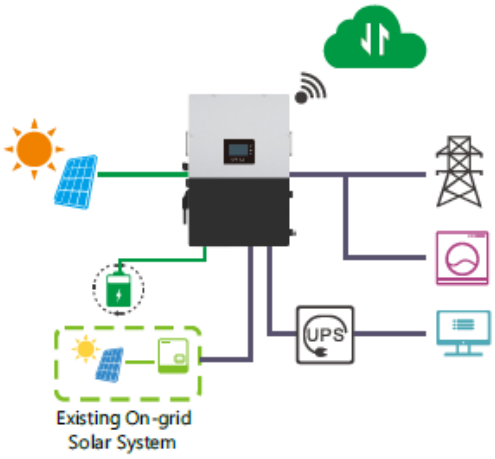

C. On-grid solar system without battery (Powers loads even without battery)

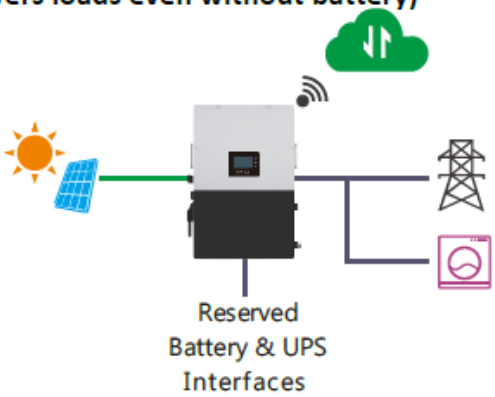

D. Off-grid and back-up applications

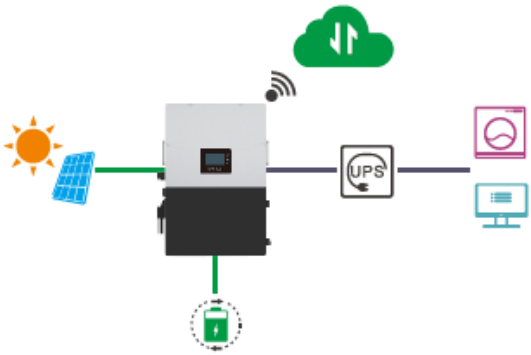

E. Single and three phase paralleling system

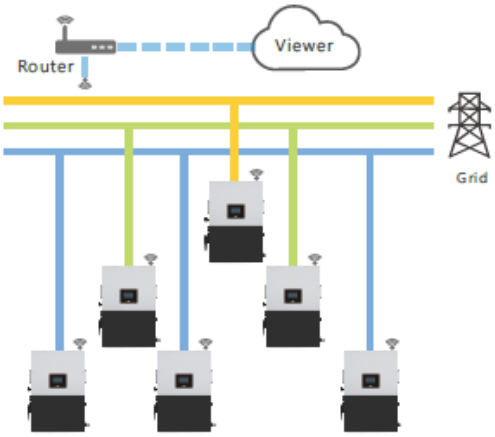

F. Energy storage system with peak shaving function

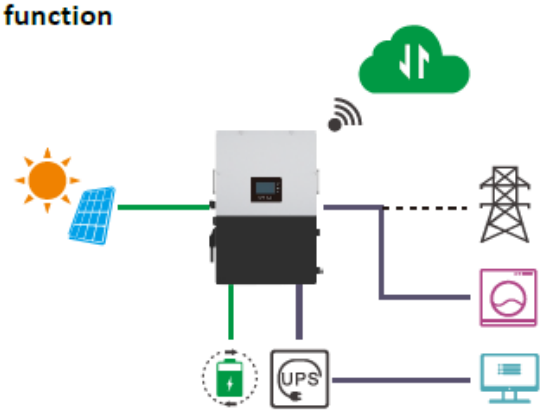

3 Installation

3.1 Packaging List and Placement

Packaging List

When the product is unpacked, the contents should match those listed below:

3.2 Location Selection and Installation

3.2.1 Requirements for Installation Location

1. The mounting wall should be strong enough to bear the weight of the inverter.
2. Please maintain the minimum clearances presented below for adequate heat dissipation.

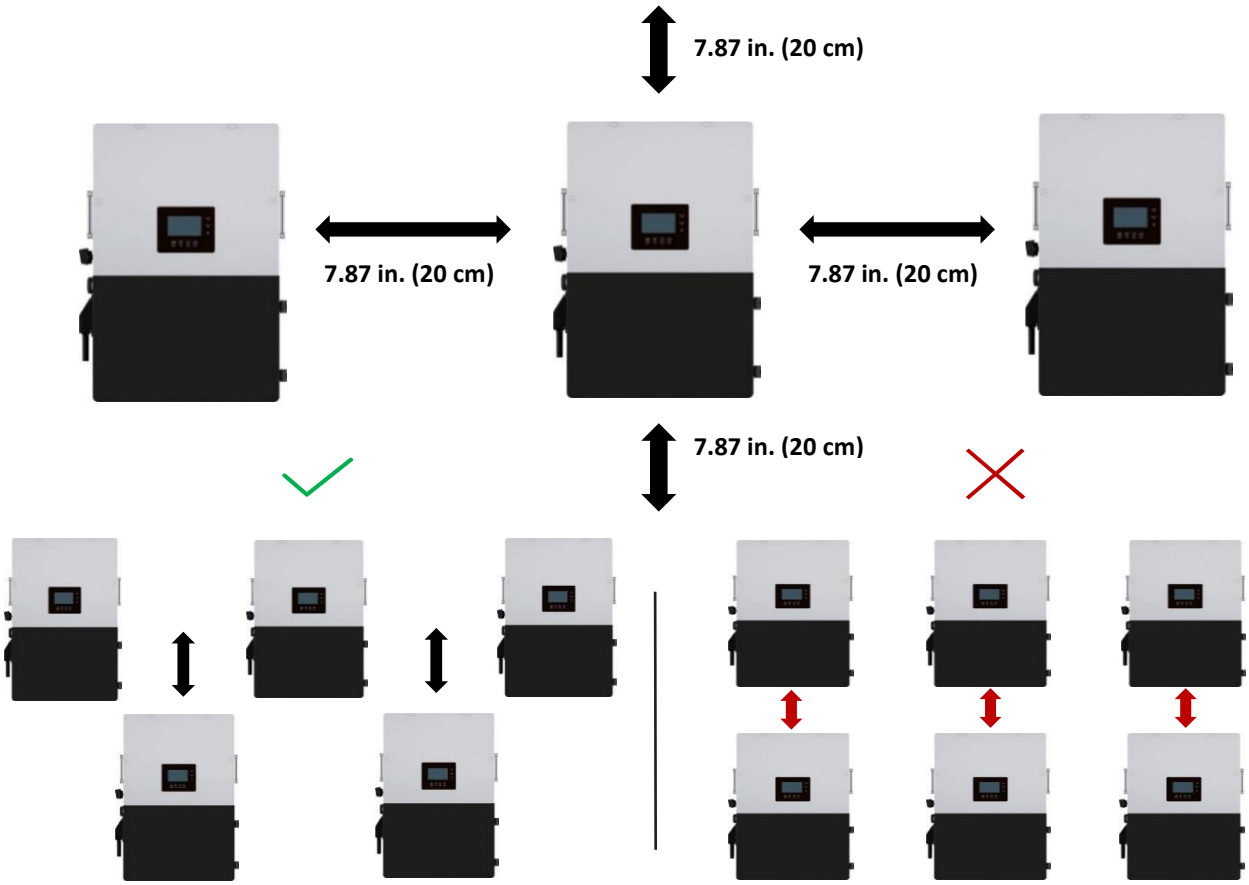

3. Never position the inverter in direct sunlight, rain, or snow. Please refer to the figure below, and choose a well-shaded site or a shed to protect the inverter from direct sunlight, rain, snow, etc. PROTECT the LCD screen from excessive UV exposure.

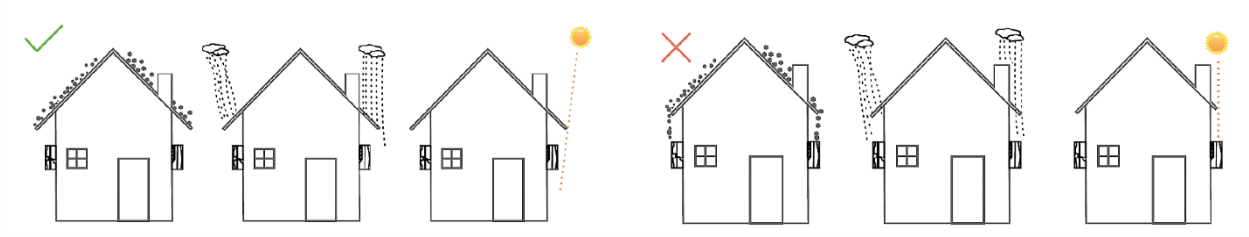

4. The inverter should be installed upright on a vertical surface.

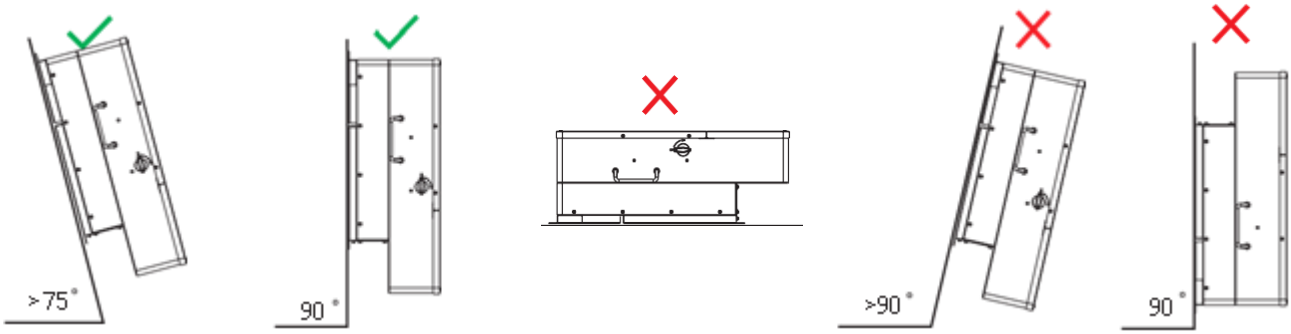

3.2.2 Installing the Inverter

The inverter is designed to be wall-mounted and should be installed on a vertical, solid, mounting surface, such as brick, concrete, or other **non-combustible** material. Two or more people may be needed to install the inverter due to its weight. The slots on the mounting bracket can accommodate various stud spacings from 12 in. (305 mm) to 16 in. (406 mm).

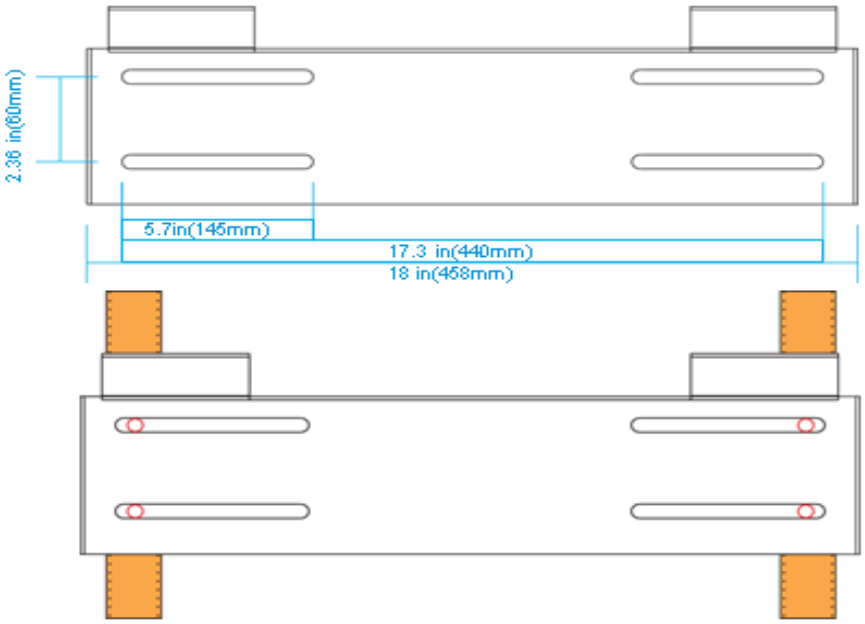

3.2.3 Mounting Steps

For installation on brick or concrete:

1. Mark the drill hole positions with the mounting bracket.
2. Drill four, 5/16 in. (48 mm) diameter holes, making sure the holes are deeper than 2 in. (50 mm).

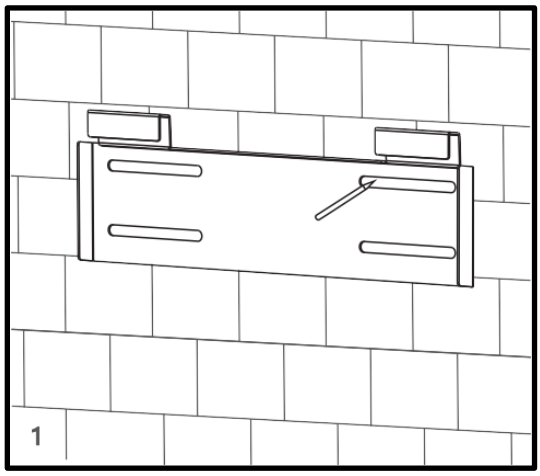

3. Insert the expansion bolts into the holes and tighten.
4. Use the corresponding nuts and washers (packaged together with the expansion bolts) to install and affix the wall-mount bracket onto the wall.

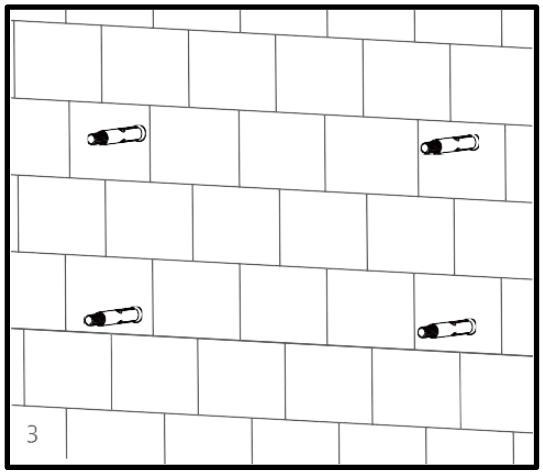

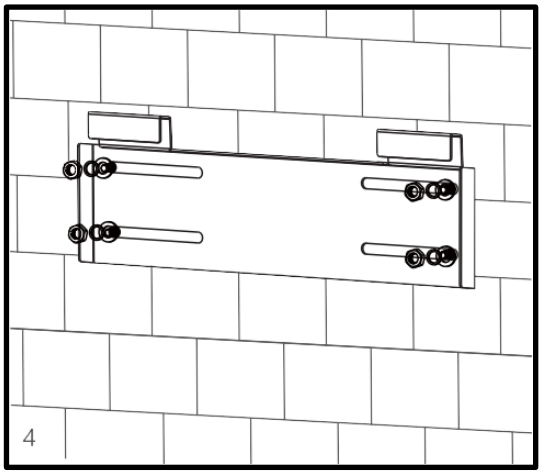

5. Hang the inverter on the wall-mount bracket and lock the inverter on the wall using two (2) self-tapping screws on the top of the inverter (not included with inverter). Lock the safety screws on the left and right sides

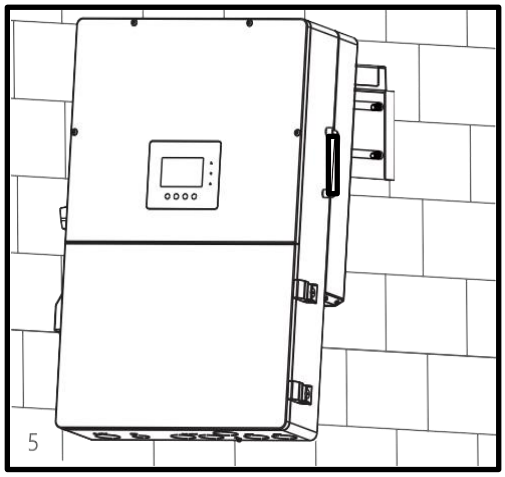

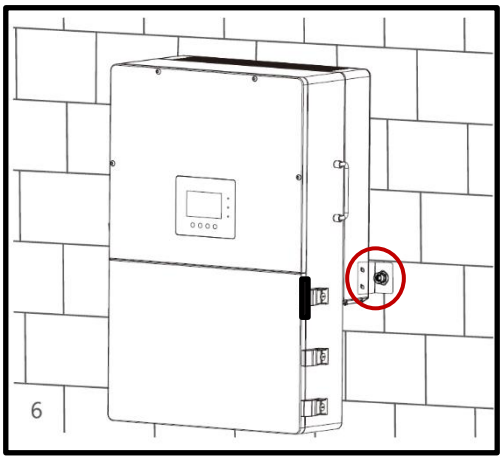

For installation on concrete board with wood studs:

Fasten the mounting bracket to the studs with four (4) heavy duty wood screws, then hang the inverter on the bracket and lock the inverter on the wall with two (2) self-tapping screws.

Please note that the wood screws and self-tapping screws are not provided with the inverter. Installers will need to acquire the screws before installation.

3.3 Connection Overview

3.3.1 System Connections

The system configuration overview is as below. For detailed diagrams, see *Section 3.6.2 - Grid and Load Connections for Split-Phase Service*.

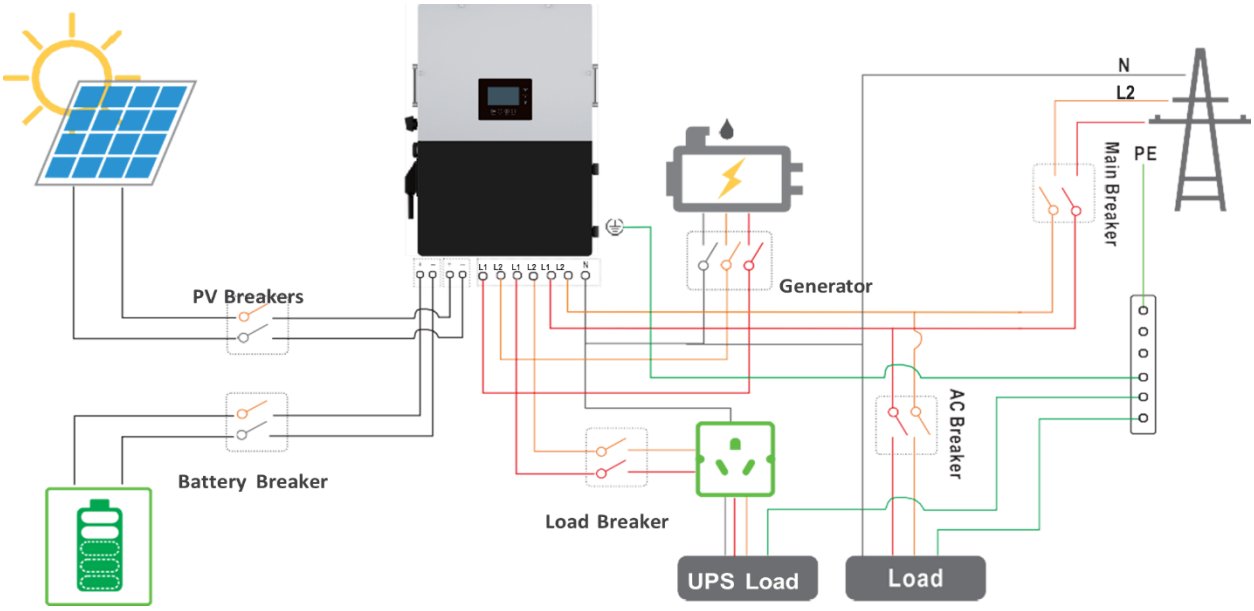

Breaker selection recommendation for both DC and AC

Breaker	Recommended Breaker Rating
PV Input	**600VDC/20A**
AC Input/Output	When UPS is used for ***whole*** home backup: **240VAC /200A Max.** When UPS is used for ***partial*** load backup: **240VAC /100A**
Generator	**240VAC /100A**

Overview of the Cable Box

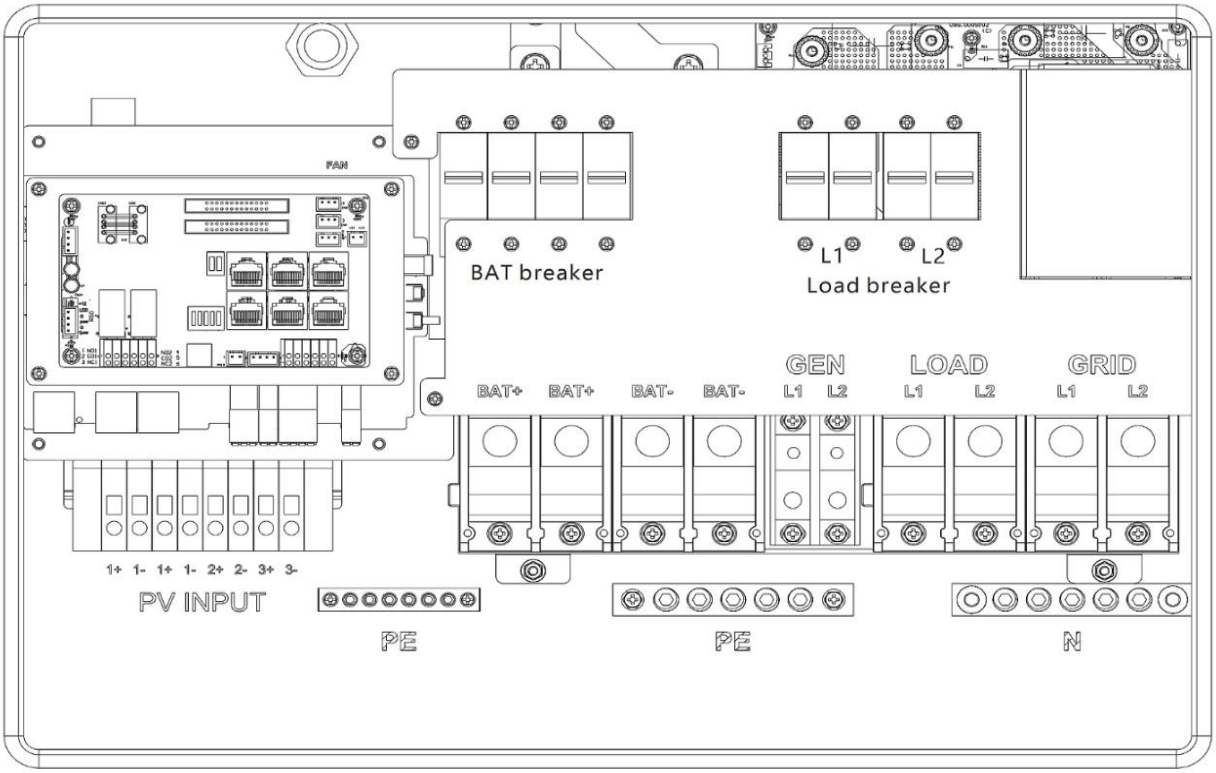

Integrated Bonded Load Breaker	**L1 :200A** **L2: 200A**
Integrated Bonded Bat. Breaker	**200A × 2**

Overview of Connection Ports

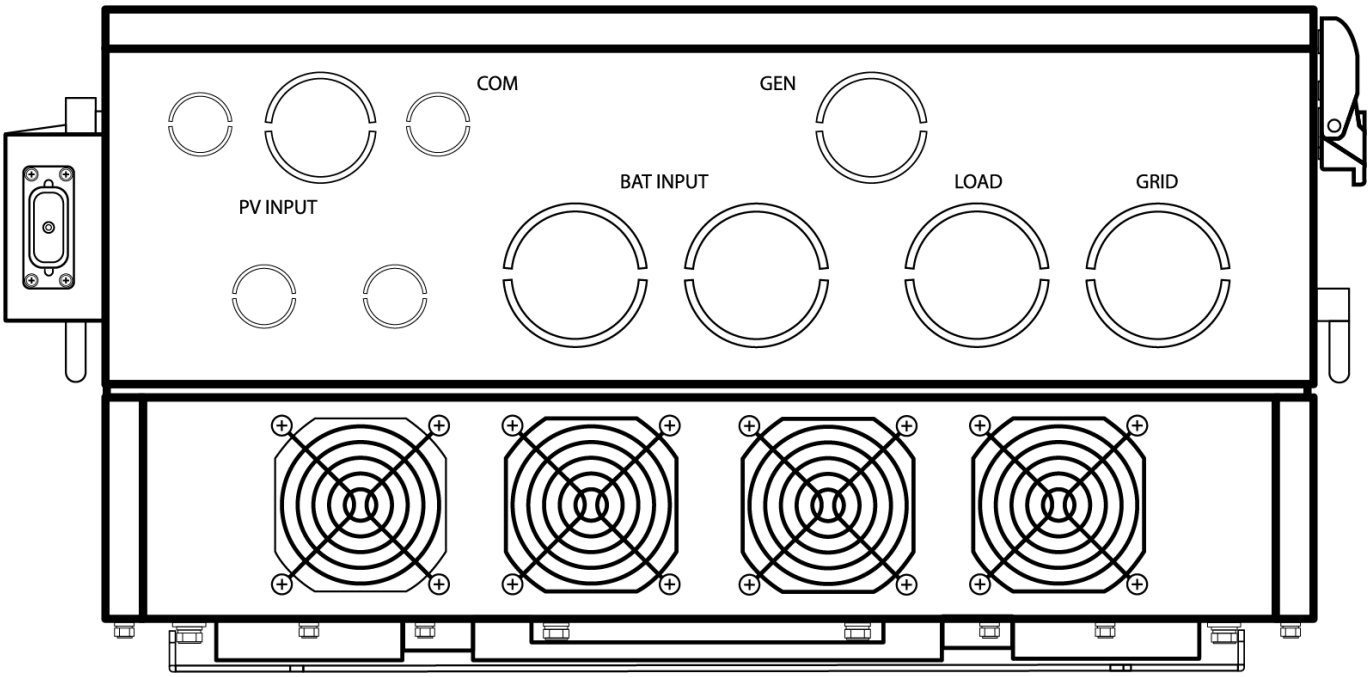

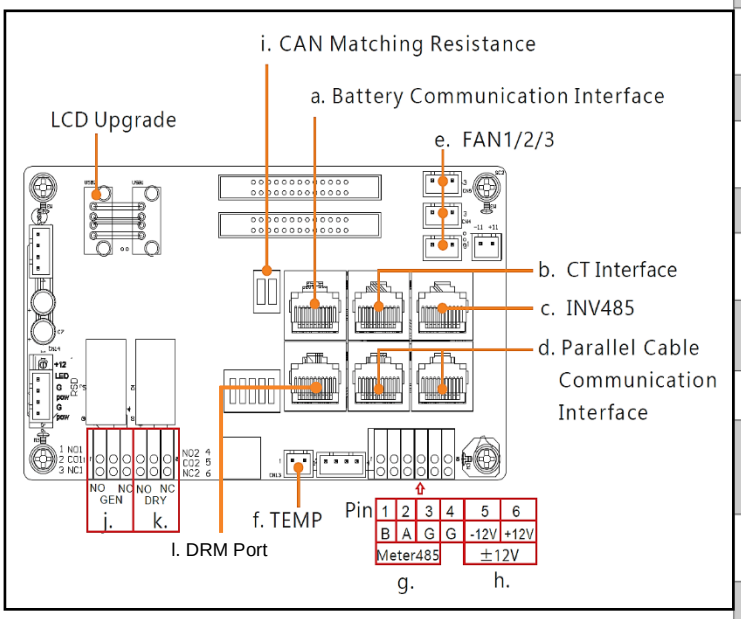

a.	Battery communication port (CAN & RS485)
b.	CT interface *(refer to Section **3.6.5** for CT connection)*
c.	INV 485: debugging port
d.	Parallel communication port *(refer to Section **3.1.1** for parallel connection)*
e.	Fans 1/2/3
f.	Temp sensor connection for lead-acid battery
g.	Meter 485B & 485A: for meter communication
h.	±12V: reserved for customer to use
i.	CAN matching resistance: set DIP switch when using inverters in parallel
j.	Connection for generator auto-start function: GEN (NO, NC)
k.	Reserved: DRY (NO, NC)
l.	DRM Port (Only applies in AU)

3.4 PV Connection

3.4.1 Connecting PV to the Inverter

Cable Requirements:

Cable Size	Minimum Insulator Voltage
10 AWG – 6AWG (Max) (6 mm^2 – 16 mm^2)	600V

Reminder

Verify the lowest ambient temperature of the installation location. The rated VOC on the solar module nameplate is obtained at STC (77°F/25°C). As the ambient temperature drops, the solar module VOC increases. Please ensure the maximum solar string voltage, corrected at the lowest temperature, does not exceed the inverter's maximum input voltage of 600V. *Consult with your installer to ensure that appropriate cable sizing is used due to various factors such as voltage drop and VOC.*

Important

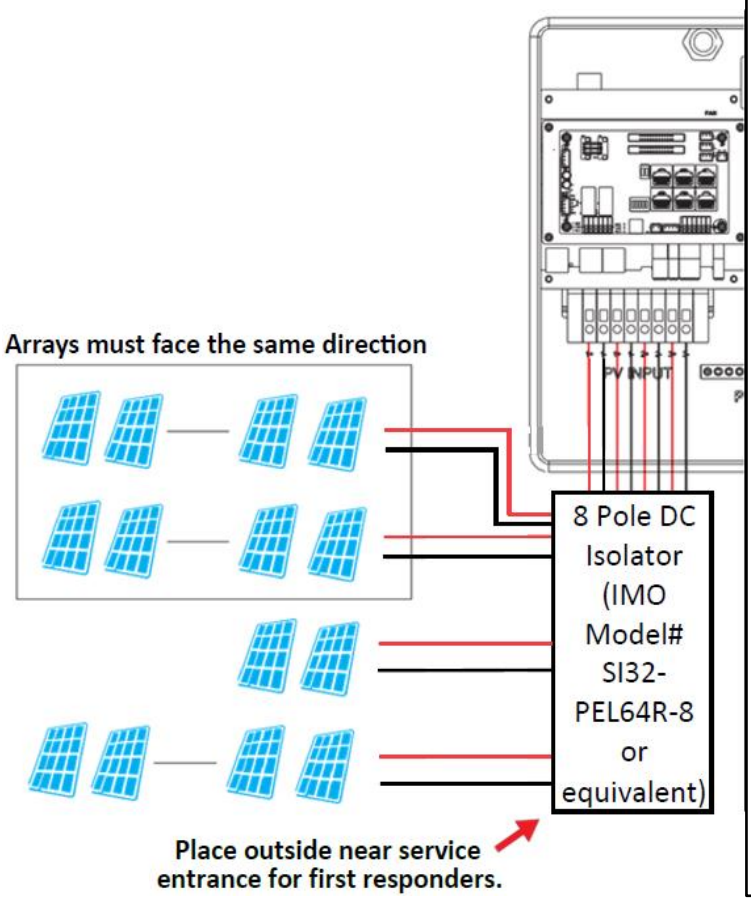

- The inverter has three MPPTs. For MPPT-1, users can connect two strings. For MPPT-2 and MPPT-3, users can connect one string.
- Strings for MPPT-1 **must** match one another. Each string should contain the same model, brand, and quantity of panels, but strings for MPPT-2 and MPPT-3 *can* vary from each other and MPPT-1.
- The inverter will limit the total MPPT-1/MPPT-2/MPPT-3 input current to 25A/15A/15A, respectively.
- The inverter will limit the max solar input power to 18kW total.

3.4.2 Steps for PV Connection

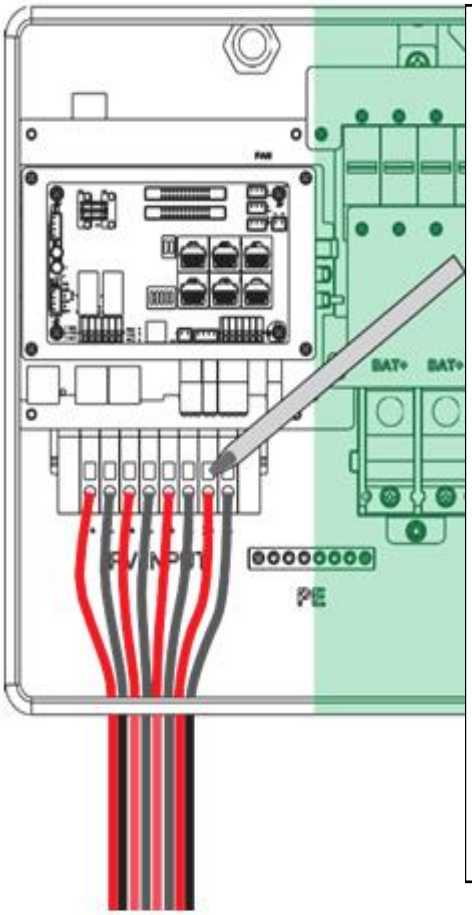

1. **Ensure all breakers and disconnect switches are in the OFF position before connecting or disconnecting wires. Use a voltmeter to confirm there is no voltage present.**
2. Strip off 1/4 – 5/16 in. (6 – 8 mm) insulation on the PV string's positive and negative conductors.
3. Use wire ferrules for the PV string conductors if they are stranded wire.
4. Insert the conduit fitting into the opening for the PV connection and tighten it from the inside using the counter nut.
5. Route the PV conductors through the conduit fitting and into the inverter.
6. Secure the PV conductors in place into the inverter inputs. Verify that they are secured properly by *lightly* pulling on them.
7. Ensure the conduit and conduit fittings are fastened reliably and the cable entry holes are sealed.

3.5 Battery Connection

3.5.1 Connecting Batteries to the Inverter

Cable Requirements:

# of cables	Cable Size	Max. Distance	Torque for cable connection
2 sets	1/0 AWG (53.5 mm^2)	10 ft.	165 in. lbs. (16.6 Nm)
2 sets	2/0 AWG (67.4 mm^2)	20 ft.	165 in. lbs. (16.6 Nm)
1 set	4/0 AWG (107 mm^2)	10 ft.	Max. 275 in. lbs. (31.1 Nm)
1 set	250 kcmil (127 mm^2)	20 ft.	Max. 275 in. lbs. (31.1 Nm)

3.5.2 Battery Power Cable Connection

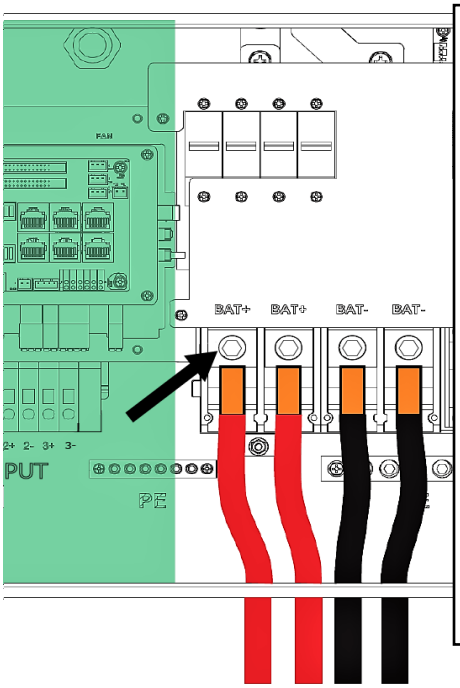

1. **Place all breakers in the OFF position before connecting or disconnecting wires. Ensure that there is no voltage present with a voltmeter.**
2. Strip 5/8–13/16 in. (15-20 mm) insulation from the cable end.
3. Route the battery power cable, connecting positive to BAT +, and negative to BAT -.
4. Secure the conduit fitting to the enclosure using the counter nut.
5. Fasten battery positive and negative cables to the mechanical terminals according to the markings with an M8 hex wrench.

3.5.3 Battery Communication Cable Connection

1. Use the included battery communication cable to connect the battery to the inverter and choose ***'Lithium'*** as the battery type. Please select the ***'Lead-Acid'*** setting if the lithium battery cannot communicate with the inverter. The battery communication port on the inverter is an RJ45 socket with the pinout for the RJ45 plug shown below.
Users can make the communication cable according to the inverter pin description below and the correct pinout of the communication port on the battery. The inverter supports both CAN and RS485 communication.

Pin	Description
1	NC
2	GND
3	NC
4	BAT CAN H
5	BAT CAN L
6	NC
7	BAT RS485 A
8	BAT RS485 B

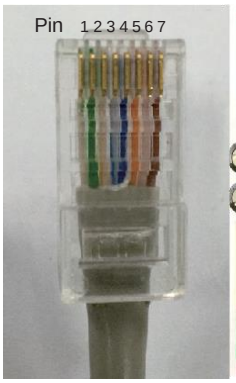

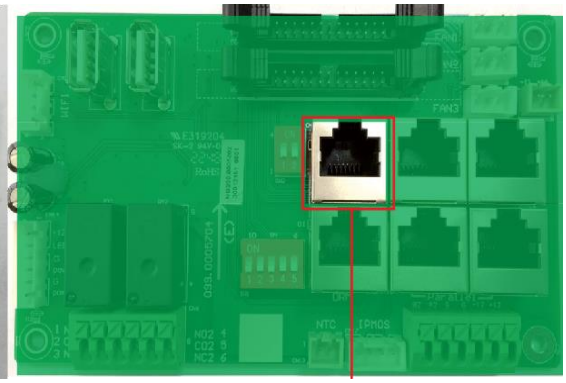

Battery CAN & RS485

2. After connecting the battery power and communication cables, enter the ***'Advanced'*** settings to choose the battery type and brand. When prompted, ***enter "00000"*** as the password to enter settings menu.

   Note: For communication with EG4 batteries, select "Lithium" under ***'Battery type'*** and then select "0" under ***'Lithium brand'.***

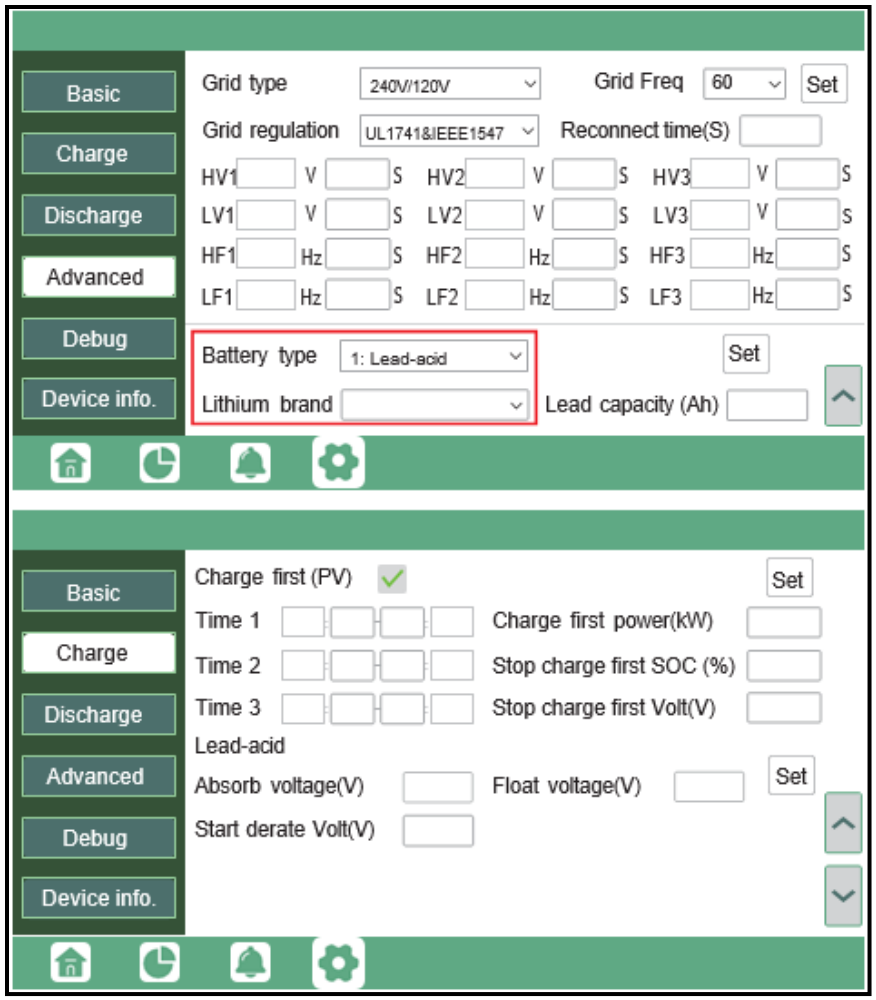

For Lithium Battery:

Please be sure that the lithium-ion battery being used is compatible with the inverter. EG4® strongly recommends using closed-loop communications between your battery and inverter. *Please contact your distributor or support@eg4electronics.com for an updated battery closed-loop communications list.*

If you are using multiple battery modules with the inverter, the inverter communication cable must be connected to the master battery. Please check with your battery supplier for battery master and slave settings.

For Lead-Acid Battery:

The temperature sensor for lead-acid batteries is optional.

There are three stages for lead-acid battery charging. For charge/discharge related parameters, please check the ***'Charge'*** and ***'Discharge'*** settings in *Section 4.3.2 - Setting Parameters*.

3.6 Grid, EPS Load, and AC Connection

3.6.1 Grid Type and Regulation Connection

This inverter can be used in 120/240V or 120/208V phase systems. This inverter has passed the main grid connection regulations in the U.S.

Users can choose the different grid type and regulation in the ***'Advanced'*** program, as shown below:

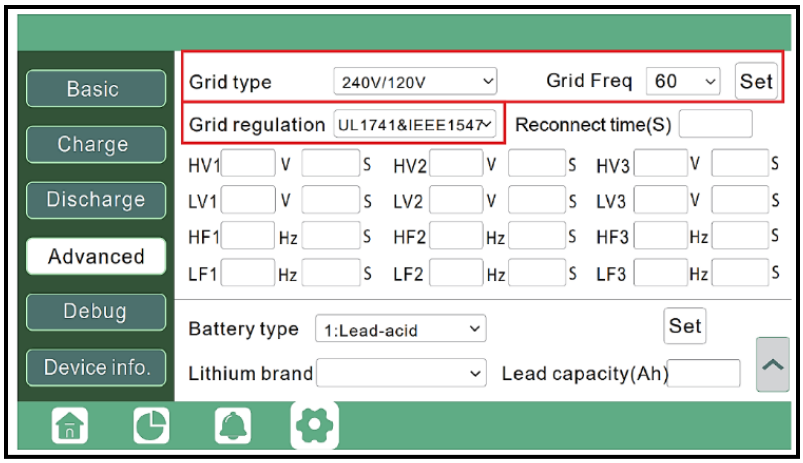

3.6.2 Grid and Load Connections for Split-Phase Service

The connection diagrams for 120/240V service are as follows. The connection diagram for 120/208V service is roughly the same except that the generator input is **not supported.**

The inverter can be connected to the load side of the service disconnect. This means if the busbar rating in the main panel must meet the NEC705.12(B)(3) requirements. Otherwise, a Line side connection can be made to avoid an expensive main panel upgrade.

Danger

There is a very real danger of overloading the service entrance wires with supply side taps. (Refer to NEC 220.) Users could essentially be adding loads to a possibly already fully loaded service entrance.

DO THIS ONLY UNDER ADVISEMENT OF YOUR ELECTRICIAN AND/OR INSPECTOR.

How to Connect the EG4 18kPV to the Utility and Home Wiring

Work should be performed by a licensed electrician.

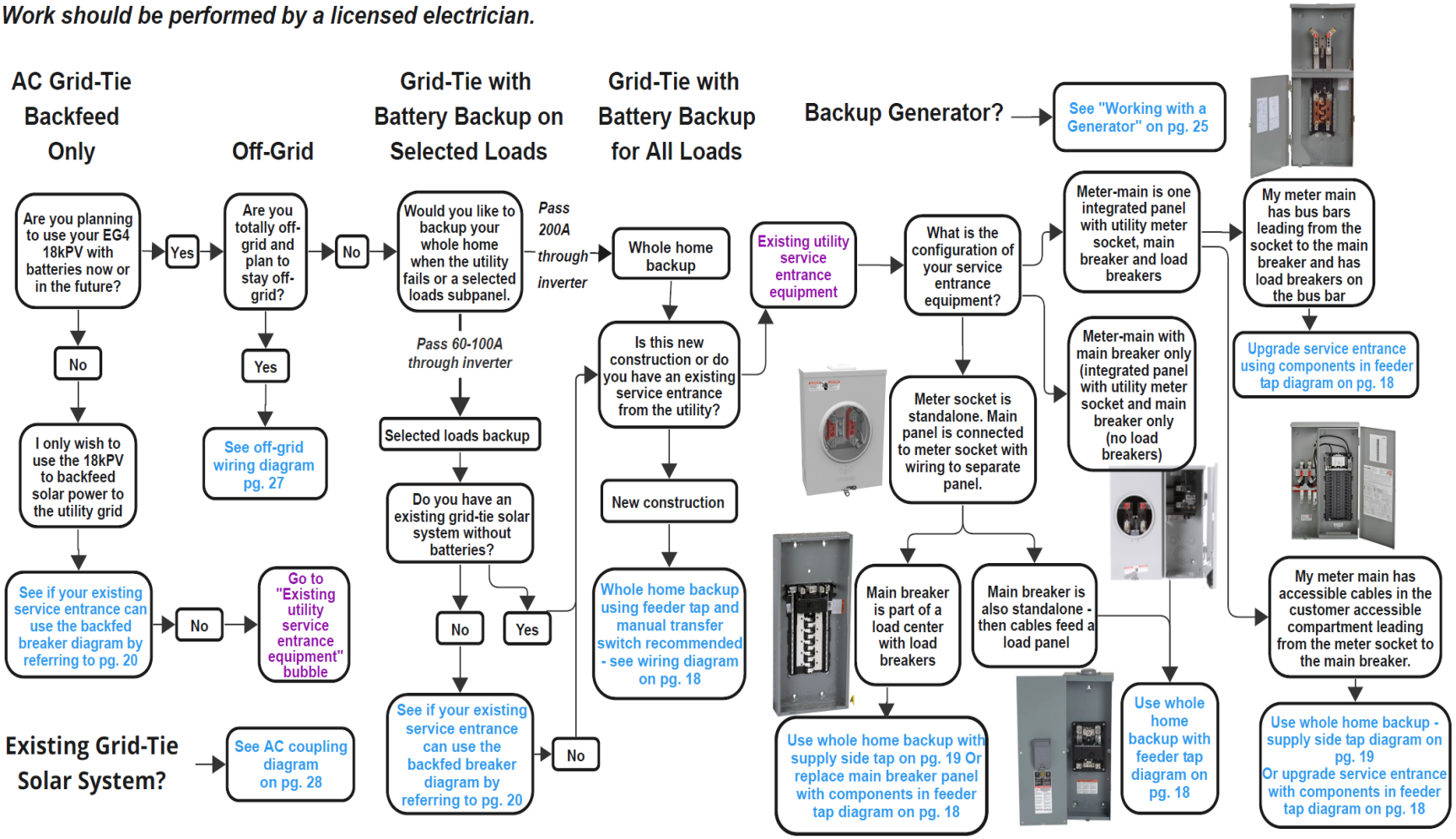

Whole Home Backup with Feeder Tap

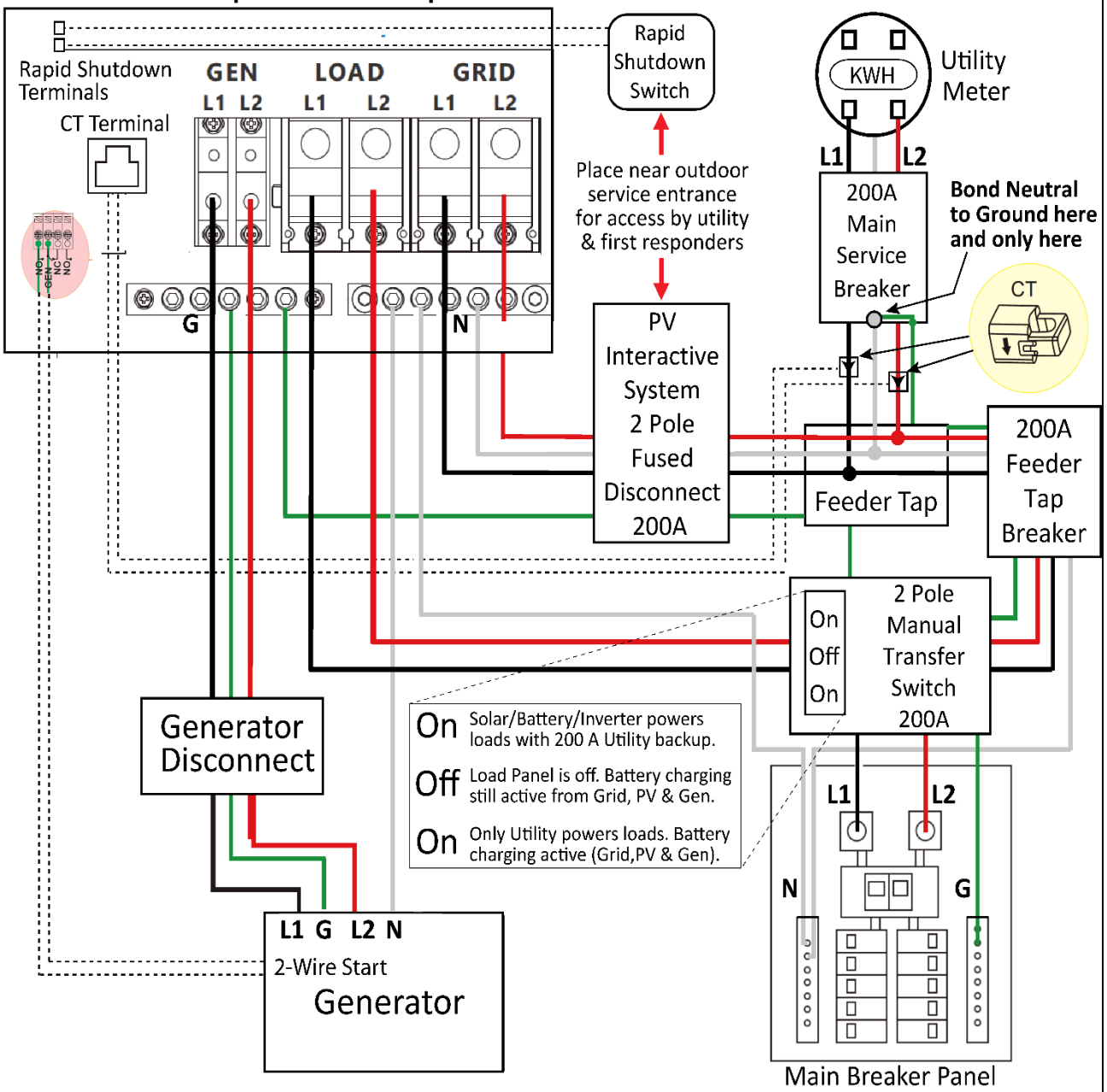

Feeder taps are the ideal and safest way to tie your inverter to the utility grid while achieving whole home backup, full solar back-feed, and full battery charging capability while protecting your home' s wiring.

However, feeder taps must be installed correctly.

The 200A main service breaker must be a stand-alone breaker - not a load center. There can't be any loads between the utility meter and the feeder tap. If the main breaker panel has a main 200A breaker and it is within 10' of the feeder tap, then some inspectors will allow removing the 200A feeder tap breaker. However, if this is done, the conductors between the feeder tap and the main breaker panel -including the manual transfer switch- are subject to the combined amperage of the utility (200A) and the back-feed capability of the inverter (50 Amps).

Feeder taps should be installed by a professional electrician. Ilsco

KUP-L-Taps are recommended but must be adhere strictly to installation instructions with proper torque applied (measured by a torque wrench). Alternatively, a Polaris or Burnby Insulated MultiTap Connector can be used, but these need to be torqued twice (once upon installation and once 24 hours later).

Whole Home Backup with Supply-Side Tap and Manual Transfer Switch

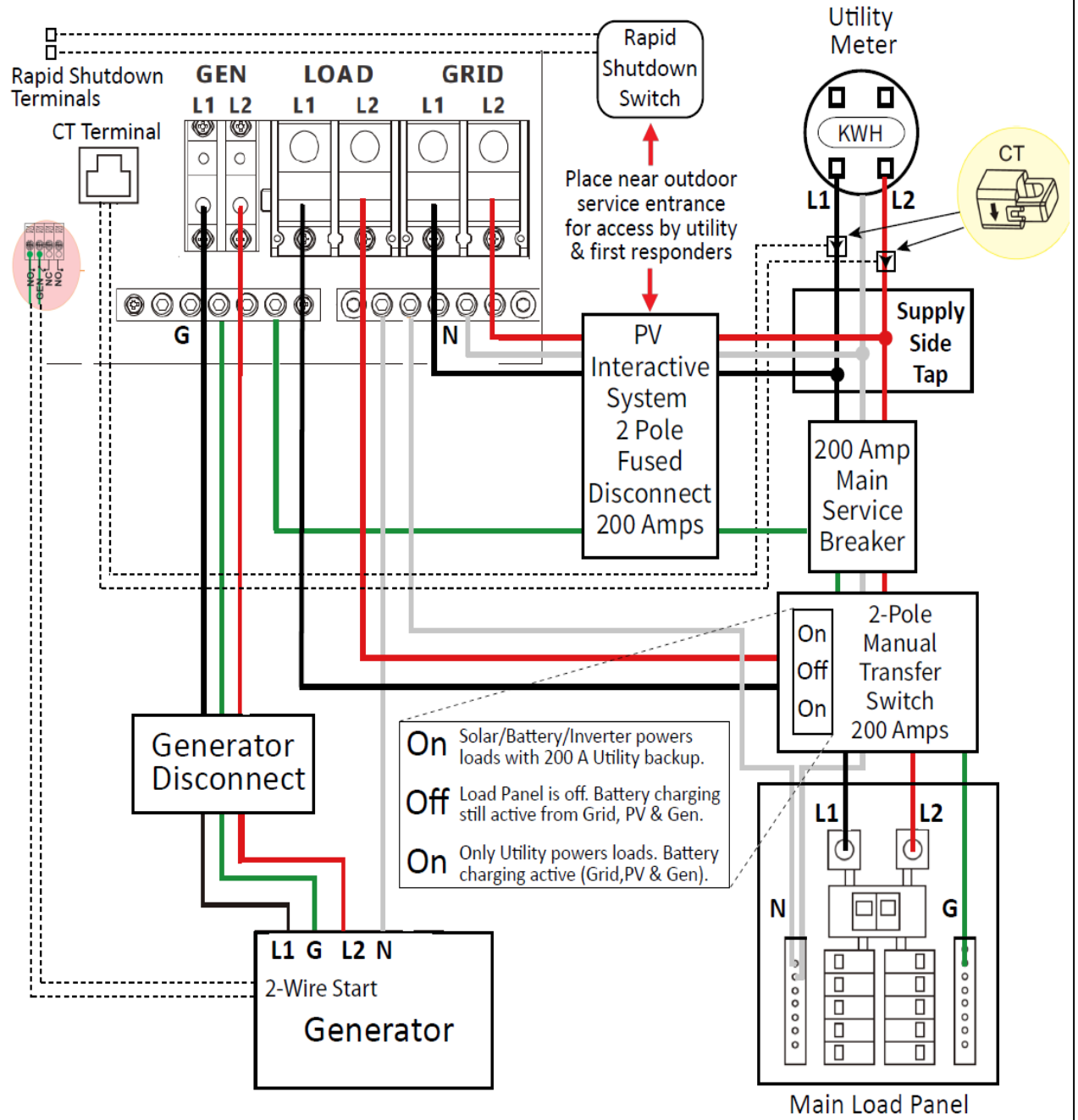

Supply side taps can be a cost effective way to intertie the inverter to the utility grid, achieve whole home backup. However, there is a danger of overloading your service entrance wires if you use the full battery charging capability of the inverter as you will be adding this significant load to the existing loads on your service entrance. Check with your electrician or inspector to ensure the installation will not cause overload of your service entrance wires. It is also possible to limit your battery charging current to make this configuration work. To avoid this issue, use a Feeder Tap (see Feeder Tap diagram). Supply-side Taps require the utility to shut down power during installation.

Caution - Supply Side Taps are only legal if the conductors between the meter socket and the main breaker or disconnecting means are accessible to be tapped by a code-approved means OR the bus bars or terminals on the meter socket or meter-main are rated for tapping. Most meter-main combination panels are not suitable for Supply Side Taps. Pass-through lugs are NOT permitted as there can be no loads between the meter and the point of tapping or the breaker bus will be overloaded.

Supply-Side Taps should be done by a professional electrician. Ilsco KUP-L-Taps are recommended but must be installed with strict adherence to installation instructions with proper torque applied. Alternatively, a Polaris or Burnby Insulated MultiTap Connector can be used but these need to be torqued twice - once upon installation and once 24 hours later.

Partial Home Backup with Backfed Breaker

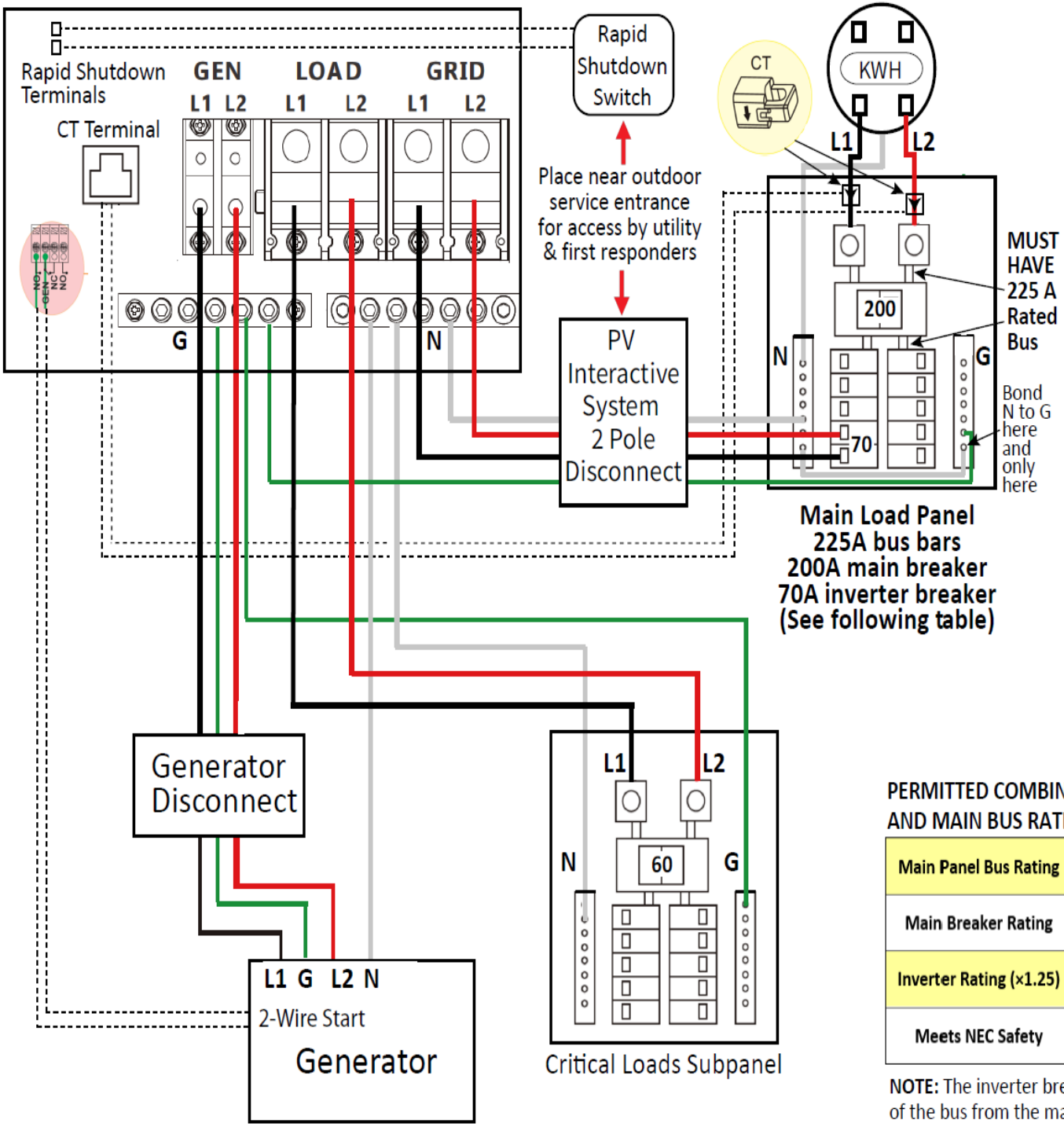

BACKFED BREAKERS are the most cost effective and simple way to connect your inverter to the Utility grid. They are simply a breaker installed on your main breaker panel that is backfed for net metering.

HOWEVER, TO USE A BACKFED BREAKER: Your 200 Amp panel MUST HAVE a 225 Amp rated breaker bus bar OR you need to downsize your Main Breaker to 175 Amps - see table below.

The other main disadvantage of a backfed breaker is you cannot take advantage of the 18kPVs ability to pass-through a full 200 Amp Service to your breaker panel thus making whole home backup impossible. The maximum critical loads subpanel breaker with this configuration is 70 Amps.

The NEC Code formula for working with backfed breakers is as follows: THE SUM OF THE MAIN SERVICE BREAKER PLUS 125% OF THE INVERTER OUTPUT RATING CANNOT EXCEED 120% OF THE BUS BAR

PERMITTED COMBINATIONS OF MAIN BREAKER RATINGS AND MAIN BUS RATINGS (Amps):

Main Panel Bus Rating	225A	200A	200A	150A
Main Breaker Rating	200A	200A	175A	100A
Inverter Rating (×1.25)	62.5A	62.5A	62.5A	62.5A
Meets NEC Safety	✓	✗	✓	✓

NOTE: The inverter breaker must be located at the opposite end of the bus from the main breaker. Use 70A breaker for inverter.

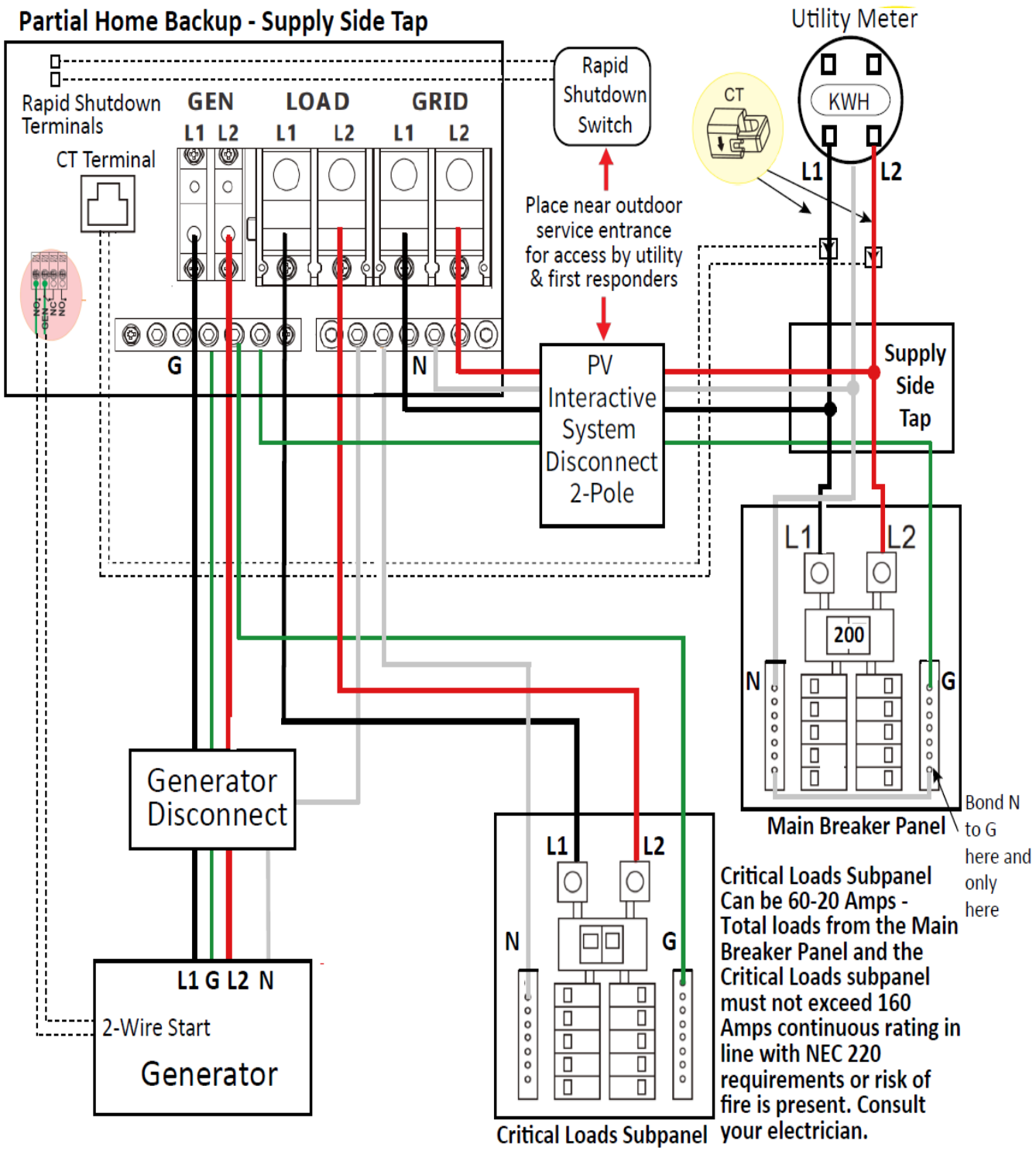

PARTIAL HOME BACKUP – SUPPLY SIDE TAP

If you have a 200 Amp Rated Main Panel and a 200 Amp Main Breaker like most homes do and therefore cannot use a Backfed Breaker (see Backfed Breaker diagram) then a supply side tap with a Critical Loads Subpanel may be your solution. This only works when you can find a place in your meter main that will allow your electrician to make a tap between the utility meter and the main 200 Amp breaker. Some Meter-Mains have an actual cable that runs between the meter socket outputs and the Main Breaker allowing for a KUP-L type tap or equivalent.

DANGER: THERE IS THE VERY REAL DANGER OF OVERLOADING

YOUR SERVICE ENTRANCE WIRES WITH THIS CONFIGURATION. You will be essentially adding loads to your possibly already fully loaded Service Entrance. DO THIS ONLY UNDER ADVISEMENT OF YOUR ELECTRICIAN AND/OR INSPECTOR.

UPGRADING YOUR SERVICE ENTRANCE TO A STAND-ALONE METER SOCKET ALLOWS YOU TO DO A WHOLE HOME BACKUP SAFELY USING A FEEDER TAP (See Feeder Tap Diagram).

Note: The amperage rating of the PV Interactive System Disconnect should be at least 70 Amps and should match the amperage of the Critical Loads Subpanels Main Breaker. Consult your electrician for sizing of the Supply Side Tap conductors, the PV Interactive System Disconnect, and the Critical Loads subpanel.

3.6.3 Connecting AC to the Inverter

Cable Requirements:

Current	Cross-section	Torque Value
100A	3–2 AWG (26.7–33.6 mm²)	95 in. lbs. (10.7 Nm)
200A	2/0 AWG (67.4 mm²) only for service entrance conductors 3/0 AWG (85 mm²) for all feeder conductors	165 in. lbs. (18.6 Nm)
Ground	6 AWG recommended	95 in. lbs. (10.7 Nm)

3.6.4 Steps for AC Connection

Reminder

After connecting all AC wiring, put the built-in LOAD breaker back to the ON position before providing power to the load.

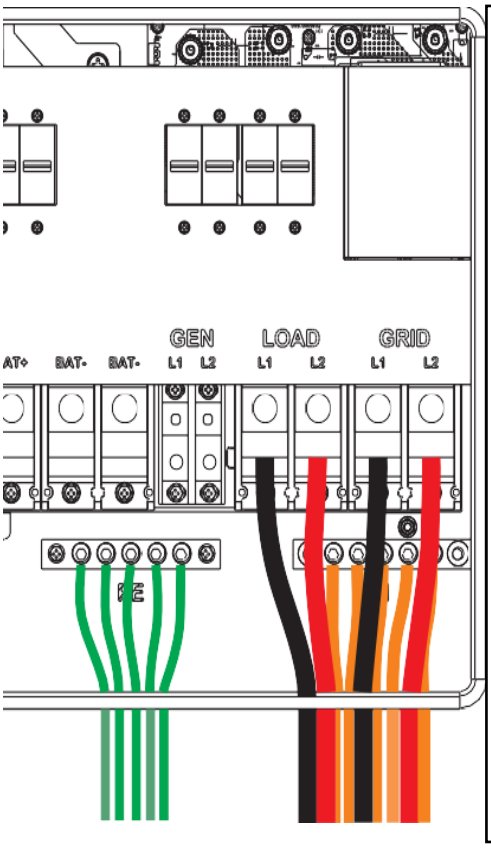

1. **Before connecting or disconnecting AC wires, ensure all breakers are in the off position. Before connecting or disconnecting AC wires, ensure all breakers are in the OFF position. Check that there is no voltage present with a voltmeter.**
2. Strip off 5/16–3/8 in. (8–10 mm) insulation from the AC cables.
3. Use wire ferrules if the cables are made of fine stranded wires.
4. Secure the conduit fitting to the enclosure using the counter nut of the fitting.
5. Fasten the GRID and LOAD cables to the terminal block in accordance with the terminal labels using an M8 hex wrench. (For ground terminal, use an M5 hex wrench.)
6. Secure conduit to the conduit fitting.
7. Check that the cables are connected properly. Take appropriate measures to ensure that the conduit and conduit fitting are properly secured and seal the cable entry holes.

3.6.5 CT/Meter Connection

To measure the power imported from and exported to the grid, a pair of CTs or one, three-phase meter must be installed at the service entry point in or near the main service panel. Two CTs are provided with each inverter.

CT Port Pin Definition

The CT interface for the two (2) CT connections is an RJ45 port. The two (2) CTs come with premade plugs, so they can be connected directly to the port.

Pin	Description
1-4	Reserved
5	CT2N
6	CT2P
7	CT1N
8	CT1P

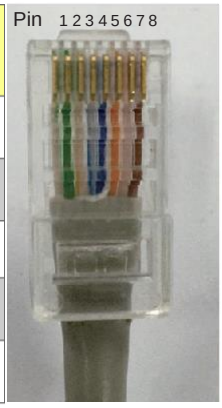

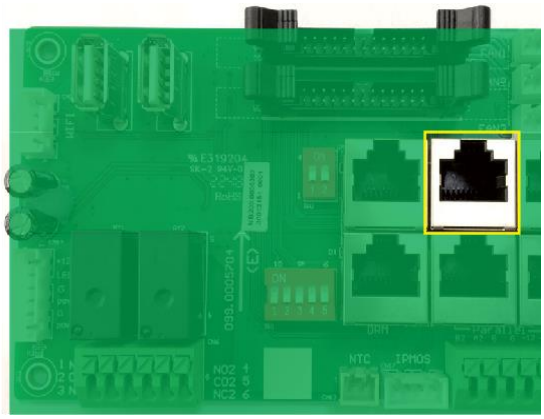

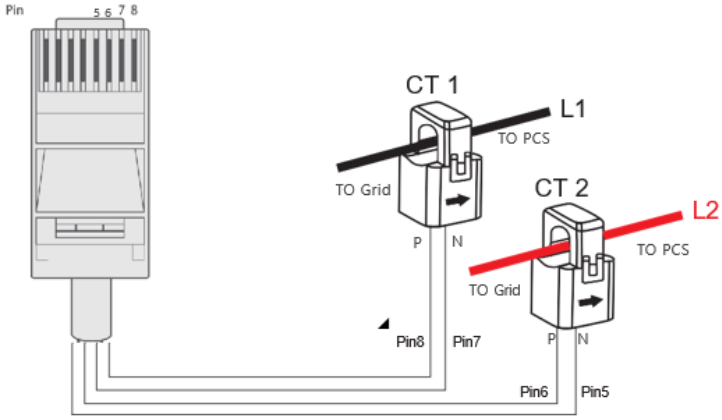

Please refer to the connection diagram to the left for the correct position of the CTs. Clamp the 2 CTs onto the L1 and L2 wires at the service entry point in the main service panel.

The arrows on the CTs must point toward the inverter.

CT Clamp Ratio

The inverter supports three ratios of CT clamps - 1000:1, 2000:1, and 3000:1. The CT ratio of the included CTs is 3000:1.

If you are using a third-party CT, please ensure that the CT ratio is one of the supported types. Select the correct CT ratio setting on the inverter monitoring page or on the inverter LCD.

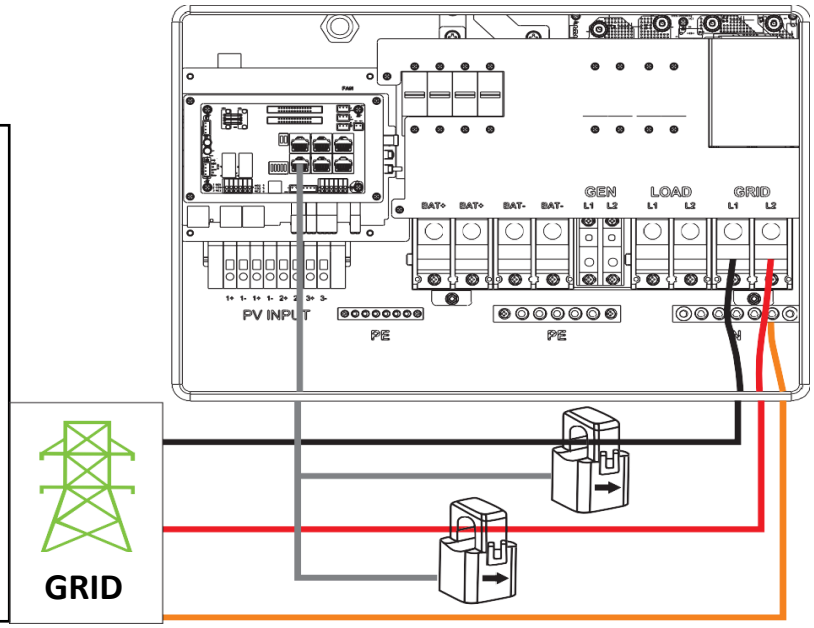

Extending the CT Clamp Cable

The CT wires can be extended with a common ethernet cable if they are not long enough. An RJ45 adapter is needed for the extension. The CT wires can be extended up to 300 ft. (around 100 m).

Meter Connection

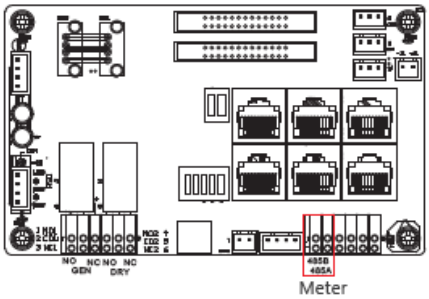

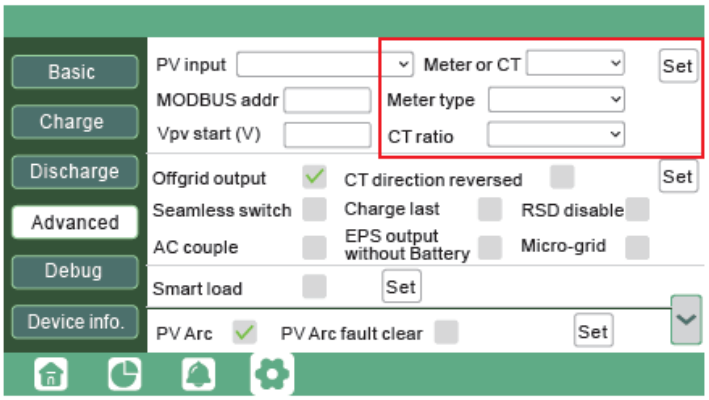

If a meter for import/export detection is required instead of CTs, the meter needs to connect to the 485A and 485B 'Meter' terminals on the inverter.

Currently, only EASTRON SDM630Modbus 100A three-phase meters can be used. Please contact your distributor for availability or visit *www.eastrongroup.com* for this product.

3.7 Working with a Generator

3.7.1 Generator System Connection

This hybrid inverter can work with a generator. There are GEN ports on the inverter for connecting the generator.

When the generator is started, all the loads connected to LOAD will be supplied power by the generator. The battery will be charged by the generator as well.

Generator requirements:

1. The generator should be ground-neutral bonded.
2. It should be a 240VAC, 60 Hz generator.
3. Generator capacity should be **between** 6 – 21.6kW.

3.7.2 Connecting the Generator Start Signal (Dry Contact)

The generator start signal must be connected to the COM board GEN (NO, NC port) if users want to start the generator remotely. The pass-through relay on the generator port is 90A. When the generator is on, please ensure that the total load and charge current will not exceed the 90A limit.

Important

Do not connect to the DRY (NO, NC port), as this port has not been configured for this use and will not send the signal needed to start your generator!

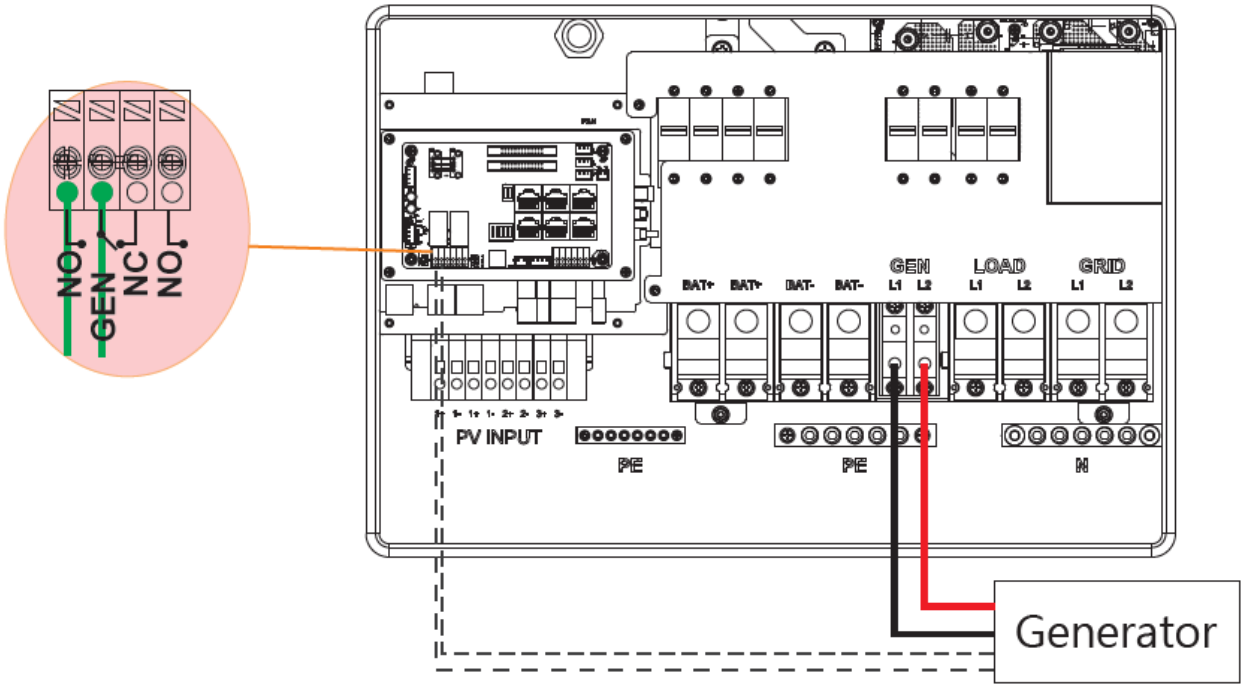

3.7.3 Generator Start and Stop Settings

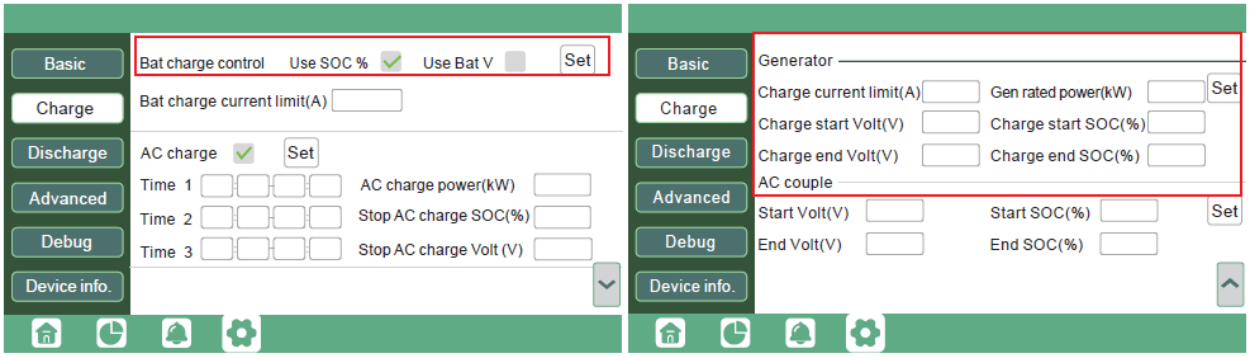

The ***'Bat charge control'*** setting will determine whether the system will use either battery SOC or the battery voltage to start or stop the generator.

Generator Start Conditions

The generator will start *when utility fails* ***and*** one of the following conditions is met:

- *when the battery is discharged to the cut-off setting* ***or***
- *there is a force charge request from battery* ***or***
- *when the battery voltage or SOC is lower than the generator '****Charge start Volt/SOC****' setting*

Generator Stop Conditions

When battery voltage or SOC is higher than the **Charge end Volt/SOC** settings.

3.7.4 Off-Grid Wiring Configuration

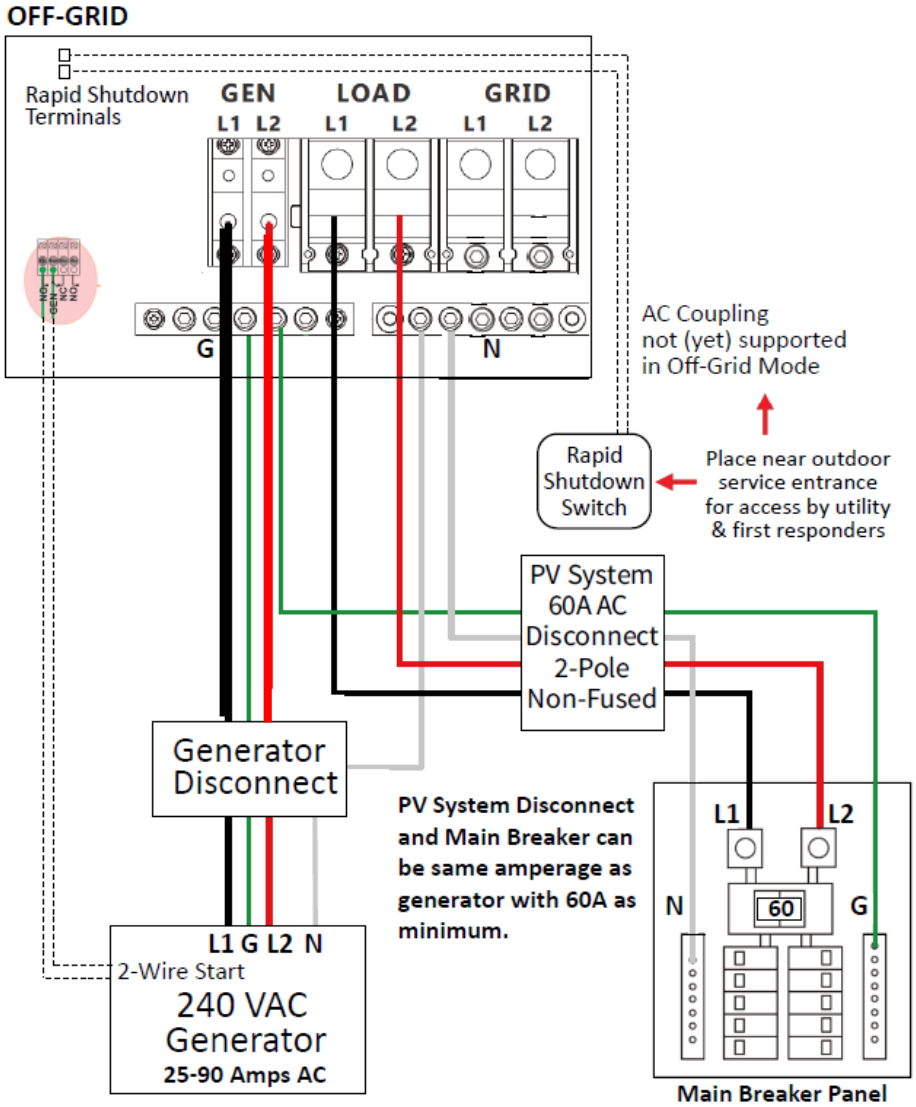

The amperage of the critical loads subpanel can be the same amperage as the generator input if present. The generator can be 25-90A—the critical loads subpanel should have a minimum of 60A to fully utilize battery power. Therefore, if a generator larger than 60A is installed, the critical loads subpanel amperage should match to use the full backup power of the generator.

3.8 AC Coupling Installation Connection

The inverter can accept PV solar inputs to both MPPT channels and AC coupled solar input at the same time. The AC coupled solar input can be up to 90A of AC power or 21.6kW of solar. The MPPT channels can handle up to 18kW of solar, with 12kW available for back feeding the utility grid. Therefore, up to 33.6kW of AC power could be sent back to the grid. For this amount of back feed, users will need either a feeder tap or supply side tap as the point of utility interconnection. *See feeder tap and supply side tap diagrams on pages 18 and 19.* **The existing solar system is connected to the inverter's GEN port.**

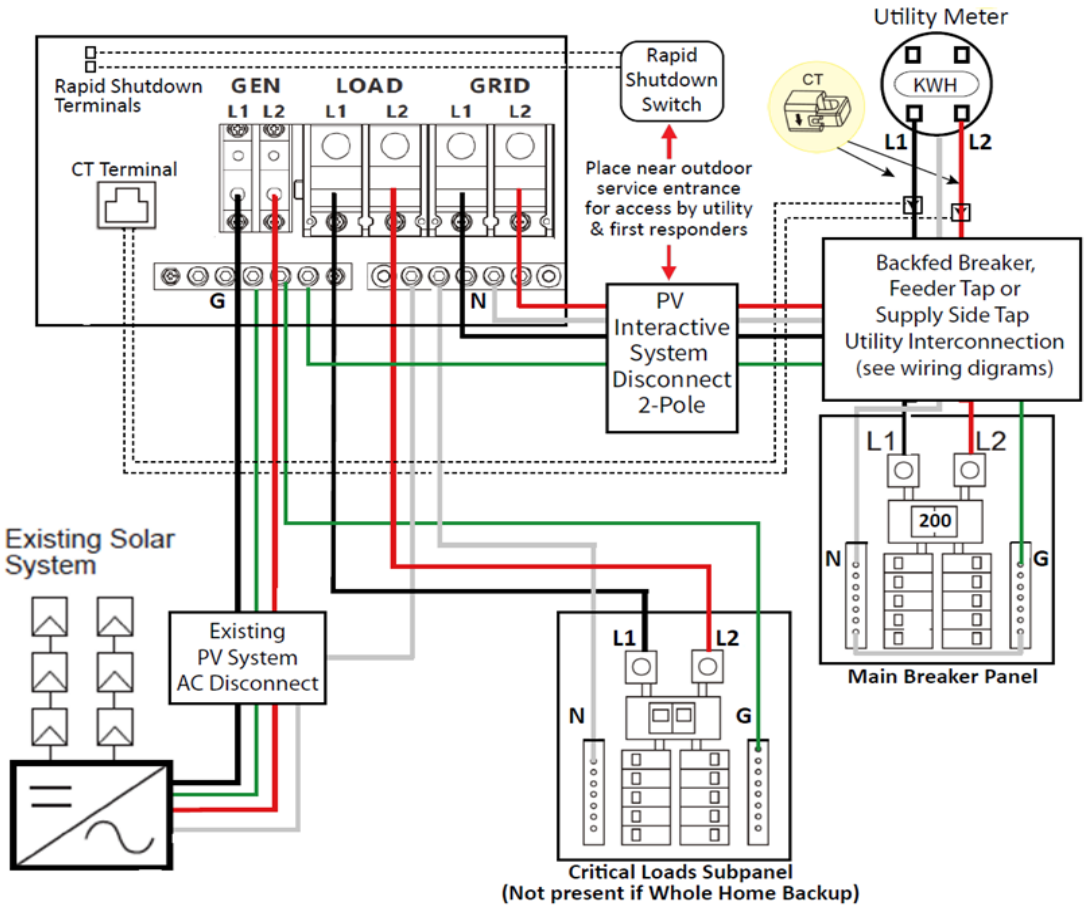

After the AC couple function is enabled:

When the grid is on, the GEN terminal is connected to the GRID terminal inside the inverter. In this case, the hybrid inverter will bypass the interactive inverter AC to the GRID and LOAD.

When the grid is off, the GEN terminal is connected to the LOAD terminal inside the inverter. In this case, the hybrid inverter will work as a power source for the grid-interactive inverter to synchronize and feed power to the micro-grid. The loads will be supplied by solar power first. If solar panels are generating more power than load consumption, the excess solar power will be stored in the batteries. When solar power exceeds the sum of load power and max battery charging power (e.g., when the batteries are nearly full), the inverter will signal the grid interactive inverter to reduce power via the frequency-shifting, power-reduction mechanism, thus maintaining the balance of generation and consumption of the micro-grid system.

What is frequency-shifting power reduction?

All UL1741SA compliant grid-interactive inverters have the Frequency-Watt feature, which requires the grid-interactive inverter to reduce power with increasing grid frequency. The power will drop to zero before the over-frequency trip threshold is reached.

When the hybrid inverter requires an on-grid inverter to reduce power, it simply shifts the output frequency up slightly, and the grid-interactive inverter will limit its output power accordingly after sensing this frequency shift.

3.8.1 AC Coupling Settings

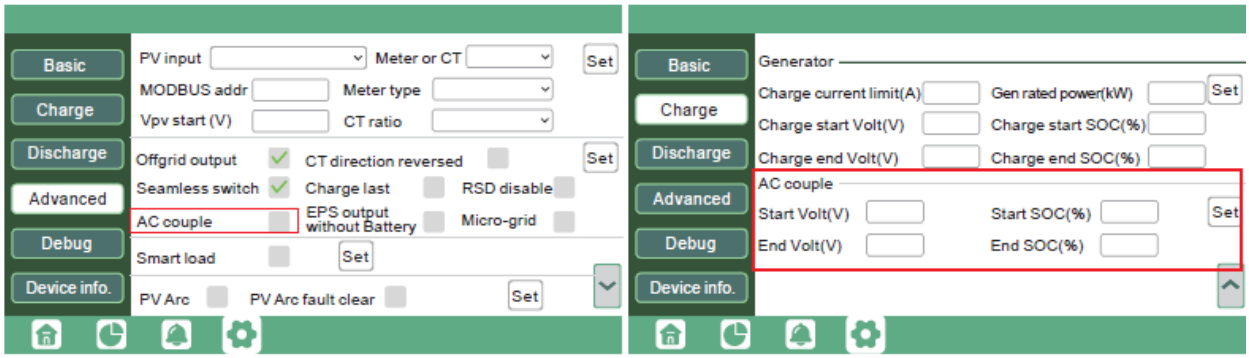

The **AC couple** setting must be enabled when connecting an existing on-grid system to the GEN terminal.

Start SOC (%): The SOC at which the AC coupled inverters are turned on when in off-grid mode (50% to 70% recommended).

End SOC (%): The SOC at which the AC coupled inverters are shut down when in off-grid mode (90% recommended).

When on-grid and feed-in grid are enabled, the AC-coupled inverter will always be on, and it will sell any extra power back to the grid. Ensure you are allowed to sell power to your utility provider when using AC-coupled PV arrays on-grid.

3.9 Parallel System Connection

3.9.1 Connections for Parallel System

The hybrid inverter supports parallel connection to expand power and energy capacity to suit different usage scenarios. **Up to 10 units can be paralleled to reach a capacity of 120kW.**

The parallel wiring diagrams are as follows. The manual bypass switch connects the loads to LOAD panel as default. If the inverters fail, users can switch the loads to utility.

a. 12KW x 3 Parallel system installation connection (3 @ 240V/120V)

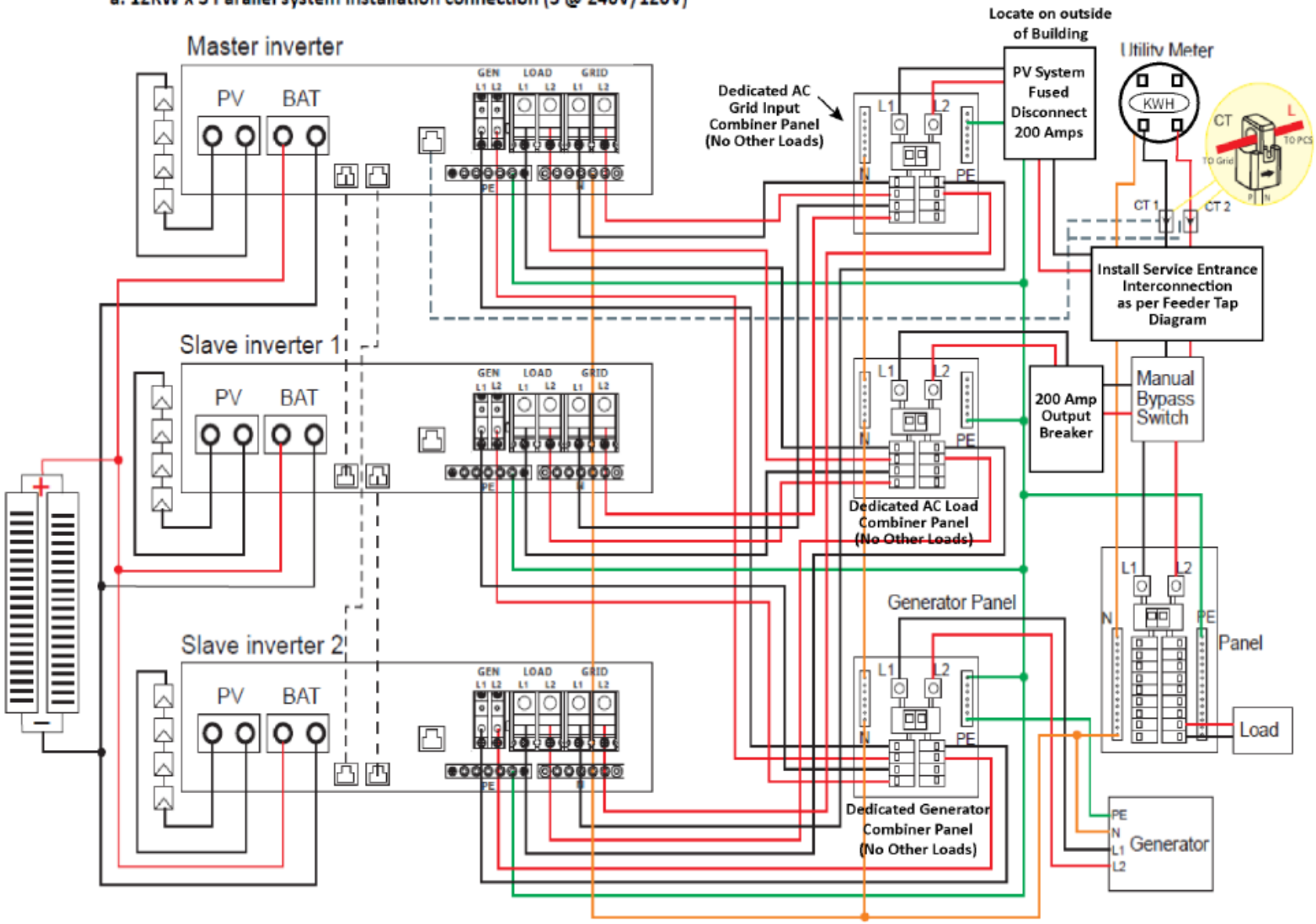

Please put the 2-bit CAN balancing resistor switch to ON status for the first and end inverter of the daisy chain loop.

Inverter settings for (a.)

Grid type setting for each inverter

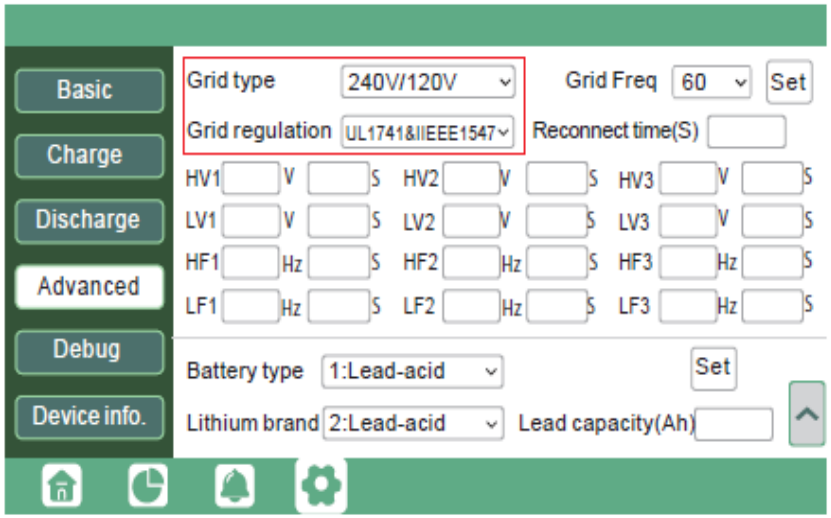

Inverter 1 settings

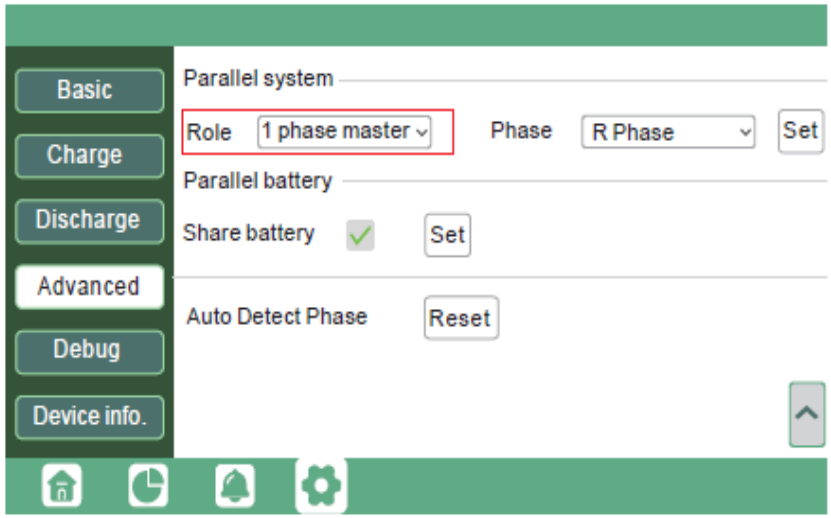

Inverter 2 settings

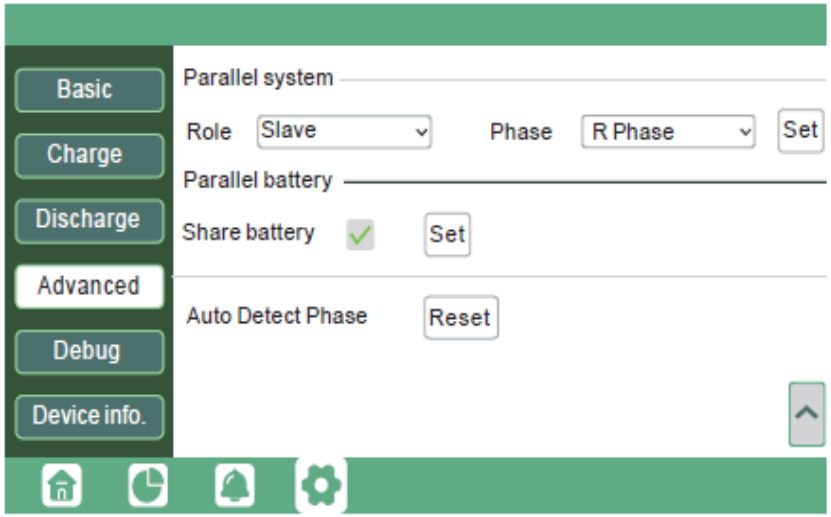

Inverter 3 settings

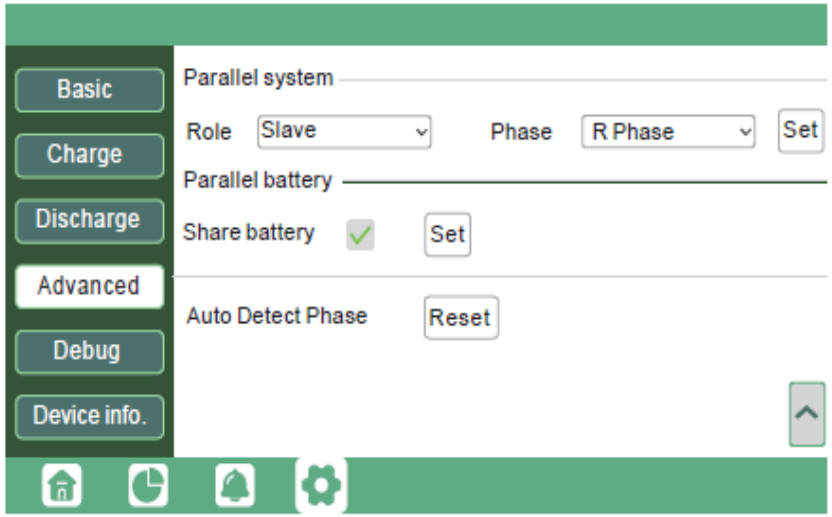

b. 12KW x 3 Parallel system installation connection (3 @ 208V/120V)

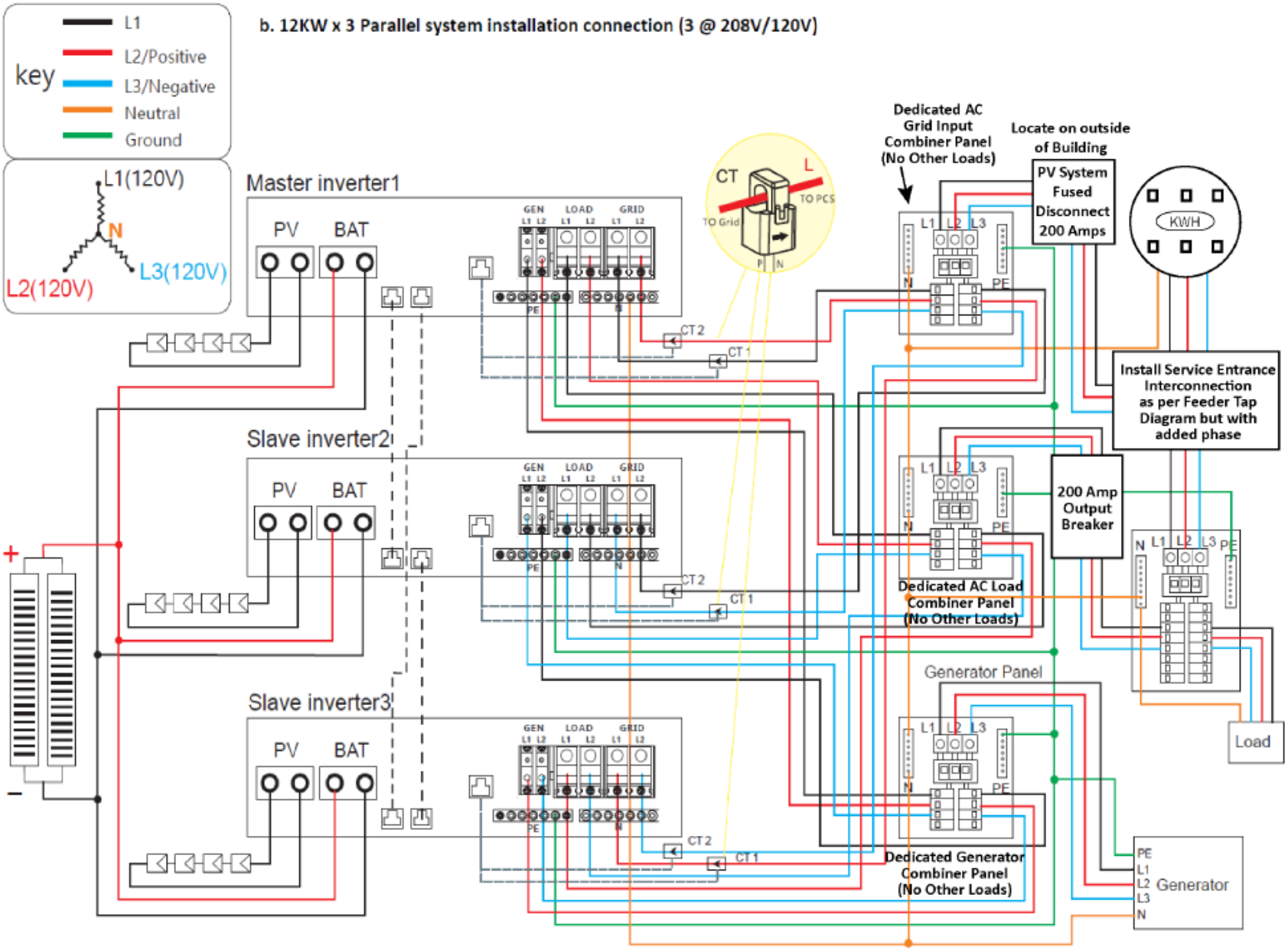

Inverter settings for (b.)

Grid type setting for each inverter

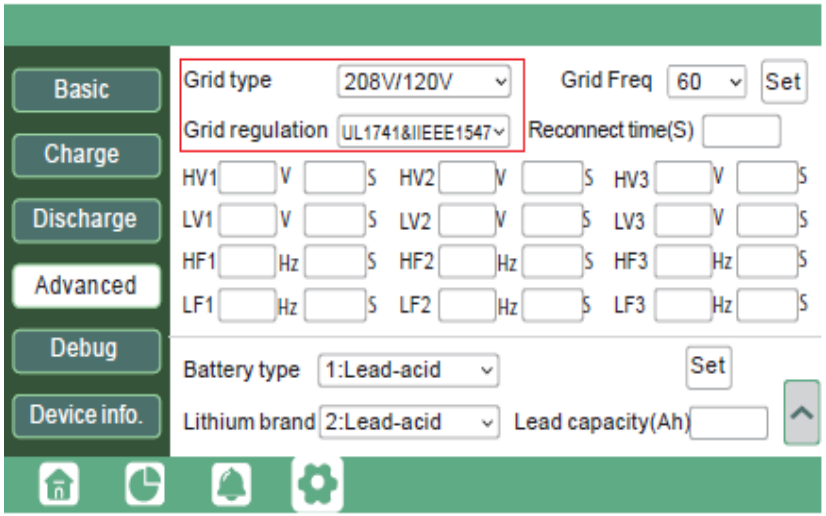

Inverter 1 settings

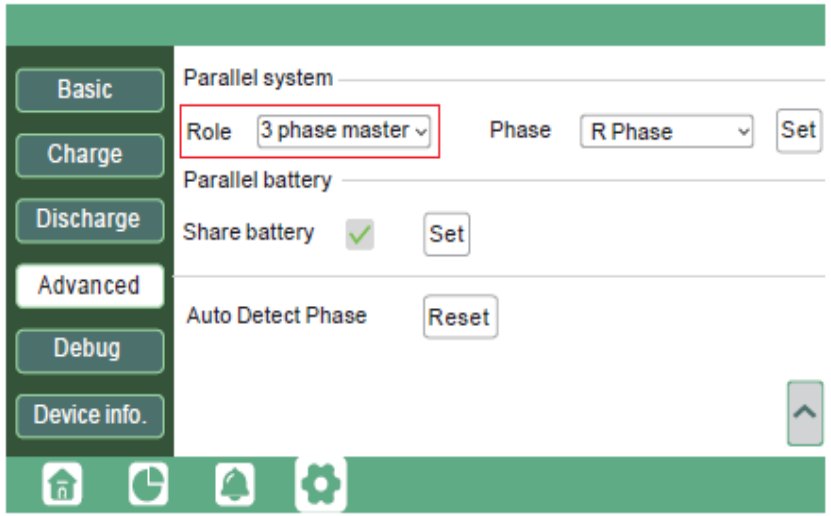

Inverter 2 settings

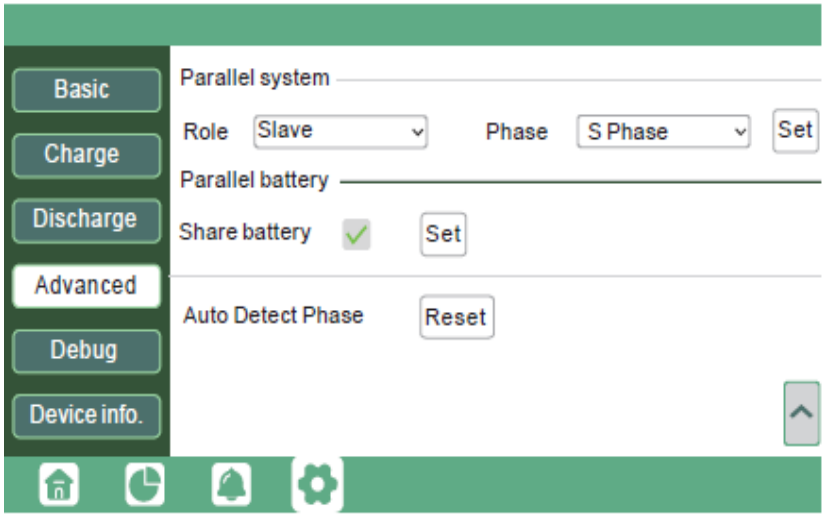

Inverter 3 settings

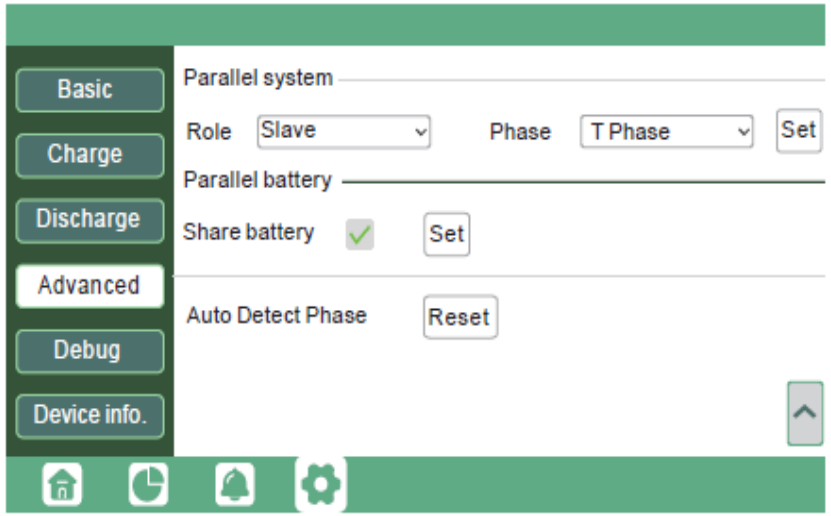

c. 12KW x 2 Parallel system installation connection (2 @ 208V/120V)

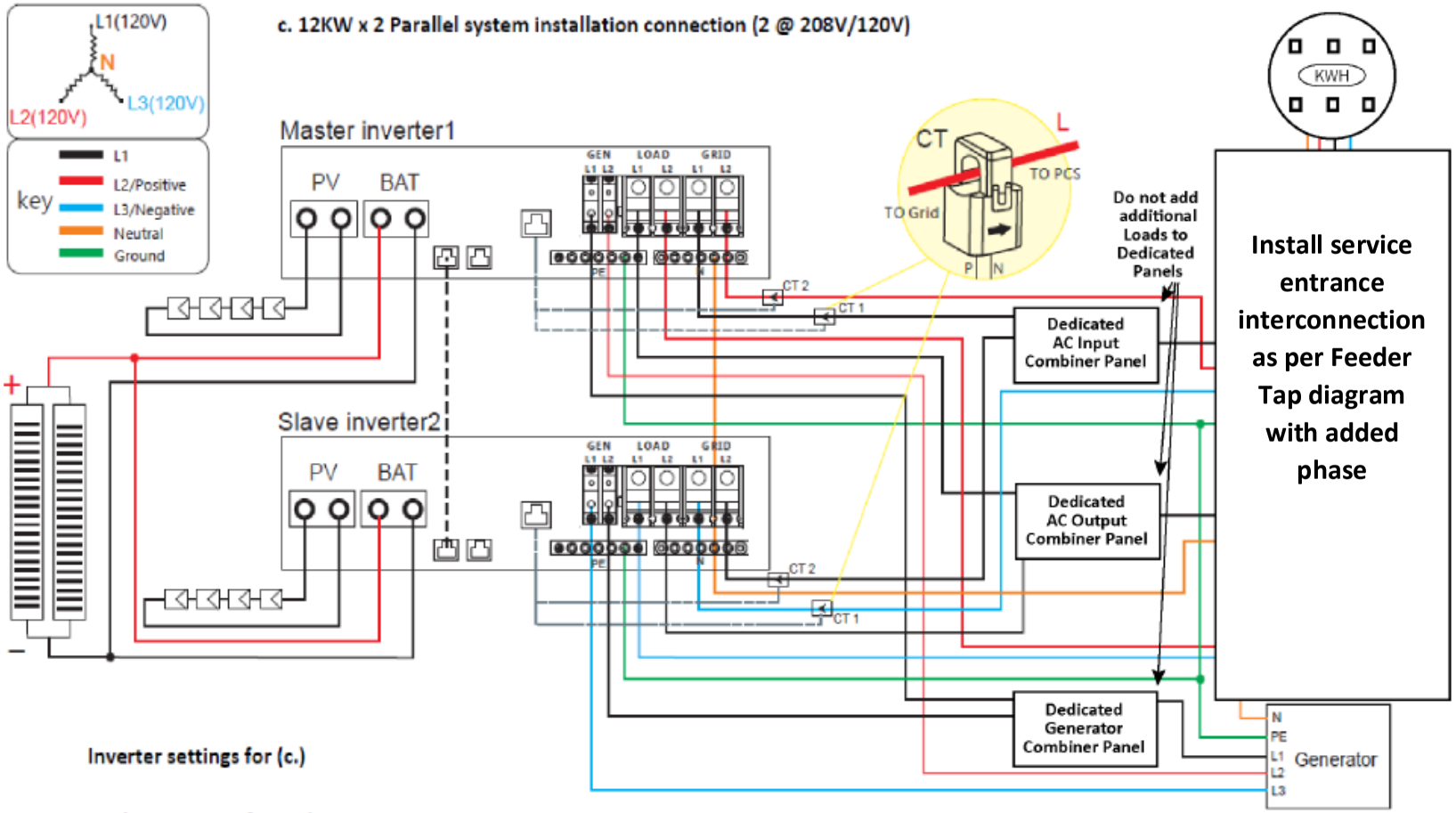

Inverter settings for (c.)

Grid type setting for each inverter

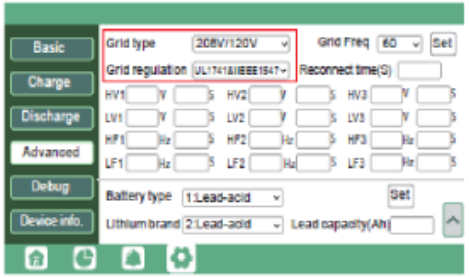

Inverter 1 settings

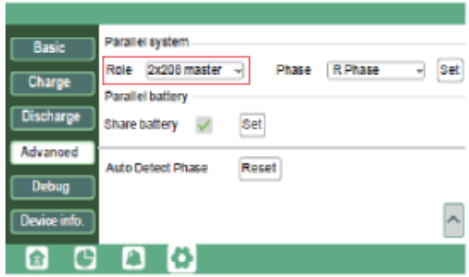

Inverter 2 settings

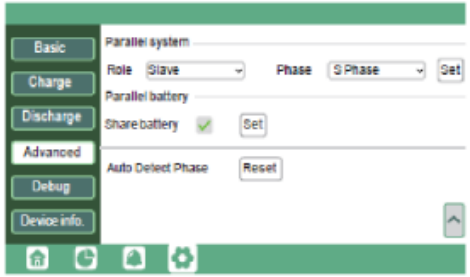

d. 12KW x 2 Parallel system installation connection (2 @ 240V/120V)

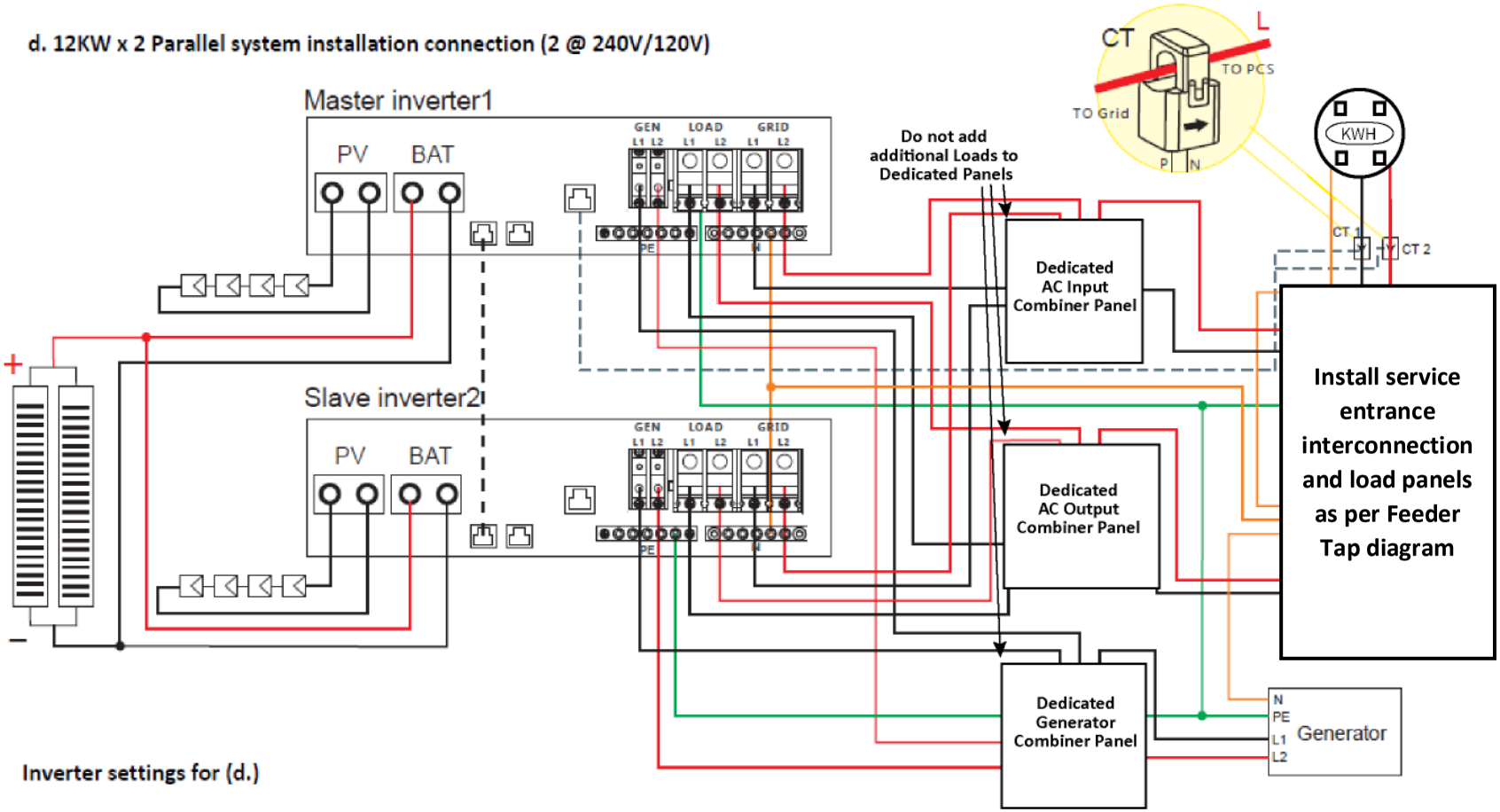

Inverter settings for (d.)

Grid type setting for each inverter

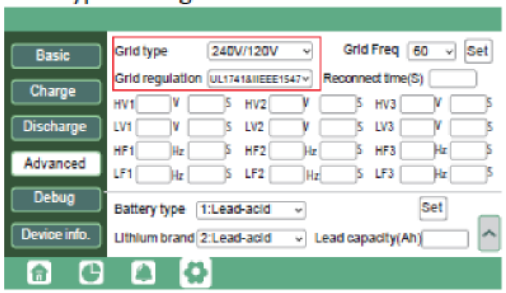

Inverter 1 settings

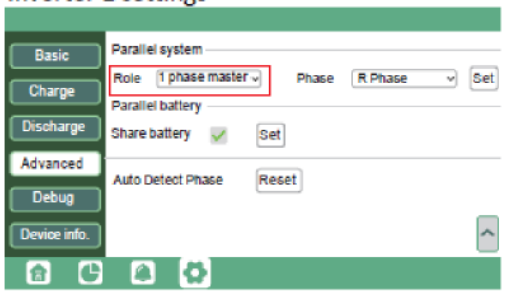

Inverter 2 settings

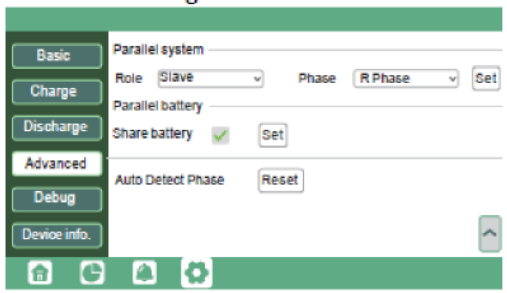

Remember!

Put the CAN communication PIN to ON status for the first and the last inverter.

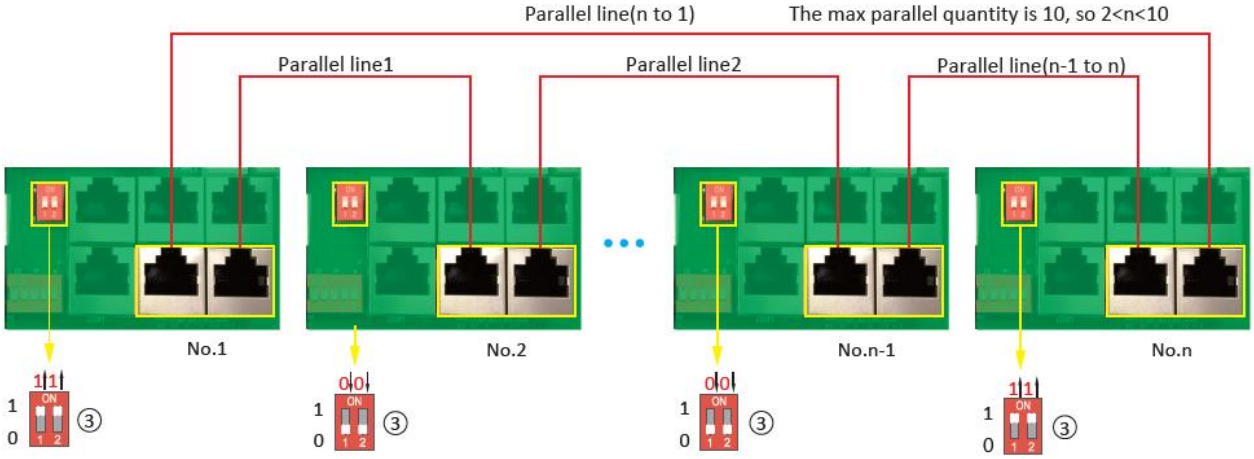

Please contact your inverter supplier for more detailed guidance on paralleling a system.

3.9.2 Parallel Information Display

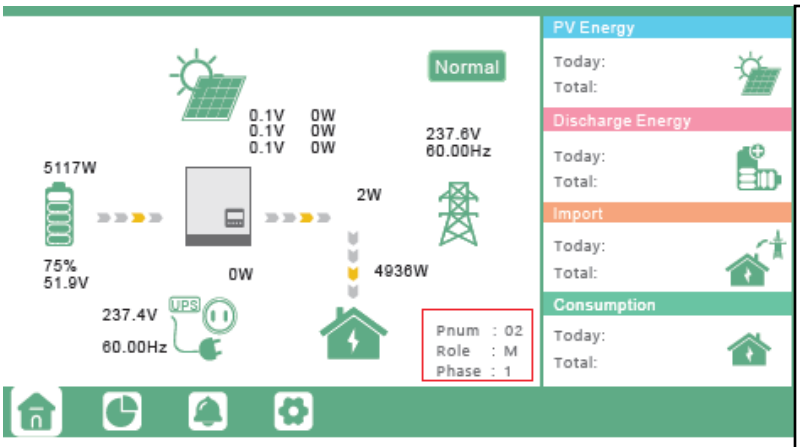

The information in the red box shows the parallel information:

- **Pnum**: 01 – 10
  a. Display number of parallel units
- **Role**: M or S:
  a. M means Master
  b. S means Slave
- **Phase**: 1 – 3:
  a. 1: R Phase
  b. 2: S Phase
  c. 3: T Phase

Important

Notices for parallel system:

- ✓ Ensure that the generator is connected to all inverters in parallel (if available).
- ✓ If you cannot divide the number of PV panels connected to each inverter, it is recommended to have more PV panels on the master inverter.
- ✓ The values shown on the LCD of each inverter represent the inverter's contribution to the system, ***not the system's total.***

3.9.3 Parallel Configuration

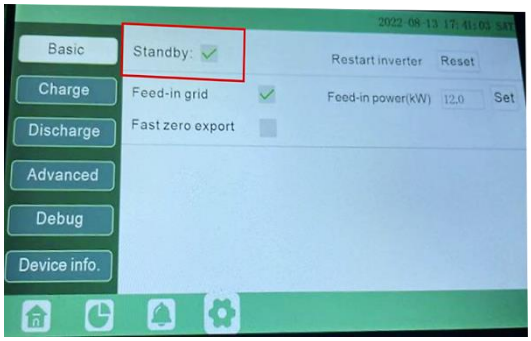

Before commissioning:

1. Verify that all the inverters are updated to the latest firmware. Please contact your distributor to confirm you have the latest version.
2. Make sure the power cables and parallel communications cables have been wired correctly and verify the DIP switch configurations are correct.
3. Power on the inverters and set them to standby via the ***"Basic"*** page in the settings.
4. Verify that the inverter status is ***"0".***
5. Select which unit you want as the master by selecting *"1 phase master"* in Advanced settings. Set the others as *"Slave".*
6. Ensure all inverters are set to R phase.
7. Enable Share battery on all inverters and ensure the communication cable from the battery is connected to the master unit.

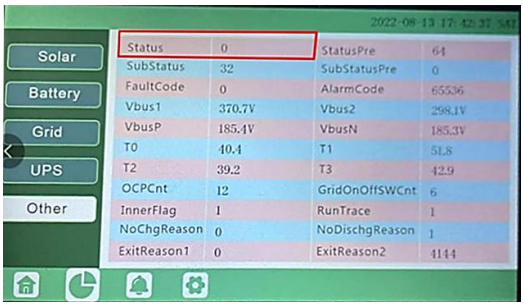

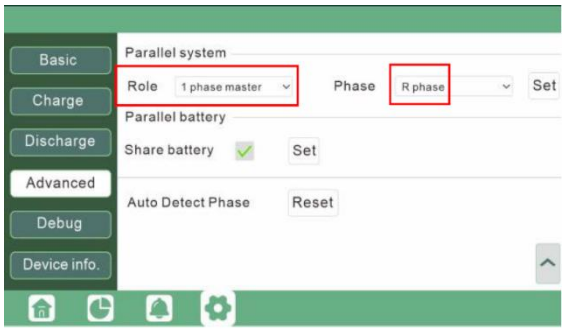

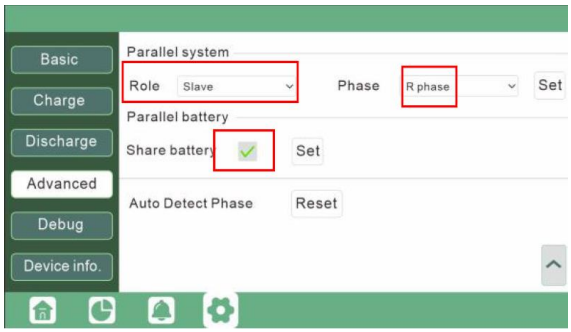

Important

Make sure the safety standard and grid type configurations are consistent. *(See image on right)*

Commisioning Steps:

1. Turn on the battery and make sure the communication works on all units.
2. Check the parallel info via the Home page.
3. Turn on the *"Off-grid output"* function in the *"Advanced"* page.
4. Before connecting load to EPS output, check the EPS output of L1 and L2, and L1 and N.
5. Add some small loads to EPS output and verify power output.
6. Finish the commisioning.

3.10 Monitor System Setup

3.10.1 Wi-Fi/4G Dongle Connection

A Wi-Fi/4G dongle can be used to monitor the inverter and remotely view the monitoring data on a computer or smart phone.

View data on smart phone:

A QR code with a link to our website with installation steps can be found on the side of the inverter.

Or visit our downloads page at www.eg4electronics.com for more information.

3.10.2 Third-Party RS485 Communication

Meters 485B and 485A can be used when a meter is not connected. These two pins can be used to communicate with the inverter using the RS485 Modbus protocol.

INV485: This interface is shared with the Wi-Fi module. If the Wi-Fi module is not in use, this interface can be used to communicate with the inverter.

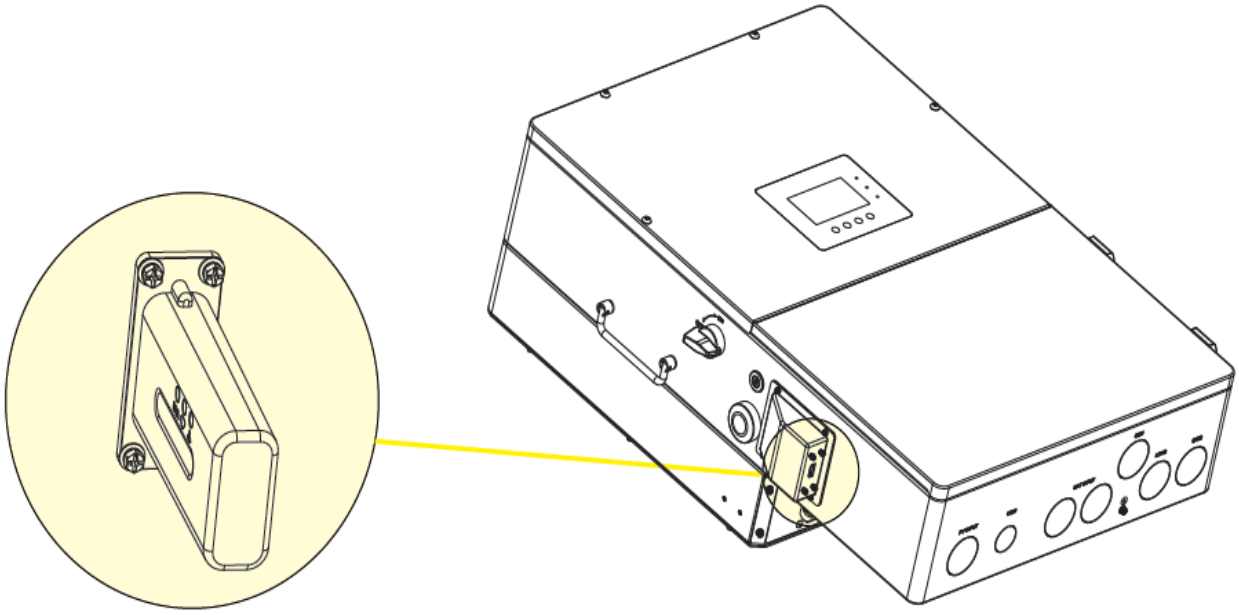

Please contact your distributor to get the Modbus protocol for third-party app development.

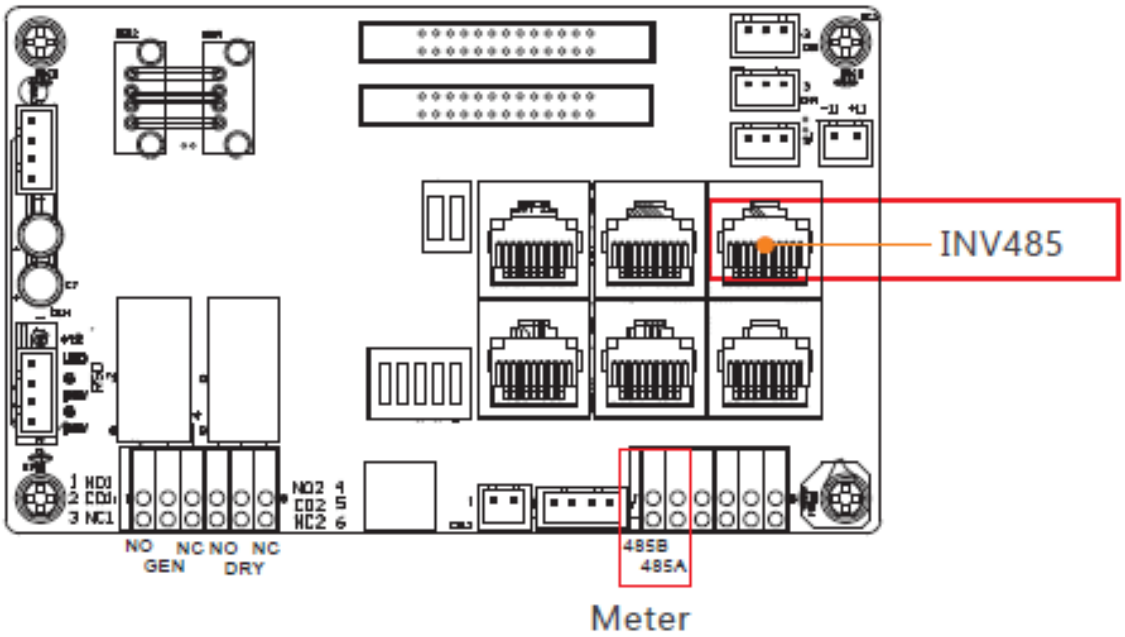

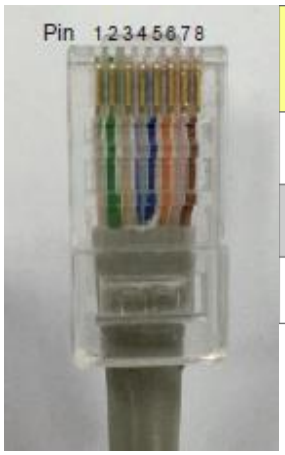

Pin	Description
1	RS485B
2	RS485A
3 – 8	/

3.11 Online Monitoring System User Interface

Create an account by registering at https://monitor.eg4electronics.com/.

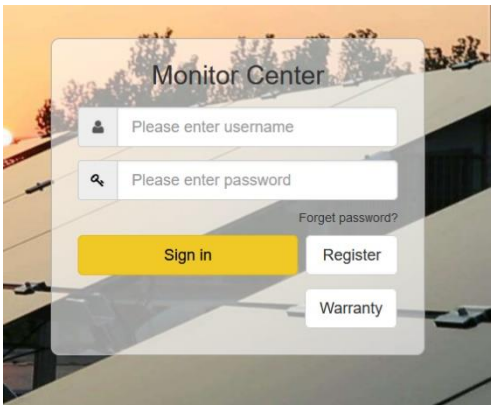

Note:

The monitoring system may change due to updates, so if you find the following UI descriptions vary from the following images. If you have any questions, or to create distributor or installer accounts, please contact support@eg4electronics.com for assistance.

3.11.1 Using the Web interface to set your Wi-Fi password.

1. Power on the inverter and connect your mobile phone or laptop to the hotspot after the INV LED on the Wi-Fi module is solid on. The name of the hotspot is the same as the SN on the Wi-Fi dongle shell. *(See image on right)*

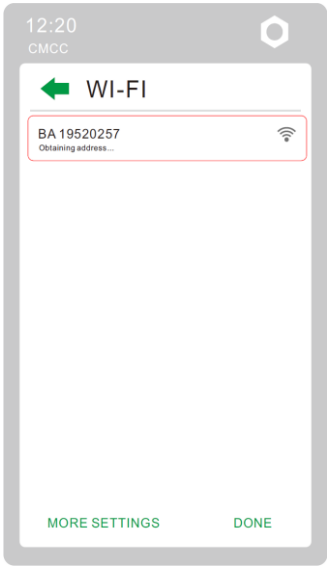

2. Enter 10.10.10.1 in your browser window. The username and password are both "admin" for this dialog box. After logging in, select English on the right side. *(See images below)*

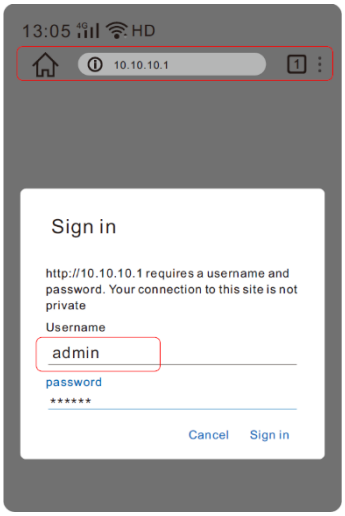

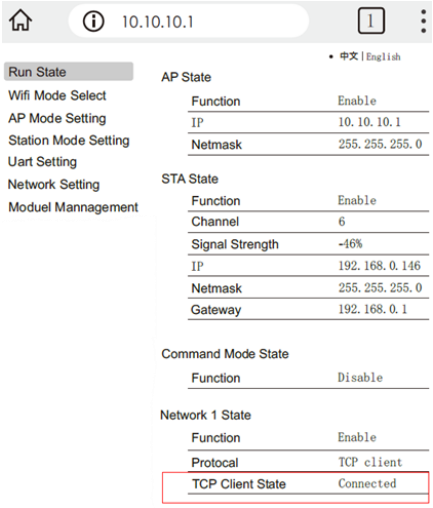

3. Go to the “Station Mode Setting” page. Click "Scan."

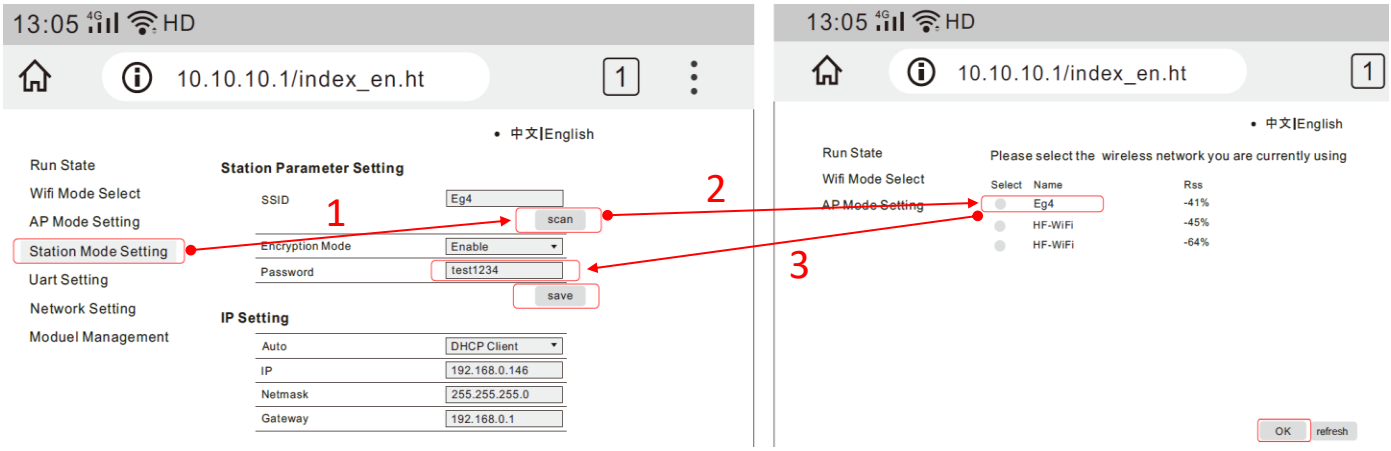

4. Select the Wi-Fi network you want to connect to and the click “OK.” Input the Wi-Fi password and click “Save.”

5. After saving your settings, the dongle will restart. After you set the password, three lights will be solid on, which means the inverter is connected to the server. You can now input your account login and password to begin monitoring your system.

3.11.2 Dashboard (Monitor tab)

Once your account is created, log in and you will be brought to the main page (Monitor tab) of the monitoring interface.

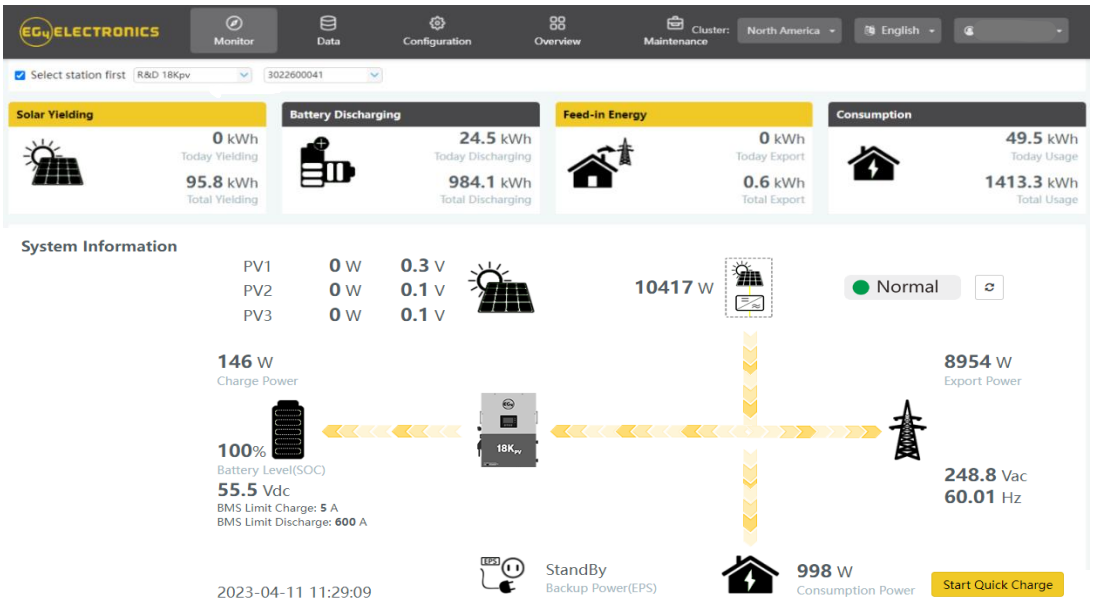

Name	Description
Select station first	Select which station to view, and then select which unit/dongle to view by choosing a serial number from the dropdown list. **Note:** Unchecking the box will only display serial numbers linked to the account.
Solar Yielding	Shows power generated by the solar panels (for AC coupled inverters it shows the power generated by the on-grid inverter). The PV CT clamp will have to be installed to be able to show the data correctly. When the picture of the solar yielding is clicked, it will display how the solar energy has been used that day. A second click will show the totals since commissioning.
Battery Discharging/Charging	Shows the charge and discharge energy from the battery/batteries. When the battery picture is clicked, the display will switch between battery discharging and battery charging, showing totals for that day and since commissioning.
Feed-in Energy/Import	Shows energy exported to grid for that day and since commissioning. When the picture is clicked, it shows energy imported from the grid for that day and since commissioning.
Consumption	Shows the total energy consumption of the property for that day and since commissioning.
System information	Displays power sources and energy flow, voltages and amperages from lines to loads. Clicking the button beside the status will refresh the information to reflect real time data. **Note:** When the battery's color is yellow or red it means there is a warning or fault with the battery.
Start Quick Charge	Clicking this will direct the inverter to charge batteries faster for **one hour.** Then it will return to back to its original setting.
Cluster	***North America*** – Clicking this will allow you to change the country. ***English*** – Clicking this will allow you to change the language of the page. ***(Username)*** – Clicking this will open a list with User Center (used for editing your profile), Modify password (used to change your password), and Logout (to logout of this account)

Dashboard continued…

Name	Description
Input & Output Power	This chart shows the power curve for each day, including solar power, battery charge/discharge power and grid import/export power and consumption. Hovering over an item name will highlight it in the chart. Clicking it will remove it from the list.
Energy Overview	This chart shows energy production and consumption for each day, including solar production, battery, grid export and consumption. Hovering over an item name will highlight it in the chart. Clicking it will remove it from the list. Selecting 'Month' will show the energy statistics for each day. Selecting 'Year' will show energy for each month. Selecting 'Total' will show energy for each year.

3.11.3 Data tab

Data view displays additional in-depth running data, including technical details for PV, battery, grid, and EPS, that is helpful for analysis and maintenance.

Five categories make up the data view: "Chart," "Energy," "Historical data," "Local data," and "History event." For more details on each component, please see the following sections.

Chart

Chart shows how key parameters of “PV side”, “Battery”, “AC Side” and “EPS” change over time over a 24 period.

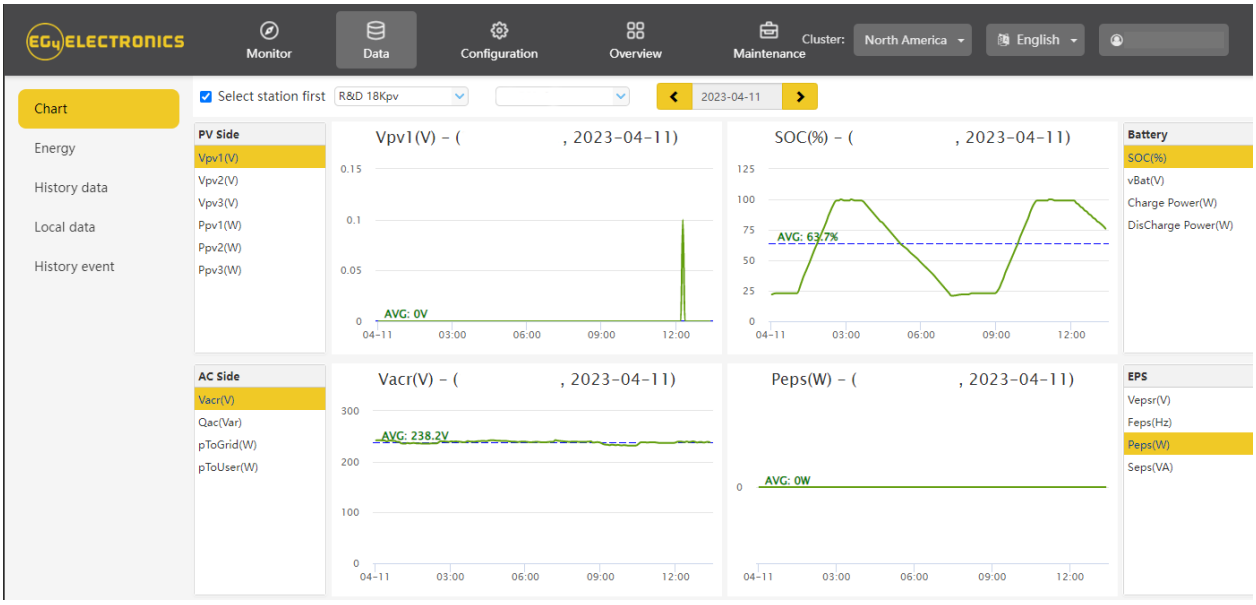

Name	Description
Vpv	Voltage of solar input (“V” stands for volts, lower-case “pv” stands for PV)
Ppv	Power of solar input (first letter “P”, lower-case “pv” stands for PV)
SOC(%)	Battery/batteries state of charge.
Vacr	Voltage of AC output (“V” stands for voltage, “ac” for AC, and “r” for phase R)
Qac	Reactive power of AC output (“Q” stands for reactive power)
Vepsr	Rated voltage of EPS (Emergency Power Supply)
Feps	Frequency of EPS
Peps	Output power of EPS
Seps	Apparent power of EPS (first letter “S” stands for apparent power)
pToGrid	Power feed into grid

Energy

"Energy" tab shows how energy (y-axis) changes with time, daily, by date (x-axis) in one month.

- Selecting 'Month' will show the energy statistics for each day.
- Selecting 'Year' will show energy for each month.
- Selecting 'Total' will show energy for each year.

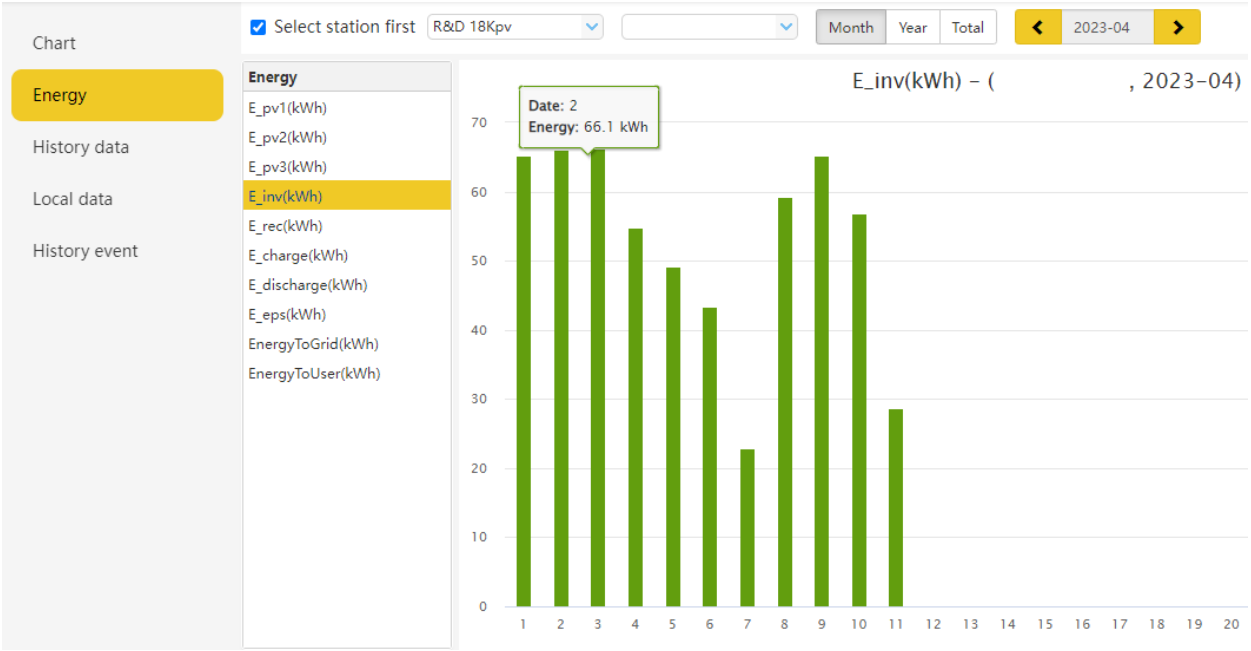

Name	Description
E_pv1(kWh)	Energy generated by PV string 1
E_pv2(kWh)	Energy generated by PV string 2
E_inv(kWh)	Energy output via AC output
E_rec(kWh)	Energy of AC charge
E_charge(kWh)	Energy used for battery charge
E_discharge(kWh)	Energy output by battery discharging
E_eps(kWh)	Energy output via EPS
EnergyToGrid(kWh)	Feed-in energy
EnergyToUser(kWh)	Energy import from grid

History Data

The measured technical characteristics of PV, battery, EPS, and Grid are listed under "Historical data" for users or their distributor's examination to promptly address any potential issues.

Advanced technical knowledge is necessary to properly comprehend this table. End users are advised to concentrate solely on the "Monitor" view, "Chart" and "Energy" sections as these only offer simple to comprehend performance data.

Helpful Tip:

Data can be exported to an Excel file to provide your distributor for technical support. Distributors can then analyze the following factors in order to perform quick troubleshooting for their end users:

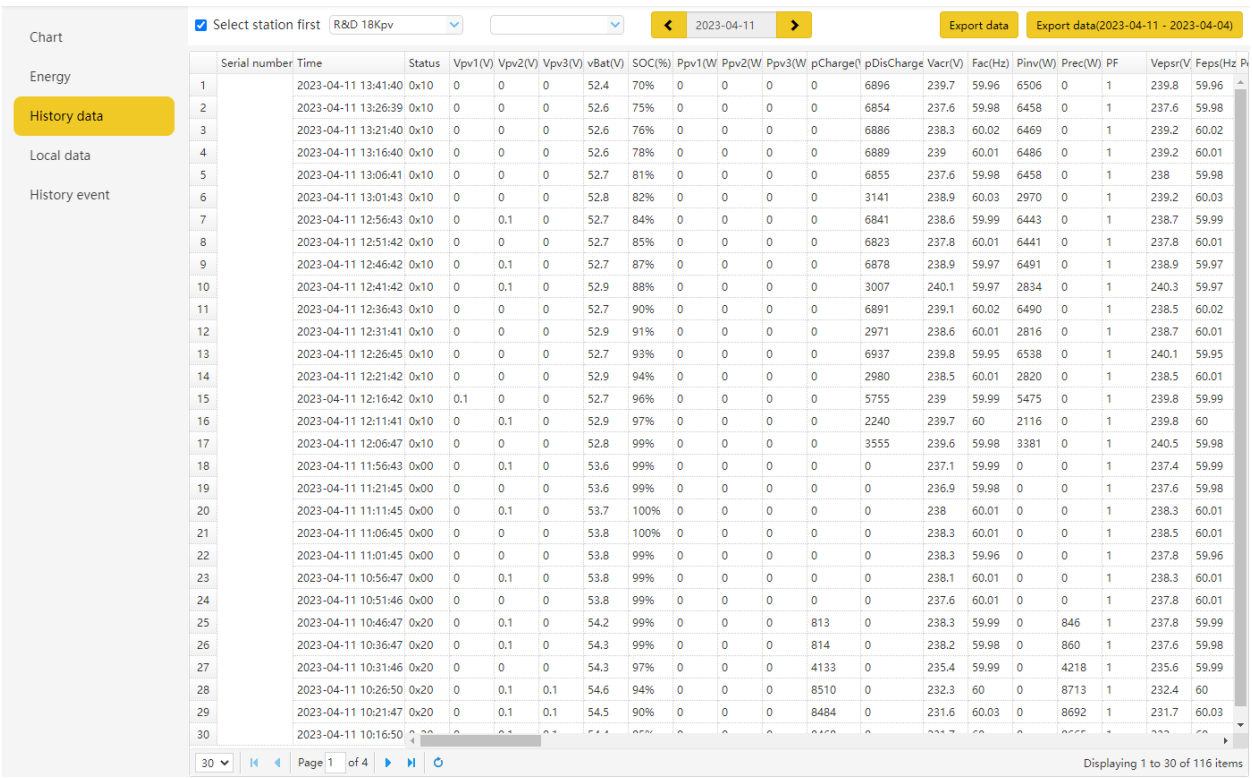

Serial number	Time	Status	Vpv1(V)	Vpv2(V)	Vpv3(V)	vBat(V)	SOC(%)	Ppv1(W	Ppv2(W	Ppv3(W	pCharge(\	pDisCharge	Vacr(V)	Fac(Hz)	Pinv(W)	Prec(W)	PF	Vepsr(V	Feps(Hz	P
1	2023-04-11 13:41:40	0x10	0	0	0	52.4	70%	0	0	0	0	6896	239.7	59.96	6506	0	1	239.8	59.96	
2	2023-04-11 13:26:39	0x10	0	0	0	52.6	75%	0	0	0	0	6854	237.6	59.98	6458	0	1	237.6	59.98	
3	2023-04-11 13:21:40	0x10	0	0	0	52.6	76%	0	0	0	0	6886	238.3	60.02	6469	0	1	239.2	60.02	
4	2023-04-11 13:16:40	0x10	0	0	0	52.6	78%	0	0	0	0	6889	239	60.01	6486	0	1	239.2	60.01	
5	2023-04-11 13:06:41	0x10	0	0	0	52.7	81%	0	0	0	0	6855	237.6	59.98	6458	0	1	238	59.98	
6	2023-04-11 13:01:43	0x10	0	0	0	52.8	82%	0	0	0	0	3141	238.9	60.03	2970	0	1	239.2	60.03	
7	2023-04-11 12:56:43	0x10	0	0.1	0	52.7	84%	0	0	0	0	6841	238.6	59.99	6443	0	1	238.7	59.99	
8	2023-04-11 12:51:42	0x10	0	0	0	52.7	85%	0	0	0	0	6823	237.8	60.01	6441	0	1	237.8	60.01	
9	2023-04-11 12:46:42	0x10	0	0.1	0	52.7	87%	0	0	0	0	6878	238.9	59.97	6491	0	1	238.9	59.97	
10	2023-04-11 12:41:42	0x10	0	0.1	0	52.9	88%	0	0	0	0	3007	240.1	59.97	2834	0	1	240.3	59.97	
11	2023-04-11 12:36:43	0x10	0	0	0	52.7	90%	0	0	0	0	6891	239.1	60.02	6490	0	1	238.5	60.02	
12	2023-04-11 12:31:41	0x10	0	0	0	52.9	91%	0	0	0	0	2971	238.6	60.01	2816	0	1	238.7	60.01	
13	2023-04-11 12:26:45	0x10	0	0	0	52.7	93%	0	0	0	0	6937	239.8	59.95	6538	0	1	240.1	59.95	
14	2023-04-11 12:21:42	0x10	0	0	0	52.9	94%	0	0	0	0	2980	238.5	60.01	2820	0	1	238.5	60.01	
15	2023-04-11 12:16:42	0x10	0.1	0	0	52.7	96%	0	0	0	0	5755	239	59.99	5475	0	1	239.8	59.99	
16	2023-04-11 12:11:41	0x10	0	0.1	0	52.9	97%	0	0	0	0	2240	239.7	60	2116	0	1	239.8	60	
17	2023-04-11 12:06:47	0x10	0	0	0	52.8	99%	0	0	0	0	3555	239.6	59.98	3381	0	1	240.5	59.98	
18	2023-04-11 11:56:43	0x00	0	0.1	0	53.6	99%	0	0	0	0	0	237.1	59.99	0	0	1	237.4	59.99	
19	2023-04-11 11:21:45	0x00	0	0	0	53.6	99%	0	0	0	0	0	236.9	59.98	0	0	1	237.6	59.98	
20	2023-04-11 11:11:45	0x00	0	0.1	0	53.7	100%	0	0	0	0	0	238	60.01	0	0	1	238.3	60.01	
21	2023-04-11 11:06:45	0x00	0	0	0	53.8	100%	0	0	0	0	0	238.3	60.01	0	0	1	238.5	60.01	
22	2023-04-11 11:01:45	0x00	0	0	0	53.8	99%	0	0	0	0	0	238.3	59.96	0	0	1	237.8	59.96	
23	2023-04-11 10:56:47	0x00	0	0.1	0	53.8	99%	0	0	0	0	0	238.1	60.01	0	0	1	238.3	60.01	
24	2023-04-11 10:51:46	0x00	0	0	0	53.8	99%	0	0	0	0	0	237.6	60.01	0	0	1	237.8	60.01	
25	2023-04-11 10:46:47	0x20	0	0.1	0	54.2	99%	0	0	0	813	0	238.3	59.99	0	846	1	237.8	59.99	
26	2023-04-11 10:36:47	0x20	0	0.1	0	54.3	99%	0	0	0	814	0	238.2	59.98	0	860	1	237.6	59.98	
27	2023-04-11 10:31:46	0x20	0	0	0	54.3	97%	0	0	0	4133	0	235.4	59.99	0	4218	1	235.6	59.99	
28	2023-04-11 10:26:50	0x20	0	0.1	0.1	54.6	94%	0	0	0	8510	0	232.3	60	0	8713	1	232.4	60	
29	2023-04-11 10:21:47	0x20	0	0.1	0.1	54.5	90%	0	0	0	8484	0	231.6	60.03	0	8692	1	231.7	60.03	
30	2023-04-11 10:16:50	[illegible]	[illegible]	[illegible]	[illegible]	[illegible]	[illegible]	[illegible]	[illegible]	[illegible]	[illegible]	[illegible]	[illegible]	[illegible]	[illegible]	[illegible]	[illegible]	[illegible]	[illegible]	

Name	Description
PtoGrid/PtoUser	To check if CT was connected correctly
Vpv/Ppv	To check the MPPT
Vo/Po/So	To check the load type and if there is an overload when in EPS mode
Vb/SOC	To check the current state of charge and if the battery is overcharged or overly discharged.
Vac/Fac	To evaluate Grid performance and to check if working voltage and frequency range is adjusted to comply with grid
E-xxday	To evaluate energy distribution
E-xxall	To check if the system is working well under off grid mode)

Local Data

The data captured during the offline periods are displayed in the "Local data" section (loss of Internet or Wi-Fi). The only distinction from “History data” is that it is used for offline data recording.

Local data is recorded while the system is offline for more than 20 minutes and is taken every 5 minutes. Data can be stored in the system for a maximum of 90 days.

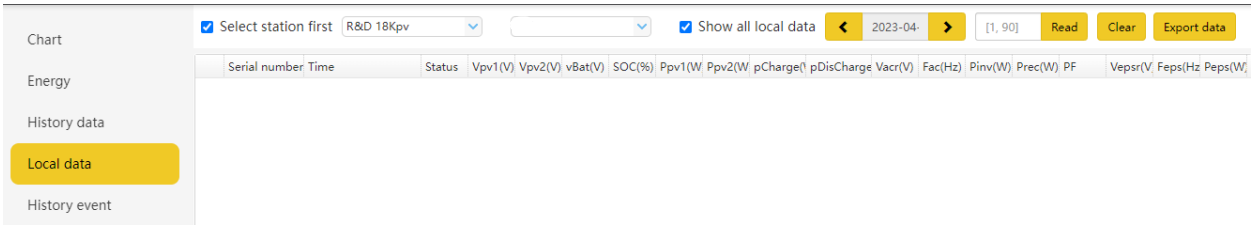

History Event

The "History Event" section displays a timeline of events. (Notice and Fault events)

If there isn't a record of a "historical event," the hybrid inverter is properly connected and working without any issues.

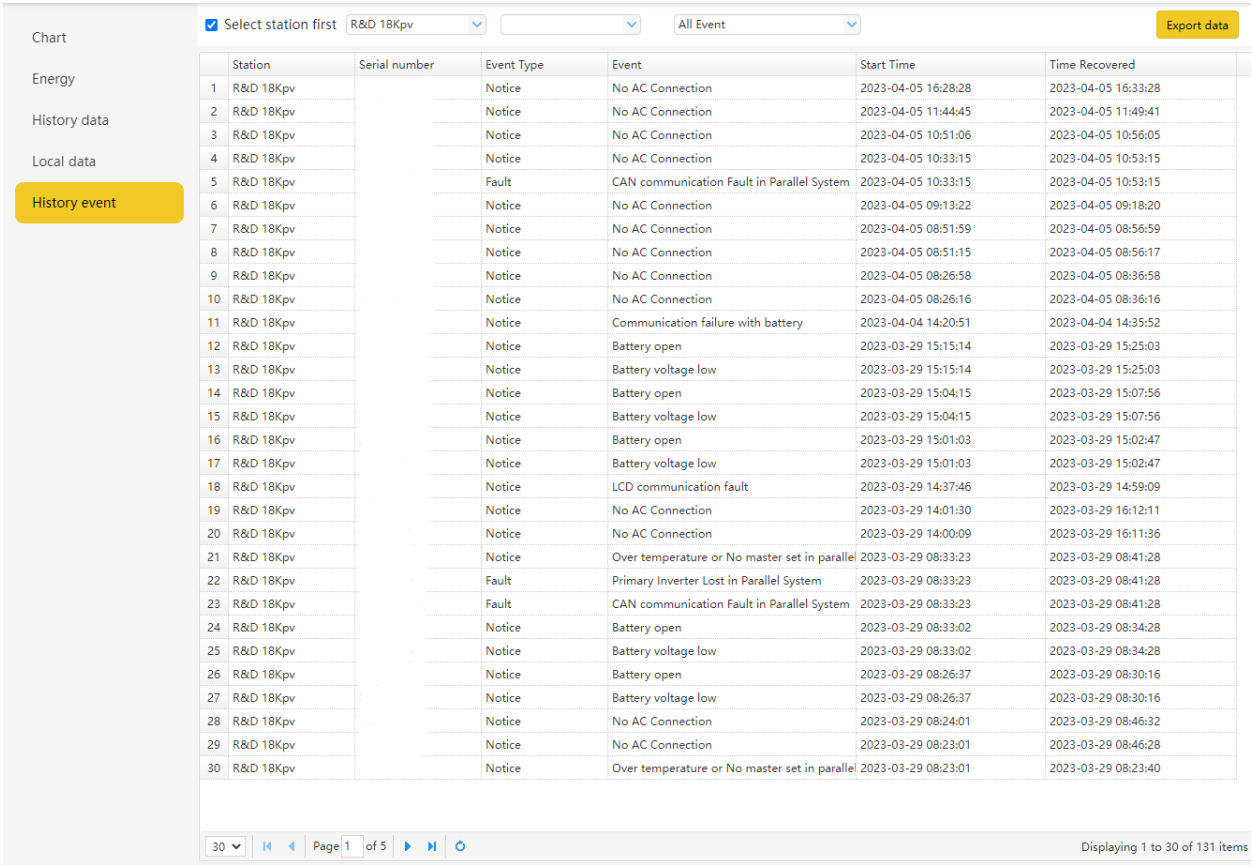

	Station	Serial number	Event Type	Event	Start Time	Time Recovered
1	R&D 18Kpv		Notice	No AC Connection	2023-04-05 16:28:28	2023-04-05 16:33:28
2	R&D 18Kpv		Notice	No AC Connection	2023-04-05 11:44:45	2023-04-05 11:49:41
3	R&D 18Kpv		Notice	No AC Connection	2023-04-05 10:51:06	2023-04-05 10:56:05
4	R&D 18Kpv		Notice	No AC Connection	2023-04-05 10:33:15	2023-04-05 10:53:15
5	R&D 18Kpv		Fault	CAN communication Fault in Parallel System	2023-04-05 10:33:15	2023-04-05 10:53:15
6	R&D 18Kpv		Notice	No AC Connection	2023-04-05 09:13:22	2023-04-05 09:18:20
7	R&D 18Kpv		Notice	No AC Connection	2023-04-05 08:51:59	2023-04-05 08:56:59
8	R&D 18Kpv		Notice	No AC Connection	2023-04-05 08:51:15	2023-04-05 08:56:17
9	R&D 18Kpv		Notice	No AC Connection	2023-04-05 08:26:58	2023-04-05 08:36:58
10	R&D 18Kpv		Notice	No AC Connection	2023-04-05 08:26:16	2023-04-05 08:36:16
11	R&D 18Kpv		Notice	Communication failure with battery	2023-04-04 14:20:51	2023-04-04 14:35:52
12	R&D 18Kpv		Notice	Battery open	2023-03-29 15:15:14	2023-03-29 15:25:03
13	R&D 18Kpv		Notice	Battery voltage low	2023-03-29 15:15:14	2023-03-29 15:25:03
14	R&D 18Kpv		Notice	Battery open	2023-03-29 15:04:15	2023-03-29 15:07:56
15	R&D 18Kpv		Notice	Battery voltage low	2023-03-29 15:04:15	2023-03-29 15:07:56
16	R&D 18Kpv		Notice	Battery open	2023-03-29 15:01:03	2023-03-29 15:02:47
17	R&D 18Kpv		Notice	Battery voltage low	2023-03-29 15:01:03	2023-03-29 15:02:47
18	R&D 18Kpv		Notice	LCD communication fault	2023-03-29 14:37:46	2023-03-29 14:59:09
19	R&D 18Kpv		Notice	No AC Connection	2023-03-29 14:01:30	2023-03-29 16:12:11
20	R&D 18Kpv		Notice	No AC Connection	2023-03-29 14:00:09	2023-03-29 16:11:36
21	R&D 18Kpv		Notice	Over temperature or No master set in parallel	2023-03-29 08:33:23	2023-03-29 08:41:28
22	R&D 18Kpv		Fault	Primary Inverter Lost in Parallel System	2023-03-29 08:33:23	2023-03-29 08:41:28
23	R&D 18Kpv		Fault	CAN communication Fault in Parallel System	2023-03-29 08:33:23	2023-03-29 08:41:28
24	R&D 18Kpv		Notice	Battery open	2023-03-29 08:33:02	2023-03-29 08:34:28
25	R&D 18Kpv		Notice	Battery voltage low	2023-03-29 08:33:02	2023-03-29 08:34:28
26	R&D 18Kpv		Notice	Battery open	2023-03-29 08:26:37	2023-03-29 08:30:16
27	R&D 18Kpv		Notice	Battery voltage low	2023-03-29 08:26:37	2023-03-29 08:30:16
28	R&D 18Kpv		Notice	No AC Connection	2023-03-29 08:24:01	2023-03-29 08:46:32
29	R&D 18Kpv		Notice	No AC Connection	2023-03-29 08:23:01	2023-03-29 08:46:28
30	R&D 18Kpv		Notice	Over temperature or No master set in parallel	2023-03-29 08:23:01	2023-03-29 08:23:40

3.11.4 Configuration Tab

The “Configuration” page is used for users to manage their station, dataloggers and user information.

Stations

This tab will show all stations linked to your account. Clicking on a station name will display all inverters under that station or location.

Clicking the Add Station button creates another site if you have more than one station under the same account. This is useful for distributors who have multiple customers that would like assistance with monitoring/troubleshooting their inverters.

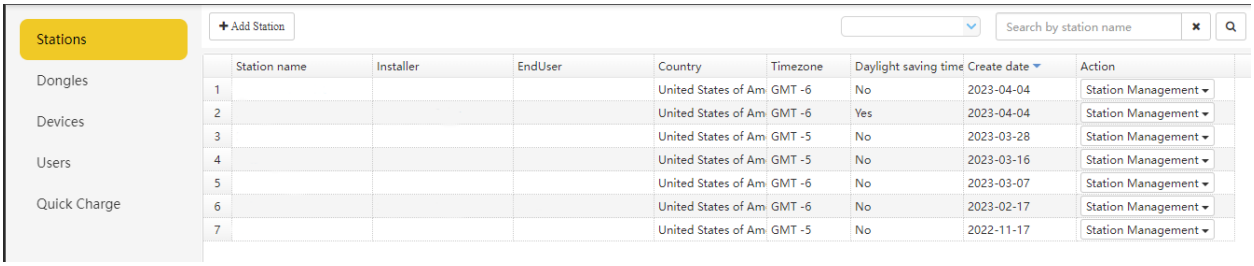

	Station name	Installer	EndUser	Country	Timezone	Daylight saving time	Create date	Action
1				United States of Am	GMT -6	No	2023-04-04	Station Management
2				United States of Am	GMT -6	Yes	2023-04-04	Station Management
3				United States of Am	GMT -5	No	2023-03-28	Station Management
4				United States of Am	GMT -5	No	2023-03-16	Station Management
5				United States of Am	GMT -6	No	2023-03-07	Station Management
6				United States of Am	GMT -6	No	2023-02-17	Station Management
7				United States of Am	GMT -5	No	2022-11-17	Station Management

Dongles

Users can add the datalogger Serial Number (SN) in the station if they have more than one inverter in the station. The inverter will be shown on the system immediately when powered on after adding the datalogger and configuring the proper password for the Wi-Fi datalogger. Dongles can also be searched by individual serial number.

Important

Before configuring the password for the Wi-Fi datalogger, please add the datalogger to the monitor system.

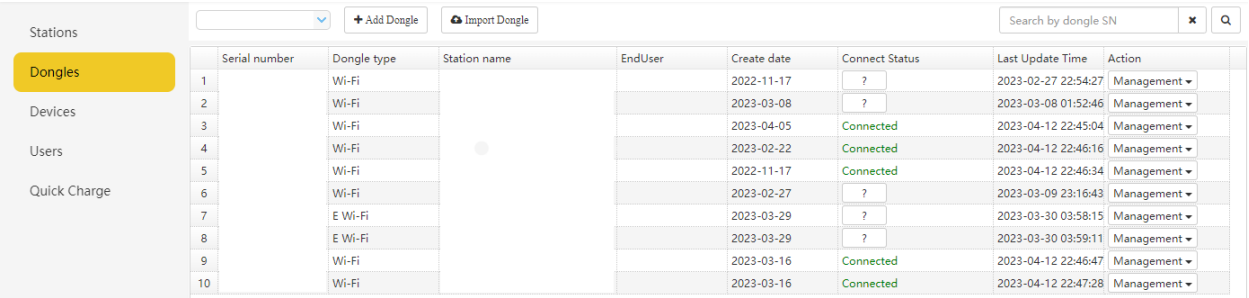

	Serial number	Dongle type	Station name	EndUser	Create date	Connect Status	Last Update Time	Action
1		Wi-Fi			2022-11-17	?	2023-02-27 22:54:27	Management
2		Wi-Fi			2023-03-08	?	2023-03-08 01:52:46	Management
3		Wi-Fi			2023-04-05	Connected	2023-04-12 22:45:04	Management
4		Wi-Fi			2023-02-22	Connected	2023-04-12 22:46:16	Management
5		Wi-Fi			2022-11-17	Connected	2023-04-12 22:46:34	Management
6		Wi-Fi			2023-02-27	?	2023-03-09 23:16:43	Management
7		E Wi-Fi			2023-03-29	?	2023-03-30 03:58:15	Management
8		E Wi-Fi			2023-03-29	?	2023-03-30 03:59:11	Management
9		Wi-Fi			2023-03-16	Connected	2023-04-12 22:46:47	Management
10		Wi-Fi			2023-03-16	Connected	2023-04-12 22:47:28	Management

Devices

Users can see the entire inverter list connected to the account and check if the inverter is online. Data can be exported to an Excel file for record keeping or to view specific inverter stats.

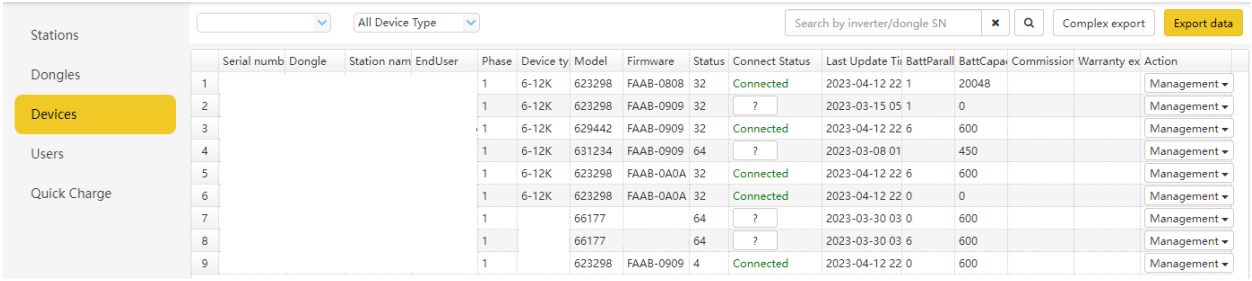

Users

This tab shows a full list of users, distributors and any other roles linked to the account.

End users can edit password and personal information in the user page. Distributors can add an installer account and end user account on this page.

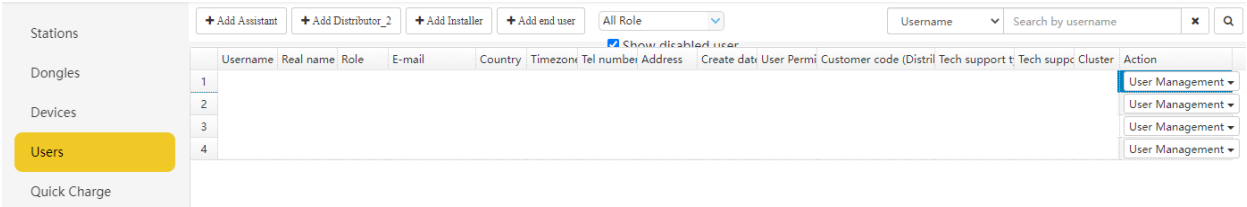

3.11.5 Overview

"Overview" allows EG4 or its distributors to quickly monitor system-wide data for their end users, such as solar yields, battery discharging, and other factors.

Station Overview

All the stations linked to the account can be found here. Clicking a station name will switch the main page to show the real time data.

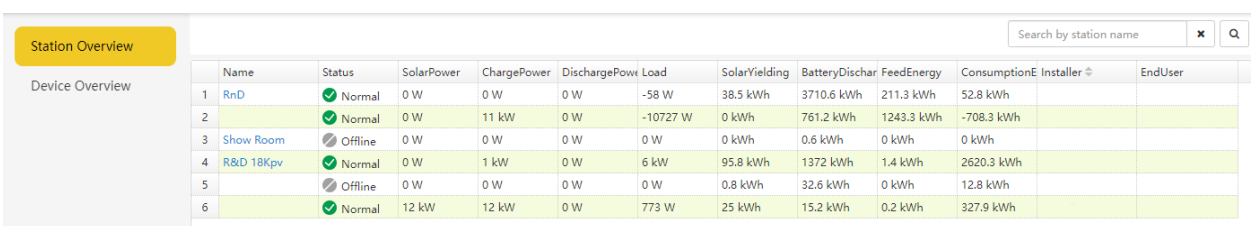

Device Overview

All the inverters linked to the account can be found here. Clicking a serial number will switch the main page to show the real time data for that inverter.

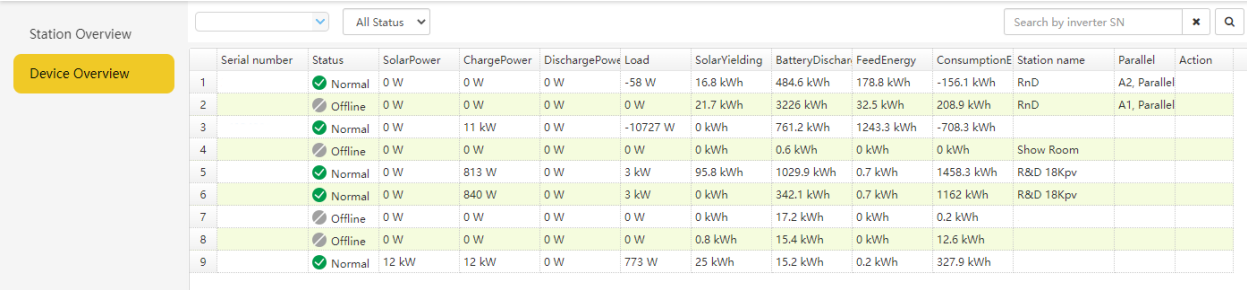

	Serial number	Status	SolarPower	ChargePower	DischargePowe	Load	SolarYielding	BatteryDischar	FeedEnergy	ConsumptionE	Station name	Parallel	Action
1		Normal	0 W	0 W	0 W	-58 W	16.8 kWh	484.6 kWh	178.8 kWh	-156.1 kWh	RnD	A2, Parallel	
2		Offline	0 W	0 W	0 W	0 W	21.7 kWh	3226 kWh	32.5 kWh	208.9 kWh	RnD	A1, Parallel	
3		Normal	0 W	11 kW	0 W	-10727 W	0 kWh	761.2 kWh	1243.3 kWh	-708.3 kWh			
4		Offline	0 W	0 W	0 W	0 W	0 kWh	0.6 kWh	0 kWh	0 kWh	Show Room		
5		Normal	0 W	813 W	0 W	3 kW	95.8 kWh	1029.9 kWh	0.7 kWh	1458.3 kWh	R&D 18Kpv		
6		Normal	0 W	840 W	0 W	3 kW	0 kWh	342.1 kWh	0.7 kWh	1162 kWh	R&D 18Kpv		
7		Offline	0 W	0 W	0 W	0 W	0 kWh	17.2 kWh	0 kWh	0.2 kWh			
8		Offline	0 W	0 W	0 W	0 W	0.8 kWh	15.4 kWh	0 kWh	12.6 kWh			
9		Normal	12 kW	12 kW	0 W	773 W	25 kWh	15.2 kWh	0.2 kWh	327.9 kWh			

3.11.6 Maintenance

The "Maintenance" view is used for firmware updates and to remotely change settings on your inverter by selecting a station and then an inverter serial number.

Distributors can manage all settings for all inverters at once with the help of the batch setting capability supported by EG4's monitor system.

Important

Advanced technical knowledge is necessary to properly make changes. End users will only be able to see the “Remote Set” tab to make changes to their inverter.

Remote Set

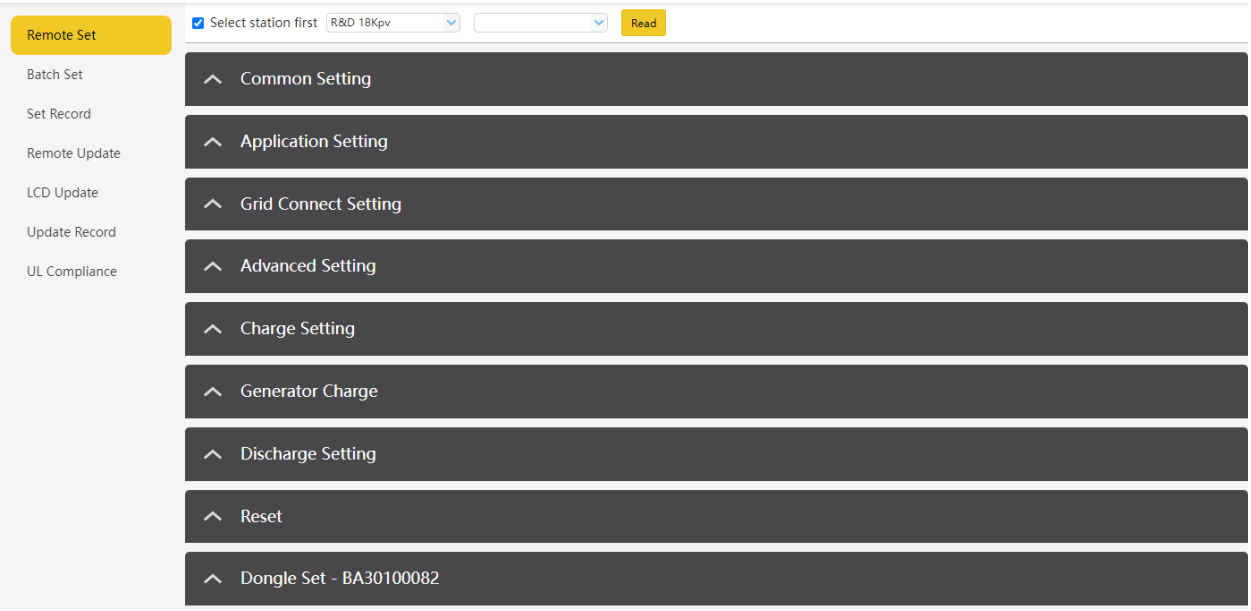

3.12 Smartphone App Setup

You need to register for a monitoring account and set the Wi-Fi password for the Wi-Fi dongle ***before*** using EG4's monitoring system.

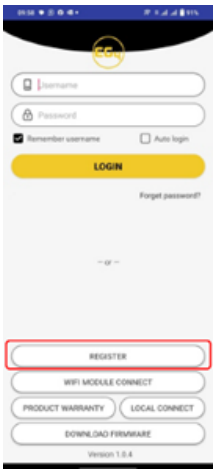

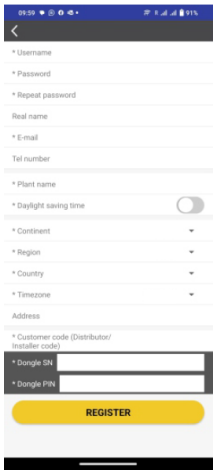

1. **Register your account**

   Visit https://monitor.eg4electronics.com/ or download the 'EG4 Monitor' app to register for an end-user account. Please contact support@eg4electronics.com for distributor or installer accounts.

2. **When registering the account, provide the following information:**

a. Customer code: This is the code for a distributor or installer. Please contact your distributor or installer to obtain this code.

b. Dongle SN: The serial number is attached to the Wi-Fi/LAN shell.

c. Dongle PIN: PIN is attached to the Wi-Fi/LAN shell below the SN.

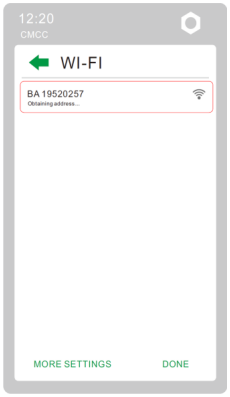

3. **Set your Wi-fi password**

a. Plug in the Wi-Fi dongle, and power on the inverter.

b. Wait until the INV LED on the Wi-Fi module is solid on, then connect your phone to the Wi-Fi hotspot. The hotspot name is the same as the Wi-Fi dongle serial number. *(See image on left)*

c. Open the app. Click on "WIFI MODULE CONNECT". Click the Yellow refresh button to display a list of available networks. Select your wireless network name and enter your password.

d. After clicking Home Wi-Fi Connect, the Wi-Fi dongle will reset. After you set the correct password, three lights will be solid on, which means the inverter is connected to the server. You can then return to the login page and input your account and password to begin monitoring your system.

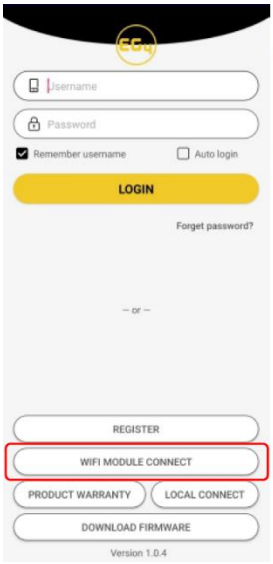

3.13 Local Monitoring Setup with the EG4 Monitor app

If there is no wi-Fi available at the location, you can use the local function to monitor or set up the system.

1. Download the EG4 Monitor app.
2. Connect your device to the Wi-Fi hotspot after the INV LED on the Wi-Fi module is solid on. The name of the hotspot is the same as the serial number on the Wi-Fi module shell.
3. Click “Local Connect.” You can now monitor and set up the system.

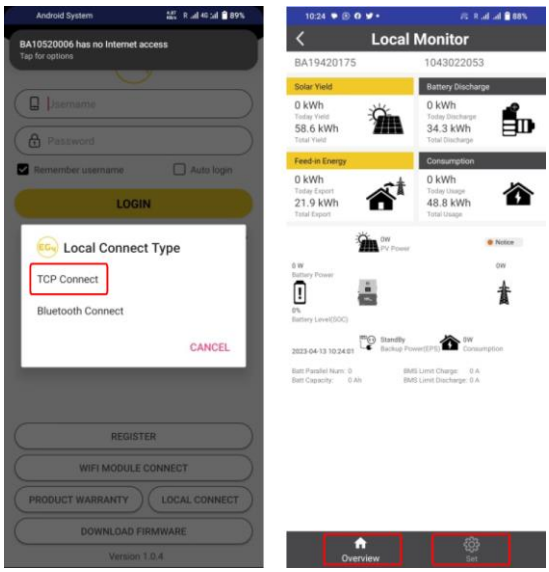

3.14 Troubleshooting Wi-Fi module

Why is the middle light for the Wi-Fi module flashing?

After setting the right Wi-Fi password, all three lights should be on solidly. If it is still flashing, try the following:

1. Check to see if the Wi-Fi is connected and that the correct password has been entered. You can use your device to connect to a Wi-Fi hotspot and visit the website 10.10.10.1 to check; the TCP client status should be "connected" as seen in the image. The login username and password are both "admin." Check your Wi-Fi name and password if it is.
2. Prior to setting the password, you should add the dongle to the system. After you register and enter the Wi-Fi SN and PIN, this dongle is automatically added to the system. While logged in, go to "Configuration" -> "Dongles" -> "Add dongle" on https://monitor.eg4electronics.com/ to add this dongle to your current configuration if you have more than one dongle. Restart the Wi-Fi module by unplugging it and plugging it back in after installing the dongle.

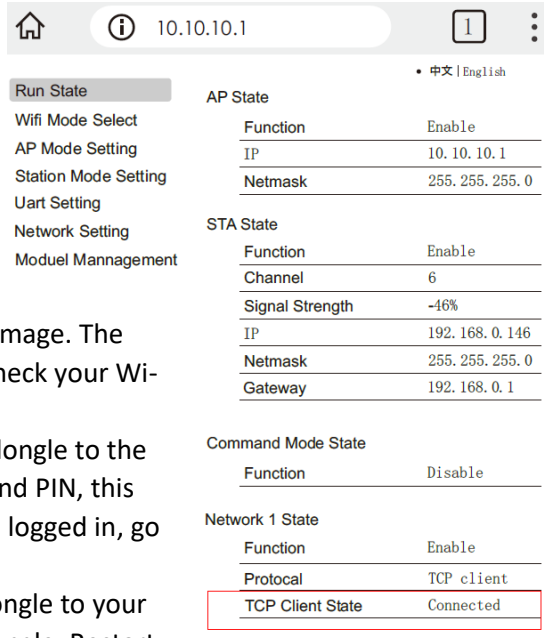

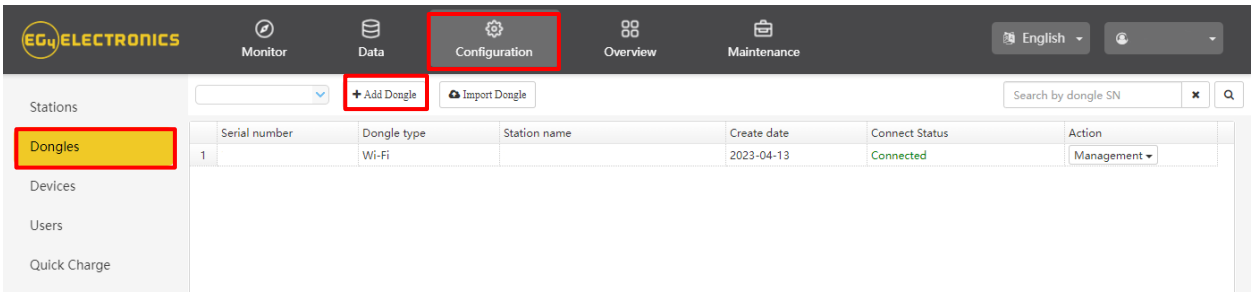

4 Operation Guide

4.1 Operation Mode and Function

4.1.1 Self-Usage Mode

In this mode, the order of priority for powering loads is Solar>Battery>Grid. The order of priority for solar power usage is Load>Battery>Grid.

- **Application Scenarios**
  Self-usage mode will increase the self-consumption rate of solar power and reduce energy bills significantly.
- **Related Settings**
  Effective when Charge Priority, AC Charge, and Forced Discharge are disabled.

Example

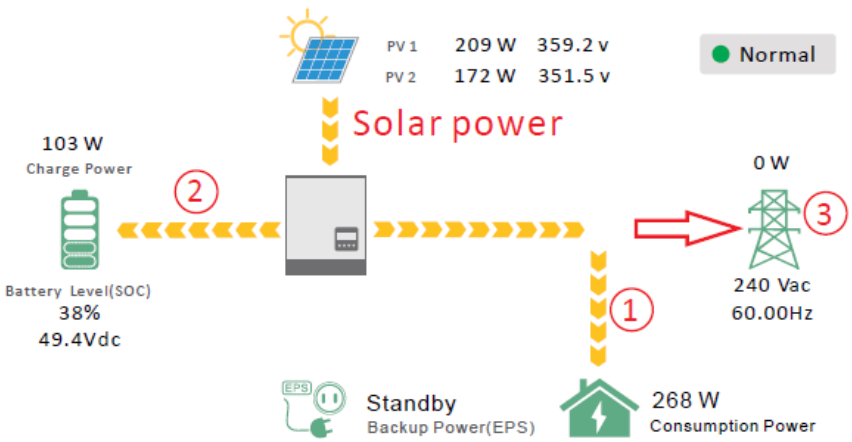

When solar power is enough, solar will power the loads, then charge the battery, and then feedback into the grid *(when the feedback function is enabled)*.

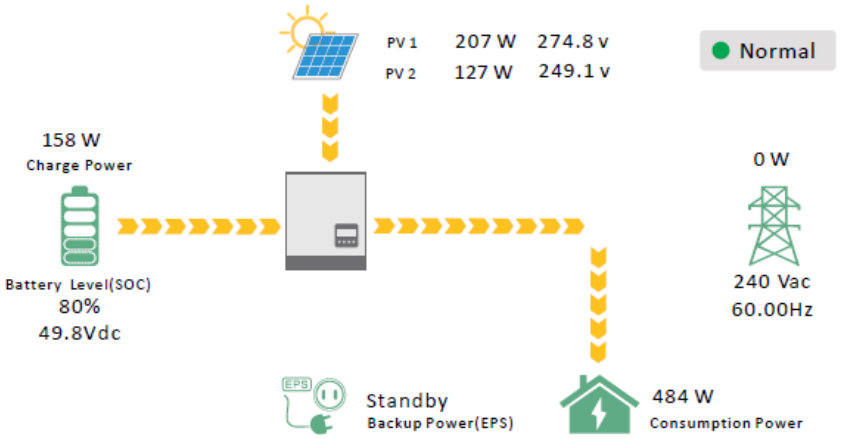

When solar power is **not** enough to take the load, the solar and battery will take the load together. If the battery is empty, the grid will be used to power the loads.

4.1.2 Charge First Mode

The order of priority for solar power usage will be Battery>Load>Grid. During the **charge first** period, loads are first supplied power from the grid. If there is excess solar power after charging batteries, the excess solar will power the loads along with grid power.

- **Application Scenarios**
  When users want solar power to charge batteries and the grid is used to power loads.
- **Related Settings:**

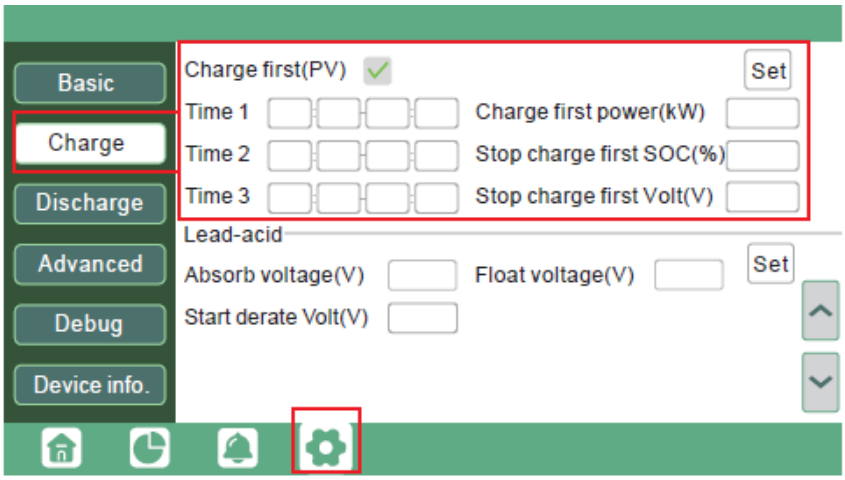

Example

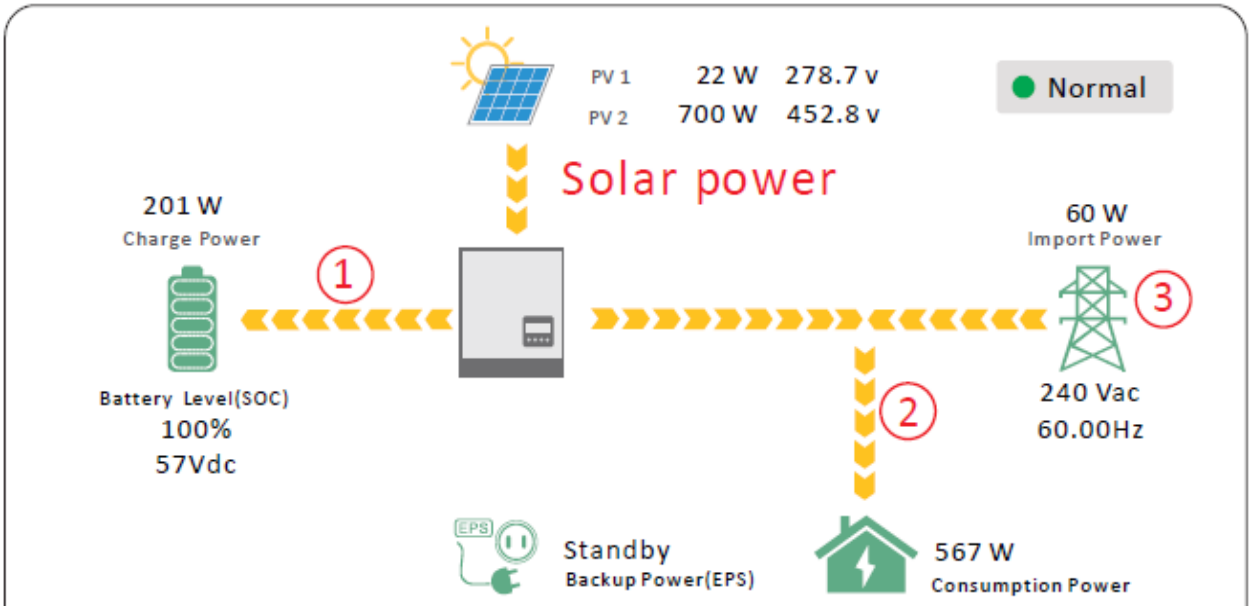

Solar power will be used to charge the battery first.
If there is extra power, it will be used to take the load.

4.1.3 AC Charger Mode

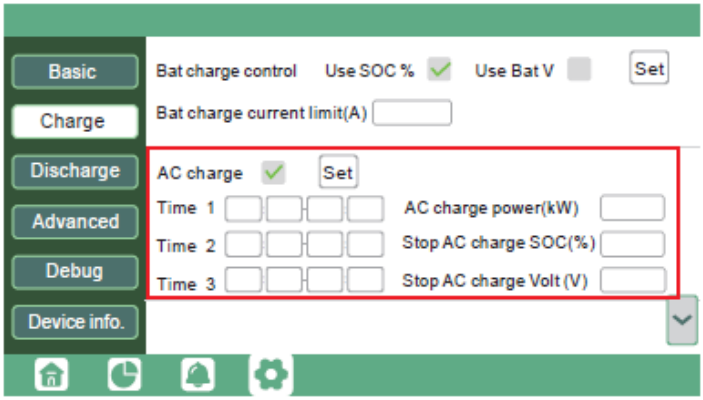

AC charger mode

Users can charge batteries with grid power when electricity prices are low, then use battery power run loads or export to the grid when electricity prices are high.

Application Scenarios

When users have a Time of Use (TOU) rate plan.

Related Settings (see image to left)

4.1.4 Grid Peak-Shaving Function

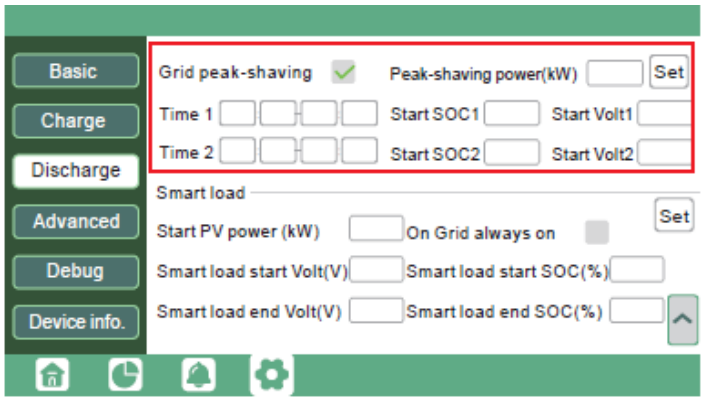

Grid peak-shaving and peak-shaving power (kW):

Used to set the maximum power that the inverter will draw from the grid.

4.1.5 Smart Load Function

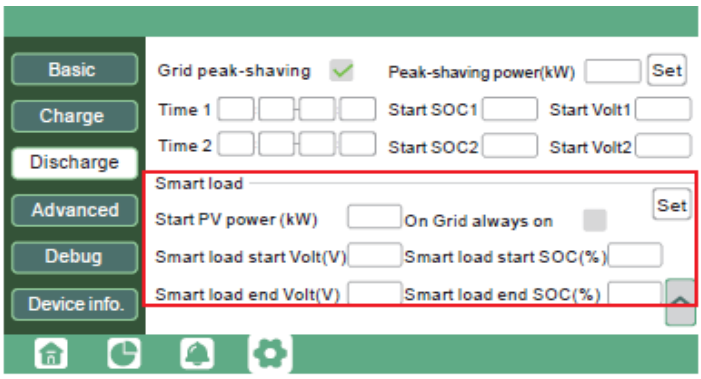

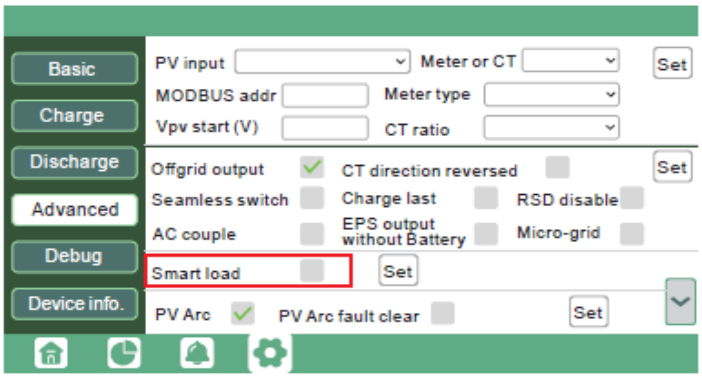

Smart Load: This function will make the GEN input connection point to a load connection point. If enabled, the inverter will supply power to this load when the battery SOC and PV power are above user set values.

For Example: *Smart load start SOC=90%*
Smart load end SOC=85%
Start PV power=1kW means:
When the PV power exceeds 1000W, and the battery system SOC gets to 90%, the Smart Load Port (GEN) will automatically switch on to power the connected load. When the battery reaches SOC<85% or PV power<1000W, the Smart Load Port automatically switches off.

Important Note:

*If the smart load function is enabled, a generator **cannot** be connected at the same time; otherwise, the device will be damaged!*

4.2 Rapid Shutdown

The inverter includes a rapid shutdown system that complies with 2017 and 2020 NEC 690.12 requirements. A rapid shutdown switch should be connected to the RSD terminals on the inverter and mounted on a readily accessible location outdoors (check with your AHJ for requirements).

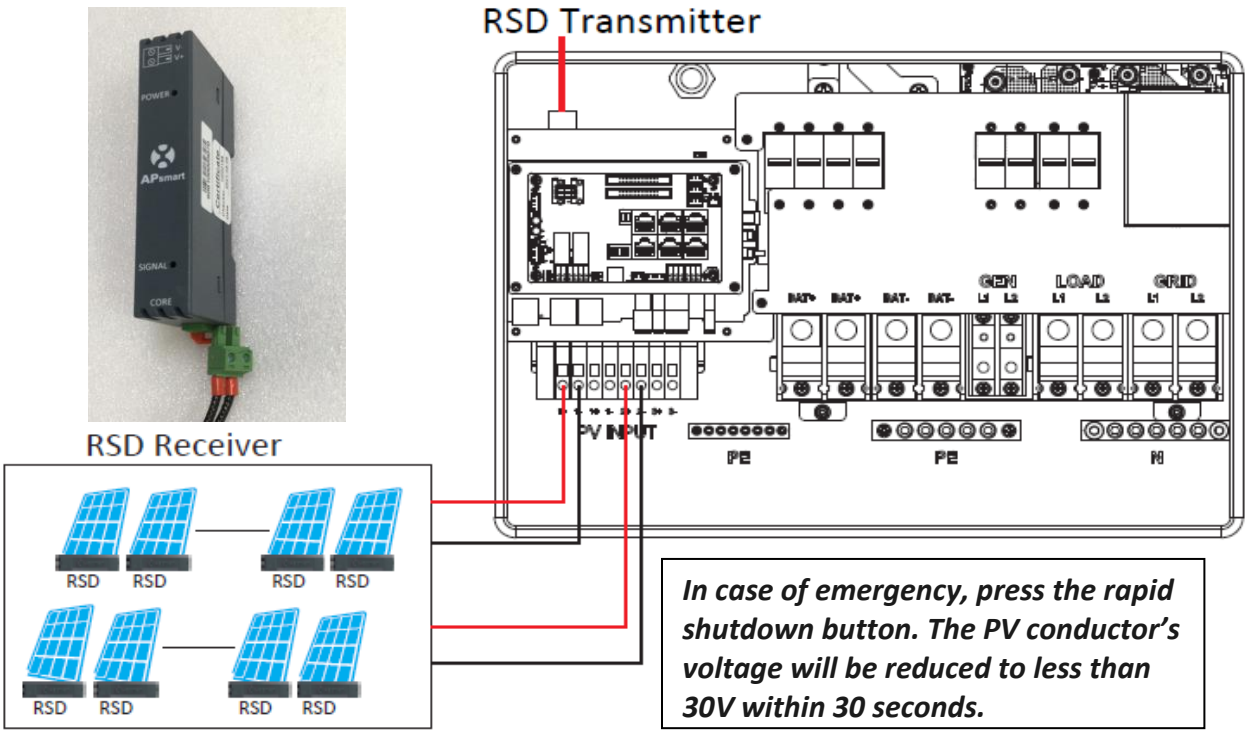

In case of emergency, press the rapid shutdown button. The PV conductor's voltage will be reduced to less than 30V within 30 seconds.

4.3 LCD Screen

Running status, real-time power, and daily and accumulated energy information can all be conveniently viewed on the inverter's LCD screen. Additionally, users can also check the alarm and fault record on the display for troubleshooting.

4.3.1 Viewing Information and Alarm Fault/Record

Home Screen

Touch the LCD screen to light it up if in sleep mode; the home page will appear on the display. Users will see a system overview diagram along with real-time information of each component, such as battery SOC, battery charging/discharging power, grid import/export power, load power, etc. On the right side of the screen, users can check daily and accumulated solar energy, battery charge/discharge energy, grid import/export energy, as well as load consumption.

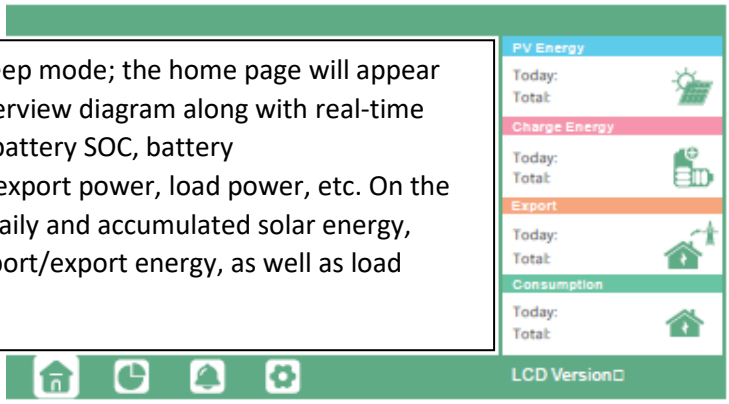

Detailed System Information

Click on the pie icon at the bottom of the screen to view the detailed real-time solar information, battery information, grid information, and load output information.

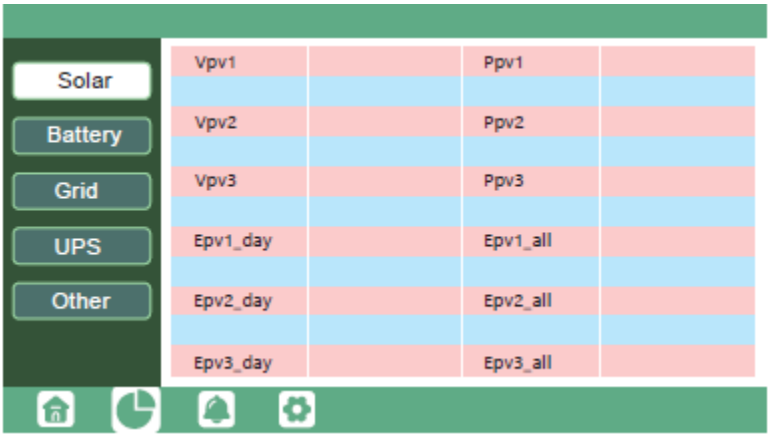

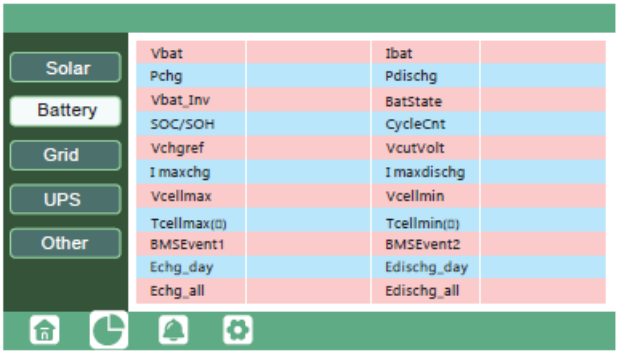

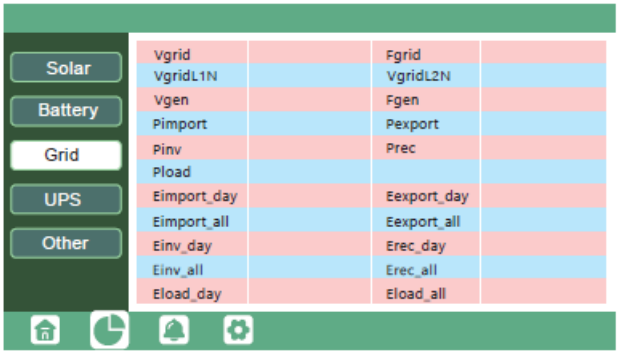

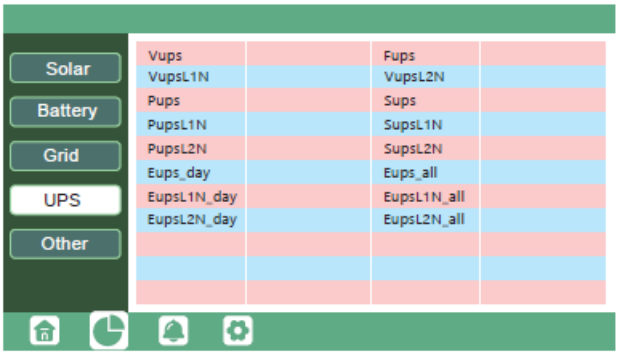

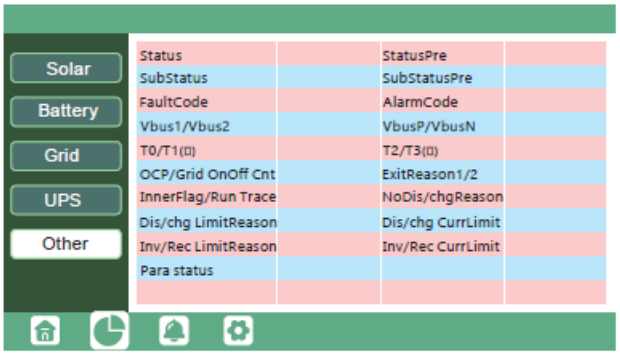

Fault/Alarm Information

By touching the bell icon at the bottom of the screen, users will see all the current and historical faults and warning information on this page.

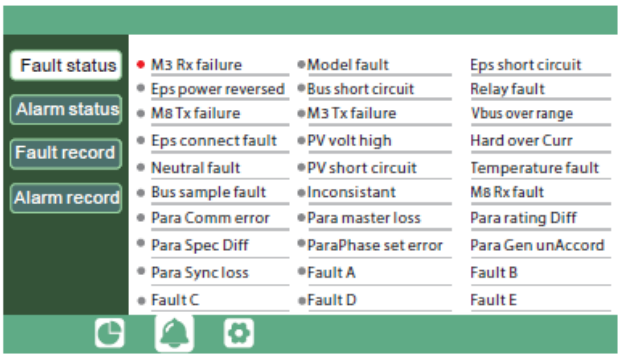

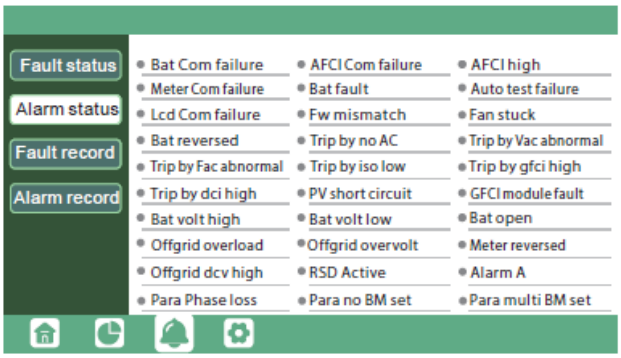

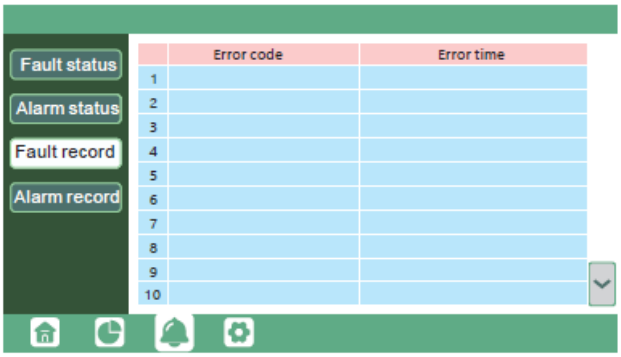

4.3.2 Setting Parameters

Click on the gear icon at the bottom of the screen to get into the parameter setting page for the inverter. If prompted during setting changes, **enter "00000"** as the password.

1. Basic Settings

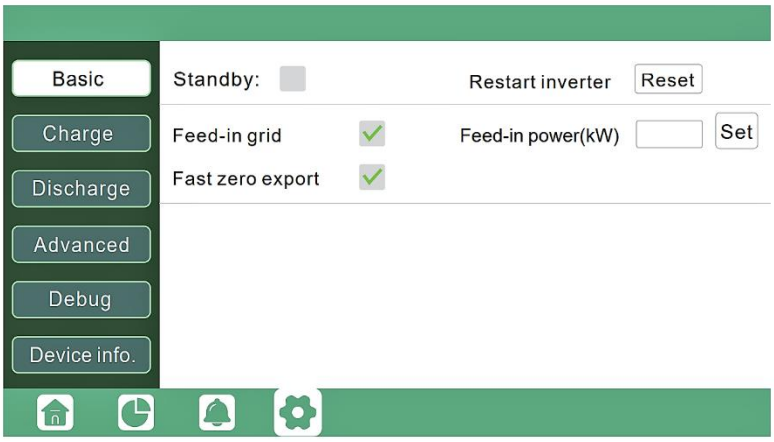

Standby: This setting is for users to set the inverter to normal or standby status. In standby status, the inverter will stop any charging, discharging, or solar feed-in operations.

Restart inverter: This selection restarts the system. *Please note the power may be interrupted when the unit is restarted.*

Feed-in grid: This selection is for users to set a zero-export function. If exporting solar power is not allowed, users need to disable the '***Feed-in Grid***' option. If a user's utility meter is tripped with minimal solar export, '***Fast zero export***' can be enabled; thus, the export detection and adjustment will take place every 20ms, which will effectively avoid any solar power being exported. If export is allowed, users can enable '***Feed-in Grid***' and set a maximum allowable export limit in ***'Feed-in Power (kW).'***

2. Charge Settings

Bat. charge control: Users can decide to use SOC or Bat V to control charge and discharge logic depending on battery type.

Bat. charge current limit (A): Users can set the maximum charge current.

AC Charge: Utility charge configuration. If users want to use grid power to charge their battery, then they can enable ***'AC Charge'*** and set time periods when AC charging can happen. Set ***'AC charge power (kW)'*** to limit utility charging power.

Set '***Stop AC Charge SOC (%)***' as the target SOC for utility charging or '***Stop AC Volt (V)***' as the target battery voltage for utility charging.

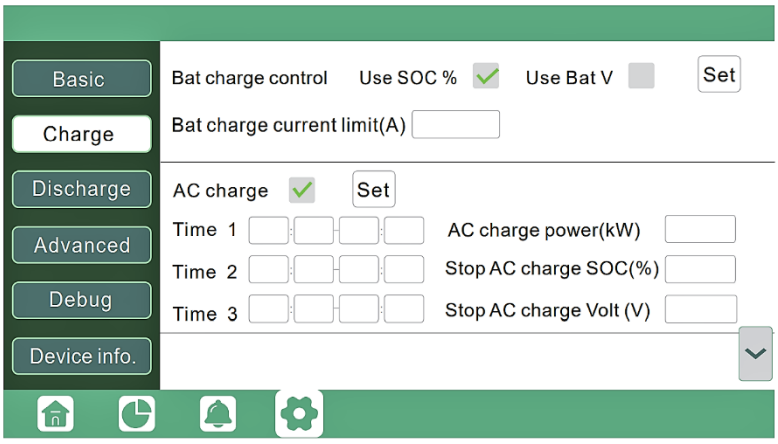

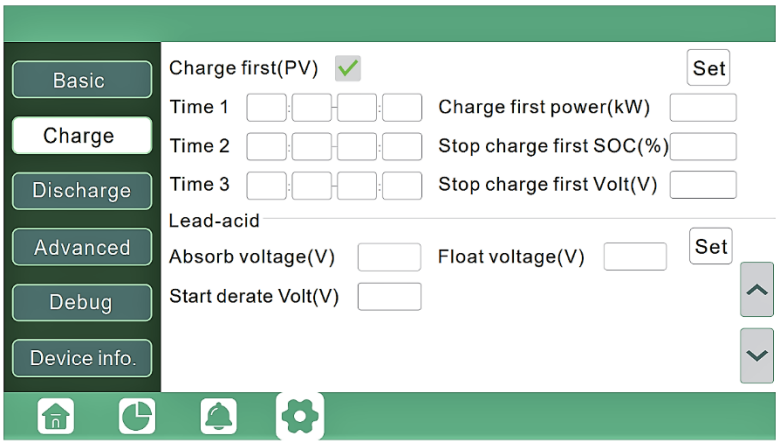

Charge first (PV): PV charge configuration. When using ***'Charge first,'*** PV will charge the battery as the priority. Users can set time periods when PV charge can happen.

a. ***Charge first power (kW):*** Limits PV charge *power*

b. ***Stop charge first SOC (%)***: The target SOC for PV charge first.

c. ***Stop charge first Volt(V)***: The target battery voltage for PV charge first.

Lead-acid: When using a lead-acid battery, users need to set parameters in these programs. Follow the battery manufacturer's recommendation for these settings.

Generator

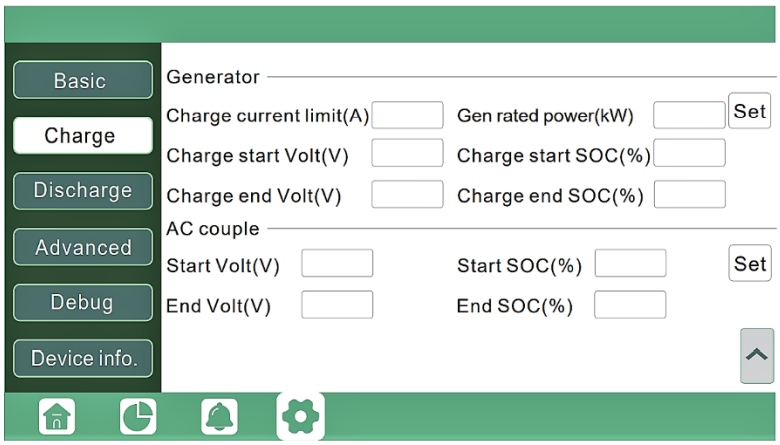

Bat. charge current limit(A): Maximum battery charge current from the generator. The generator will start charging according to the '***Charge start Volt/SOC***' and stop charging when the battery voltage or SOC reaches the '***Charge end Volt/SOC'*** value***.***

Gen rated power(kW): The inverter has a peak-shaving function. Users can enable it and set up the Gen peak-shaving power with this setting.

3. Discharge Settings

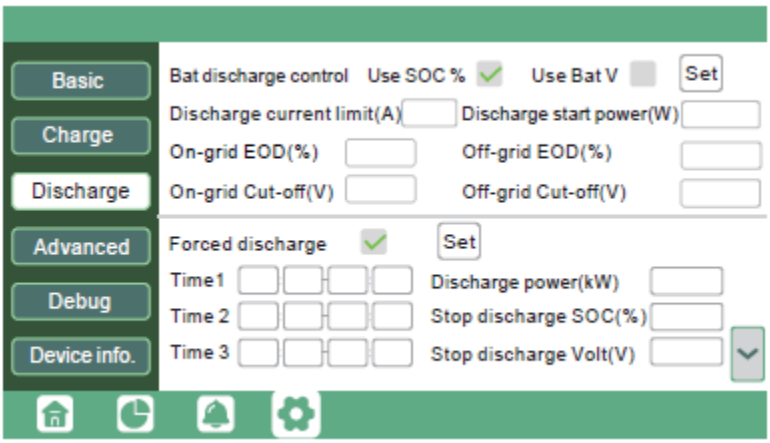

Bat discharge control: Users can choose ***'Use SOC %'*** or ***'Use Bat V'*** to control the battery discharge state.

Discharge current limit(A): The maximum discharge current from the battery.

Discharge start power(W): The minimum value can be set to 50. When the inverter detects the import power is higher than this value, the battery starts discharging; otherwise, the battery will stay in standby.

On-grid EOD(%), Off-grid EOD(%) / ***On-grid Cut-off(V)***, ***Off-grid Cut off(V):*** End of discharge SOC/Cutoff voltage when the system is in an on-grid or off-grid situation, respectively.

Forced discharge: This setting will force the battery to discharge within the programmed period. In the preset period, the inverter will discharge the battery at the power set by ***'Discharge power(kW)'*** until battery SOC or voltage reaches ***'Stop discharge'*** value.

4. Advanced Settings

Important

The following settings may need to be adjusted by the installer after installation. **Please consult with your installer/distributor before making any changes to avoid conflicting settings or damage to your system!**

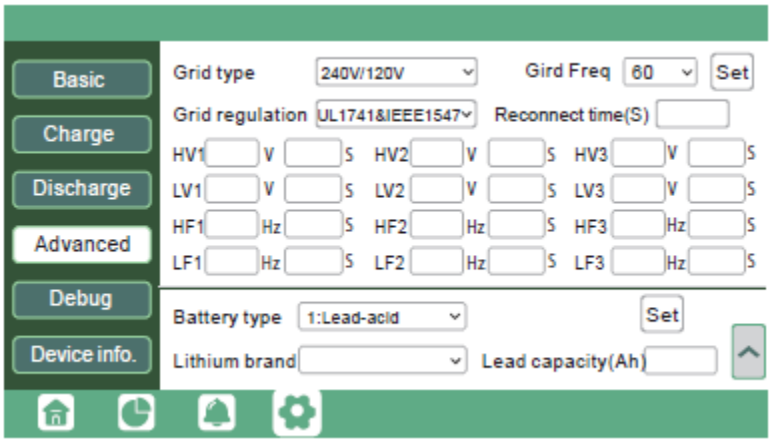

Grid type: You can choose 240/120V or 220/208V

Battery type: No batter, Lead-acid, or Lithium.

If '***Lead-acid'*** battery is selected, please input the correct battery capacity.

If '***Lithium'*** battery is selected, please choose the battery's brand in the Lithium brand drop-down list.

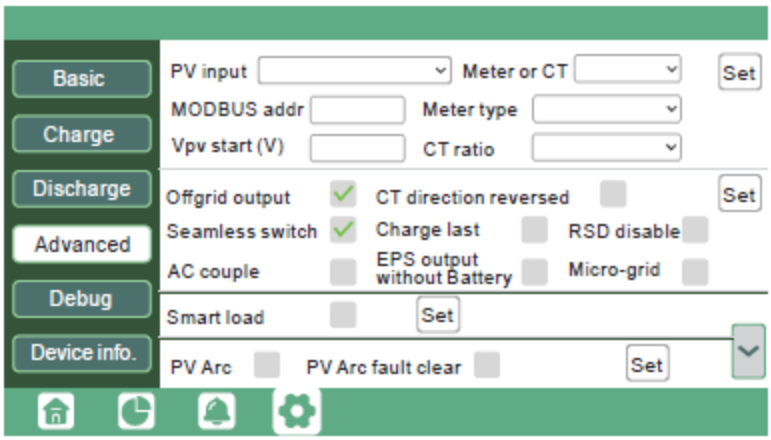

Meter or CT: The supported CT ratio is 1000:1, 2000:1, and 3000:1. The default CT ratio is 3000:1. If third-party CT is used, please ensure its CT ratio is one of the three supported types and set it accordingly.

Meter type: Please select this setting according to the meter installed.

Off-grid output: Enabling this setting will cause the inverter to provide backup power if the grid is lost.

'Seamless switch' must be enabled if users want the load to be transferred seamlessly to the inverter backup power.

'***PV Grid Off***' can be enabled to use solar power to supply load when the grid fails or load-shedding happens. If users don't have a battery installed yet but still wish to have inverter backup power with only solar panels connected, this setting can be enabled.

'Micro-grid' should be set ***only*** when the generator is connected to the inverter's grid port. With this option enabled, the inverter will use AC power to charge the battery and won't export any power through the grid port if AC power is present at the inverter's grid port.

'Charge last' will use solar power in the following order: 1. Loads> 2. Grid export> 3. Battery charging.

'CT direction reversed' occurs when the CT is installed in the wrong direction; the installer can remedy this by checking this box.

'Role' setting of the parallel system. It is set to ***'1 phase master'*** by default. **In a parallel system, only one inverter is allowed to be set as Master and the others are set as Slaves.**

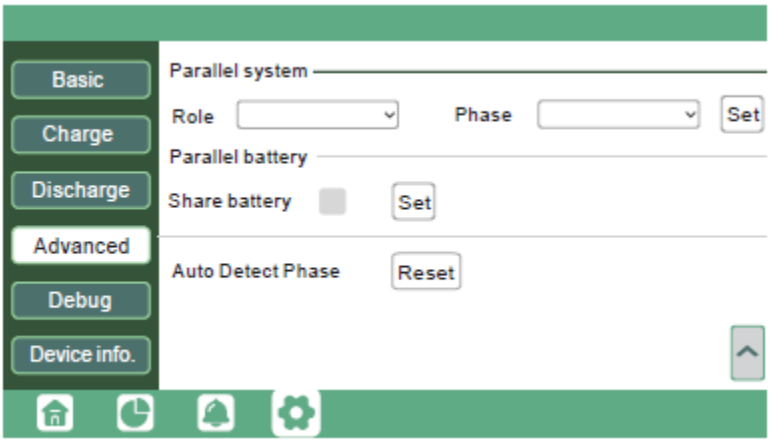

'Phase' is the phase code setting of the load output. The system will automatically detect the phase sequence of the inverter (consistent with the phase sequence of the connected grid mains) and display it on the inverter after it is connected to the grid.

'Share battery': If all inverters are connected to the same battery bank when configured as a parallel system, then this setting must be ***enabled***. If the inverters are configured as a parallel system and are connected to independent battery banks, then this setting must be ***disabled***.

Reminders:

- All setting changes for parallel inverters must be done while in Standby Mode.
- If the system is connected to a lithium battery, the host of the battery bank needs to communicate with the inverter that is set as Master in the parallel system.
- *Keep all the settings the same for each inverter in the parallel system on the LCD or remote monitor!*

4.4 Inverter Start-Up and Shutdown Procedure

4.4.1 Starting up the inverter

1. Turn on the battery system first, then turn on the DC breaker between battery and inverter.
2. Make sure the PV voltages of the strings are higher than 120V and check whether the inverter works in PV charge or PV charge backup mode.
3. Make sure Steps 1 and 2 are running properly before turning on the grid power or generator breaker. Check whether the inverter can go between bypass mode and on-grid mode normally.
4. Power on load breakers.

4.4.2 Shutting down the inverter

Danger!

Never *disconnect the battery, PV, or AC input power under load. If there is an emergency and users must shut down the inverter, please follow the steps outlined below.*

1. Turn off the grid breaker of the inverter.
2. Switch off the load breaker.
3. Turn off the PV breaker(s) and then battery breaker. Wait for the LCD to go off.

5 Troubleshooting & Maintenance

5.1 Regular Maintenance

Inverter Maintenance

- ✓ Inspect the inverter every 6 months to check for any damaged cables, accessories, or terminals, and inspect the inverter itself.
- ✓ Inspect the inverter every 3 months to verify if the operating parameters are normal and there is no abnormal heating or noise from all components in the system.
- ✓ Inspect the inverter every month to confirm nothing covers the inverter heat sink. If there is, shut down the inverter and clear the heat sink to restore proper cooling.

Battery Maintenance

- ✓ Follow the manufacturer's requirements on maintenance. When users carry out maintenance on batteries, please make sure to fully shut down the inverter for safety.

5.2 LED Description

LED	Display	Description	Action
Green LED	Solid lit	Working normally	No action needed
	Flashing	Firmware upgrading	Wait until update is complete
Yellow LED	Solid lit	Warning, inverter may stop working	Needs troubleshooting
Red LED	Solid lit	Fault, inverter will stop working	Needs troubleshooting

5.3 Troubleshooting Based on LCD Screen

Once there is any warning or fault occurring, users can troubleshoot according to the LED status description and the warning/fault information on the LCD screen.

5.3.1 Faults on the LCD and Fault List

If the dot on the left of the fault item is red, it means the fault is active.

When the dot is grey, it means the fault is inactive.

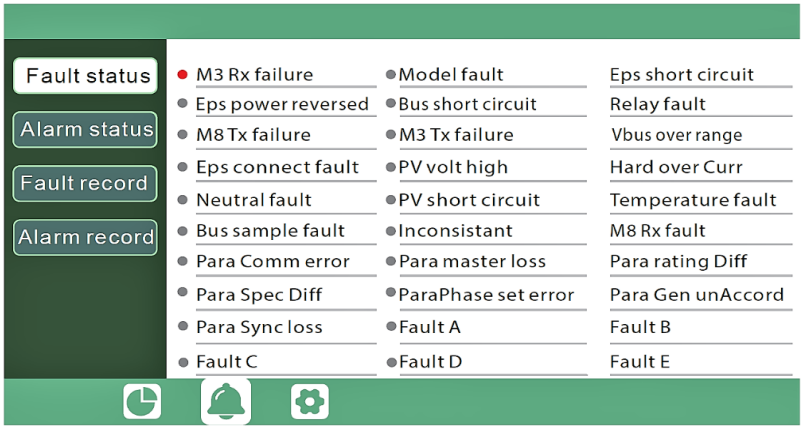

Fault List

Fault	Meaning	Troubleshooting
M3 Rx failure	M3 microprocessor fails to receive data from DSP	Restart the inverter. If the error persists, contact your supplier.
Model fault	Incorrect model value	
EPS short circuit	Inverter detected short-circuit on load output terminals	1. Check if the L1, L2, and N wires are connected correctly at the inverter load output port. 2. Disconnect the load breaker to see if fault remains. If the fault persists, contact your supplier.
EPS power reversed	Inverter detected power flowing into load port	Restart the inverter. If the fault persists, contact your supplier.
Bus short circuit	DC Bus is short circuited	
Relay fault	Relay abnormal	
M8 Tx failure	DSP fails to receive data from M8 microprocessor	
M3 Tx failure	DSP fails to receive data from M3 microprocessor	
Vbus over range	DC Bus voltage too high	Ensure the PV string voltage is within the inverter specification. If string voltage is within range and this fault persists, contact your supplier.
EPS connect fault	Load port and grid port are connected wired incorrectly or reversed.	Check if the wires on load port and grid port are connected correctly. If the fault persists, contact your supplier.
PV volt high	PV voltage is too high	Please check if the PV string voltage is within the inverter specification. If string voltage is within range and this fault persists, contact your supplier.
Hard over curr	Hardware level over current protection triggered	Restart the inverter. If the fault persists, contact your supplier.
Neutral fault	Voltage between N and PE is greater than 30V	Ensure the neutral wire is connected correctly.
PV short circuit	Short circuit detected on PV input	Disconnect all PV strings from the inverter. If the error persists, contact your supplier.
Temperature fault	Heat sink temperature too high	Install the inverter in a place with good ventilation and no direct sunlight. If the installation site is okay, check if the NTC connector inside the inverter is loose.

Bus sample fault	Inverter detected DC bus voltage lower than PV input voltage	Restart the inverter, if the fault persists, contact your supplier.
Inconsistent	Sampled grid voltage values of DSP and M8 microprocessor are inconsistent	
M8 Rx fault	M8 microprocessor fails to receive data from DSP	
Para Comm error	Parallel communication abnormal	1. Check whether the connection of the parallel cable is loose. Connect the parallel cable correctly. 2. Ensure the PIN status of the CAN communication cable from the first to the end inverter is connected correctly.
Para master loss	No master in the parallel system	1. If a master has been configured in the system, the fault will automatically be removed after the master works. 2. If a master has not been configured and there are only slaves in the system, set the master first. Note: For a single-unit system, the role of the inverter should be set as “1 phase master.”
Para rating Diff	Rated power of parallel inverters are inconsistent	Confirm that the rated power of all inverters is the same.
Para Phase set error	Incorrect setting of phase in parallel	First confirm the wiring for the parallel system is correct. Once verified, connect each inverter to the grid. The system will automatically detect the phase sequence and the fault automatically resolves after the phase sequence is detected. If the fault persists, contact your supplier.
Para Gen in Accord	Inconsistent generator connection in parallel	Some inverters are connected to generators, and some are not. Confirm *all* inverters in parallel are connected to generators together, or *none* of them are connected to generators.
Para sync loss	Parallel inverter fault	Restart the inverter. If the fault persists, contact your supplier.

5.3.2 Alarm on the LCD and Alarm List

If the dot to the left of the fault item is yellow, it means the fault is active. When it is grey, it means the fault is inactive.

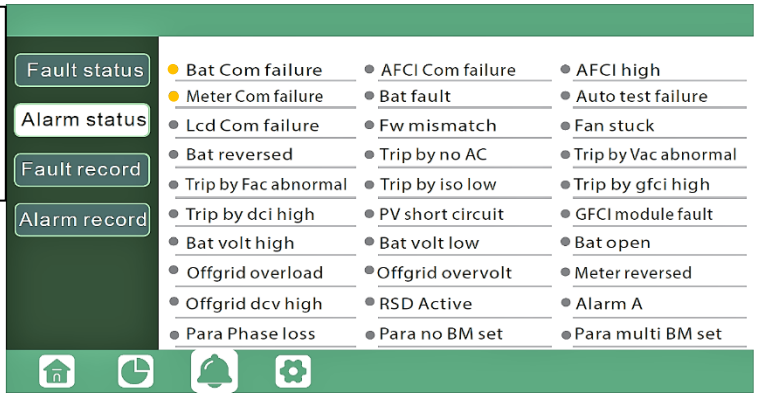

Alarm List

Alarm	Meaning	Troubleshooting
Bat com failure	Inverter fails to communicate with battery	Check if the communication cable pinout is correct, and if you have chosen the correct battery brand on the inverter's LCD. If all is correct but this alarm persists, contact your supplier.
AFCI com failure	Inverter fails to communicate with AFCI module	Restart inverter. If the error continues, contact your supplier.
AFCI high	PV arc fault is detected	Check each PV string for correct open-circuit voltage and short-circuit current. If the PV strings are in good condition, please clear the alarm on the inverter LCD.
Meter com failure	Inverter fails to communicate with the meter	1. Check if the communication cable is connected correctly and in good working condition. 2. Restart inverter. If the alarm persists, contact your supplier.
Bat Fault	Battery cannot charge or discharge	1. Check the battery communication cable for correct pinout on both inverter and battery end. 2. Check if you have chosen an incorrect battery brand. 3. Check if there is fault on battery's indicator. If there is a fault, please contact your battery supplier.
LCD com failure	LCD fails to communicate with M3 microprocessor	Restart the inverter. If the fault still occurs, contact your supplier.
Fwm mismatch	Firmware version mismatch between the microprocessors	
Fan stuck	Cooling fan(s) are stuck	

Trip by GFCI high	Inverter detected leakage current on AC side	1. Check if there is ground fault on grid and load side. 2. Restart inverter. If the alarm persists, contact your supplier.
Trip by dci high	Inverter detected high DC injection current on grid port	Restart inverter. If the alarm persists, contact your supplier.
PV short circuit	Inverter detected a short circuit in PV input	1. Check whether each PV string is connected correctly. 2. Restart inverter. If the alarm persists, contact your supplier.
GFCI module fault	GFCI module is abnormal	Restart inverter. If the alarm persists, contact your supplier.
Bat volt high	Battery voltage too high	Check whether the battery voltage exceeds 59.9V; battery voltage should be within inverter specification.
Bat volt low	Battery voltage too low	Check whether the battery voltage is under 40V; battery voltage should be within inverter specification.
Bat open	Battery is disconnected from inverter	Check battery breaker or battery fuse. Reconnect as needed.
Off-grid overload	Overload on EPS port	Check if load power on inverter EPS port is within inverter specification.
Off-grid overvolt	EPS voltage is too high	Restart inverter. If the alarm persists, contact your supplier.
Meter reversed	Meter is connected reversely	Check if the meter communication cable is connected correctly on the inverter and meter sides.
Off-grid dcv high	High DC voltage component on EPS output when running off-grid	Restart inverter. If the alarm persists, contact your supplier.
RSD Active	Rapid shutdown activated	Check if the RSD switch is pressed.
Para phase loss	Phase losing in parallel system	Confirm that the wiring of the inverter is correct. If the master is set to 3-phase master, the number of parallel inverters must be ≥3. (The grid input for each inverter should be connected correctly to Grid L1, L2, L3.) If the master is set to 2x 208 master, the number of parallel inverters needs to be ≥2. (And the grid input of each inverter should be connected correctly to Grid L1, L2, L3.)
Para no BM set	Master isn't set in the parallel system	Set one of the inverters in the parallel system as the master.
Para multi BM set	Multiple masters have been set in the parallel system	There are at least two inverters set as the Master in the parallel system. Keep one Master and set the other as Slave.

5.4 Fan Replacement

Please check and clean the fans regularly—recommended every 6 months—or as conditions require.

Please replace the fan according to the below diagram ***only*** if there is a problem with the fan. Turn off the system and all breakers and wait for at least ***5 minutes*** before disassembling the machine.

1) Loosen the screws and remove.
2) Remove the fan mounting plate.

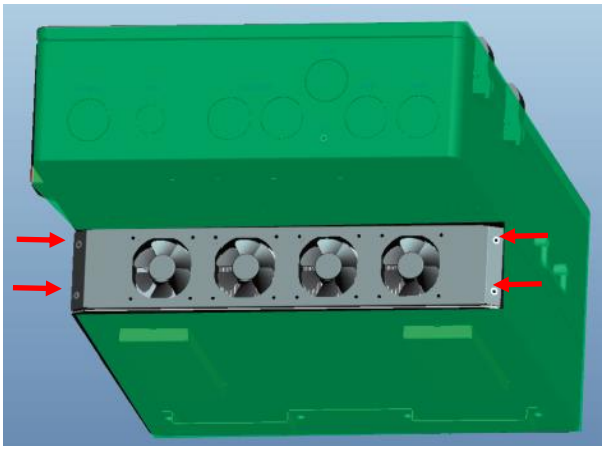

3) Pull out the fan bracket completely and use a soft brush to clean the fan or replace a damaged fan.
4) Remove the fan and replace it if required.

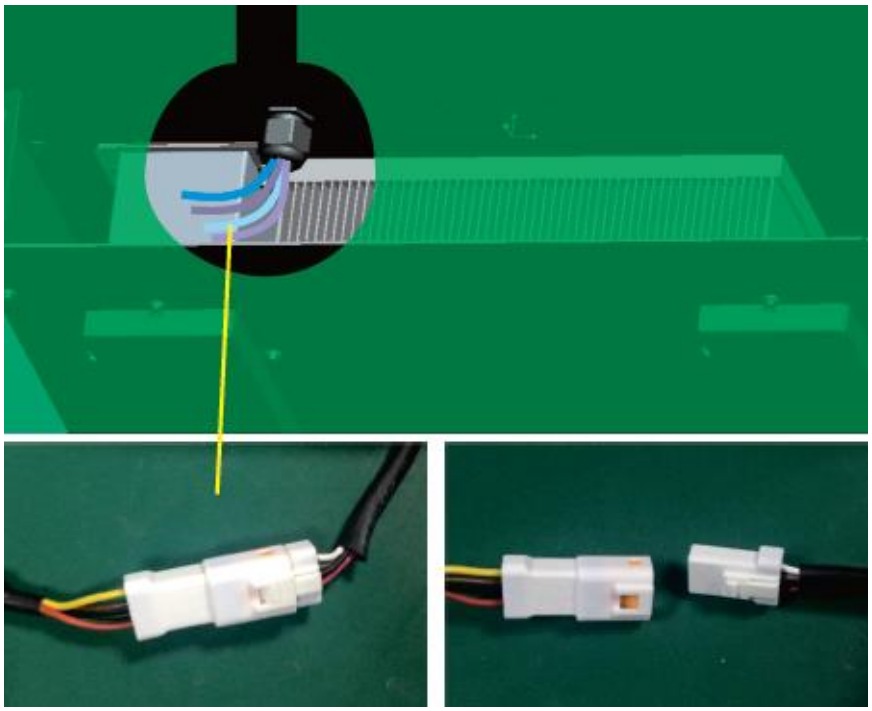

5) After the fan is installed, follow the previous steps to reassemble the unit.

6 Technical Specifications

AC Input Data	
Nominal AC Voltage	208/240VAC
Frequency	60Hz
Max. Continuous AC Current	50A
Power Factor	1
AC Grid Output Data	
Nominal Output Current	50A
Max. Output Current	50A
AC Bypass (Grid)	200A
Rated Voltage	240VAC
Operating Voltage Range	180–270VAC
Nominal Power Output (W)	@240V 12,000W/@208V 10,400W
Operating Frequency	60Hz
Operating Frequency Range	55–65Hz
Phase Shift	0.99@ full load
Reactive Power Adjust Range	(-0.8) – (+0.8) leading adjustable
THDI (Total Harmonic Distortion Current)	3%
Sync Inrush Current	35A
Backup/UPS AC Output Data	
Nominal Output Current	50A
AC Bypass (Generator)	90A
Nominal Output Voltage (V)	240 | 120/240 | 120/208 VAC
Rated Output Power (VA)	@240 VAC 12,000W/@208 VAC 10,400W
Max Cont. Line Wattage	8,000W per 120V
Surge Power (W)	14,000W (10 min.), 16,000W (5 min.)
Operating Frequency	60Hz
Peak Power (VA)	24,000VA (0.5s)
THDV (Total Harmonic Distortion Voltage)	<3%
Switching Time	<20ms
PV Input Data	
Max. Usable Input Current	25/15/15A
Max. Short Circuit Input Current	31/19/19A
Start Input Voltage	100 VDC
Startup Voltage	140 VDC
Full Power MPPT Voltage Range	230–500 VDC
Nominal MPPT Tracker DC Voltage	360 VDC
Nominal DC Voltage Range	100–600 VDC
MPP Operating Voltage Range	120–500 VDC
Maximum Utilized Solar Power	18,000W
Recommended Maximum Solar Input	21,000W
Number of MPPTs	3
Inputs per MPPT	2/1/1

Efficiency	
Max. Efficiency @ PV to Grid	97.5%
Max. Efficiency @ Battery to Grid	94%
MPPT Efficiency	99.9%
Idle Consumption (Normal mode)	≈70W
Idle Consumption (Standby mode)	≈18W
Battery Data	
Type	Lead-acid battery/Lithium battery
Max. Charge Current	250A
Max. Discharge Current	250A
Nominal Voltage	48 VDC
Voltage Range	40–60 VDC
General Data	
Integrated Disconnect	DC switch
Reverse Polarity Protection	Yes
DC Switch Rating for each MPPT	Yes
Output Over-Voltage Protection Varistor	Yes
Output Over-Current Protection	Yes
Ground Fault Monitoring	Yes
Grid Monitoring	Yes
Pole Sensitive Leakage Current Monitoring Unit	Yes
AFCI	Yes
RSD	Yes
Dimensions H×W×D	34.3×20.5×11.2 in. (87×52×28.5 cm)
Weight	110.2 lbs. (50kg)
Degree of Protection	NEMA4X/IP 65
Cooling Concept	Fan
Topology	TL (Transformerless)
Relative Humidity	0-100%
Altitude	<2,000m
Operating Temperature Range	-25~60°C, >45° derating
Noise Emission	<50dB
Display	Color touchscreen
Communication Interface	Rs485/Wi-Fi/CAN
Standard Warranty	10* year limited warranty
	*See EG4 Warranty Registration for terms and conditions

Notes

CONTACT US

Email: support@eg4electronics.com
Phone: +1 (903) 609-1988
Website: www.eg4electronics.com