TECHNICAL MANUAL

XNX®

Universal Transmitter

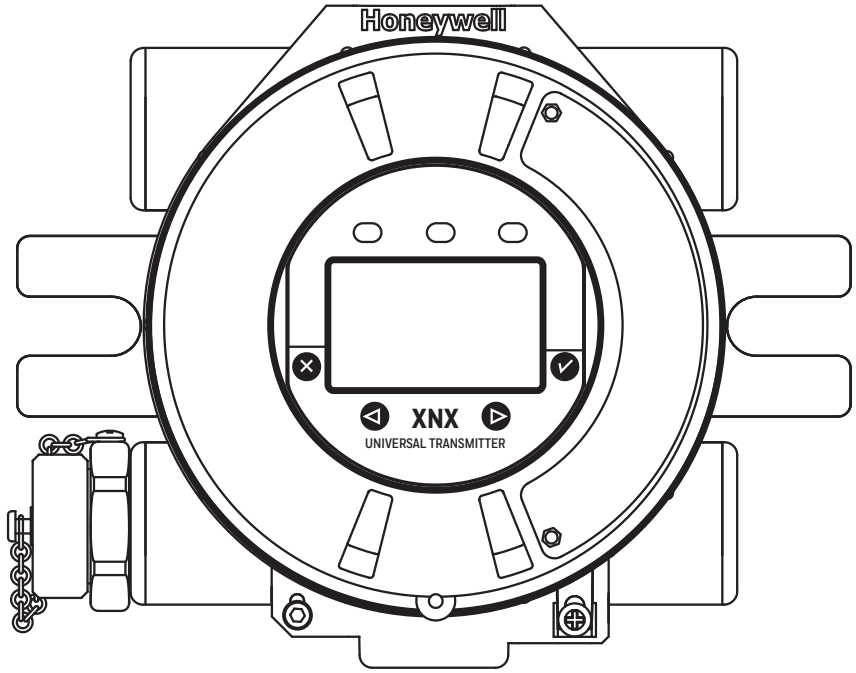

Honeywell

This page is intentionally left blank

Table of Contents

Safety and Information 5
- Warnings 6
- Hazardous Location Installation Requirements 8
- Special Conditions for Safe Use 8
- Cautions 8
- Notes 8
- Information 9
- Contacting Honeywell Analytics 9
- Revision History 9

Introduction 10
- Product Description 11
  - The Transmitter 11
  - 20 mA/HART Output 12
  - Communications 12
  - Certifications 12
  - Patents 13
  - Glossary 13
- Product Overview 14
  - Enclosure 14
  - Cover 15
  - POD 15
- Options 16
  - Local HART 16
  - Relays 16
  - Modbus 17
  - FOUNDATION Fieldbus 17
  - Accessories 17
- The Front Panel 20
  - Controls and Navigation 21
  - The General Status Screen 21
  - Entering the Menu 22
  - Displaying Transmitter Information 24
- Main Menu 24
- Menu Navigation 25

Installation and Operation 29
- Sensor Mounting and Location 30
  - Mounting the Transmitter 30
  - Wiring the Transmitter 32
  - General Wiring Considerations 33
  - Loading 33
  - Isolation 33
  - Circuit Protection 33
  - Distance Considerations for Installation 33
  - Single Transmitter 34
  - Multiple Transmitters Connected to a Single Power Source 34
  - Multiple Transmitters Connected in a “Daisy-Chain” Configuration 34
  - Power Source Selection 35
  - Wire Selection 35
  - Single Transmitter Distances 36
  - Daisy-Chained Transmitter Distances 36
  - POD Connections 38
  - 4-20mA Output, Common Connections, and Power Settings 39
  - FOUNDATION Fieldbus Wiring 41

Table of Contents

Terminal Block Connections 41
EC Personality Wiring 42
Electrochemical Sensor Installation 43
EC Sensor Remote Mounting Kit 44
mV Personality Wiring 46
mV Remote Sensor Mounting 47
IR Personality Wiring 49
Searchpoint Optima Plus/Searchline Excel Connections 50
Connecting Generic mA Devices 50
Attaching the Searchpoint Optima Plus to the Transmitter 53
Searchline Excel/Searchpoint Optima Plus Remote Installation 53
Searchpoint Optima Plus/Searchline Excel Wiring 54
Options 56
Local HART Interface 56
Point-to-Point Mode 56
Multidrop Mode 57
Cable Length 58
Relays 58
Modbus 59
FOUNDATION Fieldbus 60
Powering the Transmitter the First Time 61
IR Units Configured for Searchline Excel 62
Remote Calibration of MPD Sensors (not part of the approval by DEKRA Testing and Certification GmbH) ... 63
Configuring the Transmitter 63
Configure Menu 64
Select Language 64
Set Date and Time 65
Set mV Sensor Type 66
Set mA Sensor Type 67
Gas Selection 67
Changing the Gas or Units Name 69
Gas Selections and Alarm Limits Based on mV Sensor Type 69
Default Alarm Level for MPD and Sensepoint 74
Default Alarm Level for Searchpoint Optima 74
Range and Alarms 75
Latching/Non-Latching Alarms 78
Set Units 79
mA Levels 80
Calibration Interval 80
Accept New Sensor Type 81
Beam Block Options 82
Path Length 83
Unit ID 84
Relay Options 85
Fieldbus Options 86
Configure Security 87
Verifying the Configuration 88
Test Menu 88
Inhibit 88
Force Relays 90
Alarm/Fault Simulation 90

Table of Contents

Information Menu 92
Alarm/Fault Status 92
Transmitter Data 92
Transmitter Status 93
Sensor Data 93
Sensor Status 94
Gas Data 94
Range/Alarm Settings 95
mA Level Settings 95
Fieldbus Settings 96
Relay Data 96
Event History 98
Calibration 101
Gas Calibration Menu 102
Zero and Span Calibration for EC/mV Sensors and Searchpoint Optima 103
Using the Calibration Cup 106
Zero and Span Calibration of EC Sensors 106
Zero and Span Calibration for MPD Sensors (not part of the approval by DEKRA Testing and Certification GmbH) 111
EC Sensor Operational Life 114
Functional Gas Testing (Bump Testing) 114
Calibrate mA Output 115
Align Excel (Searchline Excel) 116
Soft Reset 116
Maintenance 117
MPD Sensor Cartridge Replacement 118
EC Sensor Cartridge and Cell Replacement 119
Warnings and Faults 121
Warning Messages 122
Notes 126
Fault Messages 127
Notes 134
Informational Messages 136
Specifications 138
Product Specifications 139
SENSOR DATA 141
Operating and Storage Conditions for Performance Tested EC Cartridges 141
Detectable Gases and Performance 142
EC Sensor Performance Data, Factory Mutual Verified 143
EC Sensor Performance Data, Dekra Testing and Certification 144
Other EC Sensors 145
Footnotes (see table on previous page): 146
Notes (see table on previous page): 146
EC Sensor Cross-sensitivity 147
Notes 154
MPD Sensor Performance Data 155
Notes 155
EN60079-29-1 Performance Approved Gases for mV Sensor Types 156
Notes 156
Other Sensor Performance Data 156
Certifications by Part Number Series 157

Table of Contents

Notes 158
Certification Labels 162
Product Identification 164
EC Replacement Sensors 165
EC Replacement Cells 166
MPD (Multi Purpose Detector) 167
Accessories/Spares 168
EC Declaration of Conformity 172
Control Drawings 173
XNX UL/CSA/FM/ATEX/UKEX/IECEx/INMETRO/RUSSIA 174
Remote Sensor Mount 178
HART Protocol 179
HART Interface 180
HART Sink, Source, and Isolated Wiring 183
DevComm PC-based HART Interface 186
Functions 187
Configuration Summary 187
Information Screens 188
Event History 188
Test 188
Calibration 189
Configuration 189
Handheld Online Menus 190
Modbus Protocol 192
Modbus and the XNX transmitter 193
Modbus Registers 195
Warranty 199
Warranty Statement 200
Warranty Conditions 200
Consumer Claims 200
Index 201

Safety and Information

Read and understand this manual before installing, operating, or maintaining the transmitter. Pay particular attention to these warnings and cautions. All of the warnings and cautions shown here are repeated in the appropriate sections of the manual.

⚠ WARNING

- Warnings identify hazardous or unsafe practices which could result in severe injury or death.

Warnings

- Installation must be in accordance with the recognized standards of the appropriate authority in the country concerned.
- Any work on the interior of the detector must be conducted only by Honeywell-trained personnel
- Before carrying out any work, ensure that local regulations and site procedures are followed. Appropriate standards must be followed to maintain the overall certification of the sensor.
- To reduce the risk of ignition in hazardous atmospheres, disconnect the equipment from the supply circuit before opening the sensor enclosure. Keep the assembly tightly closed during operation. Conduit runs must have a seal fitting connected within 18 inches (45 cm) of the enclosure.
- Never open the XNX enclosure under power unless the area is known to be non-hazardous.
- Do not use the XNX Universal Transmitter in oxygen-enriched atmospheres. In oxygen-enriched atmospheres, the electrical safety is not guaranteed.
- The sensor must be earthed/grounded for intrinsic safety, electrical safety and to limit the effects of radio frequency interference. Earth/ground points are provided inside and outside the unit. EMI note for applications using shielded cable: Cable shield must provide 90% coverage of the wiring. Cable shield terminations must be made at the cable glands with suitable EMI type glands. Avoid terminating cable shields at the Earth ground lug inside the XNX enclosure. In cases where wiring is in pipe, a shielded cable is not required. The external terminal is only a supplemental bonding connection where local authorities permit or require such a connection.
- Take care when handling EC sensor cells as they may contain corrosive solutions. Do not tamper or in any way disassemble the sensor cells. Do not expose to temperatures outside the recommended range. Do not expose the sensor to organic solvents or flammable liquids.
- At the end of their working lives, sensors must be disposed of in an environmentally safe manner, in accordance with local waste management requirements and environmental legislation. Alternatively, sensors may be securely packaged, clearly marked for environmental disposal, and returned to Honeywell Analytics. Do NOT incinerate sensors as they may emit toxic fumes.
- High off-scale readings may indicate an explosive concentration of gas.
- Verify all outputs, including display, after installation, after service events, and periodically to ensure the safety and integrity of the system.
- Do not use the transmitter in oxygen-enriched atmospheres. Concentrations displayed will be adversely affected by oxygen depletion.
- After changing parameters with a handheld device, verify that the parameter settings are correct at the transmitter.
- The factory-set passcodes must be reset to prevent unauthorized access to the transmitter's menus.
- When the transmitter is equipped with the optional Remote Mount Kit, the remote sensor must be securely mounted in a fixed position. The Remote Sensor kit is not intended to be used as a handheld sensor.

- Enclosures of remotely mounted sensors contain aluminum. When installed in Zone 1 locations, be careful to avoid ignition hazards due to impact or friction.
- Install the junction box according to local codes and manufacturer's requirements.
- The enclosures of remotely mounted 705HT sensors contain aluminum. When installed in Zone 1 locations, be careful to avoid ignition hazards due to impact or friction.
- Power off the transmitter before changing S3 or S4. Failure to do this will permanently damage the transmitter. Both switches must be set in either Source or Sink prior to applying power.
- Do not set the minimum or maximum controller alarm levels at less than 10% or greater than 90% of the full scale range of the sensor. CSA and FM agency limits are 60% LEL or 0.6mg/m^3.
- When configuring or communicating with the transmitter using the front panel displays, resume monitoring by exiting all menus and returning to the General Status menu manually. No time outs are invoked.
- When selecting a new target gas for units with a Searchpoint Optima Plus, the sensor must be recalibrated.
- XNX Universal Transmitters carrying UL/CSA/FM approvals that are configured for devices measuring %LEL will not allow adjustments to the full scale value. The range is fixed at 100%.
- There is a potential loss of sensitivity during exposure to high concentrations of H2S. Under these conditions, set the control unit to latch at overrange. In standalone configuration, set alarms to latching. When resetting the overrange or alarm, verify correct operation of the transmitter.
- Keep the passwords in a secure area to prevent unauthorized access to the transmitter. If the passwords are lost, resetting the transmitter will require a service technician.
- When the transmitter is placed in Inhibit Mode, alarms are silenced. This will prevent an actual gas event from being reported. Inhibit Mode must be limited to testing and maintenance only. Exit Inhibit Mode after testing or maintenance activities.
- Honeywell recommends periodic bump tests (every 30 days or in accordance with customer site procedures) to the sensor to insure proper operation and compliance with the functional safety rating of the installation.
- Honeywell Analytics recommends bump testing of ClO2, Cl2, HF, and HCl sensors frequently and in accordance with customer site procedures to ensure proper operation and compliance with the functional safety rating of the installation.
- As some test gases are hazardous, exhaust the flow housing outlet to a safe area.
- Exposure to desensitizing or contaminating substances or concentrations causing operation of any alarm may affect sensor sensitivity. Following such events, verify sensor performance by performing a functional gas test (bump test).
- When servicing or replacing sensors, reduce the risk of ignition in hazardous atmospheres by declassifying the area or disconnecting the equipment from the supply circuit before opening the sensor enclosure. Keep the assembly tightly closed during operation.
- Take appropriate precautions when using toxic, flammable, or pressurized cylinders.
- XNX transmitter is SIL2 approved and please refer to XNX transmitter safety manual (1998-0808) for the detail of SIL certificate.

ELECTROSTATIC DISCHARGE

To minimize the risk of electrostatic discharge:

- Ground the transmitter adequately
- Install the transmitter in a manner that will prevent accidental electrostatic discharges, e.g. ensure that objects do not rub against the housing etc.
- Clean the enclosure with a damp cloth when necessary

Hazardous Location Installation Requirements

- Read and understand this manual prior to installation and use.
- Use only certified cable glands for installation.
- Shielded armored cable is required for CE compliance.
- To reduce the risk of ignition in hazardous atmospheres, conduit runs must have a pour gland installed within 18 inches (45 cm) of the enclosure.
- All ¾ inch NPT conduit, stopping plugs, and adapters must be installed with 5¼ threads (minimum) engaged to maintain the explosion-proof rating.
- The XNX cover assembly must be fully seated to the enclosure (7 threads minimum) to maintain the explosion-proof rating.
- Use only the supplied stopping plugs (Honeywell part number 1226-0258) with the XNX Universal Transmitter.
- For units fitted with the optional relay module: relay contact ratings are 250 VAC 5A, 24 VDC 5A resistive loads only.
- Use copper conductors only. Tighten terminal block screws to 4.5 lb/in (max).
- For XNX-UT**-***** transmitters, refer to XNX control drawing 1226E0402.

Special Conditions for Safe Use

- The following applies to the HART Barrier intrinsically safe circuits: For installations in which both the Ci and Li of the intrinsically safe apparatus exceed 1% of the Co and Lo parameters of the associated apparatus (excluding the cable), then 50% of Co and Lo parameters are applicable and shall not be exceeded, i.e., the Ci of the device plus the C of the cable must be less than or equal to 50% of the Co of the associated apparatus, and the Li of the device plus the L of the cable must be less than or equal to 50% of the Lo of the associated apparatus.
- For circuits connected to the EC barrier in which the capacitance and inductance exceed 1% of the permitted values, the maximum permitted capacitance is limited to 600 nF for group IIC and 1uF for group IIIC.
- The connection to the HART circuit shall be rated a minimum of IP 6X.
- Delays resulting from transmission errors between sensor and transmitter extend response times T90 by more than one-third. The period until fault indication is 10 seconds.
- Consider the overall response time of the whole system when connecting to other equipment.
- The HART interface is subject of this EC-type examination certificate only for the purpose of configuration and maintenance. The options “Modbus interface” and “FOUNDATION Fieldbus interface” are not subject of this EC-type examination certificate.
- Long-term exposure (>20 minutes) to concentrations exceeding the full-scale range of the H_2S sensor Type 2 can cause it to lose sensitivity. The measured value may then decrease even though high levels of toxic gas are still present. If such conditions can occur, set the control unit to latch at overrange. In standalone operation, set alarms to latching.
- When resetting the overrange or alarm, verify the correct operation of the transmitter. Before re-calibrating the transmitter, verify the absence of gas.
- An overrange condition may be as result of a poor connection between the sensor and transmitter.
- The flameproof joints are not intended to be repaired.

Cautions

⚠ CAUTION

Caution messages address situations that could result in damage to the transmitter or sensors.

Notes

⚠ NOTE

Notes relate helpful information.

Waste Electrical and Electronic Equipment (WEEE) Directive

This symbol indicates that the product must NOT be disposed of as general industrial or domestic waste. This product should be disposed of through suitable WEEE disposal facilities. For more information about disposal of this product, contact your local authority, distributor or the manufacturer.

Information

Honeywell Analytics assumes no responsibility for equipment that is not installed and used following the procedures in the Technical Manual.

Ensure that the appropriate equipment has been installed. If in doubt, contact Honeywell Analytics.

Honeywell Analytics assumes no responsibility for errors or omissions in this document or the consequences of those errors or omissions. Contact Honeywell Analytics with corrections. Honeywell Analytics reserves the right to revise this document without notice. Contact the local distributor or Honeywell Analytics if additional information is needed.

XNX® is a registered trademark of Honeywell International.

Reflex™ is a trademark of Honeywell International.

HART® is a registered trademark of the HART Communication Foundation.

Modbus® is a registered trademark of Schneider Automation Inc.

FOUNDATION™ is a trademark of Fieldbus Foundation.

Unistrut® is a registered trademark of Unistrut Corporation.

Windows® is a registered trademark of Microsoft Corporation.

Revision History

Revision	Comment	Date
Rev 16	HAA200063	Sep 2020
Rev 17	ECN-00003063	Mar 2023
Rev 18	ECN-00230046	Jun 2024
Rev 19	ECN-00240060	Nov 2024

Contacting Honeywell Analytics

www.sps.honeywell.com

Europe, Middle East, Africa
Life Safety Distribution GmbH
Tel: 00800 333 222 44 (Freephone no.)
Tel: +41 (0)44 943 4380 (Alternative no.)
Middle East Tel: +971 4 450 5800 (Fixed Gas Detection)
Middle East Tel: +971 4 450 5852 (Portable Gas Detection)
gasdetection@honeywell.com

Americas
Honeywell Analytics Inc.
Tel: +1 847 955 8200
Toll free: +1 800 538 0363
detectgas@honeywell.com

Asia Pacific
Honeywell Co., Ltd.
Tel: +82 (0) 2 6909 0300
India Tel: +91 124 4752700
China Tel: +86 10 5885 8788-3000
analytics.ap@honeywell.com

Technical Services
EMEA: HAexpert@honeywell.com
US: ha.us.service@honeywell.com
AP: ha.ap.service@honeywell.com

Introduction

Product Description

The Transmitter

The transmitter is a comprehensive gas detection system designed to operate in hazardous locations[1] and utilize multiple sensor technologies –catalytic bead, electrochemical (EC), or infrared (IR)– to detect toxic gases, flammable gases, and oxygen depletion gas hazards. Each technology has a dedicated personality board.

Catalytic bead technology is used with the mV personality board. Catalytic bead sensors respond to a wide variety of combustibles so are typically used for flammable gas detection.

Electrochemical technology is used with the electrochemical board. EC sensors measure toxic gases in low concentrations. The EC sensors employ the patented Reflex™ cell fault diagnosis routine. Reflex checks for cell presence, cell dry-out, and cell open or short circuit. Reflex is automatically initiated by the transmitter at eight-hour intervals. It is also initiated on power up or sensor exchange. In the event of a cell failing this test, a sensor fault code is displayed. Reflex diagnostics occur in the first minutes of the power up sequence.

Infrared technology is used with the IR board. IR sensors optically absorb gases that fall into the infrared spectrum.

For additional information about any of these sensor types, refer to the applicable data sheet for the supported sensor in Figure 1.

The transmitter also allows for an optional communication board. There are three types of boards: relay, Modbus®, or FOUNDATION™ Fieldbus. See the Communications section for additional information.

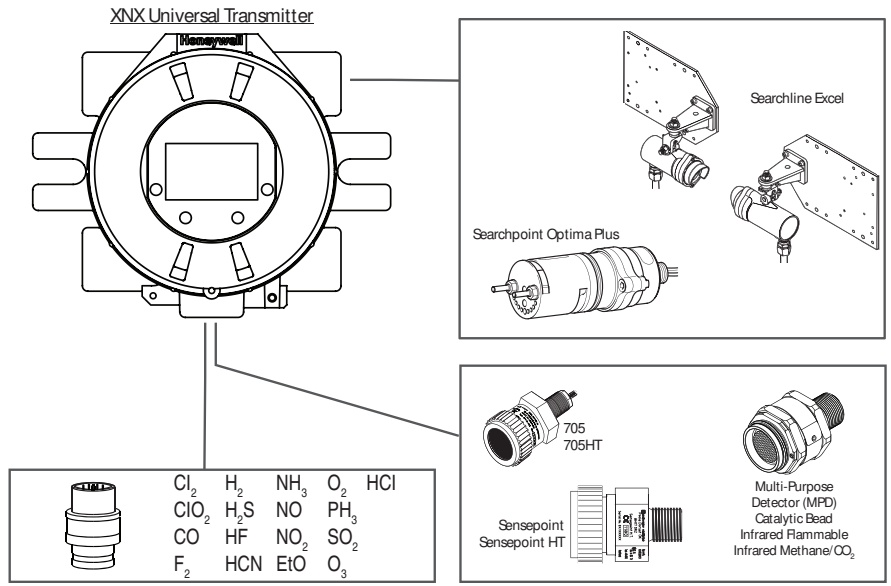

Personality	Sensor Type	Supported Sensors
IR	Point and Open-Path Infrared	Searchpoint Optima Plus, Searchline Excel
mV	Flammable and Toxic	705, 705HT, Sensepoint, Sensepoint HT, MPD (Catalytic Bead Flammable, IR Flammable and IR CO_2)
XNX EC	Toxic and O_2 Sensing	Electrochemical sensors, with Hot Swap, pre-calibrated through Intrinsically Safe (IS) barrier

Figure 1. XNX Universal Transmitter and supported sensing technologies

The transmitter relies on 4-20mA output, refreshed at least every two seconds (once per second is typical), in which the output is proportional to the gas concentration.

[1]There are three main types of gas hazards: flammable, toxic, and asphyxiant. A flammable gas hazard is one in which there is a risk of fire and/or explosion (e.g., a situation in which a gas such as methane, butane, or propane is present). A toxic gas hazard is one in which there is a risk of poisoning (e.g., a gas such as carbon monoxide, hydrogen sulfide, or chlorine is present). An asphyxiant hazard would include a risk of suffocation through oxygen deficiency. (Oxygen can be consumed or displaced by another gas.)

20 mA/HART Output

All XNX Transmitters provide a 20mA Current Loop with HART Communication which can be user configured for Sink, Source (3-Wire) or Isolated (4-Wire) electrical interface based on installation requirements.

The 20mA current loop output provides an analog indication of special states, a proportional output to gas concentration and overrange indication as shown in the table below. In the event of a simultaneous alarm and fault, an alarm condition will always override fault or warning state.

Output	Description*	Notes
1.0 mA	Fault	Special State Indication
2.0 mA	Warm-up Inhibit Bump Test Calibration	
3.0 mA	Warning	
4-20 mA	Gas Concentration	
21 mA	Overrange	

*Alarm conditions always take priority over faults and warnings.

HART Protocol provides communications with the transmitter from a remote control system for Configuration, Status, and Diagnostics. (See the HART Protocol section for additional information)

Communications

The XNX® Universal Transmitter is registered with the HART® Communication Foundation. The transmitter features HART over 4-20mA as standard.

Additional optional communication interfaces are available: relay communication, Modbus, or FOUNDATION Fieldbus. Each communication option has a dedicated option board. For additional information, refer to the Options section.

Certifications

XNX-UT**-****** Versions are UL and CSA listed for installation in Class I, Division 1, Groups A, B, C and D Hazardous Locations. FM Approvals evaluation includes Class I, Zone 1, Group IIC, as well as performance tests for specific sensor/transmitter combinations. The CSA or FM certification does not cover daisy-chained XNX combustible gas transmitters, the use of HART, Modbus, or FOUNDATION Fieldbus protocols for combustible gas performance. HART, Modbus, or FOUNDATION Fieldbus protocols can be used only for data collection or record keeping with regards to combustible gas. The EC cartridge[2] and EC remote mount kit are UL classified to Canandian and US standards.

XNX-AM **-***** versions are certified to comply with the European Community ATEX Directive/UKEX Regulation and the prescribed protection methods for installation in potentially explosive atmospheres.

XNX-BT**-***** versions are UL listed and INMETRO approved for compliance with both U.S. and Brazilian standards.

See the Sensor Data section for additional information on applicable approvals by part number and the Operating and Storage Conditions for Performance Tested EC Sensors section for marking.

[2]"Cartridge" and "sensor" are used interchangeably in this document.

Patents

Patents Applicable to the XNX Universal Transmitter		
Patent Number	**Description**	**Application**
6,123,818	Reflex patent	Implemented in XNX
6,251,232	Reflex patent	Implemented in XNX
6,351,982	Flammable sensor housing	XNX accepts this sensor
6,395,230	Pellistor	Sensor used in XNX
7,225,661	Gas calibration adapter	Applicable to XNX
7,716,962	Method of gas calibration	Used to calibrate XNX ECC cartridges

Glossary

Term	Description
bump test	a brief exposure to a gas to verify that a detector is working; also known as a functional test
ferrite bead	a device that suppresses noise in a circuit
FOUNDATION Fieldbus	an open architecture, digital, serial communication system administered by the Fieldbus Foundation
HART Protocol	Highway Addressable Remote Transducer Protocol; a bi-directional analog communication system developed by the HART Communication Foundation
intrinsic safety	design parameters for the safe operation of electrical equipment in hazardous environments; commonly abbreviated IS
IP rating	Ingress Protection; a system for describing a device's protection against dry materials and liquids (e.g., IP66/67)
latching alarm	an alarm that, once activated, must be manually reset
magnetic wand	a small device used to change the transmitter's settings
Modbus	a digital communications protocol based on RS-485 topology
non-latching alarm	an alarm that automatically resets when the cause of the alarm is removed
pellistor/bead	an electronic device used to detect combustible gases
personality board	a component of the transmitter that allows its operation to focus on different sensing technologies
POD	Personality, Options, and Display; the group of components including an XNX transmitter's personality board, display, communication board, etc.
span calibration	adjustment of a detector so that its scale corresponds to a gas concentration range from 0% to 100%
sticky gases	gases that tend to coat the surfaces they contact
toxic gases	gases that are poisonous to humans (refer to the gas's Safety Data Sheet for details)
zero calibration	adjustment of a detector so that its zero reading corresponds to a test gas concentration of 0%

Product Overview

The transmitter is comprised of these main parts:

Figure 2. XNX exploded view

Enclosure

Available in either Stainless Steel or Aluminum, with 3/4” NPT (UL/CSA or UL/ INMETRO) or M25 (ATEX/IECEx only) threaded cable/conduit ports, the transmitter enclosure is explosion-proof and suitable for use in -40°F to +149°F (-40°C to +65°C) operating conditions. A 5-coat marine finishing process provides the highest degree of corrosion protection. For more information on performance specifications, see the Specifications section.

The enclosure is equipped with up to five threaded cable/conduit ports providing functional and flexible configurations based on sensor and option choices. See Cable/conduit port assingments for port assignments and restrictions.

Stopping plugs (PN# 1226-0257 or 1226-0258) have been provided to seal unused cable/conduit ports and have been Agency evaluated/approved for use with the XNX enclosure only. The number of stopping plugs varies among available configurations.

CAUTION

Caution: The stopping plugs are for use only with the XNX transmitter. Do not use them with any other device.

Mounting lugs integral to the enclosure allow easy installation on a flat surface or 2”-6” (50-150 mm) diameter pipe with the optional Pipe Mount Kit or to ceilings with the Ceiling Mount Bracket Kit.

Cover

The transmitter cover is supplied in the identical material specified for the enclosure.

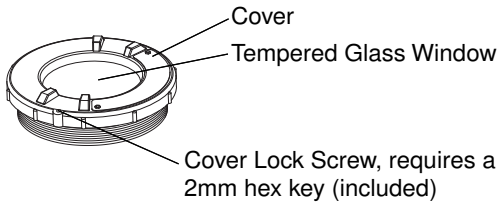

Figure 3. XNX cover components

A tempered glass window requires the use of the supplied magnetic wand/screwdriver to activate the four user interface switches located on the front of the display module. This allows for non-intrusive setup and operation.

A locking screw integrated into the cover provides positive locking that can be loosened by using the supplied 2mm hex key.

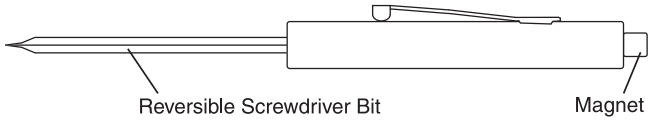

Figure 4. Magnetic wand/screwdriver

NOTE

Note: When attaching the cover or stopping plugs, coat the threads with a suitable anti-seize compound to prevent corrosion.

POD

The POD (**P**ersonality, **O**ptions, and **D**isplay) includes circuit boards for the personality module, optional interfaces, and display.

The personality module, or circuit board, determines the transmitter behavior based on the sensor type attached to the transmitter (electrochemical cell, catalytic bead sensor, or infrared) and provides the necessary interface. Connection to the attached sensor is made through the sensor connector.

The optional communication boards vary depending on the option selected when ordered. Only one of the three available interface options (relays, Modbus, or FOUNDATION Fieldbus) can be attached to the transmitter.

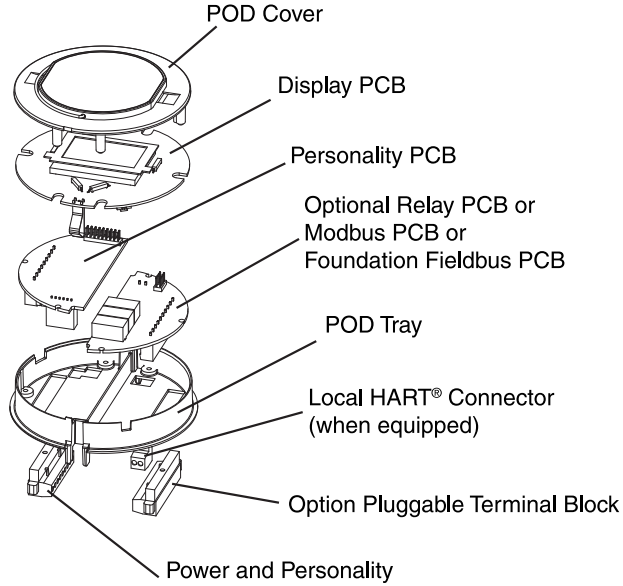

Figure 5. POD, exploded view

Options

Local HART

Available with any sensor technology or personality, an external access to the HART interface in the transmitter is provided. An intrinsically safe (IS) barrier inside the transmitter gives the user full control using a handheld field communicator for programming and configuration. The external interface is installed in the lower left cable/conduit port of the transmitter and is intrinsically safe. For more information, see the HART Protocol section.

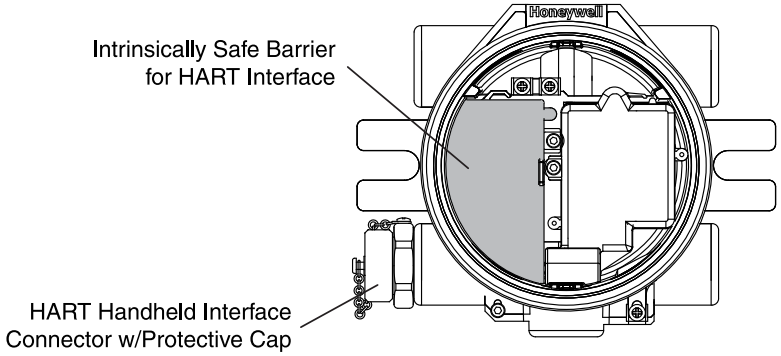

Figure 6. XNX Universal Transmitter with HART interface IS barrier

NOTE

Note: POD options are either relay, Modbus, or FOUNDATION Fieldbus.

Relays

The relay option (XNX-Relay) provides 3 form “C” (SPDT) normally open/normally closed (NO/NC) contacts for alarm and fault indication. A remote reset input (TB4) is provided to silence alarms. Momentarily closing the the circuit between the pins of TB4 performs the same function as the Reset Alarms & Faults command.

The remote reset switch (designated TB-4 and labeled “Remote Reset SW”) is located on the relay option board. It provides a remote hardware-based reset of faults and alarms to the transmitter. In the event that direct access to the local and HART® interfaces is not possible, alarms and faults from an XNX transmitter may be reset remotely using a momentary switch. This will momentarily close the circuit between the two pins of TB4, providing the same functionality as a Reset Alarms & Faults command performed from the main screen of thelocal user or the HART interfaces.

Relays are not available when the Modbus® or FOUNDATION Fieldbus options are installed.

The transmitter has three relays: relay 1 is for alarm level 1, relay 2 is for alarm level 2, and relay 3 is for faults and special states. Two alarm levels can be set, allowing, for example, a level 1 alarm for the immediate area when a certain gas concentration is detected and a plant-wide level 2 alarm when a greater gas concentration is detected.

The maximum refresh rate of the relays is 2 seconds. See the Set Alarm Values section for more information.

Modbus

The optional Modbus interface allows the transmitter to connect to a bus of devices and transmit data to PLCs or controllers. (For more information, see the *Modbus Protocol Manual*). Connections to the transmitter are made through a pluggable terminal block on the Modbus interface circuit board. Modbus RTU protocol uses ASCII/Hex protocols for communication.

FOUNDATION Fieldbus

FOUNDATION fieldbus is a digital communication system which supports several types of messages. Unlike many traditional systems which require a set of wires for each device, multiple FOUNDATION fieldbus devices can be connected with a single set of wires. FOUNDATION fieldbus overcomes some of the disadvantages of proprietary networks by providing a standardized network for connecting systems and devices.

NOTE

Note: FOUNDATION Fieldbus XNX transmitters require a separate power source and cannot be powered via the bus.

Accessories

Refer to the Accessories/Spares section for part numbers.

CAUTION

Caution: When used in excessively wet conditions, e.g. a hose-down, use of the Extreme Weather Protector is recommended. When used in dusty conditions, use of the Weatherproof Cap is recommended.

Pipe Mount Kit

The pipe mount kit allows the transmitter to be mounted to pipe from 2”-6” (50-150 mm) in diameter. The kit includes the pipe mount bracket, two carriage bolts, nuts, and lock washers.

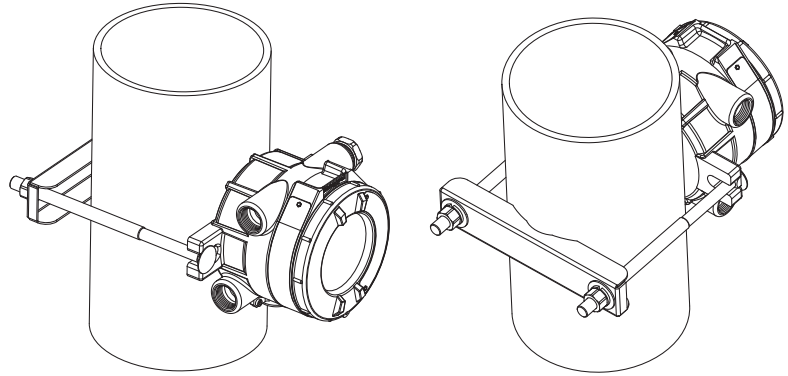

Calibration Gas Flow Adaptor (not part of the approval by DEKRA Testing and Certification GmbH)

The calibration gas flow adaptor is used to apply calibration test gas to the sensor. It attaches to the bottom of the sensor and can be fitted without removing the standard Weatherproof Cap. See the Calibration section for details on gas calibration.

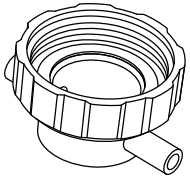

Weatherproof Cap

The weatherproof cap protects sensors from harsh weather.

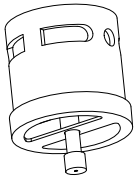

Remote Sensor Mounting Kit for EC Sensors

The remote sensor mounting kit allows EC sensors to be remotely mounted via an IS cable kit, available in various lengths. The kit includes shielded cable, cable glands, and remote terminal box. The cable can be cut to the required length then terminated at the remote terminal box.

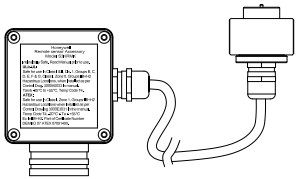

Collecting Cone

The collecting cone improves detection of lighter-than-air gases such as hydrogen and methane.

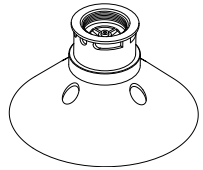

Ceiling Mount Bracket Kit

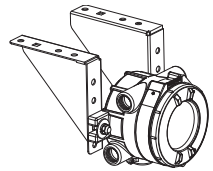

The optional ceiling mount bracket kit includes two stainless steel ceiling mount brackets, bolts, and nuts.

Remote Gassing Kit

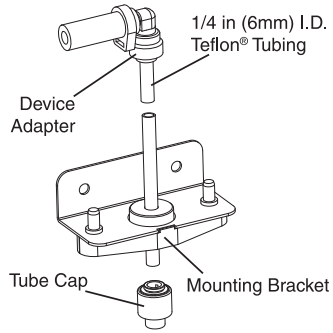

The remote gassing kit enables gas to be applied remotely for performing functional response checks (bump tests). The kit Includes: 50’ Teflon® tubing, a mounting bracket, a tube cap, and device adapters in 1/4” and 1/8” (6.3 mm and 3.2 mm) ID to attach to bump test ports on the weatherproof cap of the device.

Extreme Weather Protector

The extreme weather protector protects the sensor from environmental conditions in outdoor exposure applications.

Duct Mount Kit

The duct mount kit can be used with the EC sensor to detect O_2, CO, H_2, and H_2S gases in ducts. When combined with the MPD Interface Adapter (available separately), the duct mount kit can accommodate the MPD to detect flammable gases in ducts. The duct mount kit includes the adapter, gasket, and required fasteners. For MPD applications, order both the Duct Mount Kit and the MPD Interface Adapter.

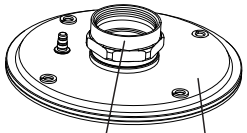

Sunshade

The sunshade is used in environments with high heat and/or direct sunlight. It protects the sensor from environmental conditions in outdoor applications, helping to keep the internal components within the specified temperature ranges. The sunshade can be mounted to 2-inch pipe or to a wall with suitable 6mm fasteners.

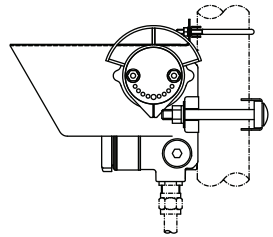

The Front Panel

The transmitter uses magnetic switches to enable non-intrusive operation. To activate a magnetic switch, hold the magnetic end of the screwdriver up to the glass window and slowly swipe the magnet directly over the switch area. For best results, hold the screwdriver as illustrated in Figure 7.

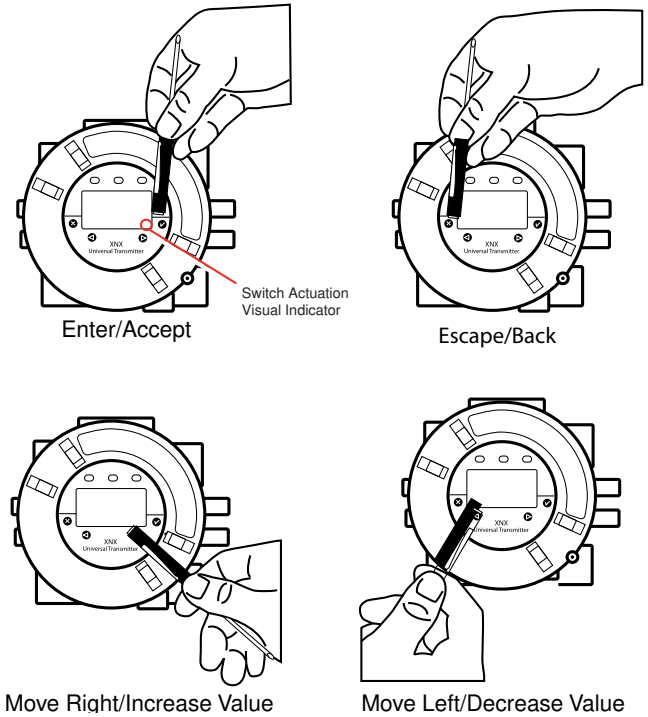

Figure 7. Using the magnetic wand

A visual indication of the switch actuation will appear in the lower right corner of the display each time the switch is activated.

In some menus where displayed values can be changed, the magnet must be swiped over the switch to cause the numeral on the display to advance through the available values. Use the ✪ switch to return to a previous menu or field.

For the purposes of this manual, the instruction to use ✓, ✪, ◄ or ►, means to activate the relevant magnetic switch as described above.

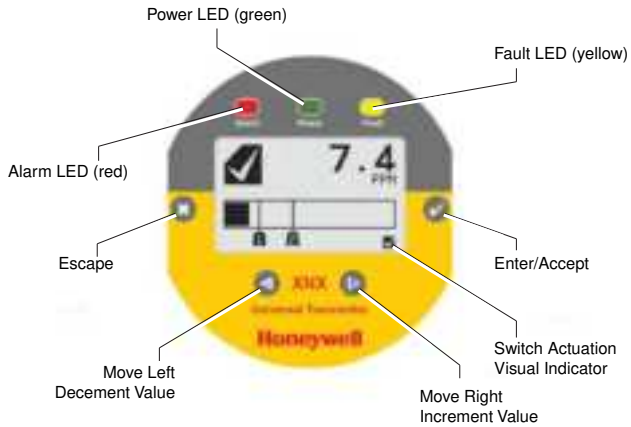

Figure 8. Front panel display of the transmitter

Controls and Navigation

Command	Description
Enter/Accept	The Enter/Accept switch is used to access menus, accept changes and to answer “yes” to system prompts.
Escape/Back	The Escape/Back switch is used to return to previous menus or to answer “no” to system prompts.
Move Left/ Decrease Value	The Left/Decrement arrow is used to move through menu options or decrease values when entering text or numbers.
Move Right/ Increase Value	The Right/Increment arrow is used to move through menu options or increase values when entering text or numbers.

The General Status Screen

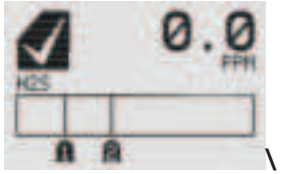

Figure 9. General Status screen[3]

The General Status screen shows the status of the transmitter. Warnings, faults, alarm levels, and current concentration levels are displayed continuously.

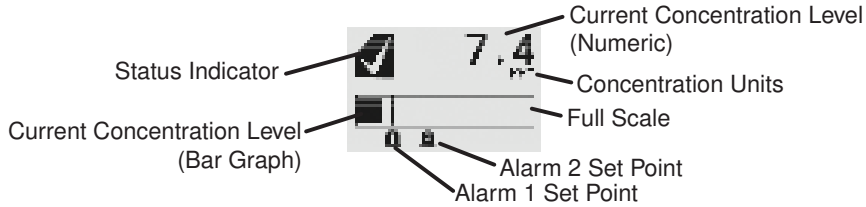

Figure 10. General Status screen, normal operating mode

The Normal Operating Mode icon indicates proper operation. The display also shows the concentration level of the target gas in two ways. In the first, a numeric value is shown in the upper right corner of the display in the units selected (ppm, %LEL, %VOL). The second concentration display is shown in the form of a bar graph representing the current concentration against full scale and in relation to the defined alarm levels. For more information on setting range and alarm levels, see the Range/Alarm Settings section. See the EC Sensor Performance Data, Factory Mutual Verified, EC Performance Data, Dekra Testing and Certification and the Other EC Sensors sections for negative drift and zero deviation values.

When a warning is triggered, the warning icon appears and information is displayed on the General Status Screen. The information displayed alternates between screens displaying the gas concentration and the warning code. See the Warnings and Faults section for more warning code information.

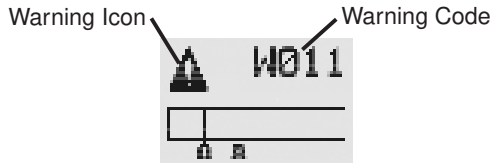

Figure 11. General Status Warning detail

[3]The LCD screen’s refresh rates are 500 milliseconds when the LCD heater is off and 1 second with the heater on.

If the fault icon ⊗ is displayed, a fault condition has been triggered and the display will alternate between the target gas concentration and the fault code. See the Warnings and Faults section for more fault code information.

Figure 12. General Status Fault detail

In the event of multiple warnings or faults, the user can view all messages with the transmitter's Event History function.

When an Alarm icon is displayed, the target gas concentration exceeds one or both preset alarm levels. The General Status Screen displays the gas concentration and the alarm level exceeded.

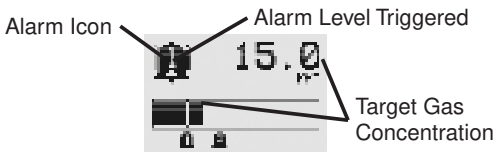

Figure 13. General Status Alarm detail

In an overrange condition, the alarm icon will display and the target gas concentration bar graph and alarm setpoints will flash.

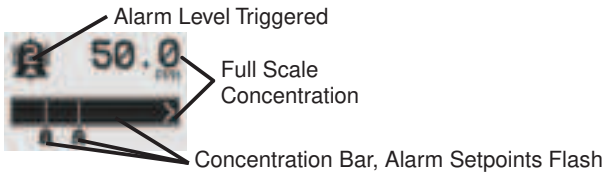

Figure 14. General Status Overrange detail

Negative values are not displayed and do not appear on the 4-20 mA output, but they are indicated by faults or warnings when preset thresholds are exceeded. (See zero deviation in the Specifications section).

In addition to the graphic alarm, fault, and warning indicators, the LEDs on the front panel flash in these patterns based on the condition:

Condition	LED[1]		
	Red	Green	Yellow
Alarm 1	Solid		
Alarm 2	Flashing		
Warning			Solid
Fault			Flashing[2]
Health		Flashing	

[1]The refresh rate of the LEDs is 0.5 second.

[2]Special states (Warmup, Inhibit) are not indicated by the Fault LED.

Entering the Menu

Swiping the magnet over the magnetic switch ✓ or ⊗ allows the user to reset faults or alarms, display current settings, or make adjustments to the device.

NOTE

Note: If the Easy Reset option is set to Lock, alarms and faults cannot be reset without logging in or entering a passcode. For more information, see the Configure Security section.

Swiping the ⊗ or "escape" magnetic switch activates the Alarm Reset screen and allows alarms to be silenced and faults to be reset.

The ✓ switch resets all alarms and faults and returns to the General Status screen. Use the ✕ switch to return to the General Status screen without resetting the alarms and faults.

Figure 15. Alarm Reset screen

Two authorization levels control access based upon the security level of the user: Level 1 (routine maintenance) and Level 2 (technician and password administrator). The default passcodes for both levels are “0000” and must be changed after installation to control access (see the Configure Security section). In general, access to neither security level restricts the user to viewing the transmitter’s display. If desired, the Easy Reset from Main Status option allows alarm and fault resets without requiring access to either security level.

Figure 16. Passcode screen

WARNING

Warning: The factory-set passcodes must be reset to prevent unauthorized access to the transmitter’s menus.

When the Passcode screen is displayed, the first passcode digit is highlighted. Use the switches to increase or decrease through the values. Once the correct value is displayed for the first digit, ✓ accepts the value and moves to the next digit or ✕ moves to the previous digit of the passcode.

Figure 17. Entering the passcode

Repeat for each of the remaining digits in the passcode. If the passcode is entered incorrectly, the Invalid Passcode screen is displayed and the user is returned to the General Status screen.

Figure 18. Invalid Passcode screen

Displaying Transmitter Information

While in the General Status display, swipe the magnet over the magnetic switch to display information about the transmitter. The General Status display will replace the bar graph in the lower portion of the screen with the unit's serial number, the date and time, and the unit's part number.

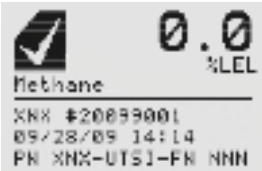

Figure 19. General Status Screen with unit information

Main Menu

Once the proper passcode has been entered, the transmitter displays the Main Menu.

Figure 20. The Main Menu

From the Main Menu, a Level 1 user can:

- display the current settings/configuration
- test the transmitter
- calibrate and bump test the transmitter
- configure the unit for language, date and time

The Main Menu consists of these options:

Menu		Description	See Section...
	Configure	Provides access to settings to configure the transmitter and connected devices	Configuring the Transmitter
	Test	Provides access to tools and settings to allow simulation of gas events to test the system	Test Menu
	Information	Displays current settings for the transmitter including optional relays and Modbus	Information Menu
	Gas Calibration	Displays the interface to calibrate sensors attached directly to the transmitter	Gas Calibration Menu

Menu Navigation

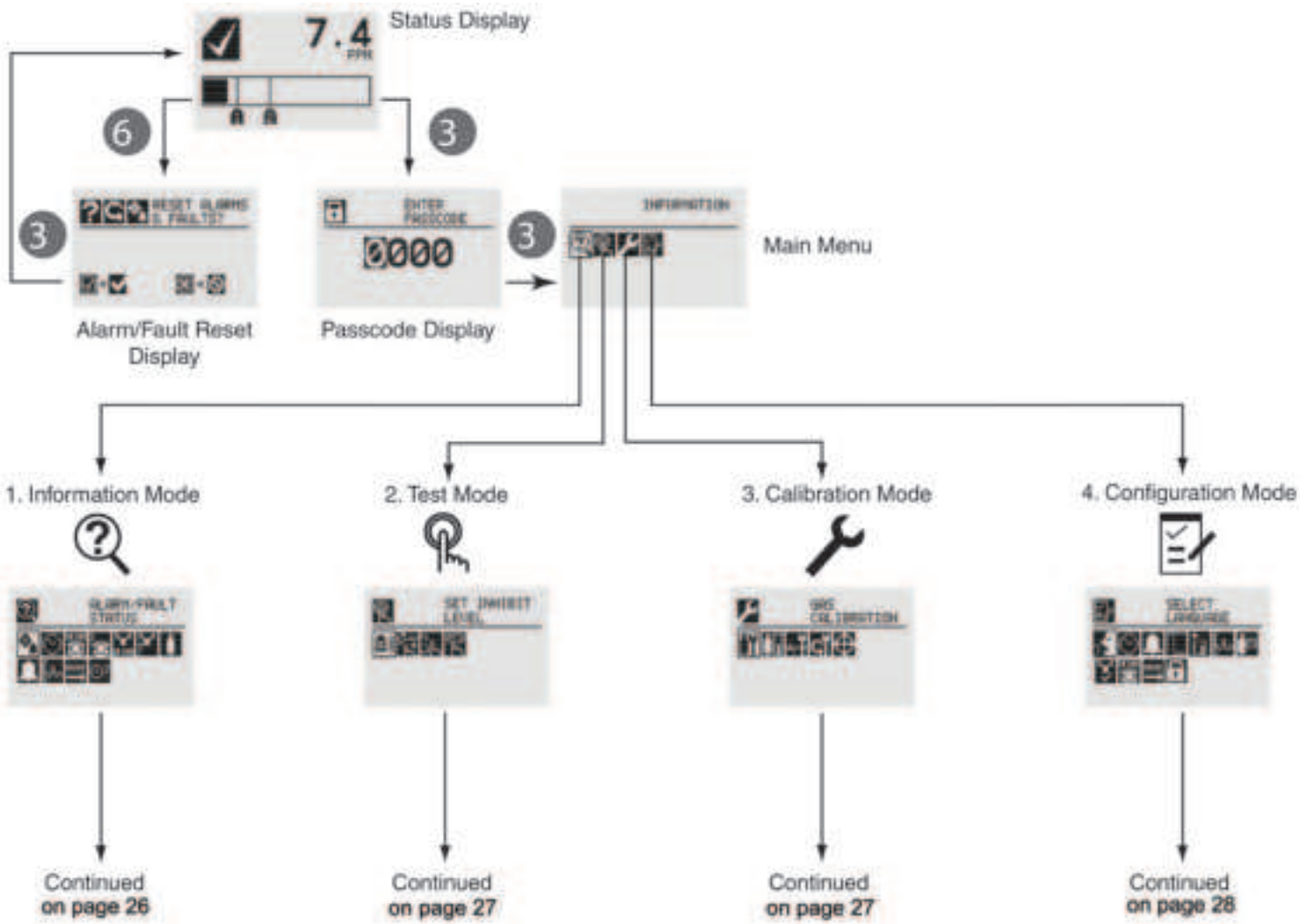

- Information Mode
  - Alarm/Fault Status
    - Alarm/Fault
      - Confirm Alarm/Fault Reset
      - Reset Alarm/Fault
  - Date & Time
  - Transmitter ID, Serial #, Revision
    - Transmitter Data
  - Transmitter Status
    - Transmitter Status
  - Sensor Type, Serial #, Revision
    - Sensor Data
  - Sensor Status
    - Sensor Status
  - Gas Name, ID, Range
    - Gas Data
  - Range Settings, Alarm Settings
    - Range/Alarm Settings
  - mA Level Settings
    - mA Level Settings
  - Relay Settings[4]
    - Relay Settings
  - Fieldbus Settings[5]
    - Fieldbus Settings
  - Event History
    - Increment Next/Previous Event
    - Increment Next/Previous Hour
    - Increment Next/Previous Day
    - Increment Next/Previous Alarm
    - Increment Next Previous Fault

4 Optional relay only

5 Optional FOUNDATION Fieldbus and Modbus only

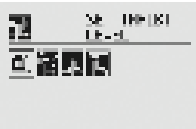

- Test Mode
  - Inhibit
    - Enable/Disable Inhibit
  - Force mA Output
    - Select Current: 0 to 22 mA
    - Accept
  - Force Relay[6]
    - Select Relay 1
    - Select Relay 2
    - Select Relay 3
    - Accept
  - Alarm/Fault Simulation
    - Alarm 1 Simulation
    - Alarm 2 Simulation
    - Warning Simulation
    - Fault Simulation

6 Optional relay only

- Calibration Mode
  - Gas Calibration
    - Enter Span Gas Concentration (Oxygen)
    - Enter Span Gas Concentration (Not Oxygen)
  - Bump Test
  - mA Output Calibration
    - Adjust 4 mA Output
    - Adjust 20 mA Output
  - Soft Reset[7]
  - Align Excel[8]

7 Searchpoint Optima and Searchline Excel only
8 Searchline Excel only

- Configuration Mode
  - Select Language
  - Set Date & Time
    - Set Date Format
    - Set Year, Month, Day
    - Set Hours, Minutes, Seconds
  - Sensor Type Selection
    - Set mV Sensor Type[9]
    - Set mA Sensor Type[10]
  - Gas Selection
    - Changing the Gas or Units Name
    - Gas Selections and Alarm Limits Based on mV Sensor Type
  - Range & Alarms
    - Set Range
    - Alarm 1 Type
    - Alarm 1 Setpoint
    - Alarm 1 Latching or Non-latching
    - Alarm 2 Type
    - Alarm 2 Setpoint
    - Alarm 2 Latching or Non-latching
    - Selecting the Numeric Format
  - Latching/Non-latching
  - Change Meas. Units[11]
  - mA Output Levels
    - Change mA for Inhibit
    - Change mA for Warning
    - Change mA for Overrange
    - Change mA for Low Signal
    - Change mA for Blocked Beam
  - Set Calibration Interval
  - Accept New Sensor Type[12]
    - Information screen identifying previous sensor and new sensor
    - Screen displays new type and old type
  - Set Beam Block[13]
    - Select Beam Block Threshold
    - Select Time to Beam Block
    - Select Time to Fault
  - Set Path Length[14]
    - Set New Path Length
  - Configure Unit ID
    - Edit ID
    - Clear ID
    - Default ID
  - Relay Options[15]
    - Select A1
    - Select A2
  - Fieldbus Options[16]
    - Change Fieldbus Address
    - Change Fieldbus Speed
  - Security
    - Reset and LVL1
    - LVL1 Code
    - LVL2 Code

9 Catalytic bead sensor only
10 Searchpoint Optima and Searchline Excel only
11 ECC and mV only
12 Electrochemical and catalytic bead sensors only
13 Searchline Excel only
14 Searchline Excel only
15 Optional relay only
16 Optional FOUNDATION Fieldbus and Modbus only

Installation and Operation

Sensor Mounting and Location

⚠ WARNING

Warning: Installation must be in accordance with the recognized standards of the appropriate authority in the country concerned.

Warning: Before carrying out any work, ensure that local regulations and site procedures are followed. Appropriate standards must be followed to maintain the overall certification of the sensor.

⚠ CAUTION

Caution: Locate transmitters and sensors in accordance with relevant local and national legislation, standards, and codes of practice.

Caution: Do not locate the transmitter where it will be exposed to direct sunlight.

Caution: Replace a detector only with another of the same type.

Caution: Mount detectors where the gas is most likely to be present.

When determining the placement of sensors, follow the advice of safety and engineering personnel and experts having specialist knowledge of gas dispersion, the process plant system, and the equipment involved. Record the agreement reached on the location of sensors. Consider these factors when locating gas sensors:

- possible damage caused by natural events such as rain or flooding
- ease of access for functional testing and servicing
- how escaping gas may behave due to natural or forced air currents.

Mounting the Transmitter

The transmitter can be mounted in a number of ways using the integral mounting tabs. The transmitter can be attached to flat wall surfaces or to Unistrut®. With the optional pipe mount kit, the unit can be mounted to pipe of diameter 2” to 6” (50 to 150mm). A ceiling mount bracket kit is also available.

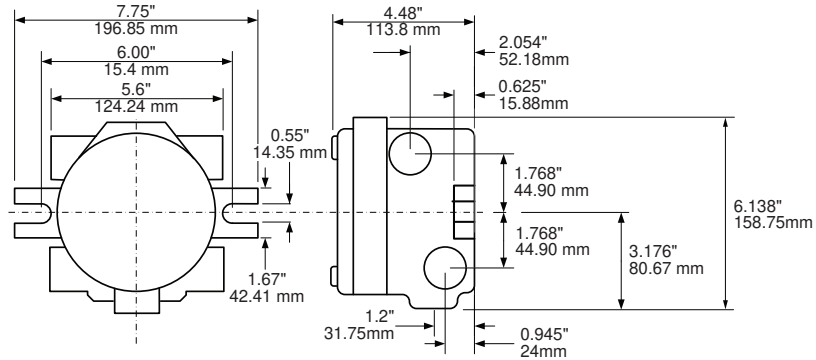

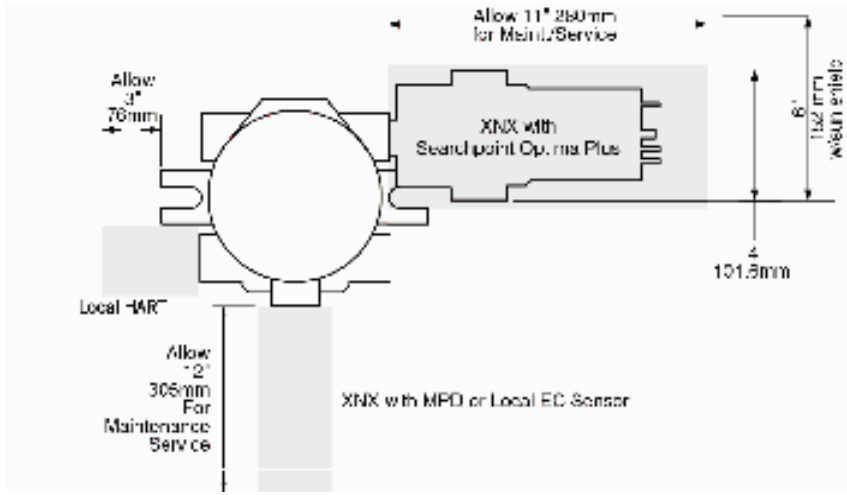

Figure 22. XNX Universal Transmitter mounting dimensions and clearances

WARNING

Warning: Any work on the interior of the detector must be conducted only by Honeywell-trained personnel

Warning: To reduce the risk of ignition in hazardous atmospheres, disconnect the equipment from the supply circuit before opening the sensor enclosure. Keep the assembly tightly closed during operation. Conduit runs must have a seal fitting connected within 18 inches (45 cm) of the enclosure.

Warning: Never open the XNX enclosure under power unless the area is known to be non-hazardous.

Warning: When the transmitter is equipped with the optional Remote Mount Kit, the remote sensor must be securely mounted in a fixed position. The Remote Sensor kit is not intended to be used as a handheld sensor.

NOTE

Note: Agency certifications require that EC and mV sensors face down. Optima sensors must be mounted horizontally.

The transmitter is configured with five cable/conduit ports built into the housing for wiring and mounting sensors. Figure 23 provides the guidelines to proper installation of the transmitter.

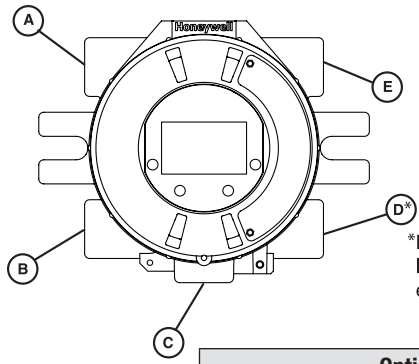

While relay wiring can use any available cable/conduit port in the enclosure, to avoid electrical noise do not use the same cable/conduit port for both relay reset and relay signal lines.

*Limited access due to IS barrier if equipped with electrochemical cell.

Option	Position
Local HART® Option	B
XNX Electrochemical Sensor - Local/Remote	C
MPD, 705 Series, Sensepoint Series	C
Searchpoint Optima Plus	A or E
Searchline Excel	Typically C
Remote Sensor Connection (except EC)	Any remaining
Searchpoint Optima Plus - Remote	Any remaining
Modbus	Any remaining
Relays	Any remaining
Foundation Fieldbus	Any remaining
Power	Any remaining

Figure 23. Cable/conduit port assignments

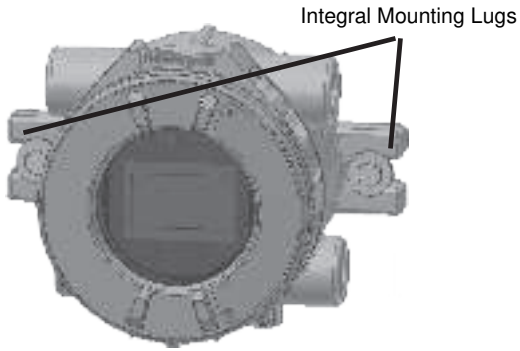

Figure 24. XNX Universal Transmitter mounting lugs

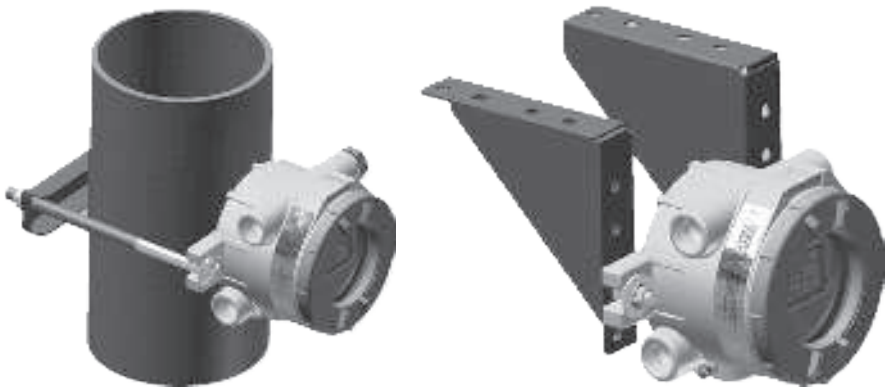

Figure 25. Optional pipe and ceiling mounts

Wiring the Transmitter

The transmitter is available in sensor technologies, or personality options, which support a variety of sensors and applications. Each of the personalities use a dedicated interface board. Pluggable terminal blocks are used for easy connection and service. The personality boards and optional communication interfaces are enclosed in plastic housings comprising the electronics POD (Personality, Options, and Display). The Personality circuit board determines the transmitter's behavior based on the type of sensor attached to the interface. See Specifications for drift and zero deviation values.

This table illustrates the three transmitter configurations and the sensors supported by each.

XNX IR Personality		XNX EC Personality
Searchline Excel	Searchpoint Optima Plus Local/ Remote	XNX EC Sensor
Generic mA Sensors		XNX EC Sensor Remote Mount Kit

XNX mV Personality		
705 Local / Remote	MPD Local (cat bead and IR)	Sensepoint Local / Remote
705HT Local / Remote	MPD Remote	Sensepoint PPM Local/Remote
		Sensepoint HT Remote

Figure 26. XNX Transmitter personalities

CAUTION

Caution: Before wiring the transmitter, confirm that the correct personality and communication boards are installed.

General Wiring Considerations

For proper operation of the transmitter and sensor technologies, consideration of wiring-induced voltage drops, transient electrical noise, and dissimilar earth ground potentials is imperative in the design and installation of the system.

WARNING

Warning: The sensor must be earthed/grounded for intrinsic safety, electrical safety and to limit the effects of radio frequency interference. Earth/ground points are provided inside and outside the unit. EMI note for applications using shielded cable: Cable shield must provide 90% coverage of the wiring. Cable shield terminations must be made at the cable glands with suitable EMI type glands. Avoid terminating cable shields at the Earth ground lug inside the XNX enclosure. In cases where wiring is in pipe, a shielded cable is not required. The external terminal is only a supplemental bonding connection where local authorities permit or require such a connection.

Loading

When wiring for DC power, 4-20mA signal, remote wiring to sensors must be sized sufficiently to provide adequate voltages for the line length and the loads that will be used.

The use of high inrush or inductive loads may affect the performance of the transmitter. For best reliability use resistive loads only.

Isolation

Isolate the power and signal-carrying conductors.

Circuit Protection

Supply circuits must provide over-current protection. Consider inrush current in specifying any DC supply. Power supply range is 16 to 32 VDC for EC and mV versions, 18 to 32 VDC for Searchpoint Optima Plus and Searchline Excel, and 16 to 32 VDC depending on the limitations of the device for the generic 4-20mA input.

Distance Considerations for Installation

Adequately powering the transmitter is the factor that determines an installation's maximum distance. The 4-20 mA output signal will easily handle the distance back to the control equipment.

The primary factors determining distance are the minimum operating voltage of the transmitter and/or sensor; the maximum current draw of the transmitter/sensor, the resistance of the wire used, the power supply voltage, and the current capacity of power supply. An additional consideration is the type of installation; specifically, how many transmitters/sensors are drawing power from the same power supply and whether these transmitters are using the same pair of wires ("daisy-chained") or have their own connections.

Types of Installations

There are three basic types of installation: a single transmitter; multiple transmitters connected to a single power source; and multiple transmitters connected in a “daisy-chain” configuration.

Single Transmitter

This is the simplest type of installation. It consists of a single XNX transmitter installation per power source.

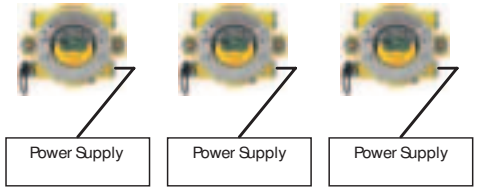

Figure 27. Single transmitter installation

Advantages:

- Maximum distance between power source and transmitter
- Smaller power source
- If a power source fails, only one monitoring point fails.

Disadvantage:

- Multiple transmitters require multiple power sources.

Multiple Transmitters Connected to a Single Power Source

This is two or more transmitters sharing a single power source with each transmitter having its own dedicated wiring to the power source.

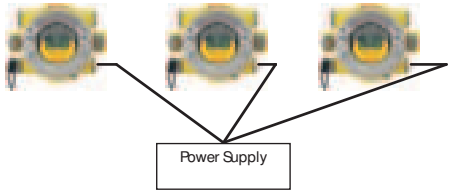

Figure 28. Multiple transmitters powered by a single power supply

Advantages:

- Maximum distance between power source and transmitters
- Fewer power sources.

Disadvantages:

- Larger power source will be needed
- If a power source fails, several monitoring points fail.

Multiple Transmitters Connected in a “Daisy-Chain” Configuration

This configuration consists of two or more transmitters installed in a line. The power connections are installed as an extension of the previous transmitter, with the first transmitter being the only one actually wired to the power source.

Figure 29. Daisy-chained transmitters from one power supply

Advantages:

- Less wire needed for installation
- Fewer power sources.

Disadvantages:

- Requires a larger power source
- Shorter distance between power source and transmitters.
- If a power source fails, several monitoring points fail.

NOTE

Note: CSA/FM certification does not cover daisy-chained XNX combustible gas transmitters.

Power Source Selection

For each type of installation, selection of power supply is important. Power supplies are rated by voltage and power. The nominal voltage for all XNX transmitters is 24V with the power required depending on the number of points using the same power supply.

As a general guideline, the power supply should be capable of providing more power than is required by the installation. A 10 watt power supply is fine for a single XNX mV with catalytic sensor (6.5 watts required, see the following table) but is inadequate for a single XNX IR with Searchpoint Optima Plus (10 watts required).

XNX Universal Transmitter Maximum Power Consumption				
Configuration	-40°C to +65°C		-10°C to +65°C	
	HART over 4-20mA (watts)	HART over 4-20mA with Relay, Modbus®, or Foundation™ Fieldbus (watts)	HART over 4-20mA (watts)	HART over 4-20mA with Relay, Modbus, or Foundation Fieldbus (watts)
transmitter with toxic sensors	5.1	6.2	3.4	4.5
transmitter with catalytic sensors	5.4	6.5	3.7	4.8
transmitter with infrared cartridge	5.4	6.5	3.7	4.8

XNX Universal Transmitter Maximum Power Consumption				
Configuration	-40°C to +65°C		-10°C to +65°C	
	HART over 4-20mA (watts)	HART over 4-20mA with Relay, Modbus®, or Foundation™ Fieldbus (watts)	HART over 4-20mA (watts)	HART over 4-20mA with Relay, Modbus, or Foundation Fieldbus (watts)
transmitter with Searchpoint Optima Plus	8.6	9.7	6.9	8.0
transmitter with Searchline Excel	12.1	13.2	10.4	11.5

To determine the wattage required, add the maximum power requirements of all the points that will share the power supply. For example, consider a system with two XNX mV transmitters with catalytic sensors (6.5 watts each) and one XNX IR with Searchpoint Optima Plus (10 watts). A 25 watt power supply would probably handle this installation, but a 30 watt power supply would be a better choice.

Wire Selection

The type of wire used for connections has an effect on the distance of the installation. This is because some of the voltage is dropped across the cable between the power supply and the transmitter.

Thinner wire (i.e., 18 AWG) will lose more voltage than thicker wire (i.e., 12 AWG). The amount of voltage lost depends on how much current is being drawn through the wire; more current means more loss. If too much voltage is ropped across in the wiring, there may not be enough at the distant point to allow the transmitter to operate.

Single Transmitter Distances

For installations that have dedicated wiring between the transmitter and the power supply, use the following chart. These distances assume stranded wire is used. If multiple transmitters are using the same power supply, make sure the power supply wattage rating is high enough to power all transmitters simultaneously.

Figure 30. Single transmitter distances

Single Transmitter Distances				
Configuration	**18 AWG [1.0 mm2]**	**16 AWG [1.5 mm2]**	**14 AWG [2.0 mm2]**	**12 AWG [3.5 mm2]**
transmitter mV or EC with sensor	1140 feet [347 meters]	1810 feet [551 meters]	2890 feet [880 meters]	4620 feet [1408 meters]
transmitter IR with Searchpoint Optima Plus	660 feet [201 meters]	1060 feet [323 meters]	1690 feet [515 meters]	2690 feet [820 meters]
transmitter IR with Searchline Excel	550 feet [168 meters]	890 feet [270 meters]	1410 feet [430 meters]	2260 feet [690 meters]

Daisy-Chained Transmitter Distances

It is difficult to calculate distances for this configuration. There are many factors to be considered: distance from control room to first transmitter, distance between transmitters, sensor types, etc. A few scenarios are presented here to provide a base to work from.

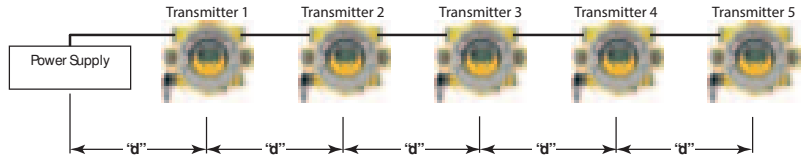

Figure 31. Daisy-chained transmitter distances

1. Several transmitters equally spaced from themselves and the power source.

2 Transmitters - Distance "d"				
Configuration	**18 AWG [1.0 mm2]**	**16 AWG [1.5 mm2]**	**14 AWG [2.0 mm2]**	**12 AWG [3.5 mm2]**
transmitter mV or EC with sensor	380 feet [115 meters]	600 feet [183 meters]	960 feet [292 meters]	1540 feet [469 meters]
transmitter IR with Searchpoint Optima Plus	220 feet [67 meters]	350 feet [106 meters]	560 feet [170 meters]	900 feet [274 meters]
transmitter IR with Searchline Excel	185 feet [56 meters]	295 feet [90 meters]	470 feet [143 meters]	750 feet [229 meters]

3 Transmitters - Distance "d"				
Configuration	18 AWG [1.0 mm2]	16 AWG [1.5 mm2]	14 AWG [2.0 mm2]	12 AWG [3.5 mm2]
XNX mV or EC With Sensor	190 feet [58 meters]	300 feet [91 meters]	480 feet [146 meters]	770 feet [234 meters]
XNX IR with Searchpoint Optima Plus	110 feet [33 meters]	175 feet [53 meters]	280 feet [85 meters]	450 feet [137 meters]
XNX IR with Searchline Excel	90 feet [27 meters]	145 feet [44 meters]	235 feet [71 meters]	375 feet [114 meters]

4 Transmitters - Distance "d"				
Configuration	18 AWG [1.0 mm2]	16 AWG [1.5 mm2]	14 AWG [2.0 mm2]	12 AWG [3.5 mm2]
XNX mV or EC With Sensor	110 feet [33 meters]	180 feet [55 meters]	290 feet [88 meters]	460 feet [140 meters]
XNX IR with Searchpoint Optima Plus	65 feet [20 meters]	105 feet [32 meters]	165 feet [50 meters]	270 feet [82 meters]
XNX IR with Searchline Excel	55 feet [17 meters]	85 feet [26 meters]	140 feet [43 meters]	225 feet [68 meters]

5 Transmitters - Distance "d"				
Configuration	18 AWG [1.0 mm2]	16 AWG [1.5 mm2]	14 AWG [2.0 mm2]	12 AWG [3.5 mm2]
XNX mV or EC With Sensor	75 feet [23 meters]	120 feet [36 meters]	190 feet [58 meters]	300 feet [91 meters]
XNX IR with Searchpoint Optima Plus	45 feet [13 meters]	70 feet [21 meters]	110 feet [33 meters]	180 feet [55 meters]
XNX IR with Searchline Excel	35 feet [11 meters]	55 feet [17 meters]	90 feet [27 meters]	150 feet [46 meters]

2. Several transmitters installed in pairs with each pair equally spaced from the next pair and the power source. These distances assume the paired transmitters are installed within 10 feet [3 meters] of each other.

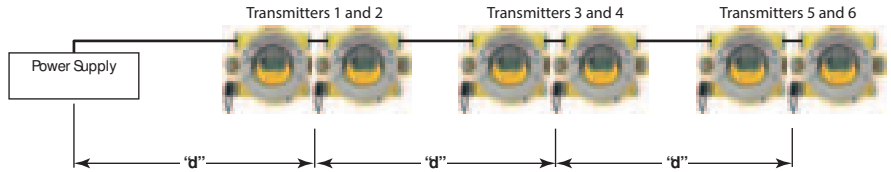

Figure 32. Transmitters in pairs

2 Transmitters - Distance "d"				
Configuration	18 AWG [1.0 mm2]	16 AWG [1.5 mm2]	14 AWG [2.0 mm2]	12 AWG [3.5 mm2]
XNX mV or EC With Sensor	485 feet [147 meters]	775 feet [235 meters]	1230 feet [292 meters]	1970 feet [600 meters]
XNX IR with Searchpoint Optima Plus	380 feet [115 meters]	600 feet [180 meters]	960 feet [290 meters]	1540 feet [470 meters]
XNX IR with Searchline Excel	280 feet [85 meters]	440 feet [134 meters]	700 feet [213 meters]	1130 feet [344 meters]

4 Transmitters - Distance "d"				
Configuration	18 AWG [1.0 mm2]	16 AWG [1.5 mm2]	14 AWG [2.0 mm2]	12 AWG [3.5 mm2]
XNX mV or EC With Sensor	190 feet [58 meters]	300 feet [91 meters]	480 feet [146 meters]	770 feet [234 meters]
XNX IR with Searchpoint Optima Plus	110 feet [33 meters]	175 feet [53 meters]	280 feet [85 meters]	450 feet [137 meters]
XNX IR with Searchline Excel	90 feet [27 meters]	145 feet [44 meters]	235 feet [71 meters]	375 feet [114 meters]

6 Transmitters - Distance “d”				
Configuration	18 AWG [1.0 mm2]	16 AWG [1.5 mm2]	14 AWG [2.0 mm2]	12 AWG [3.5 mm2]
XNX mV or EC With Sensor	95 feet [33 meters]	150 feet [45 meters]	240 feet [73 meters]	385 feet [117 meters]
XNX IR with Searchpoint Optima Plus	55 feet [17 meters]	85 feet [26 meters]	140 feet [42 meters]	225 feet [68 meters]
XNX IR with Searchline Excel	45 feet [14 meters]	70 feet [21 meters]	115 feet [35 meters]	185 feet [56 meters]

Ensure that wiring is adequately protected from mechanical damage during installation. Shorted or open-circuit wiring to an MPD **I** sensor may result in a full-scale concentration reading before the transmitter’s internal diagnostics can identify the external installation fault.

POD Connections

This illustration shows the connections available on of the terminal blocks for each type of personality board.

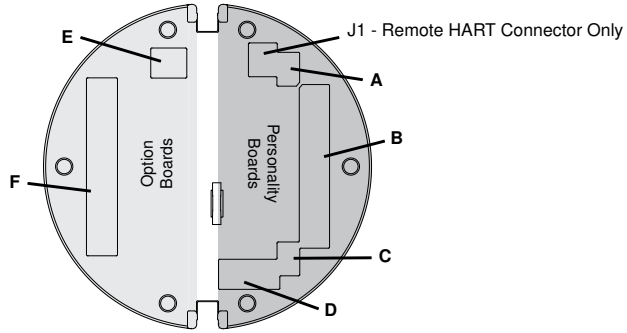

Figure 33. Personality board terminal block legend

Each of the personalities uses a single terminal block for connection with the exception of the IR personality, which features a second terminal block.

The personality boards also provide a dedicated pair of jumper switches to define output of the transmitter as isolated 4-20mA, Sink 20mA, or Source 20mA as well as a service jumper to allow power to the loop to continue when the transmitter is being serviced. A separate connector is used to activate local HART (see the Local HART Interface section).

Local HART provides an external access to control the transmitter. An intrinsically safe (IS) barrier inside the transmitter allows the user to attach an external handheld field communicator for programming and configuration. The external interface is intrinsically safe. It is installed in the transmitter’s lower left cable/conduit port.

Table A				
Board Type	**Function**		**S1**	**S2**
EC Personality	4-20mA Output	Source	▼	▲
mV Personality		Sink	▲	▼
IR Personality		Isolated	▼	▼

Table B		
Board Type	**Connection**	**Function**
EC Personality	TB1	Power, 4-20mA
mV Personality		Power, 4-20mA, Sensor
IR Personality		Power, 4-20mA, IR Power and Signal

Table C				
Board Type	**Function**		**S3**	**S4**
IR Personality	IR 4-20mA Input	Source	▼	▼
		Sink	▲	▲

Table D		
Board Type	**Connection**	**Function**
EC Personality	J2	EC IS Barrier
IR Personality	TB2	Com A and B

Table E		
Board Type	**Connection**	**Function**
Relay	TB4	Remote Reset Connector
Modbus	SW5	Bus Loop Terminators
Foundatin Fieldbus	SW5	Simulation Mode

Table F		
Board Type	**Connection**	**Function**
Relay	TB3	Relay Output
Modbus	TB3	Data Connection
Foundation Fieldbus	TB3	Data connection

NOTE

Note: Open loop faults are not available due to HART, Modbus, and FOUNDATION Fieldbus interfaces where a 4-20 signal cannot be used. In this case, open loop, 0mA must be used as the diagnostic.

The Option circuit boards vary depending upon the option selected when ordered. Only one of the three available interface options (relays, Modbus, or FOUNDATION Fieldbus) can be attached to the transmitter. When installed, connections to the options are made to connectors at the bottom of the POD.

4-20mA Output, Common Connections, and Power Settings

WARNING

Warning: Power off the transmitter before changing S3 or S4. Failure to do this will permanently damage the transmitter. Both switches must be set in either Source or Sink prior to applying power.

The transmitter allows the user to configure the 4-20mA output to Sink, Source, or Isolated mode operation via two programming switches on the POD[1]. The Switch Configuration table shows the S1 and S2 setting and corresponding output configuration.

Switch Configuration		
Mode	**S1**	**S2**
Source	Down	Up
Sink	Up	Down
Isolated	Down	Down

Most controllers in the market will accept source-configured devices. Sink-configured signals are used in older technology controllers, which reduce the need for complete system upgrades. In isolated-signal devices, if the controller fails or the mA signal wires are disconnected or broken, the field device will remain operational. Most controllers in the market will accept isolated configured devices.

Power and 4-20mA connections are made at TB-1 and are identical for the EC, IR, and mV Personality Boards. For user convenience, a second set of +Ve and -Ve power terminals have been provided to eliminate the need for a secondary junction

1 The 4-20 mA output state is refreshed at least every two seconds (once per second is typical).

box in multi-node systems when used with the supplied terminal jumpers. These jumpers enable an electrical connection without connecting to the Personality Board. Install them between pins 1 and 2 and between pins 3 and 4 to support multi-node wiring.

Keep the total load resistance for the 4-20mA between 200 and 400Ω, including the resistance of the properly selected 4-20mA cable and input impedance of the equipment to be connected.

Failure to perform 'Calibrate mA Output' or with loads outside the recommended values may result in a diagnostic warning or fault messages.

If the 20 mA output is not used, a 500 ohm resistor must be installed.

The transmitter's power consumption is dependent on the sensor and options for the specific configuration. For proper operation, the input voltage must be maintained between 16 and 32 VDC for EC and mV units and between 18 to 32 VDC for IR units.

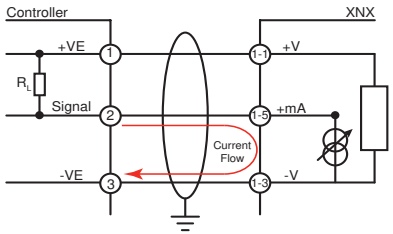

Figure 34. Sink wiring

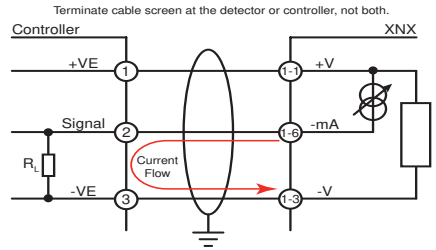

Figure 35. Source wiring

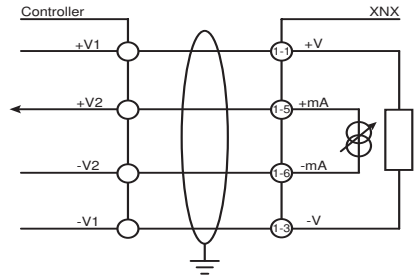

Figure 36. Isolated wiring

Labels applied to the back of the POD identify each of the connection points.

NOTE

Note: Pins 2 and 4 of terminal block TB1 have no internal connection on the personality board. When used with the terminal block jumpers, pins 2 and 4 can provide additional 4-20mA connections or supply power for daisy-chained units.

NOTE

Note: FOUNDATION Fieldbus XNX transmitters require a separate power source and cannot be powered via the bus.

FOUNDATION Fieldbus Wiring

FOUNDATION Fieldbus connections to the transmitter are made through a pluggable terminal block on the FOUNDATION Fieldbus option board, shown in Figure 38. A simulation switch (SW5) is included on the board to enable/disable simulation mode. Terminals 3-1 through 3-4 are provided to facilitate bus wiring; there is no internal connection to other XNX circuitry. Terminal 3-1 is connected internally to 3-2. Similarly, terminal 3-3 is connected internally to 3-4.

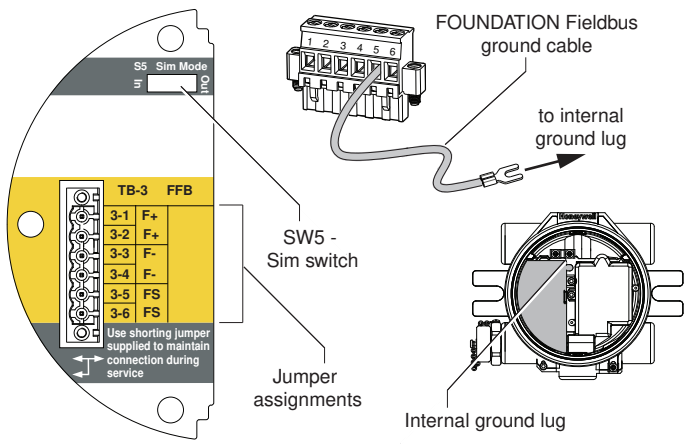

Figure 37. FOUNDATION Fieldbus option board and terminal block

Terminal Block Connections

Connections to the transmitter are made via pluggable terminal blocks secured to the back of the POD. The terminal blocks are keyed and polarized. A color coded label assists in wiring when the block is removed from the POD.

The terminals are suitable for use with 12 to 28 AWG or 0.8 to 2.5 mm^2 wire. Wire insulation must be stripped 5/16” (8 mm). Tighten each terminal to a maximum of 4.5 in-lbs (0.51 Nm). Up to four terminal blocks are provided; each having 2, 6, 9, or 10 positions.

Two terminal block jumpers are included to provide an electrical connection without connection to the Personality Board. Install the jumpers between pins 1 and 2 and between pins 3 and 4 to support multi-node wiring.

WARNING

Warning: When the transmitter is equipped with the optional Remote Mount Kit, the remote sensor must be securely mounted in a fixed position. The Remote Sensor kit is not intended to be used as a handheld sensor.

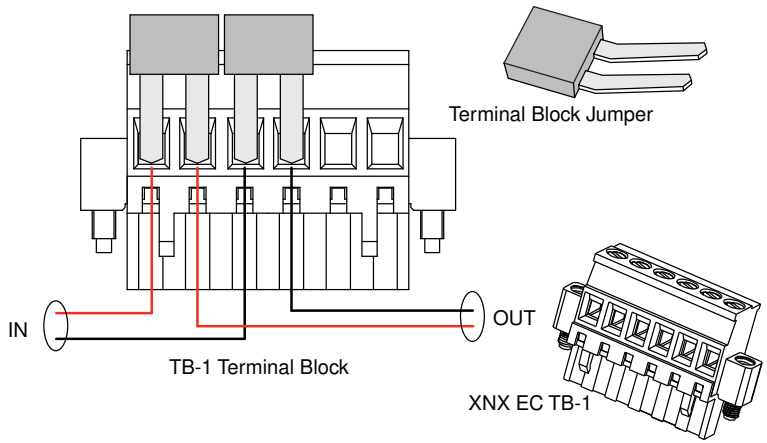

Figure 38. Pluggable terminal block and terminal block jumper

EC Personality Wiring

CAUTION

Caution: Do not force the POD into the enclosure. Doing so may result in damage to the wiring or the POD or may alter the switch settings. If resistance is felt, wires may be preventing the POD from being properly positioned.

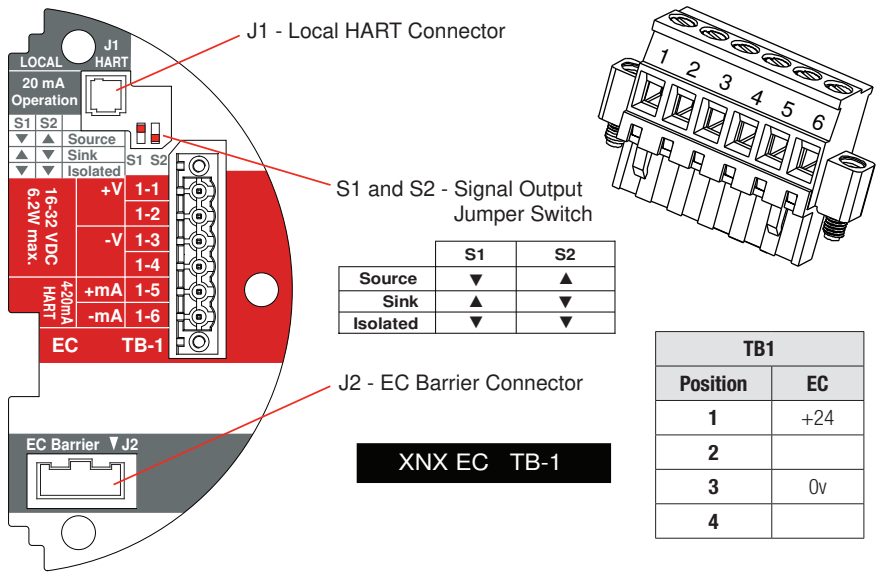

	S1	S2
Source	▼	▲
Sink	▲	▼
Isolated	▼	▼

TB1	
Position	EC
1	+24
2	
3	0v
4	

Figure 39. XNX EC personality board terminal blocks and jumper switches and terminal block assignments

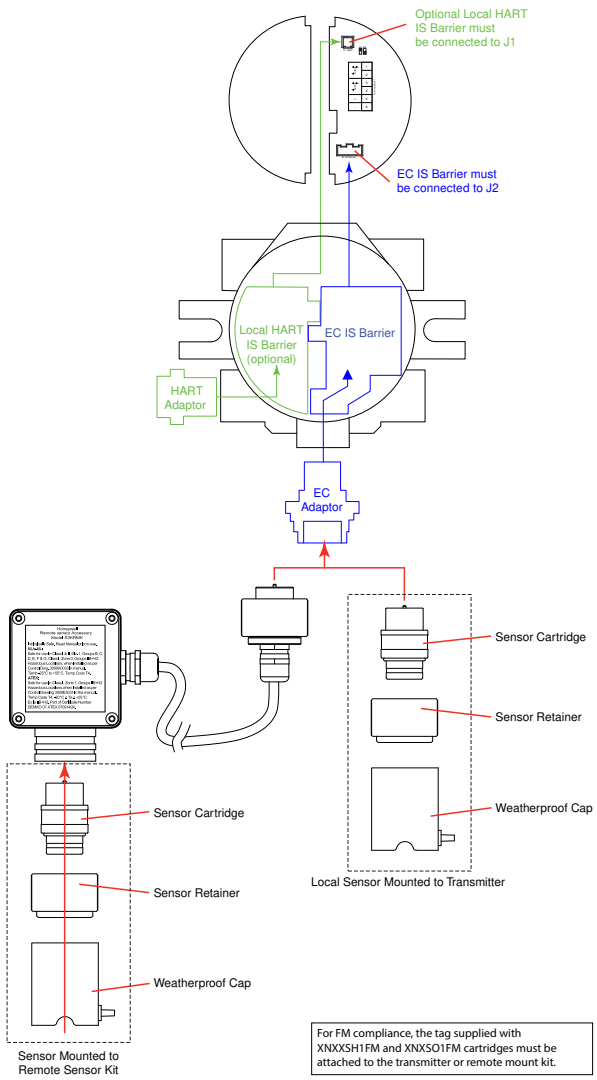

Figure 40. EC personality wiring

Electrochemical Sensor Installation

CAUTION

Caution: A missing oxygen cell will result in 0% V/V O2 gas concentration, thus triggering alarm events. In this situation, check the connection of the EC cell to the sensor connector board.

Caution: For biased sensors (e.g., nitrogen dioxide) remove the sensor stabilizer from the bottom of the sensor prior to installation.

Using the Installing plug-in sensor illustration as a guide, follow this procedure:

1. Verify that the label on the new sensor is the correct gas type.
2. Unscrew the Weatherproof Cap, loosen the retainer locking screw with the supplied hex key, and unscrew the sensor retainer.
3. Plug in the new sensor. Take care to align the sensor pins with the connector.
4. Refit the sensor retainer, tighten the locking screw with the hex key, and refit the Weatherproof Cap. Countdown time of up to 180 seconds (depending on the sensor type) will be displayed.
5. Acknowledge the gas type (required before proceeding). For more information on setting gas type, see the Gas Selection section.
6. After the sensor is installed and the gas type is confirmed, the range, alarm levels, and other important settings must be set; see the Configuring the Transmitter section.
7. After the transmitter has been configured, calibrate the sensor following the procedures in the Calibration section.

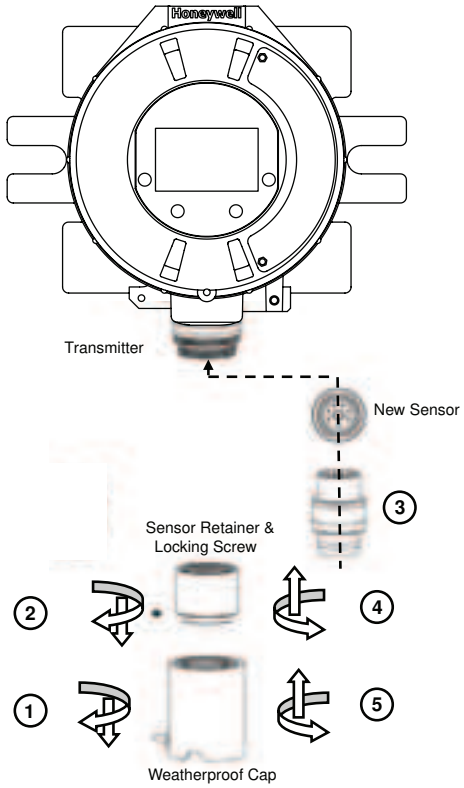

Figure 41. Installing plug-in sensor

NOTE

Note: Refer to control drawings 3000E3157 and 3000E3159 for the installation requirements and the remote mounting of EC cells.

EC Sensor Remote Mounting Kit

The remote sensor mounting kit is used to mount the EC sensor away from the transmitter. To mount the sensor remotely, follow this procedure:

1. Unscrew the Weatherproof Cap, loosen the retainer locking screw and unscrew the sensor retainer.
2. Remove the sensor by pulling (without twisting).
3. Plug the remote sensor cable connector into the bottom of the transmitter and secure the retainer.
4. Route the cable to the location where the remote sensor is to be mounted.
5. Optional: make a loop of cable at the junction box. This will provide some excess for future re-terminations.
6. If necessary, cut the cable to the required length.

CAUTION

Caution: Do not cut the cable too short. Once cut, additional lengths of cable cannot be added as this will invalidate the intrinsically safe certification.

WARNING

Warning: Enclosures of remotely mounted sensors contain aluminum. Be careful to avoid ignition hazards due to impact or friction when installed in Zone 1 locations.

7. Mount the remote sensor junction box, allowing enough room below to fit the sensor and Weatherproof Cap. See control drawing 3000E3159 in the Remote Sensor Mount section for specific mounting information.

8. Attach the cable to the remote terminal box via the gland provided.
9. Make the connections as shown in the Installing a remote sensor mounting kit illustration on the next page.
10. Fit the Terminal box lid.
11. Plug the sensor into the socket at the bottom of the terminal box.
12. Fit the sensor retainer, tighten the locking screw, and fit the Weatherproof Cap.
13. Calibrate the sensor following the procedure in the Zero and Span Calibration for EC Sensors, mV Sensors, and Searchpoint Optima section.

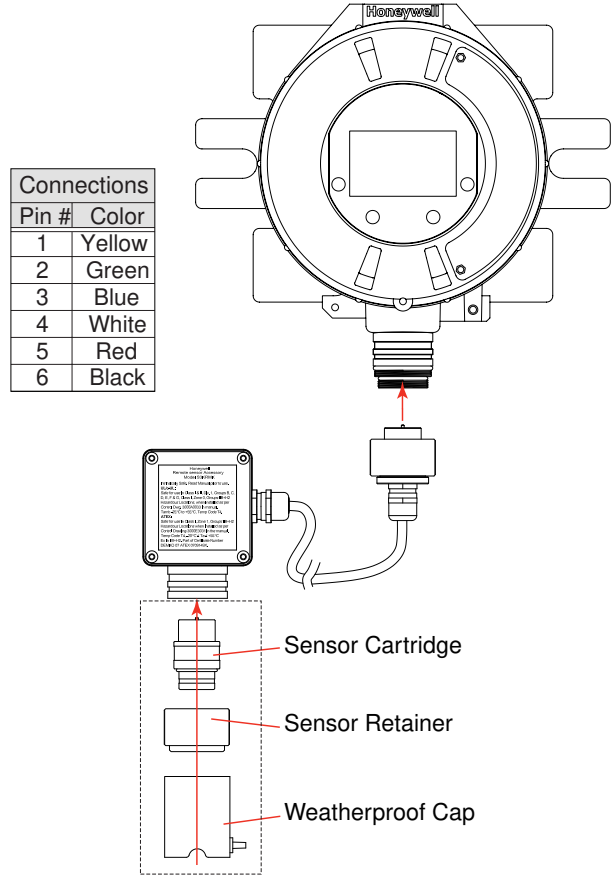

Connections	
Pin #	Color
1	Yellow
2	Green
3	Blue
4	White
5	Red
6	Black

Sensor Mounted to Remote Sensor Kit

Figure 42. Installing a remote sensor mounting kit

mV Personality Wiring

A transmitter with the mV personality board allows interface to the Multi Purpose Detector (MPD), 705, and Sensepoint devices.

CAUTION

Caution: See Specifications to ensure that the transmitter and the mV sensor have the appropriate approvals prior to commissioning.

Caution: Verify that the mV sensor being installed has compatible threads (3/4 NPT or M25).

Read the Wiring the Transmitter section which defines the power and 4-20mA output connections that are common to all personalities.

Connections from the mV sensor to the transmitter are made via a single pluggable terminal block. Honeywell Analytics recommends that an 8” (20 cm) service length for wiring be maintained. The wire colors for the connections for each sensor type are shown in the table on this page.

Verify that wires for 4-20mA outputs are routed away from sources of noise such as relay wires.

NOTE

Note: The black and red wires from the MPD are not used with the mV personality board. Ensure that they are properly isolated from live connections. Do not cut the wires.

CAUTION

Caution: Dress the wires properly so that cabling does not contact switches 1 or 2 on the back of the POD. Do not force the POD into the enclosure. Doing so may result in damage to the wiring or the POD. If resistance is felt, wires may be preventing the POD from being properly positioned.

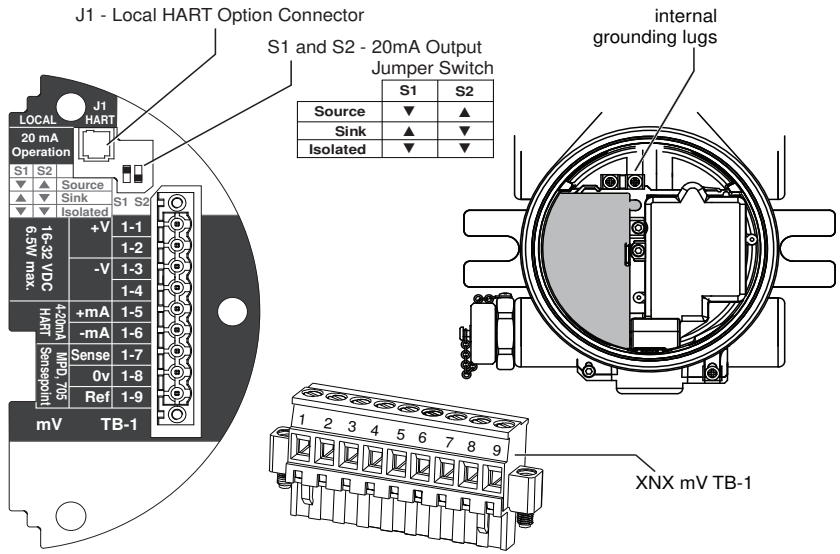

Figure 43. mV personality board terminal blocks and jumper switches

TB-1	Desc.	Wire Color from Sensor						
		mV Catalytic Bead Sensor			Sensept PPM*	mv MPD w/IR Sensor		
		MPD	705 705HT	Sensept Senspt HT		IR 5%		IR Flam
						CO_2	CH_4	
Pins 1-6		See subsections in the 4-20 mA Output, Common Connections, and Power Settings section for pin identification						
7	Sense	Brown			Red	Brown		
8	0v	White			Green	White		
9	Ref	Blue			Blue	Blue		

*Internal earth ground; approximately one inch of the black sheath that contains the Sensepoint PPM's four wires (red, blue, green, silver) must be split to allow the silver grounding wire to reach the internal grounding lugs.

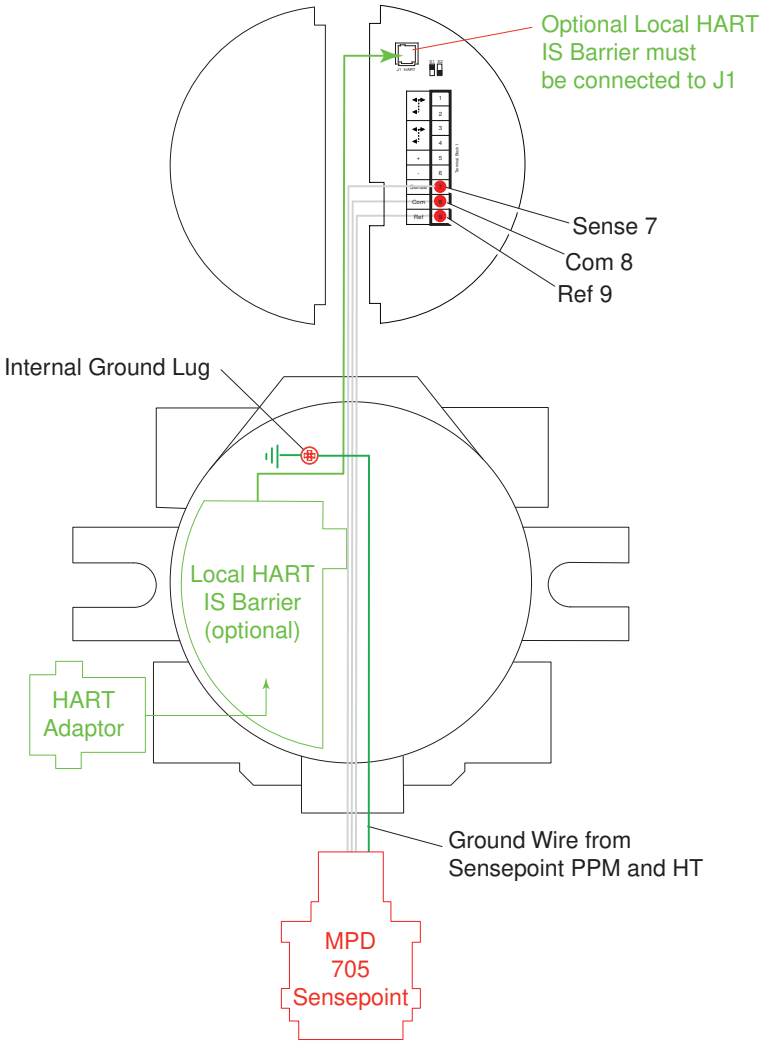

Figure 44. mV personality wiring

mV Remote Sensor Mounting

The sensor can be mounted remotely from the transmitter; the installation will vary by installed location, sensor and thread type used. To remotely mount the sensor, follow this procedure:

1. Install a junction box appropriately rated for the environment. Allow sufficient room for the installation and calibration of the sensor. (MPD sensors must be installed with the sinter pointing down.)
2. Loosen the retainer locking screw on the transmitter with the supplied hex key.
3. Unscrew the transmitter's Weatherproof Cap and loosen the retainer locking screw with the supplied hex key.
4. Run conduit or cable from one of the transmitter's available conduit ports to the location of the remote terminal housing in accordance with local requirements.

   A terminal housing provides a mounting base for the sensor. The installation wiring enters the terminal housing via conduit. UL and CSA require a conduit pour fitting within 18 in. (45 cm) of each enclosure.

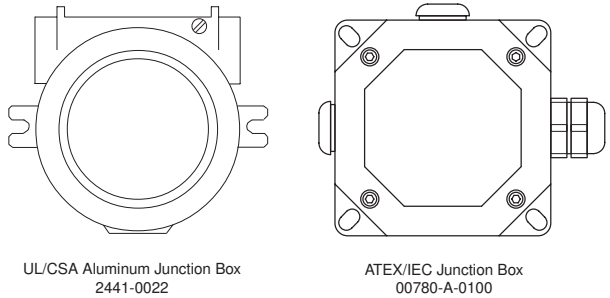

Figure 45. Remote terminal housings

The distance between transmitter and remote installation must comply with these parameters to ensure proper operation. Distances are dependent on sensor types and the wire gauge used.

AWG	Metric Wire Gauge	MPD CB1, 705 Series. Sensepoint Series Sensors	MPD IC1, IV1 & IF1 Sensors
24	0.25 mm^2	12m (47 ft.)	30m (97 ft.)
22		20m (65 ft.)	50m (162 ft.)
20	0.5 mm^2	30m (97 ft.)	80m (260 ft.)
18		50m (162 ft.)	120m (390 ft.)*
16	1.0 mm^2	80m (260 ft.)*	200m (650 ft.)*

* Fluctuations in temperature have a greater impact on smaller wire diameters and therefore may require more frequent zero calibrations.

5. Wire the pluggable terminal block as shown in the mV personality board illustration then plug the connector into the back of the mV personality board. In remote mount MPD configurations, the 3 wires connecting the pluggable terminal block and the remote MPD must be routed through the supplied ferrite bead (Honeywell Analytics part no. 0060-1051, supplied in the accessory kit) as shown in Figure 46.

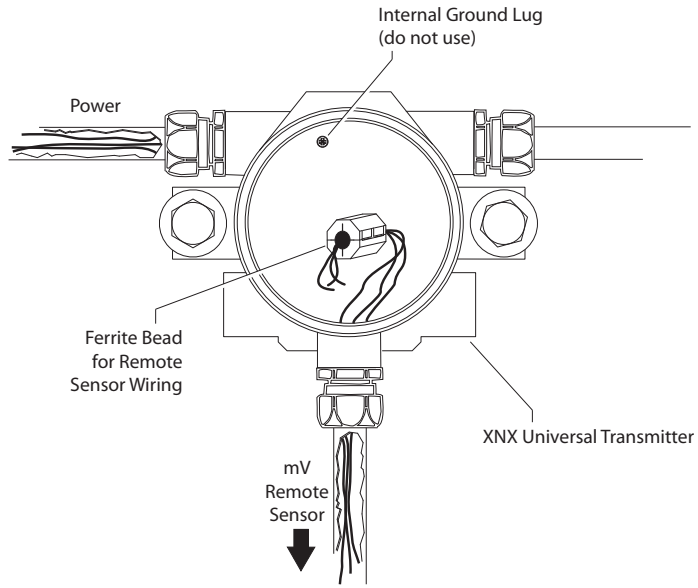

Figure 46. Ferrite bead wiring

6. Mount the remote sensor junction box with sufficient room below to fit the sensor and Weatherproof Cap.

WARNING

Warning: Install the junction box according to local codes and manufacturer's requirements.

7. Attach the conduit to the remote terminal box. The junction box provides a mounting base for the sensor and contains the associated electronic circuit.
8. In the remote junction box, connect the wires from the transmitter to the 3-way terminal block in the terminal box.

NOTE

Note: The black and red wires from the MPD are not used with the mV personality board. Ensure that they are properly isolated from live connections. Do NOT cut the wires.

WARNING

Warning: The enclosures of remotely mounted 705HT sensors contain aluminum. Be careful to avoid ignition hazards due to impact or friction when installed in Zone 1 locations.

All cable port devices and blanking elements must be certified in type of explosion protection flameproof enclosure “Ex d” or “Ex e”, suitable for the conditions of use and correctly installed.

9. Plug the connector into the back of the mV personality board.
10. Install the mV sensor.
11. Terminate wiring at the mV sensor.
12. At the transmitter, pass the wires through the ferrite bead as shown in Figure 46 and terminate the wiring at the pluggable terminal block as shown in Figure 44.
13. Fit the terminal box lid.
14. Fit the sensor retainer, tighten the locking screw and fit the Weatherproof Cap (if required).
15. Calibrate the sensor following the procedure in the Calibration section.

NOTE

Note: Environmental conditions that compromise the IP66 protection provided by the Weatherproof Cap will extend published response times. Safety protocols or maintenance procedures that consider these environmental conditions are recommended.

IR Personality Wiring

The RS-485 digital communication is the primary interface in which the transmitter reads gas concentration and sensor status from the Optima Plus/Searchline Excel. If RS-485 communication fails, the Optima Plus/Searchline Excel 4-20mA output becomes the primary source to read gas concentration.

The transmitter allows local programming and configuration through the local LCD display as well as through the HART protocol. Gas concentrations can be viewed at the transmitter from the Searchpoint Optima Plus or Searchline Excel via 4-20mA output as well as from the digital communication connection on TB2 that can provide additional diagnostic information. The gas concentration is taken from the digital communication line as long as it is in agreement with the 4-20 mA output, otherwise the 4-20mA output takes precedence.

CAUTION

Caution: Dress the wires properly so that cabling does not contact switches 1-4 on the back of the POD.

The transmitter provides a 4-20mA output reflecting the input received. It also offers diagnostic information or data via HART or any of the additional communication options offered.

Read the Wiring the Transmitter section which defines the transmitter power and 4-20mA output connections that are common to all personalities.

CAUTION

Caution: Do not force the POD into the enclosure. Doing so may result in damage to the wiring or the POD or may alter the switch settings. If resistance is felt, wires may be preventing the POD from being properly positioned.

Searchpoint Optima Plus/Searchline Excel Connections

Connections from the Searchpoint Optima Plus or Searchline Excel to the transmitter are made via two pluggable terminal blocks (see the IR personality board wiring guide). Maintain an 8-inch service length of wiring.

In remote mount configurations, the maximum distance between the transmitter and Optima Plus or Excel is 100 feet (33 meters) using 0.75 mm^2 (18 AWG) wire minimum.

NOTE

Note: A second, black-handled screwdriver is included for use on terminal blocks 2 and 4. This tool is smaller than the magnetic wand and is designed to fit into the terminal connections on TB2 and TB4.

The Searchpoint Optima Plus or Searchline Excel can be supplied in either Sink or Source mode operation and is typically labeled on the white wire exiting the Searchpoint Optima Plus or Searchline Excel. Use the table in the IR personality board wiring guide to set S3 and S4 to the same output type that appears on the wire tag of the IR device.

For more information see the Searchpoint Optima Plus Operating Instructions (2108M0905) or the Searchline Excel Technical Manual (2104M0506).

Connecting Generic mA Devices

Use the following schematics to set switches S3 and S4 They *must* be set to the same output type (which appears on the wire tag of the mA device).

The IR personality type provides for a generic mA input under sensor type configuration. The XNX® Universal Transmitter can be used to convert the mA input to be transmitted over HART® or optional Modbus® or FOUNDATION™ Fieldbus protocols and to set optional relays (if equipped). Additional configuration of gas type and unit ID for reporting is required (see the Gas Selection section). For Generic mA devices, input values below 3mA will generate Fault 155.

XNX S3 and S4 must be in the UP position
Set mA Device and XNX to the same output type.

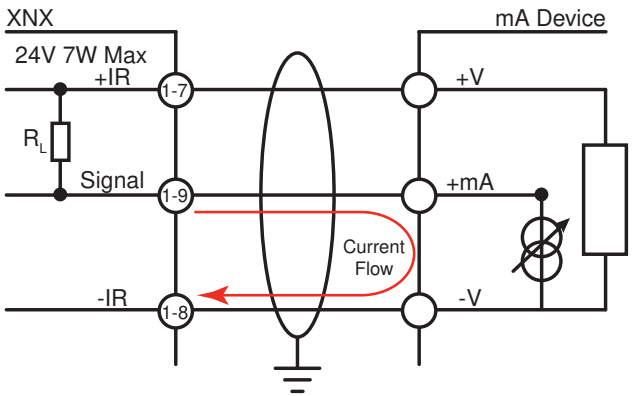

Figure 47. XNX mA input sink configuration

XNX S3 and S4 must be in the DOWN position
Set mA Device and XNX to the same output type.

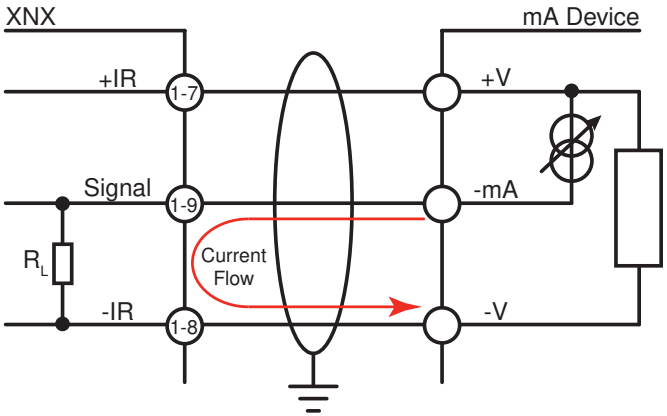

Figure 48. XNX mA input source configuration

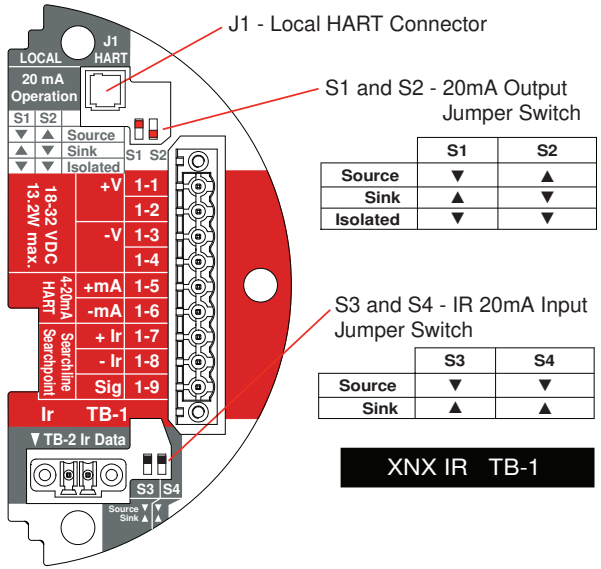

	S1	S2
Source	▼	▲
Sink	▲	▼
Isolated	▼	▼

	S3	S4
Source	▼	▼
Sink	▲	▲

Figure 49. IR personality board terminal blocks, jumper switches and wiring guide

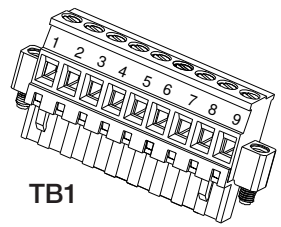

TB1

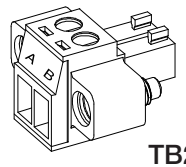

TB2

TB1		
Terminal No.	**Desc.**	**From Searchpoint Optima Plus Searchline Excel**
1	+24v	See the 4-20 mA Output, Common Connections, and Power Settings section .
2		
3	0 VDC	
4		
5	+20mA	
6	-20mA	
7	+24VDC	Red
8	0VDC	Black
9	Sig - 20mA	White

TB2	
Terminal No.	**From Searchpoint Optima Plus Searchline Excel**
A	Blue (RS485B)
B	Orange (RS485A)

XNX	
Desc.	**From Searchpoint Optima Plus Searchline Excel**
Earth	Green/Yellow

Note:
Honeywell Aanalytics recommends that Excel or Optima and the transmitter be wired to building ground. Ground the system at only one point.

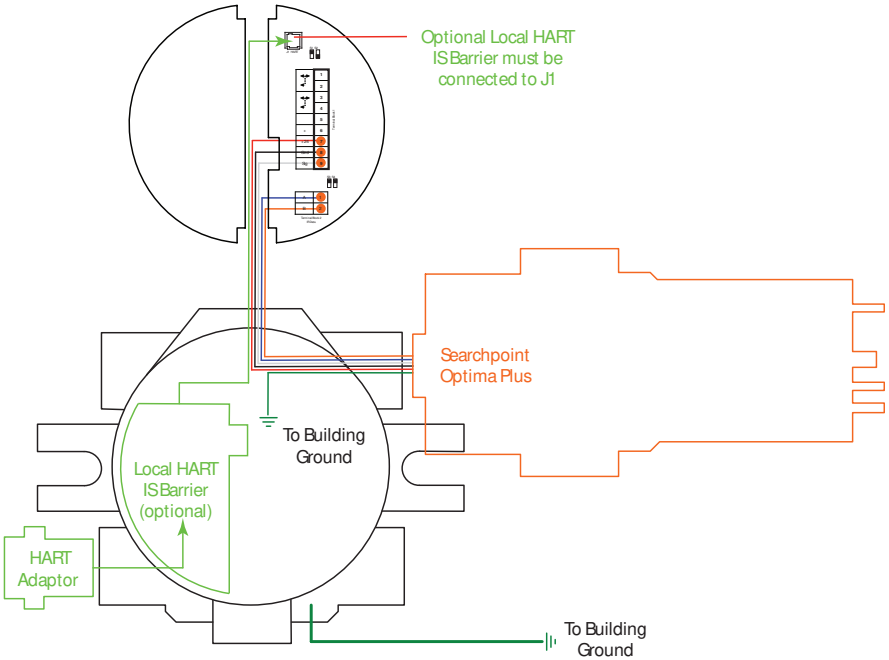

Figure 50. IR personality wiring - Searchpoint Optima Plus

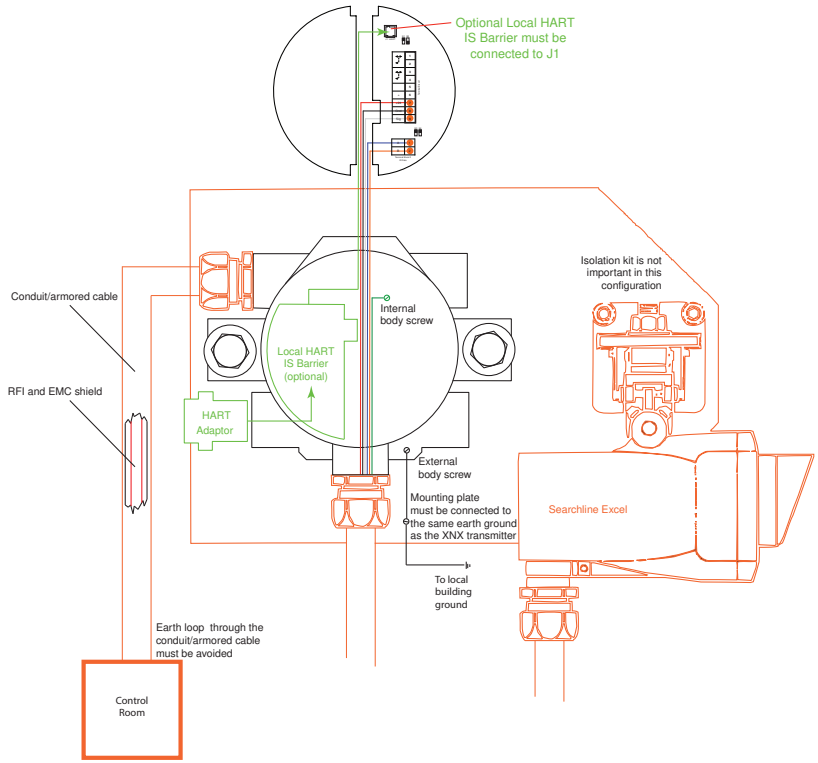

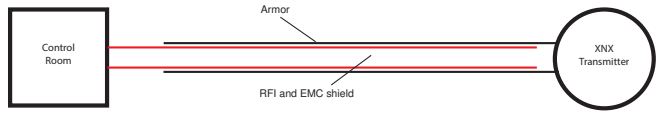

Notes:
Ground loops through the armor must be avoided. If armor is connected to the XNX transmitter via a conductive EXd cable gland, the armor must not be earthed at any other location (this will prevent ground loops). Since it is already earthed at the transmitter. Armor must be grounded only if an isolating gland is used to connect it to the transmitter.

Ground loops through the RFI and EMC shield must be avoided. RFI and EMC shield must be connected to a clean/instrumentation earth ground at the control room. To avoid an earth loop, connect it only at the control room (not at the transmitter).

Figure 51. IR personality wiring - Searchline Excel

Attaching the Searchpoint Optima Plus to the Transmitter

For M25 entries, insert the seal (Honeywell part number 1226-0410) into the proper cable/conduit opening then thread the locknut (Honeywell part number 1226-0409) onto the Optima to the end of the threads. Thread the Optima body into the transmitter until the seal compresses and/or the Optima bottoms out. Reverse until the semi-circular pattern of holes on the front of the weather protection are on the bottom (see below). Tighten the locknut to the transmitter body.

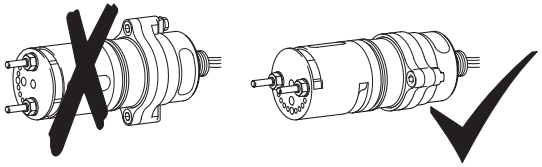

Figure 52. Searchpoint Optima Plus orientation

The 3/4” NPT ports do not require the seal and locknut. The form of the threads provide positive locking and sealing.

NOTE

Note: When attaching the Searchpoint Optima Plus, coat the threads with an anti-seize compound to prevent corrosion.

Searchline Excel/Searchpoint Optima Plus Remote Installation

Junction boxes are available for the Searchline Excel and Searchpoint Optima Plus to facilitate remote mounting from the transmitter. Junction boxes are available for installations requiring UL/CSA or ATEX/UKEX approvals. Consult the *Searchline Excel Technical Handbook* (Honeywell part number 2104M0506) or *Searchpoint Optima Plus Operating Instructions* (Honeywell part number 2108M0905) for specifics on remote installations or contact a Honeywell Analytics representative for more information.

Searchpoint Optima Plus/Searchline Excel Wiring

When wiring the transmitter and the Searchpoint Optima Plus or Searchline Excel for remote applications, the general recommendations of the ANSI/TIA/EIA-485-A standard must be adhered to with the following additions:

1. When mounting the Searchline Excel sensor or Searchpoint Optima Plus detector, run the wiring between each sensor or detector and the transmitter in separate, dedicated conduits.
2. Use 18 AWG twisted shielded cable for the RS485 connection between sensor or detector and the transmitter. Verify that the shield of the cable is grounded to earth and the XNX ground on one end ONLY.
3. Avoid running wiring near main cables or other high-voltage equipment.
4. Do *not* install 120 ohm terminating resistors. These resistors are not required due to low data rates.
5. Honeywell Analytics recommends that Searchline Excel sensors or Searchpoint Optima Plus detectors and the transmitter be wired to building ground. Ground the system at only one point.
6. Perform a soft reset after connecting the Searchpoint Optima Plus detector and the transmitter for the first time. The soft reset is performed by accessing the transmitter's Calibration Menu. When the soft reset is initiated for the Optima IR sensor, the RS-485 communication will be interrupted temporarily and faults F120 and/or F161 may be observed. RS-485 communication will be re-established in a few minutes and the faults will be reset automatically in non-latching mode. The faults must be reset manually in latching mode

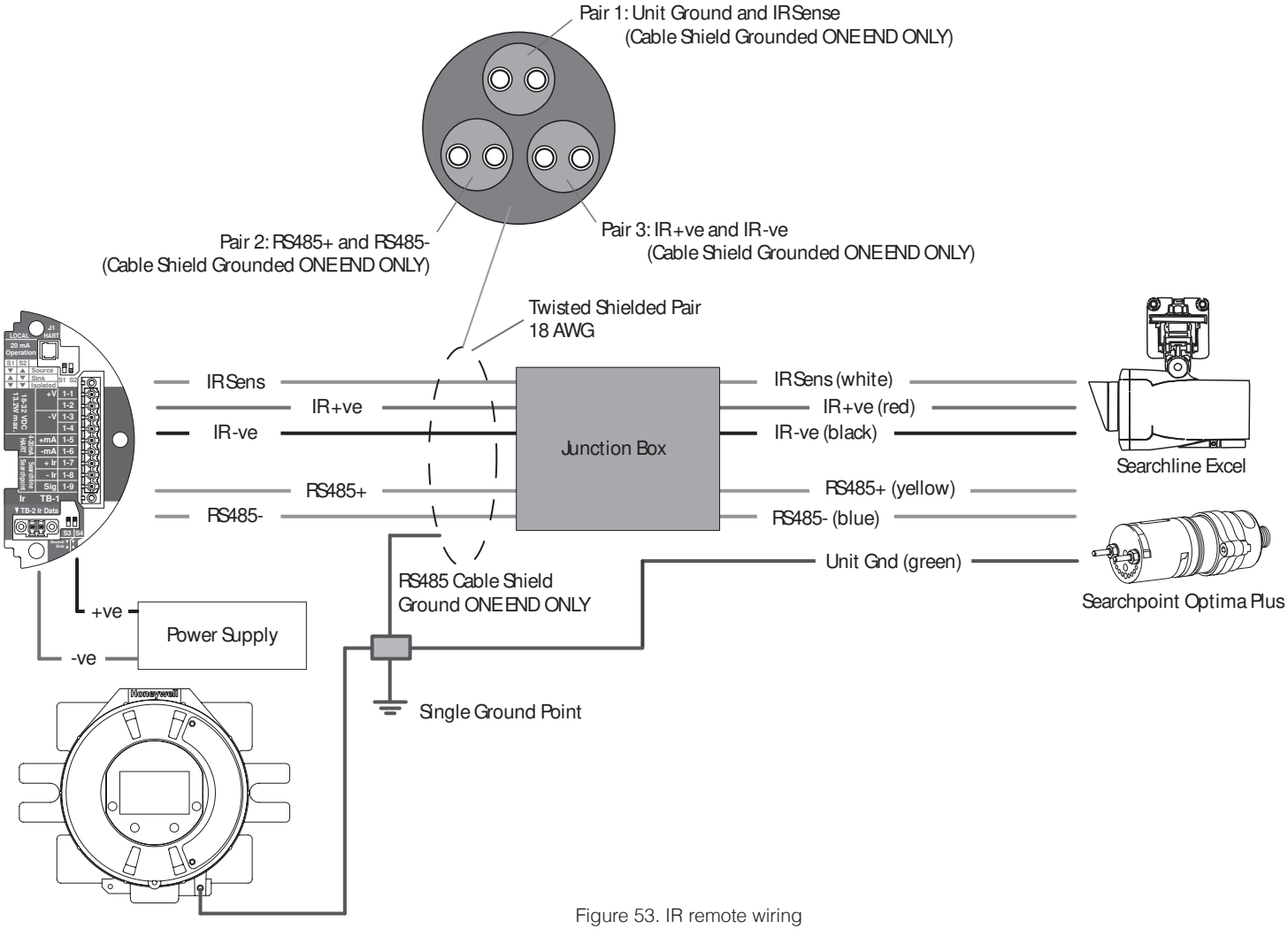

Figure 53. IR remote wiring

Options

Local HART Interface

Available with any sensor technology or option, this option provides an external access to the HART interface in the transmitter. An intrinsically safe (IS) barrier inside the transmitter allows the user to attach an external handheld field communicator for programming and configuration. The external interface is installed in the lower left cable/conduit port of the transmitter and is intrinsically safe.

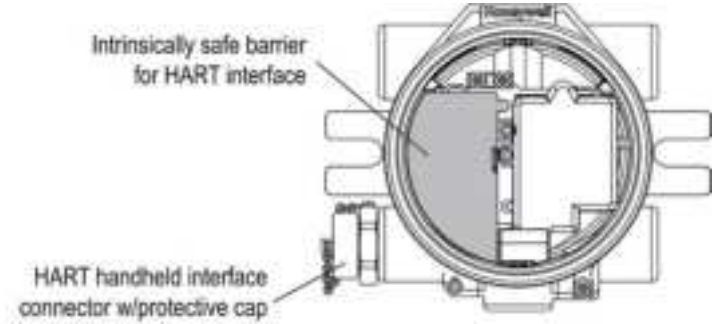

Figure 54. XNX Universal Transmitter with HART interface IS barrier installed

The HART protocol is a communication technology used with smart process instrumentation, providing two-way communication simultaneously with the 4-20mA analog signaling used by traditional instrumentation equipment. For more detailed information on HART, see the the HART Protocol section and www.fieldcommgroup.org.

Implementation of the HART protocol in the transmitter:

- Meets HART 6.0 physical layer specification
- The physical layer is tested according to HART Physical Layer Test Procedure, HCF_TEST-2.
- Data transfer rate: 1200 bps.

HART devices can operate in point-to-point or multidrop configurations.

CAUTION

Caution: Device address changes must be performed only by qualified service personnel

Point-to-Point Mode

In point-to-point mode, the 4–20 mA signal is used to communicate one process variable, while additional process variables, configuration parameters, and other device data are transferred via HART protocol, as shown in the illustration below. The 4–20 mA analog signal is not affected by the HART signal.

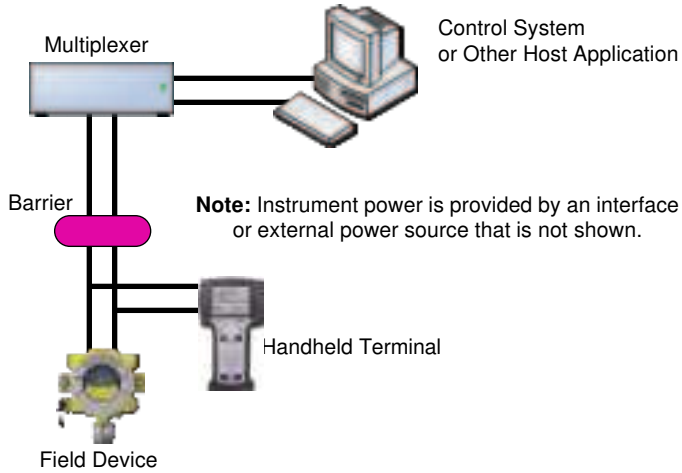

Figure 55. Point-to-point mode of operation

Multidrop Mode

The multidrop mode of operation requires only a single pair of wires and, if applicable, safety barriers and an auxiliary power supply for up to 8 field devices (see the illustration below). All process values are transmitted via HART protocol. In multidrop mode, all field device polling addresses are >0, and the current through each device is fixed at a minimum value (typically 4 mA).

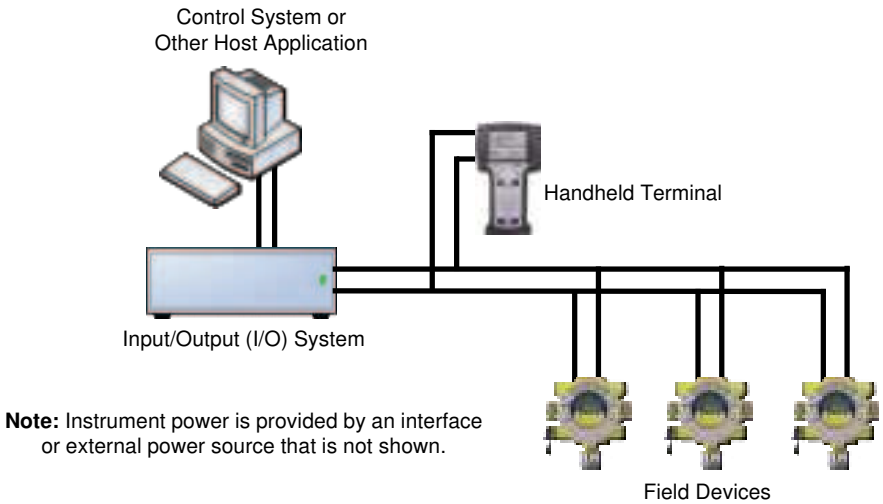

Note: Instrument power is provided by an interface or external power source that is not shown.

Figure 56. Multidrop mode of operation

NOTE

Note: Use multidrop connection for supervisory control installations that are widely spaced such as pipelines, custody transfer stations, and tank farms.

In general, the installation practice for HART devices is the same as conventional 4-20mA instrumentation. Individually shielded twisted pair cable, either in single-pair or multi-pair varieties, is the recommended wiring practice. Unshielded cables may be used for short distances if ambient noise and cross-talk will not affect communication.

The minimum conductor size is 0.51 mm diameter (#24 AWG) for cable runs of less than 5,000 ft. (1,524 m) and 0.81 mm diameter (#20 AWG) for longer distances.

Cable Length

Most installations are well within the 10,000 ft. (3,000 m) theoretical limit for HART communication. However, the electrical characteristics of the cable (mostly capacitance) and the combination of connected devices can affect the maximum allowable cable length of a HART network. The table below shows the effect of cable capacitance and the number of network devices on cable length. The table is based on typical installations of HART devices in non-IS environments, i.e., no miscellaneous series impedance.

More information for determining the maximum cable length for any HART network configuration can be found in the *HART Physical Layer Specifications*.

Cable Capacitance – pf/ft (pf/m) Allowable Cable Lengths for 18 AWG (1.0 mm²) Shielded Twisted Pair Cable				
Number of Network Devices	**20 pf/ft (65 pf/m)**	**30 pf/ft (95 pf/m)**	**50 pf/ft (160 pf/m)**	**70 pf/ft (225 pf/m)**
1	9,000 ft (2,743 m)	6,500 ft (1,981 m)	4,200 ft (1,280 m)	3,200 ft (975 m)
2	8,750 ft (2,667 m)	6,350 ft (1,935 m)	4,075 ft (1,242 m)	3,125 ft (953 m)
3	8,500 ft (2,590 m)	6,200 ft (1,890 m)	3,950 ft (1,205 m)	3,050 ft (930 m)
4	8,250 ft (2,515 m)	6,050 ft (1,845 m)	3,825 ft (1,165 m)	2,975 ft (905 m)
5	8,000 ft (2,440 m)	5,900 ft (1,800 m)	3,700 ft (1,130 m)	2,900 ft (884 m)
6	7,800 ft (2,380 m)	5,760 ft (1,755 m)	3,620 ft (1,105 m)	2,820 ft (860 m)
7	7,600 ft (2,317 m)	5,620 ft (1,713 m)	3,540 ft (1,080 m)	2,740 ft (835 m)
8	7,400 ft (2,255 m)	5,480 ft (1,670 m)	3,460 ft (1,055 m)	2,660 ft (810 m)

Relays

The relay option (XNX-Relay) provides 3 form “C” SPCO contacts for alarm and fault indication. A remote reset is provided to silence alarms.

The remote reset switch (designated TB-4 and labeled “Remote Reset SW”) is located on the relay option board. It provides a remote hardware-based reset of faults and alarms to the transmitter. In the event that direct access to the local user and HART interfaces is not possible, alarms and faults from an XNX transmitter can be reset remotely using a switch.

The transmitter can be reset by activating a momentary switch. This will momentarily close the circuit between the two pins of TB4, providing the same functionality as a Reset Alarms & Faults command performed from the main screen of the local user or the HART interfaces.

⚠ NOTE

Note: This option is not available when the Modbus or FOUNDATION Fieldbus options are installed.

Wiring for the relays is through an available cable/conduit port to a pluggable terminal block. See Figure 33 for the terminal block legend.

The transmitter has three relays: relay 1 is for alarm level 1, relay 2 is for alarm level 2, and relay 3 is for faults and special states. All special states are indicated by the fault relay.

Honeywell Analytics recommends that the fault relay be used in all installations to maintain safe operation. See Set Alarm Values for more information.

The relay state is refreshed every 2 seconds. The fault relay is

normally energized indicating proper operation. In the event of power failure or fault, the C-NO connection will open.

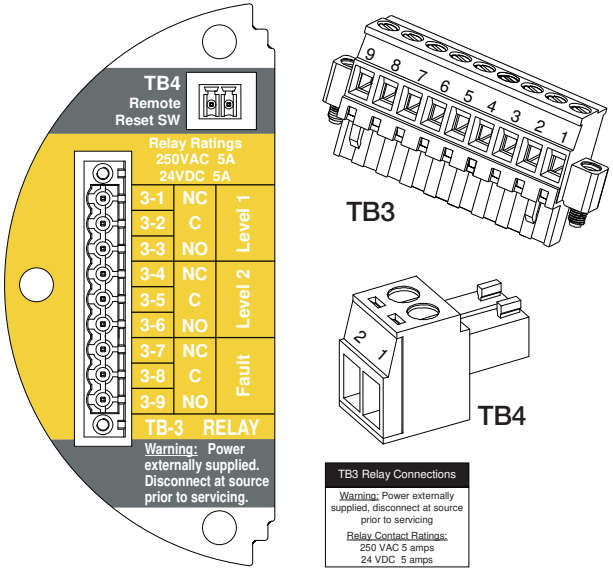

Relay	
TB3	
1	NC
2	C
3	NO
4	NC
5	C
6	NO
7	NC
8	C
9	NO
TB4	
1	1
2	2

Figure 57. XNX relay option board terminal blocks

Modbus

The optional Modbus interface allows all transmitter local user interface functions and parameter settings to be transmitted.

Modbus is a master-slave protocol. Only one master (at a time) is connected to the bus. Modbus communication is always initiated by the master. The slave nodes never transmit data without receiving a request from the master node. The slave nodes never communicate with each other. The master node initiates only one Modbus transaction at a time.

Terminals 3-1 through 3-4 are provided to facilitate bus wiring; there is no internal connection to other XNX circuitry. Terminal 3-1 is connected internally to 3-2. Similarly, terminal 3-3 is connected to 3-4

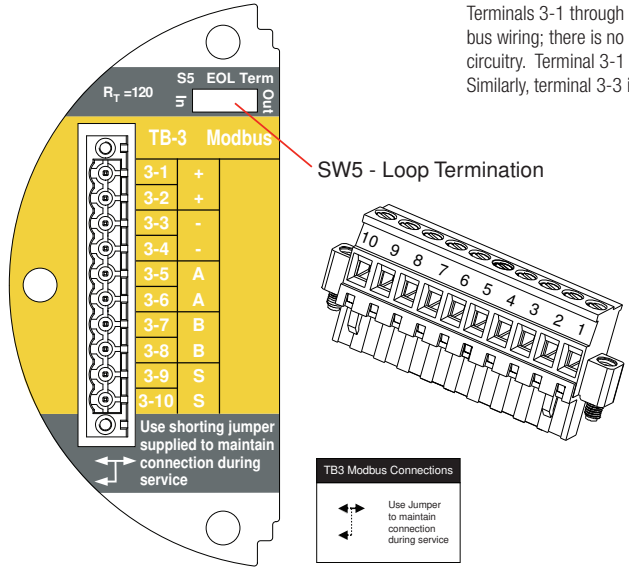

Modbus	
TB3	
1	+
2	+
3	-
4	-
5	A
6	A
7	B
8	B
9	S
10	S

Figure 58. Modbus option board terminal block/jumper switch

Modbus connections to the transmitter are made through a pluggable terminal block on the Modbus interface circuit board. Modbus RTU protocol uses ASCII/Hex protocols for communication. See the Terminal block legend for the terminal block legend. A loop termination point (SW5) is included on the Modbus interface board to provide termination of the Modbus loop.

FOUNDATION Fieldbus

FOUNDATION Fieldbus connections to the transmitter are made through a pluggable terminal block on the FOUNDATION Fieldbus option board, shown in the figure below. A simulation switch (SW5) is included on the board to enable/disable simulation mode. Terminals 3-1 through 3-4 are provided to facilitate bus wiring; there is no internal connection to other XNX circuitry. Terminal 3-1 is connected internally to 3-2. Similarly, terminal 3-3 is connected internally to 3-4.

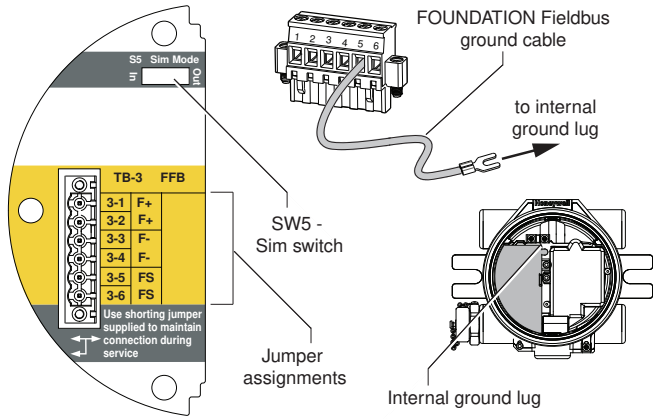

FOUNDATION Fieldbus	
TB3	
1	F+
2	F+
3	F-
4	F-
5	FS
6	FS

Figure 59. FOUNDATION Fieldbus option board, terminal block, jumper switch

NOTE

Note: FOUNDATION Fieldbus XNX transmitters require a separate power source and cannot be powered via the bus.

Powering the Transmitter the First Time

Detectors Configured for EC/mV/IR (except Searchline Excel)

After mounting, wiring the transmitter, wiring the specific mV or IR sensor, or installing the EC cartridge, the installation is visually and electrically tested as described below.

WARNING

Warning: This procedure must be performed only by suitably trained personnel following local and site procedures. Verify that the associated control panel is inhibited so as to prevent false alarms.

Warning: Do not set the minimum or maximum controller alarm levels at less than 10% or greater than 90% of the full scale range of the sensor. CSA and FM agency limits are 60% LEL or 0.6mg/m^3.

1. Verify that the transmitter is wired correctly according to this manual and the associated control equipment manual.
2. If equipped, unscrew the Weatherproof Cap, loosen the sensor retainer locking screw, and unscrew the retainer.
3. For EC sensors, plug in the sensor cartridge, taking care to align the sensor pins with the connector holes in the PCB.

CAUTION

Caution: For toxic sensors, remove the shorting clip from the bottom of the sensor prior to installation. No shorting clip is provided with O_2 sensors.

4. Refit the sensor retainer, tighten the locking screw and refit the Weatherproof Cap.

NOTE

Note: Before replacing the cover on the transmitter housing, coat the threads with anti-seize compound to prevent corrosion.

Note: Inspect the cover O-ring for cracking or any other defects that might compromise the integrity of the seal. If it is damaged, replace with the O-ring supplied in the official service kit.

5. Apply power to the transmitter. This will in turn provide power to the sensor.
6. During warmup, the transmitter will be forced to 3 mA (inhibit mode).
7. The display will enter a start up routine displaying the initialization screen, then the transmitter loads its operating system, data from the sensor and checks if it is the same type transmitter and sensor software version numbers, gas type, the detection range and span calibration gas level, estimated time to next calibration due, and self-test result. The boot-up procedure takes about 45 seconds. The LCD and LED test is performed in the initialization after powering on. All LCD pixels and LEDs (red, green, and yellow) are turned on for 1.5 seconds. The LCD then goes blank and the LEDs turn off.

Figure 60. XNX Initialization and General Status screens

In the final stages of boot-up, warnings and faults may be observed until the user performs the proper configuration, calibration, and reset activities described in the following sections. See Warnings and Faults for detailed descriptions.

Once the General Status screen appears, the transmitter and sensor are in normal monitoring mode.

NOTE

Note: Calibration of sensors attached to the transmitter is mandatory before the sensor can be used for gas monitoring. Refer to the Calibration section for the procedure. For EC and mV personalities, perform Accept New Sensor Type before calibrating the sensor.

Note: For initial commissioning, refer to EN 60079-29-2.

IR Units Configured for Searchline Excel

When powering the transmitter fitted with a Searchline Excel sensor, the following procedure must be performed by Honeywell-trained personnel to assure proper installation.

1. Verify that the transmitter is wired correctly according to this manual and the associated control equipment manual.
2. Apply power to the transmitter. This will in turn provide power to the sensor.
3. The sensor output will be forced to 3 mA (default warning).
4. The transmitter will enter a boot-up routine, displaying the initialization screen. The transmitter will load its operating system, data from the sensor, sensor software version numbers, gas type, the detection range and span calibration gas level, estimated time to next calibration due, and self-test result. This will take about 45 seconds.

Figure 61. XNX Initialization and General Status screens

In the final stages of boot-up, warnings and faults may be observed until the user performs the proper configuration, calibration, and reset activities described in the following sections. See Warnings and Faults.

5. When the transmitter completes boot-up, perform a soft reset (see the Soft Reset section) on the Searchline Excel detector from the Calibration Menu. When the soft reset is intitated, the RS-485 communication will be temporarily interrupted and faults F120 and/or F161 may be observed. The RS-485 communication will be re-established in a few minutes and the faults will automatically be reset in Non-Latching mode. F120 and/or F161 must be reset manually in Latching mode.
6. Set the Path Length section for the application, then align the transmitter and receiver (see the Align Excel section).
7. Once the alignment is complete, perform a zero calibration on the Searchline Excel detector to complete the commissioning process. See the *Searchline Excel Technical Manual* (Honeywell part number 2104M0506) for calibration information.
8. Reset any faults that appear in the transmitter's display. The transmitter and Searchline Excel sensor are now ready to monitor.

Remote Calibration of MPD Sensors (not part of the approval by DEKRA Testing and Certification GmbH)

In addition to functional gas testing to ensure the system is operating properly, remote calibration of the MPD CB1 catalytic combustible sensor and MPD IV1 and MPD IF1 infrared combustible sensors can be performed provided the following requirements are met:

- Remote sensor is installed in an indoor environment
- Internal air velocity does not exceed 0.5 m/s
- Weatherproof cap part number 0200-A-1640 is installed on the sensor housing
- A 1 LPM regulator is used for calibration gas delivery

Perform the remote calibration procedure in accordance with The Product Specifications section except using the Weatherproof Cap (Honeywell part number 0200-A-1640) instead of the regular flow housing (Honeywell part number 1226A0411).

Honeywell Analytics recommends MPD sensor calibration at a maximum interval of 180 days (the default value). This value can be reprogrammed in accordance with site procedures to assure the highest level of safety. Verify the correct operation of each sensor before each use by calibration with a certified test gas of known concentration.

The pellistors used in flammable gas sensors can suffer from a loss of sensitivity when in the presence of poisons or inhibitors, e.g., silicones, sulfides, chlorine, lead, or halogenated hydrocarbons.

Configuring the Transmitter

The transmitter can be configured via the local user interface by using the menus available in Configure Menu. For information on accessing and navigating the menus, see Controls and Navigation. The transmitter is shipped with these settings:

Display Language		English
Date Format		mm/dd/yy
Time Format		HH:MM
mV Sensor Type (w/mV personality)		MPD-IC1 (%Vol)
Alarm Levels		Sensor Cartridge Dependent
Latching/Non-Latching Alarms		Alarm: Latching Fault: Non-Latching
Display Units		PPM, %VOL or %LEL (dependent on personality and sensor choice)
4-20 mA Levels[1]		Inhibit: 2.0 mA Warning: 3.0 mA Overrange: 21.0 mA
Temperature Warning*		Enabled
Deadband		Enabled
Calibration Interval		180 Days (HA recommends 30 day interval)
Unit ID		XNX #nnnnnnnn
Relay Settings		Alarm Normally De-Energized
Fieldbus Settings	**HART®**	Address: 0 Mode: Point-To-Point
	Modbus® (if installed)	Address: 5 Baud Rate: 19200
Level 1 Password Access		0000
Level 2 Password Access		0000
Easy Reset Enabled		Yes

*Remark: Temperature warning is disabled as default for only XNX Russian version

Configure Menu

Functions in the Configure Menu and the security levels required to change them are explained in this table.

Symbol	Description	Security Level
	Select Language	1
	Set Date & Time	1
	Set mV Sensor Type	2
	Set mA Sensor Type	2
	Gas Selection	2
	Range & Alarms	2
	Latching/Non-latching	2
	Set Units	2
	mA Levels	2

Symbol	Description	Security Level
	Calibration Interval	2
	Accept New Sensor Type	2
	Beam Block Options	2
	Path Length	2
	Unit ID	2
	Relay Options	2
01101	Fieldbus Options	2
	Configure Security	2

WARNING

Warning: When configuring or communicating with the transmitter using the local user interface, resume monitoring by exiting all menus and returning to the General Status menu manually. No time outs are invoked.

NOTE

Note: With the exception of Inhbit Mode, gas measurement continues in the background allowing users to navigate screens without taking the transmitter offline.

Select Language

Available languages for the transmitter are English, Italian, French, German, Spanish, Russian, Mandarin, and Portuguese.

Figure 62. Select Language menu

Different screens are used to display each of the eight available languages, one language per screen. Each language screen will appear in three languages: the selected language, Russian, and Mandarin. To select a new display language, use the switches to navigate through the selections. Use to make the selection or to discard the selection and return to the previous menu.

Figure 63. Language Selection Screen

Figure 64. Accept Language Change screen

Set Date and Time

Figure 65. Set Date & Time menu

Select “Set Date and Time” to change the date format and set the transmitter’s current time/date.

Set Date Format

Figure 66. Set Date Format menu

Use the switches to highlight “MM/DD/YY.” Select to set the date format.

Set Date

Figure 67. Set Date Format screen / Set Date menu

Use the Set Date selection to set the current date. Use the switches to select the year, month, and day. Select to set the desired date.

Figure 68. Setting the Date screen

Use the switches to decrease or increase the values until the desired value appears. Select to set the value and move to the next character. Repeat for each character to be changed.

Set Time

Figure 69. Set Time menu

Use the switches to decrease or increase the values until the desired value appears. Use to select the value and move to the next character. Repeat for each character to be changed.

Figure 70. Set Time screen

Use the switches to navigate to the ✓. Select it to save the changes. If ✓ is not selected, no changes will be saved.

Figure 71. Accept Time-Date Changes screen

When the new settings have been saved, the “Settings Accepted” screen will be displayed.

Figure 72. Time-Date Settings Accepted screen

NOTE

Note: The remainder of this section requires Level 2 access.

Set mV Sensor Type

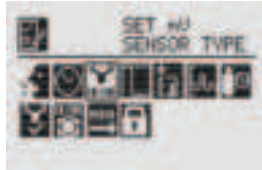

Figure 73. Set mV Sensor Type screen

Set mV Sensor Type sets the identity of the type of mV sensor attached to the transmitter. The available mV sensor type selections are:

Sensor	Description
MPD-IC1 (5%V)	MPD Carbon Dioxide 5%Vol
MPD-IV1 (5%V)	MPD Methane 5%Vol
MPD-IV1 (100%L)	MPD Methane 100%LEL
MPD-IF1 (100%L)	MPD Flammable 100%LEL
MPDAM-CB1 (100%L)	MPD Flammable 100%LEL
705-HT (20%L)	705 Flammable 20%LEL (High-Temp)
705-HT (100%L)	705 Flammable 100%LEL (High-Temp)
705-STD (100%L)	705 Flammable 100%LEL
SP-HT (20%L)	Sensepoint Flammable 20%LEL (High-Temp)
SP-HT (100%L)	Sensepoint Flammable 100%LEL (High-Temp)
SP-STD (100%L)	Sensepoint Flammable 100%LEL
SP-PPM (10%L)	Sensepoint Flammable PPM (10%LEL equiv)
SP-PPM	Sensepoint Flammable PPM
SP-HT-NH3	Sensepoint Ammonia 30,000 PPM

[1]In nonane detection applications, if an MPDAM-CB1 sensor is employed, use star rating 2; with SP-HT sensors, use star rating 4.

Figure 74. Current configured mV sensor and mV Available Sensor list

The first screen displays the currently configured sensor. Select ✓ to navigate to the Sensor Selection screen. To select a new mV sensor, use the switches to scroll through the list. Use ✓ to select a sensor or ✪ to discard the sensor selection, retaining the previously selected sensor, and return to the previous menu.

Set mA Sensor Type

Figure 75. Set mA Sensor Type screen

Set mA Sensor Type identifies the type of mA sensor attached to the transmitter. The available mA sensor choices are “Excel/ Optima” and “Other mA Sensor.”

Figure 76. mA Available Sensor list

To select a new mA sensor, use the switches to move through the list. Use ✓ to make the selection or ✪ to discard the selection, retain the previously selected sensor, and return to the previous menu.

NOTE

Note: This configuration option is not available for XNX transmitters with EC sensors.

Gas Selection

Gas Selection sets the target gas for sensors capable of detecting multiple gases. The available gases for each of the capable sensors is determined by the device connected to the transmitter.

Figure 77. Gas Selection menu

After selecting Gas Selection, the initial screen displays the current target gas. Select ✓ to display the list of available gases for the configured sensor. Use the switches to scroll through the list. A sample of the list is shown in Figures 80 and 81.

Figure 78. Available Target Gas list

Use ✓ to select the new gas or ✪ to discard the selection, retain the previously selected gas, and return to the previous menu. When a new gas is selected, these screens are displayed:

Figure 79. Select New Target Gas screens

NOTE

Note: The gas selections available will vary with different types of sensors. Gases listed with a "-2" suffix are compliant with 60079-20-1 LEL levels.

WARNING

Warning: When selecting a new target gas for units with a Searchpoint Optima Plus, the sensor must be recalibrated.

These are the transmitter's selectable gases:

- Butane (C_4H_{10})
- Carbon Dioxide (CO_2)
- Ethanol (C_2H_5OH)
- Ethylene (C_2H_4)
- Hexane (C_6H_{14})
- Hydrogen (H_2)
- Methane (CH_4)
- Methanol (CH_3OH)
- Propane (C_3H_8)
- Star 1 through Star 8[1]

WARNING

Warning: Do not use the transmitter in oxygen-enriched atmospheres. Concentrations displayed will be adversely affected by oxygen depletion.

Warning: High off-scale readings may indicate an explosive concentration of gas.

Changing the Gas or Units Name

If “Other mA Sensor” has been selected as the sensor type, the existing gas and units can be renamed. From the Gas Selection menu, select ✓ to open the Gas Name menu. Select ✓ again to open the Gas Name editing display. The first letter of the current selection will be highlighted (Figure 80).

Figure 80. Gas Name screen / Gas Name editing screen

Use the ◁ ▷ switches to cycle through the 76 options (26 capital letters, 26 lower case letters, 10 numbers, 13 typographic characters, and a space). When the first character of the new gas name has been reached, select ✓ to advance to the second character. Repeat this procedure with each character until the new gas name is displayed. In this example, “mA Sensor” has been changed to “Flow Sensor” (Figure 83). The name can be up to 15 characters long. Select ✓ to return to the Gas Name screen. The new name will be displayed in reverse (light characters on a dark background). Select the ▷ switch twice to display the Accept Settings screen. Select ✓ to accept the new gas name. A “Settings Accepted” screen will be displayed briefly, followed by the Gas Selection menu.

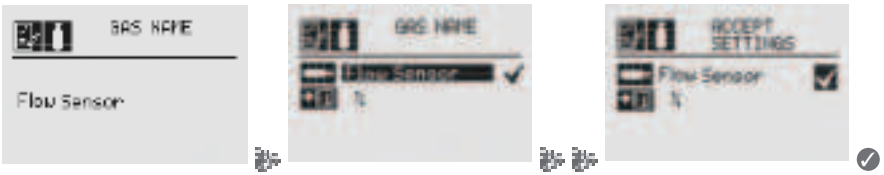

Figure 81. Accepting the New Gas Name screens

Follow the same procedure to rename the units (“%” in the illustrations). The units name can be up to 5 characters long.

Gas Selections and Alarm Limits Based on mV Sensor Type

These tables show the transmitter's programmable alarm limits.

Note: -2 Gas Selection %LEL values are per IEC 60079-20-1:2010

Alarm Limits (% Vol)	MPD-IC1 (5%V)
	Carbon Dioxide
Lower	0.5
Upper	5.0

	MPD-IV1 (5%V/V, 100%LEL)		
	Methane	Methane-1	Methane-2
Lower Alarm Limit	0.5% Vol	10% LEL	10% LEL
Upper Alarm Limit	5.0% Vol	60% LEL	60% LEL
% Volume Reference	n/a	5.0	4.4

	MPD-IF1 (100%LEL)	
	Propane-1	Propane-2
Lower Alarm Limit (% LEL)	10	10
Upper Alarm Limit (% LEL)	60	60
% Volume Reference	2.0	1.7

	MPDAM-CB1 (100% LEL)																				
	Hydrogen	Methane-1	Methane-2	Methanol	Ethelyne-1	Ethelyne-2	Ethanol-1	Ethanol-2	Propane-1	Propane-2	Butane-1	Butane-2	Hexane-1	Hexane-2	Star 1	Star 2	Star 3	Star 4	Star 5	Star 6	Star 7	Star 8
Lower Alarm Limit (% LEL)	10	10	10	10	10	10	10	10	10	10	10	10	10	10	20	20	20	10	10	10	10	10
Upper Alarm Limit (% LEL)	60	60	60	60	60	60	60	60	60	60	60	60	60	60	60	60	60	60	60	60	60	60
% Volume Reference	4.0	5.0	4.4	5.5	2.7	2.3	3.3	3.1	2.0	1.7	1.5	1.4	1.2	1.0	n/a	n/a	n/a	n/a	n/a	n/a	n/a	n/a

	705-STD (100% LEL)																				
	Hydrogen	Methane-1	Methane-2	Methanol	Ethelyne-1	Ethelyne-2	Ethanol-1	Ethanol-2	Propane-1	Propane-2	Butane-1	Butane-2	Hexane-1	Hexane-2	Star 1	Star 2	Star 3	Star 4	Star 5	Star 6	Star 7	Star 8
Lower Alarm Limit (% LEL)	20	20	20	25	25	30	30	30	25	30	30	30	50	50	50	30	25	20	20	20	15	15
Upper Alarm Limit (% LEL)	60	60	60	60	60	60	60	60	60	60	60	60	60	60	60	60	60	60	60	60	60	60
% Volume Reference	4.0	5.0	4.4	5.5	2.7	2.3	3.3	3.1	2.0	1.7	1.5	1.4	1.2	1.0	n/a	n/a	n/a	n/a	n/a	n/a	n/a	n/a

	705-HT (100% LEL)																					
	Hydrogen	Methane-1	Methane-2	Methanol	Ethelyne-1	Ethelyne-2	Ethanol-1	Ethanol-2	Propane-1	Propane-2	Butane-1	Butane-2	Hexane-1	Hexane-2	Star 1	Star 2	Star 3	Star 4	Star 5	Star 6	Star 7	Star 8
Lower Alarm Limit (% LEL)	20	15	20	20	20	20	20	20	20	20	20	20	20	20	50	30	25	20	20	20	15	15
Upper Alarm Limit (% LEL)	60	60	60	60	60	60	60	60	60	60	60	60	60	60	60	60	60	60	60	60	60	60
% Volume Reference	4.0	5.0	4.4	5.5	2.7	2.3	3.3	3.1	2.0	1.7	1.5	1.4	1.2	1.0	n/a	n/a	n/a	n/a	n/a	n/a	n/a	n/a

	705-HT (20% LEL), SP-HT (20% LEL)		
	Hydrogen	Methane-1	Methane-2
Lower Alarm Limit (% LEL)	5.0	5.0	5.0
Upper Alarm Limit (% LEL)	20	20	20
% Volume Reference	4.0	5.0	4.4

	SP-STD (100% LEL)																				
	Hydrogen	Methane-1	Methane-2	Methanol	Ethelyne-1	Ethelyne-2	Ethanol-1	Ethanol-2	Propane-1	Propane-2	Butane-1	Butane-2	Hexane-1	Hexane-2	Star 1	Star 2	Star 3	Star 4	Star 5	Star 6	Star 7	Star 8
Lower Alarm Limit (% LEL)	20	15	20	20	20	20	20	20	20	20	20	20	20	20	50	30	25	20	20	20	15	15
Upper Alarm Limit (% LEL)	60	60	60	60	60	60	60	60	60	60	60	60	60	60	60	60	60	60	60	60	60	60
% Volume Reference	4.0	5.0	4.4	5.5	2.7	2.3	3.3	3.1	2.0	1.7	1.5	1.4	1.2	1.0	n/a	n/a	n/a	n/a	n/a	n/a	n/a	n/a

	SP-HT (100% LEL)																				
	Hydrogen	Methane-1	Methane-2	Methanol	Ethelyne-1	Ethelyne-2	Ethanol-1	Ethanol-2	Propane-1	Propane-2	Butane-1	Butane-2	Hexane-1	Hexane-2	Star 1	Star 2	Star 3	Star 4	Star 5	Star 6	Star 7	Star 8
Lower Alarm Limit (% LEL)	10	10	10	10	10	10	10	10	10	10	10	10	10	10	20	20	20	10	10	10	10	10
Upper Alarm Limit (% LEL)	60	60	60	60	60	60	60	60	60	60	60	60	60	60	60	60	60	60	60	60	60	60
% Volume Reference	4.0	5.0	4.4	5.5	2.7	2.3	3.3	3.1	2.0	1.7	1.5	1.4	1.2	1.0	n/a	n/a	n/a	n/a	n/a	n/a	n/a	n/a

	SP-PPM (10% LEL)			
	Hydrogen	Methane-1	Methane-2	FLM
Lower Alarm Limit (% LEL)	2.0	2.0	2.0	2.0
Upper Alarm Limit (% LEL)	10	10	10	10
% Volume Reference	4.0	5.0	4.4	N/A

	SP-PPM	
	Hydrogen	Methane
Lower Alarm Limit (% LEL)	1000 ppm	1000 ppm
Upper Alarm Limit (% LEL)	5000 ppm	5000 ppm
% Volume Reference	n/a	n/a

	SP-HT-NH3
	Ammonia
Lower Alarm Limit (% LEL)	3000 ppm
Upper Alarm Limit (% LEL)	30000 ppm
% Volume Reference	n/a

Default Alarm Level for MPD and Sensepoint

	MPD-IC1 (5%V)	MPD-IV1 (5%V)	MPD-IV1 (100%L)	MPD-IF1 (100%L)	MPD-IC2 (5%V)	MPDAM-CB1 (100%L)	705-HT (20%L)	705-HT (100%L)	705-STD (100%L)	SP-HT (20%L)	SP-HT (100%L)	SP-STD (100%L)	SP-PPM (10%L)	SP-PPM	SP-HT-NH3
Default Alarm Level 1	1	1	20	20	1	20	5	20	20	5	20	20	2	1000	10000
Default Alarm Level 2	2	2	50	50	2	50	10	50	50	10	50	50	5	2000	20000

Default Alarm Level for Searchpoint Optima

Default Alarm Level 1	20
Default Alarm Level 2	40

Range and Alarms

WARNING

Warning: XNX Universal Transmitters carrying UL/CSA approvals that are configured for devices measuring %LEL will not allow adjustments to the full scale value. The range is fixed at 100%.

The Range & Alarms option applies only to units with certifications other than UL/CSA.

Figure 82. Range & Alarms menu

Set Range (full-scale)

Range is sensor dependent. The Set Range option allows the full-scale range to be set for the sensor which is attached to the transmitter. The full-scale range is based on the capability of the sensor. The selectable range for EC sensors is defined in the Selectable Range column of the table in EC Replacement Sensors. The selectable range for catalytic bead sensors is defined in the Selectable Range column of the table in Catalytic Bead and IR Replacement Sensor Cartridges.

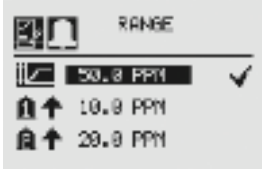

Figure 83. Range Option screen

When the Range option is highlighted, use the switches to decrease or increase the value. Use ✓ to accept the displayed value and move to the next field. When all fields have been updated, use the switch to highlight ✓ on the right side of the display. Use ✓ to accept the changes.

Figure 84. Setting the range value

When complete, the display will return to the Range Option screen.

Set Alarm Values

Set Alarm Values allows the values for Alarm Direction and Alarm Limits for both Alarm 1 and Alarm 2 to be set.

CAUTION

Caution: Alarm 1 and Alarm 2 values must be less than the upper limit value.

Use Alarm Direction to establish whether the alarm is to be triggered by rising or falling gas concentrations. Alarms for most target gases are triggered by rising concentration levels but certain gases; e.g., oxygen, can be measured for depletion levels. When the transmitter is configured with mV or OPTIMA sensors and the meaurement units are LEL, the alarm level setting is limited to 60%LEL.

If the concentration of the target gas remains above the alarm values for 3 seconds or more, an alarm will be triggered.

Figure 85. Alarm Direction screen

The icons next to the bell images indicate whether the alarm has been triggered by rising (↑) or falling (↓) gas concentrations. Use the switches to highlight the appropriate trigger. Use ✓ to make the selection or ✗ to discard it.

Figure 86. Setting alarm rising/falling

The Alarm Limits selection sets the alarm trigger level for both alarms.

Figure 87. Alarm Limits screen

Use to set the desired alarm limit and ✓ select it. Repeat for each alarm.

Figure 88. Setting an alarm setpoint

When complete, the display will return to the main Range & Alarm screen. When all settings have been made, use to move to the ✓ on the display to Accept Settings.

Figure 89. Accept Settings screen

When the settings have been saved, the following screen will appear on the display.

Figure 90. Settings Accepted screen

See Specifications for detailed EC cell information.

Set Temperature Warning

WARNING

Warning: There is a potential loss of sensitivity when the sensor is exposed to the extreme low and/or high temperature. Please check each sensor's recommended operating temperature and sensitivity loss before disabling temperature warning.

The Set Temperature Warning option allows the temperature warning to be enabled or disabled. By default, this option is enabled.

In the Range & Alarms menu, use the controls to select Temperature Warning menu. Select to enter the menu.

When entering Set Temperature Warning menu, a message will be displayed either "DISABLE WARNING?" or "ENABLE WARNING?" per the current setting. User will select disable or enable temperature warning.

Question message when current setting is "ENABLE"

Question message when current setting is "DISABLE"

Set Deadband

The Set Deadband menu allows enabling and disabling of the reading deadband. The deadband is a range of value where the gas reading is displayed as zero.

In the Range & Alarms menu, use the controls to select Set Deadband menu. Select to enter the menu.

When entering Set Deadband menu, a message will be displayed either "DEADBAND OFF" or "DEADBAND ON" per the current setting. User will select deadband off or on.

Question message when current setting is "DEADBAND ON"

Question message when current setting is "DEADBAND OFF"

Note: When deadband is off and the gas reading is between 0 and negative fault, XNX mA output will be ranged between 4 mA and 2.4 mA.

Selecting the Numeric Format

If “Other mA Sensor” has been selected as the sensor type, the transmitter’s output can be displayed in one of three numeric formats. From the Ranges & Alarms menu, select the ✓ switch to open the Range menu (Figure 91). Select the ✓ switch again to display the Range Lower Limit menu. Select the switch twice to open the first Numeric Format menu.

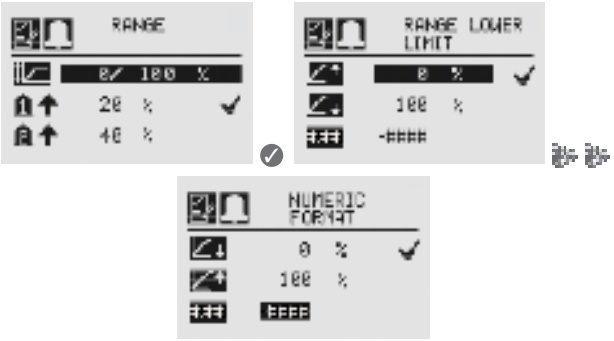

Figure 91. Navigating to the first Numeric Format menu

Select the ✓ switch to open the second Numeric Format menu, which displays the formats available for numerical display (see Figure 92).

Figure 92. Navigating to the second Numeric Format menu

Select or to cycle through the three options. When the desired format is highlighted, select the ✓ switch to make the selection the default display format. Select ✕ twice to return to the Ranges & Alarms menu.

Latching/Non-Latching Alarms

WARNING

Warning: There is a potential loss of sensitivity during exposure to high concentrations of H_2S. Under these conditions, set the control unit to latch at overrange. In standalone configuration, set alarms to latching. When resetting the overrange or alarm, verify correct operation of the transmitter.

Latching / Non-Latching is used to control whether Alarms 1 and 2 and faults will latch alarms.

Figure 93. Alarm Latching/Non-Latching screen

Figure 94. Alarm Latching screen

Select the or icon beside the alarm limit to display the Alarm Latching/Unlatching screen. Alarm latching determines whether alarms that are triggered are automatically reset when the condition dissipates (latching off) or remain active until an operator resets them manually (latching on). Highlight the desired latching option with the switches. Use ✓ to accept it.

Figure 95. Setting Alarm Latching/Unlatching screen

Use the same procedure to set the desired values for Alarm 2 and Faults. When all settings have been made, use to navigate to the on the display. Use to accept settings.

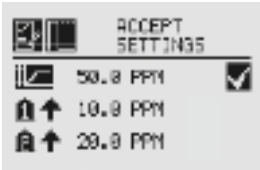

Figure 96. Accept Settings screen

When the settings have been saved, the following screen is displayed.

Figure 97. Settings Accepted screen

NOTE

Note: When non-latching is selected, external alarm latching is recommended.

Set Units

The Set Units menu allows the units of measurement displayed on the transmitter main menu to be set. This option also sets the units transmitted via HART, Modbus, or FOUNDATION Fieldbus sensors attached to the transmitter, reporting concentrations in PPM or %VOL (except oxygen).

Figure 98. Set Units menu

To change the units, use the switches to highlight the units icon. Use to select it. The transmitter's display will change to the Display Unit Selection screen which shows the available choices for the sensor type installed. Use the switches to highlight the desired unit of measurement. Use to select it or to discard the selection.

Figure 99. Display Unit Selection screen

CAUTION

Caution: When changing units of measure, check alarm level settings for the proper units and change as necessary.

Once the units of measurement have been set, use the switches to navigate to the '✓' to accept the values.

mA Levels

This option allows the user to select mA output levels for inhibit, fault, and overrange. Beam block and low signal apply to Searchline (see the table in the next column).

Figure 100. mA Levels menu

Using the switches, move to the mA output to be changed and use to select it.

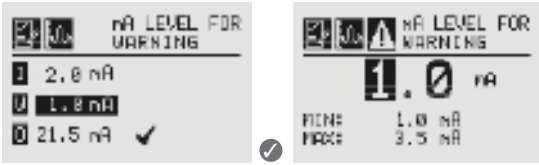

Figure 101. Set mA Levels for Warning screens

Use the switches to decrease or increase the value until the desired value appears. Use to select the value and move to the next setting. Repeat for each setting to be changed.

The default values and available output ranges for Inhibit, Warning, Overrange, Beam Blocked, and Low Signal are shown in the following table. See Warnings and Faults for more information.

Signal		Output (mA)		
		Default	Min	Max
I	Inhibit	2.0	1.0	3.5
W	Warning	3.0	1.0	3.5
O	Overrange	21.0	20	22
B	Beam Blocked	1.0	1.0	4.0
L	Low Signal	1.0	1.0	4.0

Figure 102. Set mA Levels for Inhibit screen

After all changes have been made, use the switches to move to the '✓' and use on the front panel to accept and save the settings. If '✓' is not selected, none of the changes will be saved.

Figure 103. mA Settings Saved screen

Calibration Interval

Calibration Interval allows a desired interval for sensor calibration to be set for sensors attached to the transmitter. The transmitter will generate a warning when the interval is reached.

Figure 104. Calibration Interval menu

Calibration Interval will not appear when an IR personality board is attached and the mA sensor type is set as 'Other mA Sensor'.

The default calibration values for the “Calibration Required” diagnostic vary based on sensor type. This value can be reprogrammed in accordance with site requirements to ensure the highest level of safety. Before commissioning, verify the correct operation of each sensor using calibration with a certified gas of known concentration.

Although the calibration interval can be set to any value between 0 and 360 days, Honeywell Analytics recommends that the interval for electrochemical and catalytic sensors be set to 180 days (or fewer, in accordance with customer site procedures) to assure the highest level of safety. Refer to EN 60079-29-2 for information on defining an appropriate calibration interval.

Use the switches to highlight the current interval and use to select it.

Figure 105. Edit Interval and Setting Interval Value screens

Use the switches to move to the desired position. Use to select it. Use the switches to decrease or increase the value until the desired value is reached. (The minimum number of days is 0; the maximum number is defined by the sensor type.) Use to select the value and move to the next field. Repeat for each field. When all of the fields have been updated, use the switches to highlight the ‘✓’ on the right side of the display. Use on the front panel to save the settings.

CAUTION

Caution: Setting the calibration interval to zero turns off the calibration notification. This can seriously affect sensor performance.

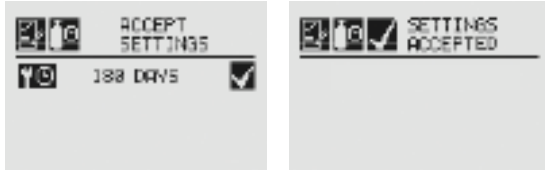

Figure 106. Saving New Interval and New Interval Accepted screens

Accept New Sensor Type

When replacing EC cells or mV sensors, use Accept New Sensor Type to load default parameters into the transmitter for calibration and sensor life. Accept New Sensor Type is also used when replacing an EC cell with another EC cell for a different target gas. (See Replacing with a Different Cartridge Type).

Figure 107. Accept New Sensor Type menu

When changing the target gas by inserting a new sensor, the transmitter will prompt the user for a confirmation of the change before adjusting to the properties of the new sensor.

Figure 108. Select New Sensor screen

In the display of the transmitter, the old sensor type and the new sensor type will be displayed. Use to accept the new sensor or to reject it.

Beam Block Options

The Beam Block Options menu is available only if the transmitter is connected to a Searchline Excel receiver.

Figure 109. Beam Block menu

If the infrared beam from the Searchline Excel transmitter is blocked or inhibited in such a way that the intensity of the beam drops to a level below the readable threshold set by the receiver, a warning will be generated by the transmitter. The Beam Block Options menu allows the user to define the maximum period of time the infrared beam can be blocked and the percentage of signal loss before generating a warning through the transmitter.

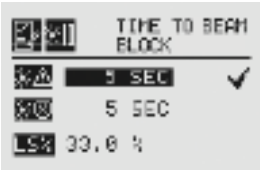

Figure 110. Beam Block Warning Time screen

Use the switches to move to the desired beam block time option and use to select it. Use the switches to decrease or increase the value until the desired value appears. Use to select the value and move to the next setting.

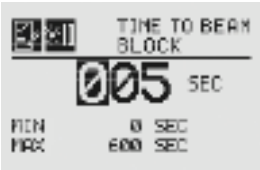

Figure 111. Setting Beam Block Warning Time screen

When the beam is blocked longer than the value set in Time to Beam Block, a fault is generated by the transmitter.

Set Time to Fault sets the minimum time the beam is blocked before generating a fault.

Figure 112. Beam Block Fault Time screen

Use the switches to move to the desired beam block time option and use to select it. Use the switches to decrease or increase the value until the desired value appears. Use to select the value and move to the next setting.

Figure 113. Setting Beam Block Fault Time screen

When the beam is blocked longer than the value set in Time to Fault, a fault is generated by the transmitter.

Low Signal Percentage sets the minimum percentage value of a beam that is not blocked. When the percentage decreases below the defined percentage, a fault is generated.

Figure 114. Low Signal Percentage screen

Use the switches to move to the desired Low Signal Percentage and use to select it. Use the switches to decrease or increase the value until the desired value appears. Use to select the value and move to the next setting.

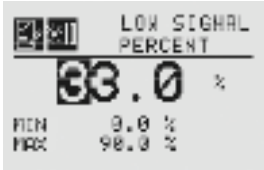

Figure 115. Setting the Low Signal Percentage

Once the values for Beam Block Warning, Beam Block Fault and Low Signal Percentage have been set, use the switch to highlight the '✓' on the right side of the display. Then use to accept the changes to the transmitter. If '✓' is not highlighted, none of the changes will be saved.

Figure 116. Accept Beam Block Changes screen

Figure 117. Beam Block Changes Accepted screen

Path Length

The distance (in meters) between the transmitter and the receiver is set through the Path Length menu. This menu is available only if the transmitter is connected to a Searchline Excel sensor.

Figure 118. Path Length menu

Setting the Path Length or distance between the transmitter and receiver of the Searchline Excel lets the devices determine the optimum settings for the beam strength for the application.

Figure 119. Current Path Length Setting screen

Use the switches to move to the desired Path Length setting and use to select it. Use the switches to decrease or increase the value until the desired value appears. Use to select the value and move to the next setting.

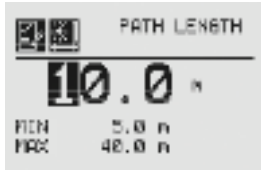

Figure 120. Setting Path Length screen

Once the values for Path Length have been set, use the switch to highlight the '✓' on the right side of the display. Use the to accept the changes.

Figure 121. Accepting Path Length Changes

Figure 122. Path Length Changes Accepted screen

Unit ID

The Unit ID option allows a unique unit ID of up to 18 characters to be set for each transmitter. This character string can be broadcast over any of the supported communication options, providing a means to create a unique identification for each transmitter for accurate reporting. Available characters are A-Z, a-z, 0-9 and special characters ? ! * % ( ) : & / , # + -

Figure 123. Unit ID menu

NOTE

Note: The XNX Unit ID is not the same as the HART tag in XNX applications using HART protocol.

Edit ID

Each transmitter is assigned a default Unit ID at the factory. The Edit ID menu allows the assigned ID to be modified.

Figure 124. Edit Unit ID screen

From the Edit ID Screen, use the switches and to select Edit ID. The current Unit ID is displayed. When editing an existing ID, the list of available characters begins at the value displayed.

Figure 125. Editing the Unit ID

Use the switch to highlight the first character to be changed. Use the switches to decrease or increase the value until the desired value appears. Use to accept the new value and move to the next character. Repeat for each character to be changed. The Unit ID can be up to18 characters long.

Clear ID

This option clears the current set Unit ID.

Figure 126. Clear Unit ID and Cleared Unit ID screens

Set ID to Default

The Set ID to Default option returns the Unit ID to the factory default.

Figure 127. Set ID to Default screen

Once all changes have been made, Accept Settings must be selected before exiting the Unit ID menu. When all changes are saved, the transmitter will display the Settings Accepted screen.

Figure 128. Accept Settings and Accepted screens

Relay Options

The Relay Options menu allows the relays for both alarm levels to be configured. This menu is available only if the transmitter is equipped with the optional relays.

Figure 129. Relay Options screen

XNX relays can be set to Energized or De-energized. The default is De-energized. The two states for each relay are represented by the symbols for energized and for de-energized.

Figure 130. Alarm 1 Relay Current State and Setting New State screens

Use the switches to move to the desired alarm and use to select it. Use the switches to change the state of the relay. Use to accept the new state. Once the transmitter has accepted the new information, a Settings Accepted screen appears.

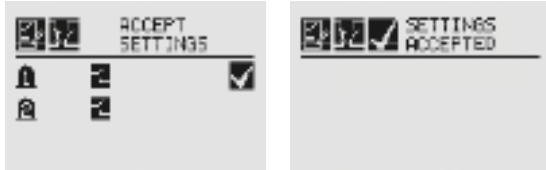

Figure 131. Accept New Alarm Relay Settings and new Settings Accepted screens

Fieldbus Options

The Fieldbus Options menu allows configuration of the HART address or the optional Modbus fieldbus address and baud rate.

Figure 132. Fieldbus Options screen

Select the Fieldbus Options icon to activate the HART/Modbus screens to allow selection of the protocols to be configured or changed. If the transmitter is configured without HART or Modbus, only the installed options will be visible.

Figure 133. HART Options screen

The HART menu provides the ability to select the HART mode. From the HART screen, use the switches to highlight the HART option, then select . This displays the HART address screen where the device address and whether the HART protocol is active in the unit can be set. To set the address, use the switches to highlight the number in the top line (between 0 and 63) and use to select it. Use the switches to decrease or increaset the value until the desired value appears. Use to select the value and move to the next setting.

Figure 134. HART Address and Address Value screens

Use the switches to move to the HART option and use to select it. Use the switches to scroll through the options until the desired option is highlighted. Use to accept the new state. See Local HART Interface and HART Protocol for more information on available HART modes.

Figure 135. HART Mode screens

Once the values for the HART address and Mode have been set, use the switches to navigate to the '✓' then select it to save the changes to the transmitter.

Figure 136. HART Settings Accepted screen

When the Modbus option is available, use the switches to move to the Modbus icon and use to select it. The Modbus option allows the address and communication baud rate to be set.

Figure 137. Modbus Options screen

From the Set Fieldbus Address screen, select ✓. To set the Fieldbus address, use the switches to move to the desired position and use ✓ to select it. Use the switches to decrease or increase the value until the desired value appears. Use ✓ to select the value and moves to the next setting.

Figure 138. Set Fieldbus Address and Address Value screens

The communications baud rate can be set from this screen. Use the switches to highlight the proper baud rate and select ✓.

Figure 139. Set Baud Rate screens

Once the values for the Fieldbus address have been set, use the switches to navigate to the '✓' then select it to save the changes.

Figure 140. Accept Settings and Fieldbus Address Settings Accepted screens

Configure Security

Configure Security is used to set or reset the level 1 and level 2 passcodes that control access to the configuration menus of the transmitter.

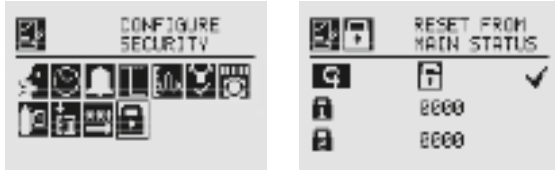

Figure 141. Configure Security screens

Easy Reset from Main Status

The Easy Reset from Main Status option controls the ability to reset faults, warnings, and alarms from the General Status screen (see The General Status Screen).

Use the switches and ✓ to select the lock icon. The Lock/Unlock screen will be displayed. Choose 'Lock' to prevent reset without password access. The 'Unlock' choice allows resets without requiring login or a passcode.

Figure 142. Lock/Unlock screen

Level 1 and Level 2 Passcodes

Level 1 and 2 passcode screens give the administrator the ability to assign new passcodes for either or both access levels.

From the Configure Security Screen, use the switches to highlight Passcode 1. Use to choose the first digit and the switches to decrease or increase the values. Use to accept the new value and move to the next digit. Repeat until all four digits have been selected. Follow the same procedure to change the Level 2 passcode.

Figure 143. Setting the Level 1 passcode

Use the switches to move to “Accept Settings” on the display. Choose to save the settings to the transmitter.

Figure 144. Accept Settings and Security Settings Accepted screens

Verifying the Configuration

Test Menu

The test menu icons are shown in this table:

Symbol	Description	Symbol	Description
	Inhibit		Force Relay
	Force mA Output		Alarm/Fault Simulation

WARNING

Warning: Keep the passwords in a secure area to prevent unauthorized access to the transmitter. If the passwords are lost, resetting the transmitter will require a service technician.

Inhibit

WARNING

Warning: When the transmitter is placed in Inhibit Mode, alarms are silenced. This will prevent an actual gas event from being reported. Inhibit Mode must be limited to testing and maintenance only. Exit Inhibit Mode after testing or maintenance activities.

Figure 145. Inhibit screen

The Inhibit mode is designed to prevent alarms from being triggered during testing or maintenance.

Figure 146. Inhibit menu

Use the switches to inhibit alarms by selecting Inhibit On with the . The confirmation screen appears.

Figure 147. Confirm Inhibit On screen

Select to place the transmitter alarms into inhibit mode. Select will cancel the choice and leave the alarms in normal operating mode.

Figure 148. Confirm Inhibit Off screen

To return from Inhibit mode to to the normal monitoring mode, select Inhibit Off with the . A confirmation screen appears.

Select to remove the transmitter from Inhibit mode. Select ‘X” to cancel the choice and leave the alarms in Inhibit mode.

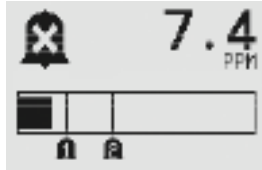

Figure 149. Inhibit Status screen

When the transmitter is in Inhibit mode, the General Status display will display the inhibit icon .

Force mA Output

CAUTION

Caution: The mA output set in this menu will revert to the normal operating values when exiting the Test Menu. For more information on setting the mA output levels for normal operation, see mA Levels.

Force mA Output allows peripheral devices driven by mA output from the transmitter to be tested. Based on the mA output values set in the mA Levels option (see mA Levels), the operator chooses the mA level to output to the device.

Figure 150. Force mA Output screen

The New mA Output screen shows the current mA output in the left column. The output can be controlled by changing the value in the column on the right.

Figure 151. New mA Output screen

Once the new value is input, use the switches to move to the '✓' and use the magnetic switch on the front panel to set the mA output.

Force Relays

CAUTION

Caution: Any relay conditions set in this menu will revert to the normal operating values when exiting the Test Menu. For more information on setting the relay options for normal operation, see Relay Options.

The Force Relay menu allows peripheral devices driven by relays from the transmitter to be tested. Depending on the relay options set in the Relay Options menu (see the Relay Options section), the relay will be open or closed.

Figure 152. Force Relays screen

The Relay State screen shows the current relay configuration in the left column. The output can be controlled by changing the value in the column on the right.

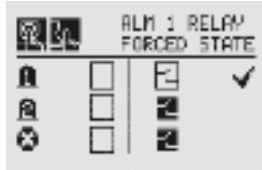

Figure 153. Relay State screen

Once the new value is input, use the switches to move to the '✓' and use the magnetic switch on the front panel to change the condition of the relay.

Alarm/Fault Simulation

Alarm and Fault simulation work in tandem with the previous sections (Force mA Output and Force Relays) to allow testing of the transmitter and the peripheral warning and safety devices. Figure 156 shows the menu choices for selecting an alarm or fault simulation.

Figure 154. Alarm/Fault Simulation screen

Selecting an alarm level to simulate activates a confirmation screen.

Figure 155. Alarm/Fault Simulation menu

Figure 156. Confirmation screen

Selecting ✓ will simulate the alarm from the transmitter. If the ✗ is selected, the simulation will be aborted.

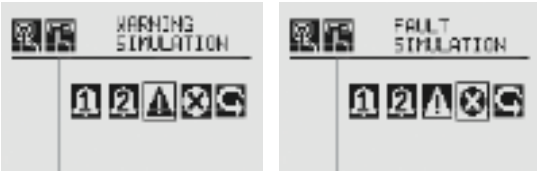

Figure 157. Warning and Fault Simulation screens

To simulate a Warning or Fault from the transmitter, select the appropriate icon from the menu.

Figure 158. Fault Simulation Confirmation screen

A confirmation screen will appear. Select ✓ to simulate the warning or fault from the transmitter. If the ✗ is selected, the simulation will be aborted. Use Alarm/Fault Reset to reset alarms, faults, or warnings generated by the simulation.

Figure 159. Alarm/Fault Reset screen

This confirmation screen will appear.

Figure 160. Alarm/Fault Reset screen

Select ✓ to reset the alarms, faults, or warnings generated by the simulation. If the ✗ is selected, the simulation continues.

⚠ CAUTION

Caution: Relays and LEDs will return to their initial states after simulations are completed unless faults and alarms are set to latching by the user.

⚠ WARNING

Warning: After changing parameters with a handheld device, verify that the parameter settings are correct at the transmitter.

Information Menu

The Information Menu Displays the current status information for these parmeters:

Symbol	Description	Symbol	Description
	Show Alarm/Fault Status		Show Gas Data
	Show Date/Time		Show Range/Alarm Settings
	Show Transmitter Data		Show mA Level Settings
	Show Transmitter Status		Show Relay Settings
	Show Sensor Data		Show Fieldbus Settings
	Show Sensor Status		Show Event History

Alarm/Fault Status

Figure 161. Alarm/Fault Status screen

Select Alarm/Fault Status to display the Alarm/Fault Status screen allowing faults and alarms to be reset.

Figure 162. Alarm/Fault Status screen

The '✓' will be highlighted. Select ✓ to reset all faults and alarms generated by the transmitter then return to the Alarm/Fault Status screen. Select the ✕ switch to return to the Alarm/Fault Status screen without resetting faults or alarms.

Date & Time

Figure 163. Date/Time screens

The Date and Time screens display the date and time in the formats currently set on the transmitter. See Set Date and Time.

Transmitter Data

Figure 164. Transmitter Data screen

Using the switches, the Transmitter Data displays the ID, part number, serial number, and version number of the firmware.

Figure 165. Transmitter ID, Part Number and Serial Number screens

Figure 166. Transmitter Software, 4-20 Monitor and Option Version screens

Transmitter Data is also used to update the configuration of the transmitter when an option board is added or changed. To add the new option, use the switches to navigate to the Option Revision screen, then swipe the magnetic switch on the front panel to display the Accept New Option Screen. The screen will show the current option (if any) and the newly installed option. Use the switches to highlight the option then swipe the magnetic switch on the front panel to accept the change. The transmitter will update the part number of the unit. The new option will then be operational.

Figure 167. Updating the Transmitter for Option Boards Added or Changed screens

Transmitter Status

Figure 168. Transmitter Status screen

Transmitter Status displays information about the transmitter including temperature, 4-20 mA output value, and supply voltage.

Figure 169. Transmitter Temperature and Supply Voltage screens

Sensor Data

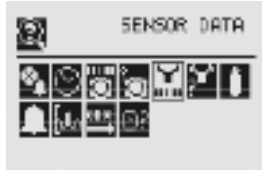

Figure 170. Sensor Data screen

Sensor Data displays information about the transmitter including sensor type and sensor software revision.

Figure 171. Sensor Type and Software screens

Sensor Status

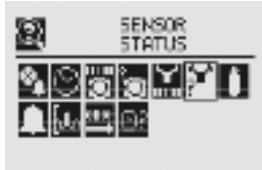

Figure 172. Sensor Status screen

Sensor Status displays the temperature of the sensor attached to the transmitter. When equipped with an EC or mV sensor, sensor life is also displayed.

Figure 173. Sensor Temperature screen

Gas Data

Figure 174. Gas Settings screen

Gas Data displays the current detectable gas as configured for the attached sensor.

Figure 175. Gas Abbreviation and Full Scale screens

Range/Alarm Settings

Figure 176. Range/Alarm Settings screen

Range/Alarm Settings displays the currently configured alarm information.

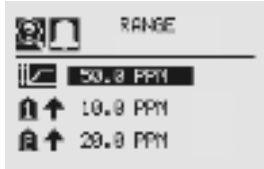

Figure 177. Alarm Display Rang screen

mA Level Settings

Figure 178. mA Level Settings screen

The mA Level Settings section shows the current values for mA output for Inhibit, Warning, and Overrange output.

Figure 179. mA Output Inhibit, Warning and Overrange screens.

Fieldbus Settings

Figure 180. Fieldbus Settings screen

Fieldbus Settings displays the current configuration of both HART and Modbus. To change the settings see Fieldbus Options. HART displays the current HART address assigned to the transmitter.

Figure 181. HART Configuration Settings screens

Modbus displays the current address and communication data rate assigned to the transmitter.

Figure 182. Modbus Configuration Display screen

Relay Data

The Relay Menu is enabled only if the transmitter is equipped with the optional relays.

Figure 183. Relay Data screen

Figure 184. Relay State screens

Relay Data displays the current setting of the optional relays on the transmitter. To change the relay settings, see Relay Options.

Event History

The Event History screen lists all events that are activated by the transmitter's settings. Five types of events are recorded: reset messages, alarm messages, warning messages, fault messages, and informational messages. The events are listed in chronological order beginning with the latest.

Events can be displayed through five browsing modes:

- all events in order of occurrence
- all events by hour
- all events by day
- only the alarm events, in order of occurrence
- only the fault events, in order of occurrence

The Event History screen groups events into chronological order (beginning from the unit's installation). Events can also be viewed by hour or by date.

Events listed in *hour* order are grouped without regard to date. For example, all events that have occurred between noon and 1:00 o'clock since the transmitter's installation can be isolated. To view all events in hour order:

1. Use the magnetic wand to filter the display by hour.
2. Navigate through the displayed times.

To isolate all of the events from a specific *day*:

1. Use the magnetic wand to filter the display by day.
2. Navigate through the displayed days.
3. Filter the list by all events. This will display all events that occurred on that day.

When the transmitter is configured with the Searchline Excel or Searchpoint Optima, the data reported in the event will be the fault code from the Searchline Excel or Searchpoint Optima.

The transmitter records up to 1280 events in a circular buffer. When event 1281 is recorded, the oldest event will be deleted from the list.

NOTE

Note: The leading zeros of faults and warnings are not displayed in the event list; i.e., Fault 011 is displayed as Fault 11.

Figure 185. Event History screen

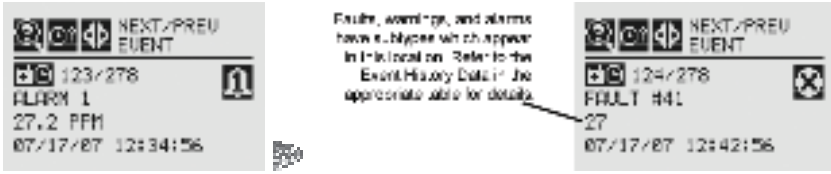

Figure 186. Chronological Event list

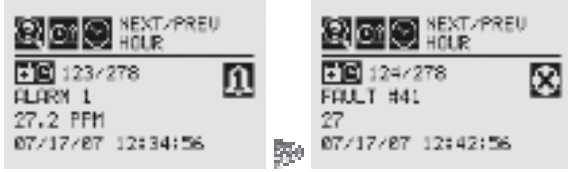

Figure 187. Chronological Event list by hour

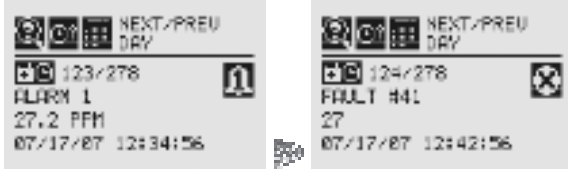

Figure 188. Chronological Event List by Day

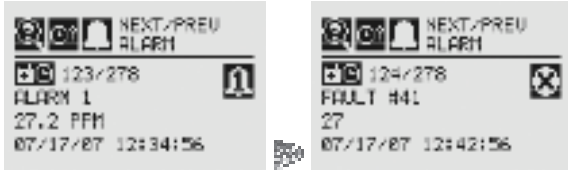

Figure 189. Chronological Alarm List

Figure 190. Chronological Fault list

Calibration

Gas Calibration Menu

Each of the sensor technologies supported by the transmitter uses unique calibration procedures. The description provided illustrates the transmitter interface with the sensor. The description does not replace the procedures found in each sensor's operating manual.

The Gas Calibration menu is used for Zero and Span calibration as well as functional testing (bump testing). The Gas Calibration menu is accessed from the Main Menu.

This table shows the Gas Calibration menu icons:

Symbol	Description
	Gas Calibration
	Bump Test
	Calibrate mA Output
	Soft Reset
	Align Excel

Figure 191. Gas Calibration Menu

For calibrating sticky gases (Cl_2, ClO_2, HF, HCl, HCN, F_2 and O_3), use Tox Kit part number XNXTOXKIT2.

Default Calibration Values

WARNING

Warning: Do not use the transmitter in oxygen-enriched atmospheres. Concentrations displayed will be adversely affected by oxygen depletion.

Warning: Take appropriate precautions when using toxic, flammable, or pressurized cylinders.

CAUTION

Caution: The calibration procedure must be performed only by qualified personnel.

The default calibration values for the "Calibration Required" diagnostic vary based on sensor type. This value can be reprogrammed in accordance with site requirements to ensure the highest level of safety. Before commissioning, verify the correct operation of each sensor by calibration with a certified test gas of known concentration. See Specifications for calibration gas specifications.

CAUTION

Caution: Recalibrate if the temperature of local environment has varied by more than ±15°C from the temperature of calibration.

CAUTION

Caution: If XNX is regularly exposed to wet or dusty conditions, refer to guidance in IEC 60079-29-2 for determining an appropriate calibration interval.

WARNING

Warning: Honeywell recommends periodic bump tests (every 30 days or in accordance with customer site procedures) to the sensor to insure proper operation and compliance with the functional safety rating of the installation.

Zero and Span Calibration for EC/mV Sensors and Searchpoint Optima

CAUTION

Caution: Before initial calibration, allow the sensor to stabilize for 30 minutes after applying power. When in zero and span calibration modes, the current output from the sensor is inhibited (default 2mA) to avoid false alarms.

For sticky gases (HCl, HF, Cl_2, ClO_2, HCN, F_2 and O_3), use PTFE tubing with short pieces of Tygon tube for the final connection (due to the inflexibility of PTFE). This minimizes adhesion of the gas to the tube surface and allows more accurate measurement. Use a one-inch section of Tygon tubing as a union sleeve to join the calibration cup's fitting and the PTFE tubing. Push the PTFE tubing against the fitting so they make secure contact as shown in the illustration. Gas should not be able to contact the Tygon sleeve. Attach the PTFE tubing to the regulator in the same manner.

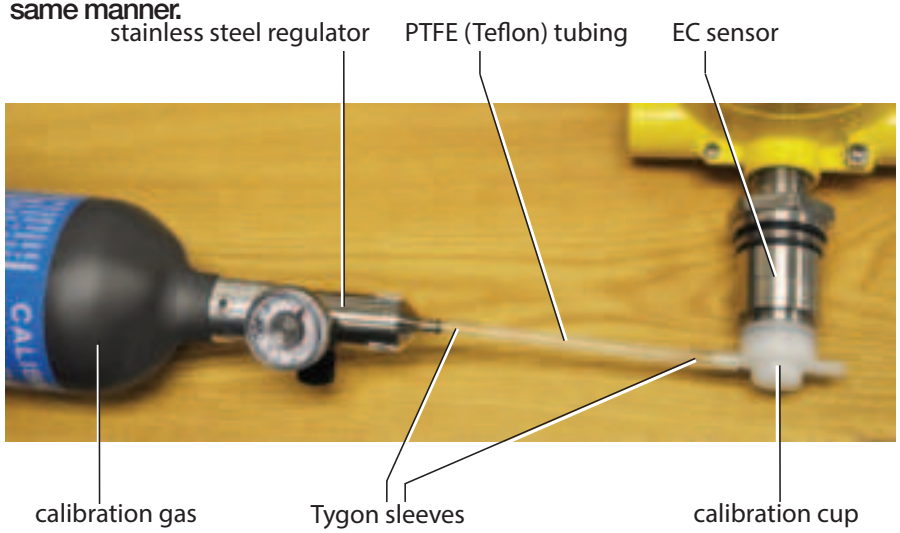

Figure 192. Joining the PTFE tubing with Tygon tubing

To calibrate the sensor, use an appropriate span gas cylinder, tubing, magnet, and calibration gas flow housing. Set the flow regulator to 300-375 ml/min for XNX EC sensors or 300-700 ml/min for XNX mV sensors. Use a compressed gas cylinder (20.9%Vol oxygen) to perform the zero calibration if the sensor is located in an area containing any residual amount of the target gas. If no residual gas is present, background air can be used to perform the zero calibration. Contact a Honeywell Analytics representative for details about suitable calibration kits. To calibrate the sensor, follow the steps in Calibration Procedure.

NOTE

Note: The oxygen sensor does not require a zeroing procedure. Background air (20.9%Vol oxygen) can be used to span the oxygen sensor in place of a compressed air cylinder (20.9%Vol oxygen). See the Sensor Data section for other sensors.

Note: EN performance standards require 10 minutes stabilization time for application of zero and span gas for performance-approved EC, mV, and IR sensors prior to calibration.

Calibration Procedure

This section outlines the steps for calibrating the transmitter's attached sensors.

NOTE

Note: Perform the zero calibration before the span calibration.

1. If using a compressed gas cylinder, push the calibration gas flow housing onto the bottom of the sensor and apply the gas.
2. Access the Gas Calibration Menu. This menu is for both zero and span calibrations.

Figure 193. Gas Calibration Menu

NOTE

Note: The Gas Calibration menu is for both zero calibration and span calibration.

Zero Calibration

Figure 194. Zero Calibration Screen

As the sensor detects the gas and the concentration increases, the values displayed will reflect the changing concentration. When the concentration values are stable (about 3 minutes), select ✓ to allow the transmitter to calculate the zero adjustment. Selecting ✗ will return to the Gas Calibration menu.

Figure 195. Zero Calibration in Progress

3. If the zero calibration is successful, the transmitter will display the Zero Passed screen.

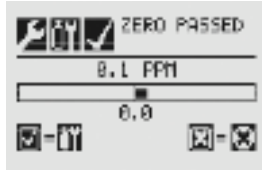

Figure 196. Zero Calibration Passed

Span Calibration

If a span calibration is not required, select the ✗ to skip the span calibration and return to the Calibration menu.

4. When the zero calibration is completed (or skipped), the Span Concentration screen appears. The gas concentration for the span gas calibration can be changed. If the span calibration is skipped, the Gas Calibration screen displays.

Figure 197. Span Gas Concentration Screen

5. Enter the concentration of the span gas by selecting ✓ to choose the first digit. Use the switches to decrease or increase the values. Use ✓ to accept the new value and move to the next digit. Continue until all digits have been selected.

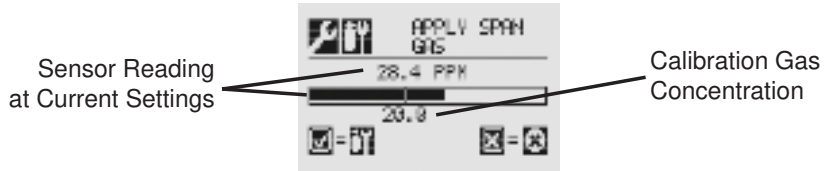

Figure 198. Span Calibration Screen

6. Apply the span gas. As the sensor detects the gas and the concentration increases, the values displayed will reflect the changing concentration. When the concentration values are stable, select ✔ to perform the span. The Span Calibration process also determines whether the sensor is within the proper range to accurately detect the target gas.
7. Selecting ✪ will cancel the span calibration and return to the Gas Calibration menu.
8. When the sensor has completed the calibration and the span algorithms have determined that it is within range, the Span Passed screen will appear.

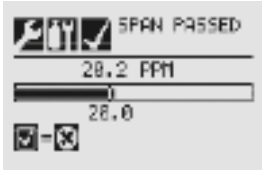

Figure 199. Span Passed Screen

If the calibration is not successful, the Span Failed screen will display. Selecting ✔ will return to the Span Concentration screen to begin the span calibration again. Selecting ✪ will exit Span Calibration and return to the Gas Calibration Menu.

Arrow indicates gas value is too low

Selecting ✔ returns to the Span Concentration screen

Figure 200. Span Calibration Failed

Once the zero gas and span calibrations are completed successfully, the user will be prompted to:

- exit with inhibit off
- exit with inhibit on, or
- not exit.

Figure 201. Span Calibration Failed

⚠ WARNING

Warning: When the transmitter is placed in Inhibit Mode, alarms are silenced. This will prevent an actual gas event from being reported. Inhibit Mode must be limited to testing and maintenance only. Exit Inhibit Mode after testing or maintenance activities.

Using the Calibration Cup

Refer to Figure 202 to attach the calibration cup:

1. Snap the calibration cup into the weather protector. The two protrusions on the cup fit into recesses in the weather protector.
2. Attach the hose from the gas cylinder to the calibration cup. Note that the cup's flow is unidirectional. There is an arrow on the bottom showing flow direction
3. Adjust the calibration flow rate[1].

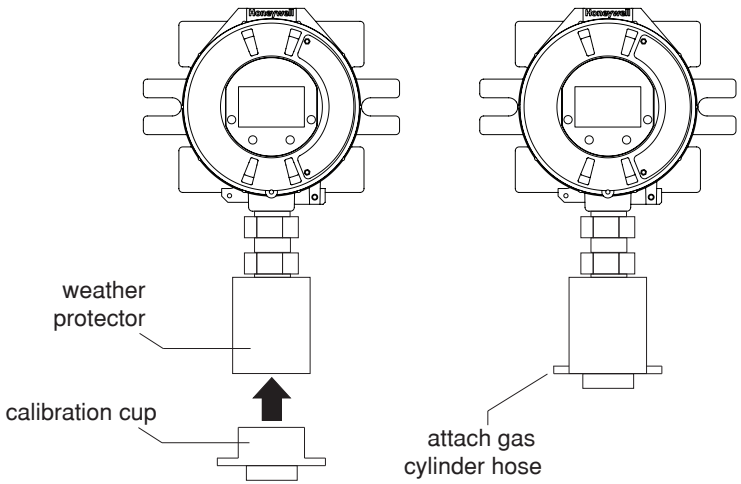

Figure 202. Attaching the Calibration Cup

1 300-375 ml/min for XNX EC sensors, 300-700 ml/min for XNX mV sensors, unless otherwise directed.

Zero and Span Calibration of EC Sensors

CAUTION

Caution: Before initial calibration, allow the sensor to stabilize for 30 minutes after applying power. When in zero and span calibration modes, the current output from the sensor is inhibited (default 2mA) to avoid false alarms.

Caution: Recalibrate if the temperature of local environment has varied by more than ±15°C from the temperature of calibration.

Hydrogen Sulfide

Hydrogen Sulfide sensors can be affected by extreme humidity changes. A sudden increase in ambient humidity can result in a short-term positive drift in the instrument's reading. A sudden decrease in ambient humidity can result in a short-term negative drift in the instrument's reading. These are most likely to be noticed during calibration with dry or cylinder gas.

When calibrating hydrogen sulfide cartridges, follow the procedure in Calibration Procedure. To zero the sensor, use a compressed gas cylinder of 20.9%Vol oxygen (not nitrogen). Do not use background air. If a span calibration is to be performed, apply the span calibration gas immediately after the zeroing procedure. Do not allow the sensor to return to ambient air conditions.

WARNING

Warning: Long-term exposure (>20 minutes) to concentrations exceediing the full-scale range of the H_2S sensor Type 2 can cause it to lose sensitivity. The measured value may then decrease even though high levels of toxic gas are still present. If such conditions can occur, set the control unit to latch at overrange. In standalone operation, set alarms to latching. When resetting the overrange or alarm, verify the correct operation of the transmitter. Before re-calibrating the transmitter, verify the absence of gas.

Hydrogen Cyanide

The span calibration can be performed using HCN from a cylinder at a suitable concentration. Adjust the span calibration set point in the instrument to match that of the concentration actually applied. Pay special attention to the following points:

1. Use the official calibration adaptor (S3KCAL) when applying cylinder gas to the sensor.
2. PTFE tubing should be used to minimise the effects of coating and gas absorption during the procedure.
3. Tubing lengths should be kept as short as possible.
4. Calibration gas should be flowed for a minimum of 5 minutes through the system before performing a span calibration.
5. A flow rate of 300 to 375 ml/min should be maintained throughout the calibration procedure.

Fluorine

The calibration is performed using 2 ppm (nominal) chlorine (Cl2). Honeywell Analytics strongly recommends that a suitable Cl2 generator be used for this operation. Adjust the span calibration set point in the instrument to match that of the concentration actually applied. Pay special attention to the following points:

1. Use the official calibration adaptor (S3KCAL) when applying cylinder gas to the sensor.
2. PTFE tubing should be used to minimise the effects of coating and gas absorption during the procedure.
3. Tubing lengths should be kept as short as possible.
4. Calibration gas should be flowed for a minimum of 5 minutes through the system before performing a span calibration.
5. A flow rate of 300 to 375 ml/min should be maintained throughout the calibration procedure.

Ethylene Oxide

CAUTION

Caution: Operation of the EtO sensor in a constant background of ethylene may result in baseline drift. under these conditions, the response of the sensor should be checked and calibrated more frequently.

CAUTION

Caution: Exposure of the EtO sensor to high concentrations of ethylene may reduce cell life. After such an exposure, check and if necessary replace the sensor.

To maximize the accuracy of the calibration, please follow the special process for calibration of EtO cartridges as follow:

Transportation and Installation

NOTE

Note: Ethylene oxide sensors are supplied on a transportation board in order to keep the cell biased at the correct level. Once removed from the transportation board the sensor should be fitted to the detector as soon as possible.

If the sensor is not fitted to the transportation board or a powered detector, its bias will decay and the sensor will take up to 24 hours to recover. During this period the sensor will not function as a gas detector, reporting a gas reading above full scale.

When calibrating ethylene oxide sensors, the following should be taken into account:

1. Use the official calibration adaptor (S3KCAL) when applying cylinder gas to the sensor.
2. PTFE tubing should be used to minimise the effects of coating and gas absorption during the procedure.
3. Tubing lengths should be kept as short as possible.
4. Calibration gas should be flowed for a minimum of 5 minutes through the system before performing a span calibration.

5. A flow rate of 300 to 375 ml/min should be maintained throughout the calibration procedure.

Zero Only Calibration

If the sensor is to be zero calibrated only (no span calibration), the calibration should be performed in clean ambient air or clean air (not nitrogen) humidified to approximately ambient humidity levels.

Full Calibration

If performing a full calibration (zero and span) the following procedure should be used:

1. Apply clean, dry air (not nitrogen) to the sensor for 5 minutes. Do not use background air.
2. Zero the sensor in accordance with the detector's instructions to confirm the zero calibration.
3. Apply the span calibration gas to the sensor immediately after the zeroing procedure. Do not allow the sensor to return to ambient air conditions between steps 2 and 3.
4. Apply the span gas to the sensor for five minutes before commencing the span calibration in accordance with the detector's instructions to confirm the span calibration.
5. After the span calibration, the sensor should be allowed to recover in clean ambient air, or clean air humidified to approximately ambient humidity levels for fifteen minutes and then should be zero calibrated under these conditions. Note that this does not affect the span sensitivity of the instrument.

Ozone

The calibration is performed using 0.2 ppm ozone (O_3). Honeywell Analytics strongly recommends that a suitable O_3 generator be used for this operation such as the ACD Genie O_3. This device generates ozone at the target concentration of 0.2 ppm and maintains a regular flow rate throughout the calibration. During the calibration, please pay attention to the following points:

1. PTFE tubing should be used to minimise the effects of coating and gas absorption during the procedure.
2. Tubing lengths should be kept as short as possible.
3. The flow rate of the ADC Genie O_3 generator depends on the concentration set and cannot be adjusted by the user. At a concentration of 0.2 ppm, the flow rate will be 1 lpm.
4. Calibration gas should be flowed for a minimum of 5 minutes through the system before performing a span calibration.
5. Refer to the manufacturer's operating instructions supplied for full details on the operation of the O_3 generator.

705/705HT Calibration

For complete calibration and configuration information, see the *Type 705 Operating Instructions* (Honeywell part number 00705M5002).

Sensepoint/Sensepoint HT Calibration

For complete calibration and configuration information, see the *Sieger Sensepoint Technical Handbook* (Honeywell part number 2106M0502).

NOTE

Note: When used with XNX, the reaction time using the calibration cap may exceed 60 seconds.

Searchpoint Optima Plus Calibration

Complete calibration and configuration information can be found in the Searchpoint Optima Plus Operating Instructions (Honeywell part number 2108M0905). If properly installed and maintained, the Searchpoint Optima Plus sensor will not require routine calibration. This is due to the inherent stability of the IR absorption process and the unit's fully compensated optical configuration.

1. From the Calibration menu, select the Gas Calibration option.

Figure 203. Calibration menu

Figure 204. Gas Calibration menu

2. Perform a zero calibration. When concentration values are stable, select ✓ for XNX to calculate the zero adjustment

Figure 205. Apply Zero Gas screen

3. Select ✪ to return to the Gas Calibration menu. If the zero calibration was successful, the transmitter will display the Zero Passed screen

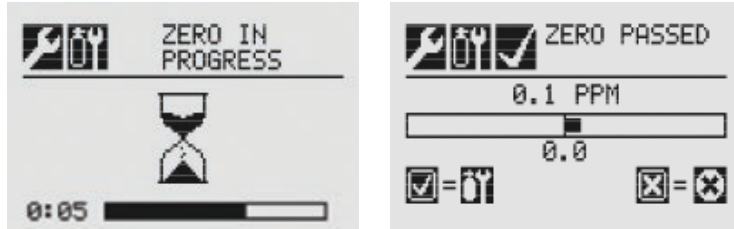

Figure 206. Zero Calibration screens

4. Begin the span calibration by entering the concentration value of the calibration gas: Select ✓ to choose the first digit. Use +/- to increase or decrease values. Select ✓ to accept the value and move to the next digit. Use the calibration cover (Honeywell part number 2108B0272) to perform a span calibration at a flow regulator of 1 LPM. (If a span calibration is not required, select ✪ to return to the calibration menu.)

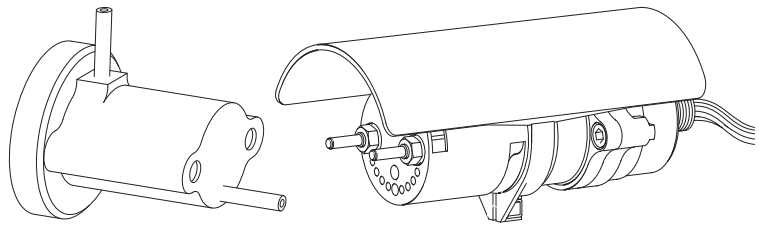

Figure 207. Searchpoint Optima Plus

5. Continue until all three digits have been entered.

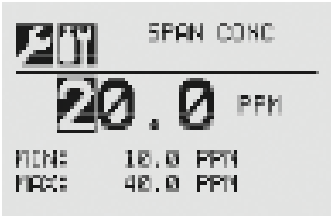

Figure 208. Span Concentration screen

6. Apply the span gas. When concentration values are stable, select ✓ to calculate the span adjustment. This process also determines if the sensor is within range to accurately detect the target gas.

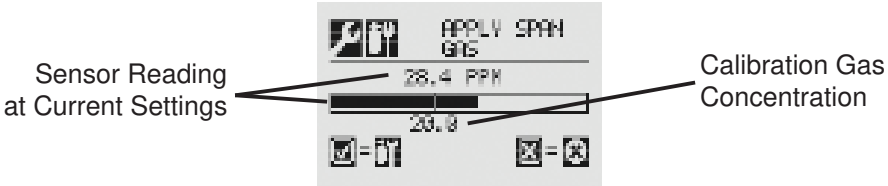

Figure 209. Span adjustment calculation

7. Select ⊗ to return to the Gas Calibration menu. If the calibration is not successful, the Span Failed screen will be displayed.

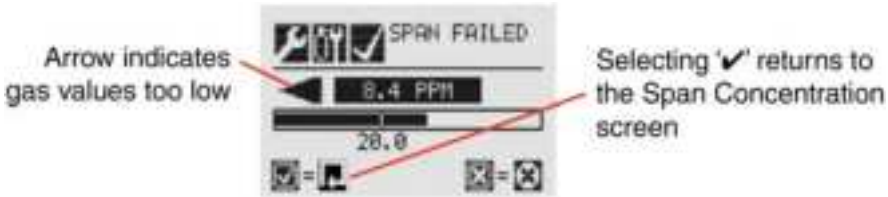

Figure 210. Span Failed screen

Select ✓ to return to the Span Concentration screen to repeat the span calibration.

Select ⊗ to exit Span Calibration and return to main Calibrate screen. If Span Calibration is exited, the previous calibration values will be used. Select ✓ to return to the Span Concentration screen.

If the calibration is successful, the Span Passed screen will be displayed.

Figure 211. Span Passed screen

8. Exit the Calibration Menu. After the zero and span calibrations have been successfully completed, the user will be prompted to:
   - Exit and turn alarm and fault inhibit off,
   - Exit and leave the transmitter in inhibit mode. or
   - Not exit

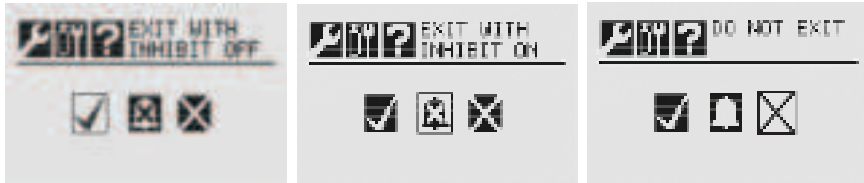

Figure 212. Calibration exit options

WARNING

Warning: When the transmitter is placed in Inhibit Mode, alarms are silenced. This will prevent an actual gas event from being reported. Inhibit Mode must be limited to testing and maintenance only. Exit Inhibit Mode after testing or maintenance activities.

Zero and Span Calibration for MPD Sensors (not part of the approval by DEKRA Testing and Certification GmbH)

CAUTION

Caution: Extended or frequent exposure to elevated concentrations of combustible gases may affect sensor sensitivity. Verify sensor performance by frequent calibration.

Caution: Before initial calibration, allow the sensor to stabilize for 30 minutes after applying power. When in zero and span calibration modes, the current output from the sensor is inhibited (default 2mA) to avoid false alarms.

The Gas Calibration menu is for both zero and span calibrations. This section describes how to calibrate MPD flammable sensors fitted to the transmitter. The calibration adjustments are made on the transmitters display. Gassing is performed at the sensor, which may be locally or remotely located.

The following equipment is required:

- Flow housing (Honeywell part number 1226A0411)
- Test gas
- Regulator

NOTE

Note: Use the zero gas and span gas at about the same humidity levels to avoid erroneous cell responses.

1. If there is a weatherproof cap on the MPD, remove it.
2. Fit the flow housing onto the MPD.

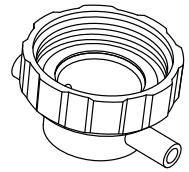

Figure 213. Flow housing

Reverse the cap removal procedure. Figure 214 shows the flow housing accessory fitted to the MPD.

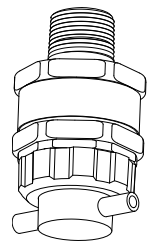

Figure 214. MPD with Flow Housing

NOTE

Note: The Gas Calibration menu is for both Zero and Span Calibration.

3. Connect the flow housing (using either gas pipe) to the regulated cylinder containing a known concentration of the target gas at approximately the sensor alarm point, e.g., 50% LEL methane in air.

WARNING

Warning: As some test gases are hazardous, exhaust the flow housing outlet to a safe area.

4. Follow the procedure in the Zero and Span Calibration for EC Sensors, mV Sensors, and Searchpoint Optima section for both zero and span calibrations.
5. Apply the target gas to the sensor. Pass the gas through the flow housing at a rate of 300-700 ml/min.
6. Calibrate sensors at concentrations representative of those to be measured. When feasible, calibrate the sensor with the target gas it is to detect.
7. Ensure that the sensor and the vicinity around it is clear of all traces of the calibration gas before continuing. This is to avoid triggering spurious alarms. If the calibration fails at any point, discard the cartridge and replace it with a new one (see the MPD Sensor Cartridge Replacement section) .
8. Remove the test equipment, refit the weatherproof cap to the sensor (if it was previously removed for the test), and return the system to normal operation.

MPD Flammable Sensor Operational Life

The pellistors used in flammable gas sensors can suffer from a loss of sensitivity when in the presence of poisons or inhibitors, e.g., silicones, sulfides, chlorine, lead, or halogenated hydrocarbons. The pellistors are poison-resistant to maximize the operational life of the flammable sensor. The typical operating life of the pellistor sensor used in the MPDAM-CB1 is 60 months.

Cross-calibration Procedure for MPDAM-CB1

CAUTION

Caution: When a user calibrates a sensor using a different gas, the responsibility for identifying and recording the calibration rests with the user. Refer to local regulations where appropriate.

When the MPDAM-CB1 Combustible LEL sensor is to be calibrated with a gas which is different from the gas or vapor to be detected, follow this cross-calibration procedure:

These star rating tables list the gases according to the reaction they produce at a given detector.

Gas	Star Rating
Acetone	4*
Ammonia	7*
Benzene	3*
Butanone	3*
Butane	4*
Butyl acetate	1*
Butyl acrylate	1*
Cyclohexane	3*
Cyclohexanone	1*
Diethyl ether	4*

Gas	Star Rating
Ethane	6*
Ethanol	5*
Ethyl acetate	3*
Ethylene	5*
Heptane	3*
Hexane	3*
Hydrogen	6*
Methane	6*
Methanol	5*
MIBK	3*

Gas	Star Rating
Nonane	2*
Octane	3*
Pentane	4*
Propane	5*
Propan-2-ol	4*
Styrene	2*
Tetra hydrafuran	4*
Toluene	3*
Triethylamine	3*
Xylene	2*

An eight-star (8*) gas produces the highest output, while a one-star (1*) gas produces the lowest. (These are not applicable at ppm levels.)

To cross-calibrate the MPDAM-CB1 combustible gas sensor:

1. Obtain the star rating for both the test gas and the gas to be detected from the Gas Star Ratings table on the previous page.
2. Set the gas selection to the star rating which is the same star rating of the gas being detected.
3. These values may then be used in the following table to obtain the required meter setting when a 50% LEL test gas is applied to the detector.

Test Gas Meter Settings[1]								
Star Rating of Calibration Gas	Star Rating of Gas to be Detected							
	8*	7*	6*	5*	4*	3*	2*	1*
8*	50	62	76	95	-		-	-
7*	40	50	61	76	95	-		-
6*	33	41	50	62	78	95	-	
5*	26	33	40	50	63	79	95	-
4*	-	26	32	40	50	63	80	95
3*	-	-	26	32	40	50	64	81
2*	-	-	-	25	31	39	50	64
1*	-	-	-	-	25	31	39	50

[1] Use these settings only with 50% LEL calibration gas concentration.

4. If a sensor is to be used to detect a gas other than that for which it was calibrated, the required correction factor can be obtained from the following multiplier factors table. Multiply the meter reading by this number to obtain the true gas concentration.

Multiplier Factors								
Sensor calibrated to detect	Sensor used to detect							
	8*	7*	6*	5*	4*	3*	2*	1*
8*	1.00	1.24	1.52	1.89	2.37	2.98	3.78	4.83
7*	0.81	1.00	1.23	1.53	1.92	2.40	3.05	3.90
6*	0.66	0.81	1.00	1.24	1.56	1.96	2.49	3.17
5*	0.53	0.66	0.80	1.00	1.25	1.58	2.00	2.55
4*	0.42	0.52	0.64	0.80	1.00	1.26	1.60	2.03
3*	0.34	0.42	0.51	0.64	0.80	1.00	1.27	1.62
2*	0.26	0.33	0.40	0.50	0.63	0.79	1.00	1.28
1*	0.21	0.26	0.32	0.39	0.49	0.62	0.78	1.00

Since combustible sensors require oxygen for correct operation, use a mixture of gas in air for calibration. Assuming average sensor performance, the sensitivity information in these tables is normally accurate to ±20%.

⚠ CAUTION

Caution: When calibrating a sensor, the reaction time of the sensor should be checked by measuring the time taken from applying test gas to sensor head to achieving a stable reading. Stability should be achieved within one minute. If this reaction time becomes unduly longer, the sensor should be replaced.

Example:

If the target gas to be detected is butane and the calibration gas available is methane (50% LEL):

1. Look up the star rating for each gas in the first table:

   Butane 4* and Methane 6*.

2. Check the meter settings for 50% LEL calibration gas in the second table: 78.
3. Set the meter to 78% to give an accurate reading for butane using 50% LEL with methane as the calibration gas.

NOTE

Note: Calibrate the sensor at the approximate alarm levels to allow for non-linearity of the sensors at gas concentrations above 80% LEL.

EC Sensor Operational Life

The typical life of a toxic gas sensor depends on the application, frequency, and amount of gas exposure. Under normal conditions (3 month visual inspection and 6 month test/recalibration), the toxic sensor has an expected life equal to or greater than these lifetimes:

- 12 months for ammonia, hydrogen chloride, and hydrogen fluoride sensors (see further ammonia information below).
- 18 months for fluorine and ozone sensors.
- 24 months for chlorine dioxide, oxygen, and other toxic sensors.

See the Maintenance section for sensor replacement procedures.

CAUTION

Caution: Oxygen deficient atmospheres (less than 6%V/V) may result in inaccurate readings and substandard performance.

Ammonia electrochemical cells are reliable and suitable for applications where no background concentration of ammonia exists. Under these conditions the cells are expected to operate for 12 to 24 months. These ammonia cells are of the consumptive type. Their operating life can be adversely affected by continuous or excessive exposure to ammonia, or by prolonged exposure to extremes of temperature and/or humidity.

To ensure continued detection availability, bump test the sensors regularly and implement an appropriate cell replacement program.

Functional Gas Testing (Bump Testing)

WARNING

Warning: Honeywell Analytics recommends bump testing of ClO_2, Cl_2, HF, HCl, HCN, F_2 and O_3 sensors frequently and in accordance with customer site procedures to ensure proper operation and compliance with the functional safety rating of the installation.

Warning: Take appropriate precautions with cylinders of flammable or toxic gases. The calibration procedure must be performed only by Honeywell-trained personnel.

Figure 215. Bump Test Menu

WARNING

Warning: Exposure to desensitizing or contaminating substances or concentrations causing operation of any alarm may affect sensor sensitivity. Following such events, verify sensor performance by performing a bump test.

Test the sensor frequently to ensure that the system is operating properly. Different sensor types may require more frequent maintenance, depending on the environmental conditions and the gases present. The weatherproof cap has a spigot for attaching tubing from a gas cylinder. This may be used to bump test the sensor. However, environmental conditions may make this unsuitable for some gas types or applications. It is the responsibility of the user to ensure suitability of this method for each application.

1. When bump test gas is applied to the sensor, the bump test screen displays the current reading of the sensor and the peak reading that occurred during the bump test.

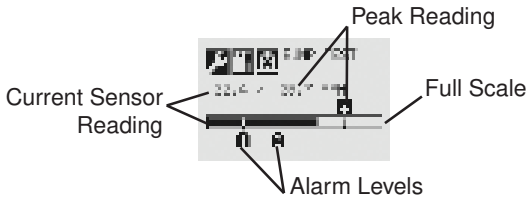

Figure 216. Bump Test Screen

2. If the difference between the reading and the applied gas concentration is outside the acceptable limits for the application, follow the procedures for zeroing and calibrating the sensor (see the Zero and Span Calibration for EC/mV Sensors section).
3. If the reading is still inaccurate, replace the sensor (see the MPD Sensor Cartridge Replacement section or EC Sensor Cell Replacement section as appropriate).

Once the bump test is completed successfully, the transmitter will exit the calibration procedure. Before returning to the Gas Calibration menu, the user will be prompted to exit and turn alarm and fault inhibit off, exit and leave the transmitter in inhibit mode, or not exit.

CAUTION

Caution: Exiting before the gas level has fallen below the level of Alarm 1 will cause the transmitter to go into alarm.

Figure 217. Exiting the calibration procedure

Calibrate mA Output

Use Calibrate mA Output to adjust the milliamp output to provide the correct output levels at peripheral devices connected to the transmitter.

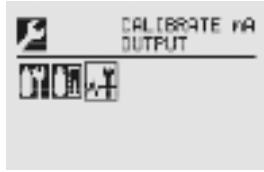

Figure 218 Calibrate mA Output Menu

To adjust the 4mA output, use the switches to increase or decrease the output, then use to accept the new value and move to the 20mA setting or to discard the selection and return to the previous menu.

Figure 219. Calibrate mA Output Screens

During installation, an mA meter must be connected in series with the 4-20 mA loop as shown below.

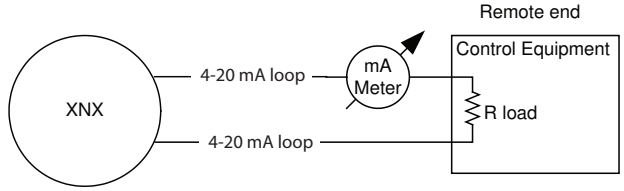

Figure 220. 4-20 mA loop with mA meter

NOTE

Note: Calibrated mA output is required for proper operation of internal diagnostics.

An F165 fault will be reported if the 4-20 mA calibration fails.

Align Excel (Searchline Excel)

Figure 221. Align Excel Menu

For detailed information on aligning the Searchline Excel, see the *Searchline Excel Technical Manual* (Honeywell part number 2104M0506).

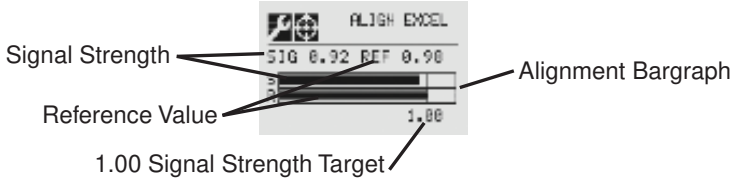

Figure 222. Align Excel Screen

Align the unit using the information found in the Searchline Excel manual. As the alignment is performed, the transmitter display will indicate the signal strength in the form of a bar graph. Align the Excel until the signal strength bar graph reaches or exceeds 1.00 as shown on the display.

Soft Reset

(Searchline Excel and Searchpoint Optima Plus only)

Figure 223. Soft Reset Menu

For transmitters connected to a Searchline Excel or Searchpoint Optima Plus sensor, the Soft Reset sends these infrared devices a signal to restart the sensor.

Figure 224. Soft Reset Sensor Screen

Maintenance

WARNING

Warning: When servicing or replacing sensors, reduce the risk of ignition in hazardous atmospheres by declassifying the area or disconnecting the equipment from the supply circuit before opening the sensor enclosure. Keep the assembly tightly closed during operation.

Warning: Take care when handling sensors as they may contain corrosive solutions. Do not tamper or in any way disassemble the sensor cell. Do not expose to temperatures outside the recommended range. Do not expose the sensor to organic solvents or flammable liquids.

Warning: At the end of their working lives, sensors must be disposed of in an environmentally safe manner, in accordance with local waste management requirements and environmental legislation. Alternatively, sensors may be securely packaged, clearly marked for environmental disposal, and returned to Honeywell Analytics. Do not incinerate sensors as they may emit toxic fumes.

Warning: Verify all outputs, including display, after installation, after service events, and periodically to ensure the safety and integrity of the system.

Warning: Safety related output functions must be tested annually.

CAUTION

Caution: The following procedure must be followed carefully and performed only by suitably trained personnel. A fault condition will be signaled by the sensor if it is removed with the unit under power.

NOTE

Note: If the power-on-self-test was skipped during maintenance activities, restart the transmitter.

MPD Sensor Cartridge Replacement

Using Figure 225 as a guide, follow this procedure:

1. Verify that the label on the new sensor is the correct gas type.
2. Remove power from the transmitter.
3. Unscrew the Weatherproof Cap (if equipped), loosen the retainer locking screw, and unscrew the sensor retainer.
4. Remove the old sensor cartridge by pulling without twisting.
5. Slide the replacement into the MPD body. Align the tab with the alignment slot, then press the sensor cartridge firmly to seat it into the body.
6. Refit the sensor retainer, tighten the locking screw.
7. Recalibrate the MPD sensor following the procedure in the Calibration Procedure section.
8. Refit the Weatherproof Cap (if equipped).

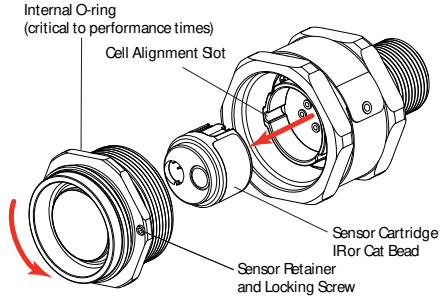

Figure 225. Removing the plug-in sensor

EC Sensor Cartridge and Cell Replacement

CAUTION

Caution: For toxic ells, remove the shorting clip from the bottom of the cell prior to installation. No shorting clip is provided with oxygen cells..

The serviceable sensor allows replacement of the cell inside the sensor. The cell must be replaced with one of the same type as the original.

When replacing oxygen (O_2) sensor cells, the initial warm-up time is between 10 and 15 minutes. This warm-up is required only after sensor cell replacement.

NOTE

Note: Always install the replacement cartridge by the INSTALL BY date shown on the cartridge packaging, which is typically 6 months from the date of manufacture. For certain regions, it is permissible for H2S cartridges only, for this to be extended to 12 months from the date of manufacture, provided that they are stored between -10°C to +30°C and 20 to 80 %RH..

Replacing the Sensor Cell

To replace the cell follow this procedure:

1. Unscrew the Weatherproof Cap, loosen the sensor retainer locking screw, and unscrew the sensor retainer.
2. Remove the old sensor by pulling without twisting.
3. Unscrew the sensor cap.
4. Remove the old cell by pulling without twisting.
5. Verify that the new cell is the same type as the old one.
6. Plug the new cell into the sensor. Align the sensor pins with the connector holes in the PCB.
7. Refit the sensor into the transmitter ensuring that the pins are fully aligned before gently pushing it fully home.
8. Sensor warm-up will begin and the display will alternate between two screens: “Fault 151” and “WARM.”

Figure 226. Sensor screens during warmup

9. Follow the procedure to accept the new sensor in the Accept New Sensor Type section.
10. Recalibrate the sensor following the procedures in the Zero and Span Calibration for EC/mV Sensors, and Searchpoint Optima section.

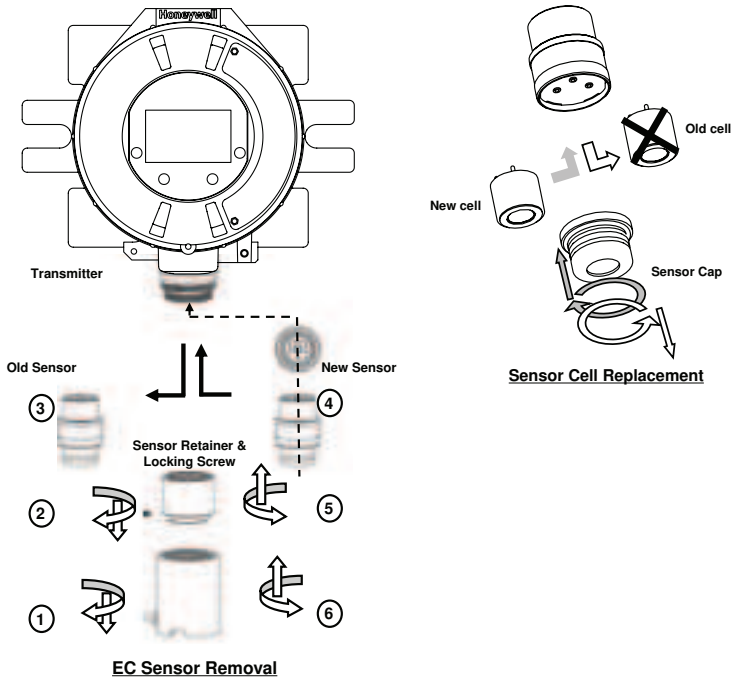

Figure 227. XNX EC sensor and cell replacement

Replacing with a Different Sensor Type

When replacing an EC cartridge with one of a different target gas, proceed as described in the previous section.

Figure 228. Sensor screens during warmup

Note that the XNX Transmitter will display the Fault F151 screen and the message “G:TBV:xxx”, where “xxx” is the target gas of the new cartridge. Enter the menu system and select Accept New Sensor Type and then calibrate the sensor as described in the Calibration Prodedure section.

Warnings and Faults

Warning Messages

Warning	Description	Applicable Sensors	Latching / Non-Latching	Frequency of Diagnostic	Event History Data	Action For Resolution
W001	XNX® 24 VDC Supply Bad	All	Non-latching	2 seconds	XNX supply voltage x1000	Check wire of 24V power supply to XNX as well as power supply operation.
W002	XNX Temperature Error	All	Non-latching	2 seconds	XNX temperature (Celsius)	Check location for heat sources. Fit with sunshade or other protection. Change location of XNX. Check temperature in Info->Transmitter Status to ensure temperature is being measured properly.
W003	Simulated Warning/Fault	All	Non-latching	Enabled by user	0	Performing an alarm/fault reset will clear all simulation.
W005	Sensor Temperature Error	Optima	Non-latching	XNX polls sensor every 2 seconds, diagnostic frequency controlled by sensor	Sensor fault or warning code (Note 4)	Check location for heat sources. Fit with sunshade or other protection. Change location of XNX. Check temperature in Info->Sensor Status to ensure temperature is being measured properly.
	Sensor Temperature Error	Excel	Non-latching	XNX polls sensor every 2 seconds, diagnostic frequency controlled by sensor	Sensor fault or warning code (Note 4)	Check location for heat sources. Fit with sunshade or other protection. Change location of XNX. Check temperature in Info->Sensor Status to ensure temperature is being measured properly.
	Sensor Temperature Error	ECC	Non-latching	2 seconds	Sensor temperature (Celsius)	Check location for heat sources. Fit with sunshade or other protection. Change location of XNX. Check temperature in Info->Sensor Status to ensure temperature is being measured properly.
W006	Negative Drift	ECC, mV	Non-latching	2 seconds	Raw gas concentration of sensor	Check sensor location for external interference. Perform zero calibration. If problem persists after zero calibration and no interference exists, replace sensor.
	Negative Drift	Optima, Excel	Non-latching	XNX polls sensor every 2 seconds, diagnostic frequency controlled by sensor	Sensor fault or warning code	Check sensor location for external interference. Perform zero calibration. If problem persists after zero calibration and no interference exists, replace sensor.
W007	Calibration Required	All	Non-latching	2 seconds	Number of days remaining until calibration expires, negative = number of days expired	Time since the last span calibration has exceeded a defined limit. Performing a successful span calibration will clear the condition. The limit is the user-defined calibration interval. W007 can be disabled by setting the calibration interval to 0.

Warning	Description	Applicable Sensors	Latching / Non-Latching	Frequency of Diagnostic	Event History Data	Action For Resolution
W009	Sensor 24 VDC Supply Bad	Optima, Excel	Non-latching	XNX polls sensor every 2 seconds, diagnostic frequency controlled by sensor	Sensor fault or warning code (Note 4)	Check wire of 24V power supply to XNX as well as power supply operation. Also check wiring between XNX and Optima/Excel.
W010	Sensor Path Obscured	Optima	Non-latching	XNX polls sensor every 2 seconds, diagnostic frequency controlled by sensor	Sensor fault or warning code (Note 4)	Check location for external interference. Check sensor for dirty windows.
	Beam Block	Excel	Non-latching	XNX polls sensor every 2 seconds, diagnostic frequency controlled by sensor	Sensor fault or warning code (Note 4)	Check location for external interference or obstructions in the IR path. Check sensor for dirty windows. Check Excel alignment.
W011	Sensor Internal Lamp Issue	Optima	Latching	XNX polls sensor every 2 seconds, diagnostic frequency controlled by sensor	Sensor fault or warning code (Note 4)	Remove and return to Honeywell for repair.
W012	Excessive Float	Optima, Excel	Non-latching	XNX polls sensor every 2 seconds, diagnostic frequency controlled by sensor	Sensor fault or warning code (Note 4)	Check sensor location for external interference, check sensor for operation and re-zero where appropriate.
W013	Sensor Loop Failure, (Sensor is losing/ has lost mA output signal. These are detected by Optima and Excel.	Optima, Excel	Latching	XNX polls sensor every 2 seconds, diagnostic frequency controlled by sensor	Sensor fault or warning code (Note 4)	Check that supply voltage is stable. Check wiring between Optima/ Excel and XNX. Check loop impedance of wiring. Check that switches S3 and S4 are set correctly. If the switch settings need to be changed, power down the transmitter before changing the switch settings. Once the problem has been resolved, a Soft Reset must be performed for the Calibration menu to clear W013.
W014	Sensor Real Time Clock issue	Excel	Non-latching	XNX polls sensor every 2 seconds, diagnostic controlled by sensor	Sensor fault or warning code (Note 4)	Reset “date and time” in Excel, re-cycle Excel power and confirm “date and time.” If not retained, remove and return to Honeywell for repair.

Warning	Description	Applicable Sensors	Latching / Non-Latching	Frequency of Diagnostic	Event History Data	Action For Resolution
W015	Sensor Internal Failure	Optima, Excel	Latching and Non-latching	XNX polls sensor every 2 seconds, diagnostic frequency controlled by sensor	Sensor fault or warning code (Note 4)	Remove and return to Honeywell for repair.
	Sensor has an internal software error	Excel	Latching	XNX polls sensor every 2 seconds, diagnostic frequency controlled by sensor	Sensor fault or warning code (Note 4)	Cycle Excel power and confirm “fault cleared.” If not, replace sensor.
W016	Sensor Installation Not Complete	Excel	Non-latching	XNX polls sensor every 2 seconds, diagnostic frequency controlled by sensor	Sensor fault or warning code (Note 4)	Check Excel alignment. Perform a zero calibration.
W018	General Diagnostics	Optima, Excel	Non-latching	XNX polls sensor every 2 seconds, diagnostic frequency controlled by sensor	Sensor fault or warning code (Note 4)	Check sensor connections, check sensor operation, fit replacement sensor, replace personalty board.
W019	Sensor Internal 5V Power Supply Defect	Excel	Non-latching	XNX polls sensor every 2 seconds, diagnostic frequency controlled by sensor	Sensor fault or warning code (Note 4)	Remove and return to Honeywell for repair.
W020	Forced mA Timeout	All	Latching	1 second	Forced mA	Indicates that a forced mA condition was left on for more than 15 minutes. No action required as mA operation will be returned to normal automatically.
W021	Forced Relay Timeout	All	Latching	1 second	Forced relay status, 1=Alarm1 on, 2=Alarm2 on, 4=Fault on	Indicates that a forced relay condition was left on for more than 15 minutes. No action required as relay operation will be returned to normal automatically.
W022	mV Sensor Calibration Needed	mV	Latching	When user changes sensor type or gas	1=new sensor, 2=changed personality, 3=changed gas	Generated after accepting a new mV sensor or changing the mV sensor type or changing the mV gas selection. This is a warning to user that a span calibration should be performed. If a span calibration is not performed, the default calibration values will be used.

Warning	Description	Applicable Sensors	Latching / Non-Latching	Frequency of Diagnostic	Event History Data	Action For Resolution
W023	Low Optical Sample Signal	Excel	Non-latching	XNX polls sensor every 2 seconds, diagnostic frequency controlled by sensor	Sensor fault or warning code (Note 4)	Check location for external interference or obstructions in the IR path. Check sensor for dirty windows. Check Excel alignment. Check Beam Block Low Signal Percentage setting in the transmitter.
W024	Reflex Failure Warning	ECC	Latching	Dependent on sensor, typically 8 hours; Once fault is detected: every 15 minutes	0	ECC sensor is nearing end of life. Replace sensor.
W025	Safety variable fail warning	All	Latching	2 seconds	Note 3	Contact Honeyewell Analytics Service Department.

Notes

Note 3:

Subtypes	Decimal	Description
Fault 2 Event Bits	1	CRC error in safety critical RAM block
	2	Error reloading safety critical RAM block from EEPROM
	4	Error loading data from Personality board
	8	Excel signal level has been below the low signal level threshold for at least 24 hours
	16	Excel beam blocked
	32	Personality board error code > 0
	64	Option board error code > 0
	128	IR mA input > 1 mA and < 3.4 mA
	256	IR mA input < 1.0 mA
	512	IR forced 10 mA not within +/-1 mA
	1024	gains from PGA don't match local copy
	2048	error reading or writing EEPROM
	4096	ECC reflex failure
	8192	RAM test failure
	16384	Program memory CRC failure
	32768	Op code test failure
Fault 3 Event Bits	1	Interrupt integrity test failure

Note 4:

Optima and Excel fault and warning codes are displayed in the Event History data field.

Fault Messages

Fault	Description	Applicable Sensors	Latching / Non-Latching	Frequency of Diagnostic	Event History Data	Action For Resolution
F101	Unexpected Sensor Reset	All	Non-latching	ECC & mV: main loop x2; Optima & Excel: 2 seconds	Note 2. Optima or Excel: Sensor fault or warning code (Note 4)	If repeated, check supply voltage, check cable loop impedance, check terminal connections
F103	XNX Temperature Error	All	Non-latching	2 seconds	XNX temperature (Celsius)	Check location for heat sources. Fit with sunshade or other protection. Change the transmitter's location. Check temperature in Info->Transmitter Status to ensure temperature is being measured properly.
F104	XNX 24 VDC Supply Bad	All	Non-latching	2 seconds	XNX supply voltage x1000	Check the wire of the 24V power supply to the transmitter and the power supply operation.
F105	3.3VDC Supply Bad on XNX, personality board, or option board	All	Non-latching	2 seconds	1=XNX, 2=Personality board, 3=Option board	Check Transmitter Status
F106	XNX Real Time Clock Failure	All	Non-latching	2 seconds	Total seconds since Jan 1, 1970	Either clock was incorrectly set or the battery for the clock has failed. Note: the clock will stop running on January 1, 2036.
F107	XNX Internal Failure (RAM, ROM, EEPROM, Opcode)	All	Non-latching except for EEPROM error	At power up and 8 hours	Note 3	Contact Honeywell Analytics' Service Department.
F108	XNX mA Output Loop Failure	All	Latching	2 seconds	mA output error (measured mA - set mA)	Check wiring of mA output from XNX. Check that switches S1 and S2 are set correctly. Note that if F108 is not resolved quickly, an F149 (Internal Communication Failure - mA) will also be generated. When the cause of F108 is resolved, both the F108 and F149 will be cleared.
F109	Simulated Warning/Fault	All	Non-latching	Enabled by user	0	Performing an alarm/fault reset will clear all simulation.
F110	Sensor software mismatch	Optima	Latching	Only checked at power up	Sensor firmware version x10	Contact Honeywell Analytics' Service Department.
F111	Negative Drift	ECC, mV	Non-latching	2 seconds	Raw gas concentration of sensor	Check sensor location for external interference. Perform zero calibration. If problem persists after zero calibration and no interference exists, replace sensor.
	Negative Drift; may indicate a failed IR sensor	Optima, Excel	Non-latching	XNX polls sensor every 2 seconds, diagnostic frequency controlled by sensor	Sensor fault or warning code	Check sensor location for external interference. Perform zero calibration. If problem persists after zero calibration and no interference exists, replace sensor.

Fault	Description	Appli-cable Sensors	Latching / Non-Latching	Frequency of Diagnostic	Event History Data	Action For Resolution
F112	Sensor 24 VDC Supply Bad	Optima, Excel	Non-latching	XNX polls sensor every 2 seconds, diagnostic frequency controlled by sensor	Sensor fault or warning code (Note 4)	Check the wire of the 24V power supply to the transmitter and the power supply operation. Also check the wiring between the transmitter and the Optima/Excel.
F113	Sensor Internal 5V Power Supply Defect	Excel	Non-latching	XNX polls sensor every 2 seconds, diagnostic frequency controlled by sensor	Sensor fault or warning code (Note 4)	Remove and return to Honeywell for repair.
F114	Sensor Internal Lamp Issue	Optima	Latching	XNX polls sensor every 2 seconds, diagnostic frequency controlled by sensor	Sensor fault or warning code (Note 4)	Remove and return to Honeywell for repair.
F116	Sensor Internal Failure	Optima, Excel	Non-latching	XNX polls sensor every 2 seconds, diagnostic frequency controlled by sensor	Sensor fault or warning code (Note 4)	Remove and return to Honeywell for repair.
F117	Sensor Loop Failure, (Sensor is losing/has lost mA output signal. These are detected by Optima and Excel, F161 is detected by XNX and will usually occur before F117.)	Optima, Excel	Latching	XNX polls sensor every 2 seconds, diagnostic frequency controlled by sensor	Sensor fault or warning code (Note 4)	Check that supply voltage is stable. Check wiring between Optima/Excel and the transmitter. Check loop impedance of wiring. Check that switches S3 and S4 are set correctly. If the switch settings need to be changed, power down the transmitter before changing the switch settings. Once the problem has been resolved, a Soft Reset must be performed for the Calibration menu to clear F117.
F118	Sensor Real Time Clock issue	Excel	Non-latching	XNX polls sensor every 2 seconds, diagnostic controlled by sensor	Sensor fault or warning code (Note 4)	Reset “date and time” in Excel, recycle Excel power, and confirm “date and time. If not retained, remove and return to Honeywell for repair.

Fault	Description	Applicable Sensors	Latching / Non-Latching	Frequency of Diagnostic	Event History Data	Action For Resolution
F119	Cartridge Internal Electrical Failure	ECC, mV	Non-latching	XNX polls sensor every 2 seconds, diagnostic frequency controlled by sensor	Note 5	Check cartridge connections, check sensor operation, fit replacement cartridge, replace personality board.
F120	No Sensor	ECC, mV, Optima, Excel	Non-latching	2 seconds	Note 2	Indicates a loss of communication with the sensor. Check that the sensor type indicated in the part number matches the installed hardware. Check the wiring between ECC sensors or Optima/Excel and the transmitter.
F121	Wrong Cartridge, error loading sensor parameters	All	Non-latching	At power up and when cartridge is changed	0	Contact Honeywell Analytics' Service Department.
F122	General Diagnostics	Optima, Excel	Non-latching	XNX polls sensor every 2 seconds, diagnostic frequency controlled by sensor	Sensor fault or warning code (Note 4)	Check sensor connections, check sensor operation, fit replacement sensor, replace personalty board.
F123	Sensor Temperature Error	Optima	Non-latching		Sensor fault or warning code (Note 4)	Check location for heat sources. Fit with sunshade or other protection. Change location of the transmitter. Check temperature in Info->Sensor Status to ensure temperature is being measured properly.
	Sensor Temperature Error	Excel	Non-latching	XNX polls sensor every 2 seconds, diagnostic frequency controlled by sensor	Sensor fault or warning code (Note 4)	Check location for heat sources. Fit with sunshade or other protection. Change location of the transmitter. Check temperature in Info->Sensor Status to ensure temperature is being measured properly.
	Sensor Temperature Error	ECC	Non-latching	2 seconds	Sensor temperature (Celsius)	Check location for heat sources. Fit with sunshade or other protection. Change location of XNX. Check temperature in Info->Sensor Status to ensure temperature is being measured properly.
F125	Calibration Required	All	Non-latching	2 seconds	Number of days remaining until calibration expires, negative = number of days expired	Time since the last span calibration has exceeded a defined limit. Performing a successful span calibration will clear the condition. The limit is the maximum calibration interval.

Fault	Description	Applicable Sensors	Latching / Non-Latching	Frequency of Diagnostic	Event History Data	Action For Resolution
F126	Sensor Path Obscured	Optima	Non-latching	XNX polls sensor every 2 seconds, diagnostic frequency controlled by sensor	Sensor fault or warning code (Note 4)	Check location for external interference. Check sensor for dirty windows.
F127	Beam Block	Excel	Non-latching	XNX polls sensor every 2 seconds, diagnostic frequency controlled by sensor	Sensor fault or warning code (Note 4)	Check location for external interference or obstructions in the IR path. Check sensor for dirty windows. Check Excel alignment.
F128	Sensor Installation Not Complete	Excel	Non-latching	XNX polls sensor every 2 seconds, diagnostic frequency controlled by sensor	Sensor fault or warning code (Note 4)	Check Excel alignment. Perform a zero calibration.
F130	Option Communication Failure	All	Non-latching	2 seconds	Option module ID: 0=None, 1=Foundation™ Fieldbus, 2=Modbus®, 3=Relay	Check that installed option matches the option indicated in the transmitter part number. If the option has been changed, the new option must be set up in Information->Transmitter Data as described in the manual.
F133	Not used					
F143	Stabilization Timeout	All	Latching	2 seconds	Warm up time (seconds x100)	Cycle power, contact Honeywell Analytics' Service Department if problem persists.
F145	Reflex Failure	ECC	Non-latching	Dependent on sensor, typically 8 hours; Once fault is detected: every 15 minutes	nA/mV	ECC sensor is no longer functioning properly. Replace sensor.
F146	Unknown Sensor Failure	Optima, Excel	Non-latching	2 seconds	Sensor fault or warning code (Note 4)	Contact Honeywell Analytics' Service Department.
F148	Internal option board hardware failure	All	Non-latching	2 seconds	Option board error status (Note 6)	Contact Honeywell Analytics' Service Department.

Fault	Description	Appli-cable Sensors	Latching / Non-Latching	Frequency of Diagnostic	Event History Data	Action For Resolution
F149	Internal 4-20 mA monitoring circuit communication failure	All	Non-latching	3.366 seconds	0	Contact Honeywell Analytics' Service Department.
F150	mA Output Monitor Communications Watchdog Error	All	Non-latching	138 us	Communication error count	Contact Honeywell Analytics' Service Department.
F151	Sensor Module Type Changed	ECC	Non-latching	2 seconds	Module type: 0=None, 1=ECC, 2=mV, 3=Excel, 4=Optima, 5=Generic mA	For ECC: Perform Accept New Sensor function, if problem persists contact Honeywell Analytics' Service Department. For others, contact Honeywell Analytics' Service Department.
F152	Option Module Configuration Error	All	Latching	Only at powerup or every 125 ms when no option board detected	Option module ID: 0=None, 1=Founda-tion Fieldbus, 2=Mod-bus, 3=Relay	Confirm option properly installed, reconfigure unit.
F153	Signal/Data mis-match error on IR personality	Optima, Excel	Non-latching	2 seconds	Digital sensor reading	Check wiring to Optima/Excel. In particular, check the white wire be-tween XnX and Optima/Excel. Note: power must be cycled to reset F153 after correcting the cause.
F154	mA Input Diagnos-tic Failure	Optima, Excel	Latching	5 minutes after power up and then every 8 hours	Input mA	Contact Honeywell Analytics' Service Department.
F155	Generic mA Sensor Type Error	Generic mA	Non-latching	2 seconds	Input mA	Indicates that mA input from sensor is less than 3 mA. Check wiring between XNX and sensor. Also check the switches S3 and S4 are set correctly. If the switch settings need to be change, power down the transmitter before changing the switch settings. If wiring and switches are okay, replace sensor.
F156	mV Current Control Failure	mV	Non-latching	Main loop x16	constant current A/D input mV	Check that correct mV sensor type is selected. Check wiring between XNX and sensor. If sensor type and wiring are okay, replace sensor.
F157	Sensor Drift Fault	ECC, mV	Non-latching	2 seconds	Current baseline	Perform zero calibration. If problem persists, replace sensor.
F158	Sensor/Personal-ity Part Number mismatch	All	Non-latching	"ECC & mV: main loop x2; Optima & Excel: 2 seconds"	Entire personality part #	Check that installed option matches the option indicated in the transmit-ter part number, check wiring to Optima/Excel.

Fault	Description	Appli-cable Sensors	Latching / Non-Latching	Frequency of Diagnostic	Event History Data	Action For Resolution
F159	Option Part Num-ber Mismatch	All	Non-latching	Only at powerup or every 125 ms when no option board detected	Entire option part #	Check that installed option matches the option indicated in the XNX part number, check wiring to Optima/Excel.
F160	Hardware Diagnos-tic Failure	ECC, mV	Non-latching	Main loop x2	Gain1 high byte, Gain2 low byte	Replace defective EC cartridge or mV personality board.
F161	mA Input Indicates Fault	Optima, Excel	Non-latching	1 second	Input mA	Indicates mA input from Optima/Excel is below 1 mA, indicating a fault in the sensor. Any other fault will also trigger this fault, so check for addi-tional faults in event history to determine specific issue. If no other faults indicated, check wiring between Optima/Excel and XNX. Also check that switches S3 and S4 are set correctly.
F162	Error reloading safety critical RAM block	All	Non-latching	2 seconds	Note 3	Contact Honeywell Analytics' Service Department.
F163	Interrupt integrity fault	All	Non-latching	Main loop	Note 3	XNX will reset if more than 600,000 successive errors occur.
F164	mV Sensor failure	mV	Latching	1 second	mV bridge voltage or bridge current that caused fault	Indicates that the sensor was changed or is bad. If the fault will not clear, replace the sensor.

Fault	Description	Appli-cable Sensors	Latching / Non-Latching	Frequency of Diagnostic	Event History Data	Action For Resolution
F165	mA Calibration failure	all	Latching	2 seconds	DAC: Digital to Analog Converter (4-20 mA output) ADC: Analog to Digital Converter (4-20 mA internal feedback) 0 OK 1 DAC 4 mA point is too low 2 DAC 4 mA point is too high 4 DAC 20 mA point is too low 8 DAC 20 mA point is too high 16 ADC 4 mA point is too low 32 ADC 4 mA point is too high 64 ADC 20 mA point is too low 128 ADC 20 mA point is too high	Indicates that 4-20 mA calibration failed and discarded. Events history parameter indicates which calibration point has failed. If 4-20 mA calibration fails with F165, no changes take place so the 4-20 mA calibration output stays as it was. Check 4-20 mA loop resistance. Repeat 4-20 mA calibration. The fault clears itself after a successful 4-20 mA calibration.

Notes

Note 2:

Spi Event Bits	
Decimal	**Description**
1	SPI1 Starting TX
2	SPI1 transmitting
4	falling clock edge, 0 = rising edge
8	SPI1 port open, 0 = closed
16	SPI1 no response
32	SPI1 ECC no response
64	SPI1 missing data
128	Not used
256	SPI3 Starting TX
512	SPI3 transmitting
1024	falling clock edge, 0 = rising edge
2048	SPI3 port open, 0 = closed
4096	Not used
8192	
16384	
32768	SPI2 Starting TX

Note 3:

Subtypes	Decimal	Description
Fault 2 Event Bits	1	CRC error in safety critical RAM block
	2	Error reloading safety critical RAM block from EEPROM
	4	Error loading data from Personality board
	8	Excel signal level has been below the low signal level threshold for at least 24 hours
	16	Excel beam blocked
	32	Personality board error code > 0
	64	Option board error code > 0
	128	IR mA input > 1 mA and < 3.4 mA
	256	IR mA input < 1.0 mA
	512	IR forced 10 mA not within +/-1 mA
	1024	gains from PGA don't match local copy
	2048	error reading or writing EEPROM
	4096	ECC reflex failure
	8192	RAM test failure
	16384	Program memory CRC failure
	32768	Op code test failure
Fault 3 Event Bits	1	Interrupt integrity test failure

Note 4:

Optima and Excel fault and warning codes are displayed in the Event History data field.

Note 5:

Subtypes	Decimal	Description
ECC Fault Subtypes	1	I2C error reading or writing EEPROM
	2	GALPAT RAM test failure
	4	Program memory CRC failure
	8	Opcode test failure
	16	Can’t adjust PGA or EEPROM value doesn't match digital pot
	32	Reserved
	64	Reserved
	128	GALPAT RAM test failure in common area
mV Fault Subtypes	1	I2C error reading or writing EEPROM
	2	GALPAT RAM test failure
	4	Program memory CRC failure
	8	Opcode test failure
	16	Can’t adjust PGA or EEPROM value doesn't match digital pot
	32	RAM safety variable failure
	64	Interrupts integrity failure
	128	Stack overflow/underflow failure

Note 6:

Relay Option Board Error Status		
	Decimal	Description
Relay Option Board Error Status	1	Didn't receive STX or ETX
	2	Received undefined command
	4	Exceeded maximum data bytes
	8	Write collision or buffer overrun
	16	CRC error in SPI packet
	32	Stack overflow or underflow
	64	Program memory CRC error
	128	Galpat RAM test failure

Informational Messages

Number	Description	Contents of Data Field
I001	Unused	
I002	Force Relay Mode Started	Bitpattern for relays. (E.G. 7.0 ==All)
I003	Force Relay Mode Ended.	N/A
I004	Force mA Mode Started	Force current. (E.G. 20.0)
I005	Force mA Mode Ended	N/A
I006	Short-Term Inhibit Started	N/A
I007	Short-Term Inhibit Ended	N/A
I008	Long-Term Inhibit Started	N/A
I009	Long-Term Inhibit Ended	N/A
I010	mA Output Recalibrated	N/A
I011	Bump Test Started	N/A
I012	Bump Test Timed Out	N/A
I013	Bump Test Completed Concentration < AI1	Peak concentration observed
I014	Bump Test Completed AI1 < Concentration < AI2	Peak concentration observed
I015	Bump Test Completed. AI2 < Concentration	Peak concentration observed
I016	Zero Calibration Successful	N/A
I017	Zero Calibration Failed	Error code
I018	Calibrate Span Successful 1 of 2	Percent change in span factor from previous
I019	Calibrate Span Successful 2 of 2	Absolute span factor
I020	Calibrate Span Failed	Error code
I021	Calibrate Span Timeout	N/A
I022	Password Changed	1,2 or 3 (access level)
I023	Performing Soft Reset	N/A
I024	Alarms Configured Latching	N/A
I025	Alarms Configured Non-Latching	N/A
I026	Alarm Relays Configured Normally Energized	N/A

Number	Description	Contents of Data Field
I027	Alarm Relays Configured Normally De-Energized.	N/A
I028	Fieldbus Address Changed	New address (e.g. 15)
I029	Fieldbus Speed Changed	New speed (e.g. 19200)
I030	Sensor Type Changed	iCurrentCalGlobalID
I031	Gas Selection Changed	iCurrentCalGlobalID
I032	Time For Beam Block Fault Changed	iBlockFltTime
I033	Time For Fault Detection Changed	iOtherFltTime
I034	Level For Low Signal Fault Changed	fLowSignalLevel
I035	Invalid Path Length Written	fPathLen
I036	Path Length Changed	fPathLen
I037	mA for Inhibit Changed	f_mA_Flt_Step[0]
I038	mA for Warning Changed	f_mA_Flt_Step[1]
I039	mA for Overrange Changed	f_mA_Flt_Step[2]
I040	mA for Fault Changed	f_mA_Flt_Step[3]
I041	mA for Low Signal Changed	f_mA_Flt_Step[4]
I042	mA for Blocked Beam Changed	f_mA_Flt_Step[5]
I043	Concentration for mA Full Scale Changed	fDisplayRange
I044	Instrument Id Changed	N/A
I045	Measuring Units Changed	iMeasurementUnits
I046	Alarm 1 Reconfigured for Increasing Concentrations	N/A
I047	Alarm 1 Reconfigured for Depleting Concentrations	N/A
I048	Alarm 2 Reconfigured for Increasing Concentrations	N/A
I049	Alarm 2 Reconfigured for Depleting Concentrations	N/A
I050	Alarm 1 Value Changed	fAlarmThres[0]
I051	Alarm 2 Value Changed	fAlarmThres[1]
I052	Clock Set	N/A

Number	Description	Contents of Data Field
I053	Date Format Changed	iDateFormat
I054	Sensor Boots	N/A
I055	Unused	
I056	Sensor RTC Adjusted	Error in seconds or +/-999 if large
I057	Fault Set Latching	
I058	Fault Set Non-Latching	
I059	LCD Heater On	
I060	LCD Heater Off	
I061	Personality Power Up	Sensor type
I062	Option Power Up	Option type
I063	Loaded Same Cell	
I064	Loaded Changed Cell	
I065	Loaded Changed Gas	
I066	Option Type Changed	
I067	HART® Address Changed	
I068	HART Mode Changed	
I069	Excel alignment started	
I070	Excel alignment completed	

Specifications

Product Specifications

Electrical			
Operating Voltage	EC/mV: 16V to 32V (24V nominal) ** Startup/Normal values ** IR: 18V to 32V (24V nominal) ** Startup/Normal values **		
Power Consumption	**Configuration**	**Max Power**	**Inrush**
	XNX EC	6.2 w	<1A, <10ms@24VDC
	XNX mV	6.5 w	<750mA <2ms@24VDC
	XNX IR (Optima)	9.7w	<1A, <10ms@24VDC
	XNX IR (Excel)	13.2w	<1A, <10ms@24VDC
Termination	Crimp style pluggable with retaining screws, 12-28 AWG (2.5 to 0.5mm^2) with Shorting Jumpers: 14-28 AWG (2.0 to 0.5mm^2) **NOTE:** To maintain EMC integrity, wiring must be shielded by either an integral shield or run through conduit or pipe. Shield must provide 90% coverage.		
Signal	Standard	HART over 3-wire 4-20 mA (sink, source, or isolated)	
	Optional	Modbus over RS-485	
	20 mA	HART over 3-wire 4-20mA (sink, source, or isolated) compliant with NAMUR NE43	
Cable Ports	5 – (2 right, 2 left, 1 bottom) Available in ¾" NPT, or M25		
Recommended Cable	See the Distance Considerations for Installation section.		
Unpowered battery life	(Real Time Clock) 3 years at rated storage temperature		
Construction			
Material	Marine grade aluminum alloy or SS316. 5-coat painted finish.		
Dimensions	159 x 197 x 113.8 mm / 6.138 x 7.75 x 4.48 inches		
Weight	2.27 kg (5 lb) Aluminum 5 kg (11 lb) Stainless		

Mounting	
XNX® Enclosure	Integral Mounting Lugs for Wall- or Optional Pipe-Mount, Optional Wall/ Ceiling Bracket
User Interface	
Standard	Custom Backlit LCD, magnetic wand operation of local user interface
Optional	HART Handheld with IS Port
Environmental - Transmitter Operating	
Enclosure IP Rating**	IP66
Temperature*	Transmitter: -40°C to +65°C (-40°F to +149°F)
	MPD**-CB1: -40°C to +65°C (-40°F to +149°F)
	MPD**-I**: -20°C to +50°C (-4°F to +122°F)
Humidity	0 to 99% RH non-condensing
Pressure	80 kPa to 110 kPa
Air Speed	0-6 m/sec

*Operating temperatures will be limited by the sensors. See EC Sensor Performance Data, Factory Mutual Verified; EC Sensor Performance Data, Dekra Testing and Certification; and Other EC Sensors for more information.
**IP rating relates to enclosure only. Gas detection performance may be impaired during and immediately after exposure to deluge.

Environmental - Transmitter Storage	
Temperature	-40°C to +65°C / -40°F to +149°F
Humidity	0 to 99% RH non-condensing

Hazardous Area Approvals (See Certifications by Part Number Series for other [pending] approvals)
XNX-UT**-***** UL and CSA Listed (see notes below) Class I, Div. 1 Group A, B, C & D; Class I, Zone 1 Group IIC UL Listed Class II, Div. 1 Groups F & G, Class II, Zone 20 & 21 FM Approvals Listed AEx db IIC T6 Gb -40 ºC ≤Tamb ≤65 ºC AEx db [ia] IIC T6 Gb -40 ºC ≤Tamb ≤65 ºC (XNX UT*E-***** & XNX-UT*-*H****) XNX-AM**-***** UL/Demko 09 ATEX 0809943X / UL21UKEX2033X / IECEx UL 09.0010X II 2 G Ex db IIC T6…T4 Gb II 2 (1) G Ex db [ia IIC Ga] IIC T6…T4 Gb II 2 (1) D Ex tb [ia IIIC Ga] IIIC T85°C Db II 2 D Ex tb IIIC T85°C Db IP66, -40°C ≤ Tamb ≤+65°C XNX-BT**-***** UL Listed Class I, Div. 1 Groups A, B, C & D Class I, Zone 1 Groups IIC Class II, Div. 1 Groups F & G, Class II, Zone 20 & 21 INMETRO DNV 18.0166X Ex db IIC T6…T4 Gb Ex db [ia Ga] IIC T6…T4 Gb Ex tb [ia Da] IIIC T85°C Db Ex tb IIIC T85°C Db IP66, -40°C ≤ Tamb ≤ +65°C FM Approvals Listed AEx db IIC T6 Gb -40 ºC ≤Tamb ≤65 ºC AEx db [ia] IIC T6 Gb -40 º≤ Tamb ≤65 ºC (XNX BT*E-***** & XNX-BT*-*H****) NOTES: 1. The temperature class (T6) is limited to T4 when the MPD sensor is attached locally to the transmitter. 2. XNX EC cartridges and Remote Mount Kit have been evaluated by Underwriters Laboratories (UL) to Canadian National Standards. 3. CSA Listing is only to Class I, Division 1 does not include Class II, Div.1 approval 4. Peer to peer and multi-drop network (daisy chained) HART, Modbus®, and FOUNDATION™ Fieldbus configurations have not been evaluated by CSA to the requirements of CSA 22:2 No. 152 for Combustible Gas Detection and may be used only for diagnostics and data collection. 5. Refer to the control drawing 1226E0402 for the detail Explosion-proof specification.
Performance Approvals
See Certifications by Part Number Series for other approvals

Communication Options	
Relays	Type: 3 form "C" SPCO contacts for alarm and fault indication. Rating: 250 VAC, 5A/24 VDC, 5A (2 Alarm, 1 Fault) A remote reset is provided to silence alarms. (The FOUNDATION Fieldbus, relay, and Modbus options are mutually exclusive.)
Modbus	Modbus/RTU over RS-485 physical layer. Interface isolated; includes switchable 120 Ohm termination resistor. Baud rates: 1200 to 38,400; 19,200 default. (The FOUNDATION Fieldbus, relay, and Modbus options are mutually exclusive.)
FOUNDATION Fieldbus	H1 Physical Layer. 31.25 kbit/s Manchester encoded signal. AMIS-49200 Fieldbus MAU (media access unit). SPC4-2 Fieldbus Controller. The FOUNDATION Fieldbus, relay, and Modbus options are mutually exclusive.

SENSOR DATA

Operating and Storage Conditions for Performance Tested EC Cartridges

Gas		Cartridge Part Number	Operating Pressure	Operating Air Speed	Warm-up Time (minimum)	Storage Conditions*			
						Temperature	Pressure	Humidity	Time**
O_2	Oxygen	XNXXSO1SS XNXXSO1FM	80 kPa ~ 120 kPa	0 ~ 6 m/sec	60 sec.	0 to 20°C, 32 to 68°F	80 to 120 KPa	5 to 95% RH	6 months
H_2S	Hydrogen Sulfide	XNXXSH1SS XNXXSH1FM	80 kPa ~ 120 kPa	0 ~ 6 m/sec	60 sec.	0 to 20°C, 32 to 68°F	70 to 110 KPa	30 to 70% RH	6 months
H_2S (High)	Hydrogen Sulfide	XNXXSH2SS	80 kPa ~ 120 kPa	0 ~ 6 m/sec	60 sec.	0 to 20°C, 32 to 68°F	70 to 110 KPa	30 to 70% RH	6 months
CO	Carbon Monoxide	XNXXSC1SS XNXXSC1FM	80 kPa ~ 120 kPa	0 ~ 6 m/sec	60 sec.	0 to 20°C, 32 to 68°F	70 to 110 KPa	30 to 70% RH	6 months

*Store in sealed packages **Check cartridge certificates

Detectable Gases and Performance

Gas detection performance is dependent upon temperature and humidity. The data in this table is based on 68°F (20°C) and 50% relative humidity. Response times are longer when operating in colder temperatures.

Gas	Selectable Full Scale Range	Default Range	Steps	Selectable Cal Gas Range	Default Cal Point	Response Time (T90) secs	Accuracy (ppm or % of applied gas)	Drift over time	Operating Temperature[1]	
									Min	Max
Oxygen	25.0% / Vol only	25.0% Vol	n/a	20.9%/Vol(Fixed)	20.9% / Vol	15	+/-0.5% O2	<4% / yr	-40°F (-40°C)	131°F (55°C)
Hydrogen Sulfide	10.0 to 50.0 ppm	15.0 ppm	0.1 ppm	30 to 70% of selected full scale range	10 ppm	30	+/-0.3 or +/-20%	<0.5 ppm/yr	-40°F (-40°C)	131°F (55°C)
Hydrogen Sulfide	50 to 500 ppm	100 ppm	10 ppm		50 ppm	30	+/-2 or +/-20%	<0.5 ppm/yr	-4°F (-20°C)	131°F (55°C)
Carbon Monoxide	100 to 1,000 ppm	300 ppm	100 ppm		100 ppm	30	+/-2 or +/-20%	<2 ppm/yr	-40°F (-40°C)	131°F (55°C)
Sulfur Dioxide	5.0 to 20.0 ppm	15.0 ppm	5.0 ppm		5.0 ppm	40	+/-0.3 or +/-20%	<2% / mo	-40°F (-40°C)	131°F (55°C)
Ammonia	50 to 200 ppm	200 ppm	50 ppm		100 ppm	180	+/-10 or +/-20%	<5% / 6 mo	-4°F (-20°C)	122°F (50°C)[2]
Ammonia	200 to 1,000 ppm	1,000 ppm	50 ppm		300 ppm	180	+/-15 or +/-20%	<5% / 6 mo	-4°F (-20°C)	104°F (40°C)
Chlorine	5.0 to 20.0 ppm	5.0 ppm	5.0 ppm		2.0 ppm	90	+/-0.3 or +/-20%	<2 ppm / yr	14°F (-10°C)	131°F (55°C)
Chlorine Dioxide	1.00 ppm only	1.00 ppm	n/a		0.5 ppm	120	+/-30%	<5% / yr	-4°F (-20°C)	131°F (55°C)
Nitric Oxide	100 ppm only	100 ppm	n/a		50 ppm	50	+/-3 or +/-20%	<2% / mo	-4°F (-20°C)	131°F (55°C)
Nitrogen Dioxide	5.0 to 50.0 ppm	10 ppm	5.0 ppm		5 ppm	60	+/-3 or +/-20%	<2% / mo	-4°F (-20°C)	131°F (55°C)
Hydrogen	1,000 ppm only	1,000 ppm	n/a		500 ppm	90	+/-10 or +/-25%	<2% / mo	-4°F (-20°C)	131°F (55°C)
Hydrogen	9,999 ppm only	9,999 ppm	n/a		5000 ppm	90	+/-25 or +/-30%	<10% / 6 mo	-4°F (-20°C)	131°F (55°C)
Hydrogen Chloride	10.0 to 20.0 ppm	10 ppm	1.0 ppm		5.0 ppm	180	+/-3 or +/-20%	<20% / yr	-4°F (-20°C)	104°F (40°C)
Hydrogen Fluoride	10.0 to 12.0 ppm	12.0 ppm	0.1 ppm		5.0 ppm	300	+/-30%	<20% / yr	-4°F (-20°C)	131°F (55°C)
Phosphine	1.2 ppm only	1.2 ppm	n/a		0.5 ppm	33	+/-0.03 or +/-20%	<10% / yr	-4°F (-20°C)	131°F (55°C)
Hydrogen cyanide	30.0 ppm only	30.0 ppm	n/a		10.0 ppm	<200	<±0.4 ppm	<2% / mo	-4°F (-20°C)	131°F (55°C)
Fluorine	4 ppm only	4.00 ppm	n/a		2.0 ppm	<30	<±0.03 ppm	<2 ppm / yr	-4°F (-20°C)	131°F (55°C)
Ozone	0.400 ppm only	0.400 ppm	n/a		0.200 ppm	<60[3]	<±0.003 ppm	<5% / mo	-4°F (-20°C)	131°F (55°C)
EtO	20.0 to 50.0 ppm	25.0 ppm	5.0 ppm		10.0 ppm	<125[3]	<±0.3 ppm	< 5% / yr	-4°F (-20°C)	131°F (55°C)

1 When operating in Hazardous Area applications the detector must not be operated outside the certified temperature range. See Certification details for UL and ATEX/UKEX/IECEx certified temperature ranges.
2 +131F/+55C intermittent
3 Data from temperature test

EC Sensor Performance Data, Factory Mutual Verified

(see Certifications by Part Number Series)

Gas		Cartridge Part Number	Selectable Full Scale Range (Display and 4-20mA Full Scale)	Default Range	Range Increments	Lower Alarm Limit	Lower Detection Limit	Lower Explosive Limit (% Vol)	Zero Deviation	Selectable Cal Gas Range	Default Cal Point	Response Time T50 (sec)	Response Time T90 (sec)	Accuracy	Operating Temperature		Operating Humidity		EC Sensor Expected LIfe (months)
															Min	Max	Min	Max	
O_2	Oxygen	XNXXSO1FM	n/a	23.0% Vol	n/a	5.0%Vol	5% Vol	n/a	n/a	20.9 %Vol (fixed)	20.9 %Vol	T20 <10	<30	<+/-0.5 %Vol	-30°C / -34°F	55°C /131°F	15% RH	90% RH	24
H_2S	Hydrogen Sulfide	XNXXSH1FM	10.0 to 50.0 ppm	15.0 ppm	0.1 ppm	5.0 ppm	1.5 ppm	n/a	-2.5 ppm	30 to 70% of the selected full scale range	10 ppm	<20	<30	2 ppm or 10% of reading, whichever is greater	-40°C / -40°F	55°C / 131°F	15% RH	90% RH	12
CO	Carbon Monoxide	XNXXSC1FM[1]	100 to 1000 ppm	300 ppm	100 ppm	30 ppm	15 ppm	na/	-25 ppm		100 ppm	<15	<30	See footnote 1	-40°C / -40°F	55°C / 131°F	15% RH	90% RH	TBD

Footnotes:

1. XNXXSC1FM accuracy over temperature <±10% of reading 20°C/68°F to 55°C/131°F, <±20% of reading 20°C/68°F to -10°C/14°F, <±30% of reading -10°C/14F to -20°C/-4°F. Recalibration is recommended if the temperature of the local environment has varied by more than -30°C.

Notes:

- Performance figures are measured by test units calibrated at 50% of full scale, at ambient conditions of 20°C, 50% RH, with the EC Weather Housing attached
- IP rating of FM Cartridges is IP63.
- Barometric pressure effects on the O_2 sensor: The output from the O_2 sensor has pressure effects of <0.1% change of output per % change in pressure. When the barometric pressure changes by ±20% the output from the O_2 sensor changes <±0.4%Vol. However, the oxygen sensor shows transient behavior when subjected to a rapid change in ambient pressure due to either weather or altitude. For example, a 10KPa instantaneous positive pressure step change may cause an overscale alarm condition for a period of about 12 seconds.
- Operating the EC sensor at extended temperature ranges for a prolonged time period exceeding 12 hours my cause deterioration in the sensor performance and shorten sensor life. Extended temperature range for XNX EC sensors is -40°C to -20°C.
- Response times may increase at lower temperatures.
- FM performance verification is limited to the requirements of the standards identified in Table 6.3 for each cartridge.
- Contact Honeywell Analytics for additional data or details.

EC Sensor Performance Data, Dekra Testing and Certification

(see Certifications by Part Number Series)

Gas		Cartridge Part Number	Selectable Full Scale Range (Display and 4-20mA Full Scale)	Default Range	Range Increments	Lower Alarm Limit	Lower Detection Limit	Zero Variation	Default Set Alarm		Selectable Cal Gas Range	Default Cal Point	Response Time (T50) (sec)	T90 Response T10 Recovery Time (sec)	Accuracy[1]	Operating Temperature		Operating Humidity		EC Sensor Expected LIfe (months)
									Lev. 1	Lev. 2						Min	Max	Min	Max	
O_2	Oxygen	XNXXSO1SS	n/a	25.0 %Vol	n/a	5.0%Vol	3.5 %Vol	n/a	23.5	19.5	20.9 %Vol (fixed)	20.9 %Vol	T20 <10	<30	<+/-0.6 %Vol	-30°C / -34°F	55°C /131°F	15% RH	90% RH	24
H_2S	Hydrogen Sulfide	XNXXSH1SS	10.0 to 50.0 ppm	15.0 ppm	0.1ppm	3.0 ppm	1.0 ppm	2.0 ppm	5	10	30 to 70% of the selected full scale range	10 ppm	<20	<30	<+/-0.3 ppm	-40°C / -40°F	55°C / 131°F	15% RH	90% RH	12
H_2S (High)	Hydrogen Sulfide	XNXXSH2SS	50 to 500 ppm	100 ppm	10 ppm	5 ppm	1 ppm	2 ppm	20	50		50 ppm	<20	<30	<+/-5 ppm	-40°C / -40°F	55°C / 131°F	15% RH	90% RH	12
CO	Carbon Monoxide	XNXXSC1SS	100 to 500 ppm	300 ppm	100 ppm	15 ppm	5 ppm	10 ppm	100	200		100 ppm	<15	<30	<+/-2 ppm	-40°C / -40°F	55°C / 131°F	15% RH	90% RH	24

Footnote:

1. Accuracy of reading at default Alarm 1 concentration (typically 10% FS or defined minimum alarm level setting, whichever is greater) when operated at default full scale.

Notes:

- Sensor drift between LDL and negative drift fault limits (typcially > negative zero variation) appear as 0 on the display and outputs of the device.
- Long-term drift: XNXXSC1SS <5%/year, XNXXSO1SS <4%/year, XNXXSH1SS and XNXXSH2SS <2%/month.
- Performance figures are measured by test units calibrated at 50% of full scale, at ambient conditions of 20°C, 50% RH, with the EC Weather Housing attached.
- Operating the EC sensor at extended temperature ranges for a prolonged time period exceeding 12 hours may cause deterioration in sensor performance and shorten sensor life. Extended temperature ranges for XNX EC sensor cartridges are -40°C to -20°C.
- Barometric pressure effects on the O_2 sensor: The output from the O_2 sensor has pressure effects of <0.1% change of output per % change in pressure. When the barometric pressure changes by ±20%, the output from the O_2 sensor changes <±0.4%Vol. However, the oxygen sensor shows transient behavior when subjected to a rapid change in ambient pressure due to either weather or altitude. For example, a 10KPa instantaneous positive pressure step change may cause an overscale alarm condition for a period of about 12 seconds.
- Response times may increase at lower temperatures.
- Contact Honeywell Analytics for any additional data or details.

Other EC Sensors

Gas		Cartridge Part Number	Selectable Full Scale Range (Display and 4-20mA Full Scale)	Default Range	Range Incre-ments	Lower Alarm Limit	Lower Detection Limit	Zero Deviation	Selectable Cal Gas Range	Default Cal Point	Response Time T50 (sec)	Response Time T90 (sec)	Accuracy[1]	Typical Accuracy @ Lowest Alarm Level	Operating Temperature		Operating Humidity		EC Sensor Expected LIfe (months)
															Min	Max	Min	Max	
HCl	Hydrogen chloride	XNXXSR1SS	10.0 to 20.0 ppm	10.0 ppm	1.0 ppm	2.0 ppm	0.6 ppm	-1.0 ppm	30 to 70% of the selected full scale range	5.0 ppm	<45[2, 3]	<150[2, 3]	<+/-1.0 ppm or 20% of applied gas[2, 3]	<+/-1.0 @ 3 ppm	-20°C/-4°F	40°C/104°F	15% RH	90% RH	12
H_2S (Low)	Hydrogen sulfide	XNXXSH3SS	n/a	15.0 ppm	n/a	3.0 ppm	1.0 ppm	-2.5 ppm		10 ppm	<20	<40	<+/-0.3 ppm	<+/-0.3 @ 3 ppm	-40°C / -40°F	55°C / 131°F	15% RH	90% RH	12
SO_2	Sulfur dioxide	XNXXSS1SS	5.0 to 20.0 ppm	15.0 ppm	5.0 ppm	2.0 ppm	0.6 ppm	-1.0 ppm		5.0 ppm	<15	<30	<+/-0.3 ppm	<+/-0.3 @ 2 ppm	-40°C / -40°F	55°C / 131°F	15% RH	90% RH	24
SO_2 (High)	Sulfur dioxide	XNXXSS2SS	20.0 to 50.0 ppm	50.0 ppm	10.0 ppm	5.0 ppm	1.5 ppm	-2.5 ppm		25 ppm	<15	<30	<+/-0.6 ppm	<+/-0.6 @ 5 ppm	-40°C / -40°F	55°C / 131°F	15% RH	90% RH	24
NH_3	Ammonia	XNXXSA1SS	50 to 200 ppm	200 ppm	50 ppm	20 ppm	6 ppm	-10 ppm		100 ppm	<60	<180	<+/-4 ppm	<+/-4 @ 20 ppm	-20°C / -4°F	40°C / 104°F	15% RH	90% RH	12
NH_3 (High)	Ammonia	XNXXSA2SS	200 to 1000 ppm	1,000 ppm	50 ppm	100 ppm	30 ppm	-50 ppm		300 ppm	<60	<180	<+/-20 ppm	<+/-20 @ 100 ppm	-20°C / -4°F	40°C / 104°F	15% RH	90% RH	12
Cl_2[2]	Chlorine	XNXXSL2SS	n/a	5.00 ppm	n/a	0.50 ppm	0.15 ppm	-0.25 ppm		2.0 ppm	<20	<60	<+/-0.2 ppm	<+/-0.20 @ 0.50 ppm	-10°C / 14°F	55°C / 131°F	15% RH	90% RH	24
Cl_2 (High)[2]	Chlorine	XNXXSL1SS	5.0 to 20.0 ppm	5.0 ppm	5.0 ppm	1.0 ppm	0.6 ppm	-1.0 ppm		2.0 ppm	<20	<30	<+/-0.2 ppm	<+/-0.2 @ 1 ppm	-10°C / 14°F	55°C / 131°F	15% RH	90% RH	24
ClO_2[2]	Chlorine dioxide	XNXXSX1SS	n/a	1.00 ppm	n/a	0.10 ppm	0.03 ppm	-0.05 ppm		0.5 ppm	<30	<120	<+/-30%	<+/-0.03 @ 0.1 ppm	-20°C / -4°F	55°C / 131°F	15% RH	90% RH	24
NO	Nitrogen monoxide	XNXXSM1SS	n/a	100 ppm	n/a	10 ppm	3 ppm	-5 ppm		50 ppm	<15	<30	<+/-2 ppm	<+/-2.0 @ 10 ppm	-20°C / -4°F	55°C / 131°F	15% RH	90% RH	24
NO_2	Nitrogen dioxide	XNXXSN1SS	5.0 to 50.0 ppm	10.0 ppm	5.0 ppm	5.0 ppm	0.5 ppm	-2.5 ppm		5 ppm	<15	<30	<+/-0.2 ppm	<+/-0.2 @ 5 ppm	-20°C / -4°F	55°C / 131°F	15% RH	90% RH	24
H_2	Hydrogen	XNXXSG1SS	n/a	1,000 ppm	n/a	100 ppm	30 ppm	-50 ppm		500 ppm	<60	<90[2]	<+/-8 ppm	<+/-8 @ 100 ppm	-20°C / -4°F	55°C / 131°F	15% RH	90% RH	24
H_2 (High)	Hydrogen	XNXXSG2SS	n/a	10,000 ppm	n/a	1000 ppm	300 ppm	-500 ppm		5000 ppm	<15	<30	<+/-150 ppm	<+/-150 @ 1000 ppm	-20°C / -4°F	55°C / 131°F	15% RH	90% RH	24
HF[2]	Hydrogen fluoride	XNXXSF1SS	10.0 to 12.0 ppm	12.0 ppm	0.1 ppm	1.5 ppm	0.4 ppm	-0.6 ppm		5.0 ppm	120	<240	<+/-0.5 ppm	<+/-0.5 @ 1.5 ppm	-20°C / -4°F	55°C / 131°F	20% RH	75% RH	12
PH_3	Phosphine	XNXXSP1SS	n/a	1.20 ppm	n/a	0.15 ppm	0.04 ppm	-0.06 ppm		0.5ppm	<15	<30	<+/- 0.02 ppm	<+/-0.02 @ 0.15 ppm	-20°C / -4°F	40°C / 104°F	10% RH	90% RH	24
HCN	Hydrogen cyanide	XNXXSY1SS	n/a	30.0 ppm	n/a	2.4 ppm	1.0 ppm	-2.5 ppm		10.0 ppm	<35	<200	<±0.4 ppm	0.4 ppm	-20°C / -4°F	55°C / 131°F	15% RH	90% RH	24
F_2	Fluorine	XNXXSU1SS	n/a	4.00 ppm	n/a	0.50 ppm	0.36 ppm	-0.72 ppm		2.0 ppm	<5	<30	<±0.03 ppm	0.3 ppm	-20°C / -4°F	55°C / 131°F	15% RH	90% RH	18
O_3	Ozone	XNXXSZ1SS	n/a	0.400 ppm	n/a	0.048 ppm	0.032 ppm	-0.080 ppm		0.200 ppm	<15[4]	<60[4]	<±0.003 ppm	0.003 ppm[5]	-20°C / -4°F	55°C / 131°F	15% RH	90% RH	18
EtO	Ethylene oxide	XNXXSE1SS	20.0 to 50.0 ppm	25.0 ppm	5.0 ppm	3.0 ppm	1.0 ppm	-2.5 ppm		10.0 ppm	<40[4]	<125[4]	<±0.3 ppm	0.3 ppm[5]	-20°C / -4°F	55°C / 131°F	15% RH	90% RH	24

See footnotes and notes on the following page.

Footnotes (see table on previous page):

1. Accuracy of reading at default Alarm 1 concentration (typically 10%FS or defined minimum alarm level setting, whichever greater) when operated at default full scale.
2. System conditioning may be required to achieve stated results. Contact Honeywell Analytics for details.
3. Measured using calibration flow housing at calibration flow rate (300-375 ml/min) with dry gas.
4. Data from temperature test.
5. Data from LDL or linearity test.

Notes (see table on previous page):

- Data taken at ambient conditions of 20°C, 50% RH.
- Data represents typical values of freshly calibrated sensors without optional accessories attached.
- Performance figures are measured by test units calibrated at 50% of full scale.
- Standard temperature range for EC Sensors is -20°C to +55°C; ATEX, UKEX, IECEx.
- Extended temperature ranges for the EC Sensors are -40°C to -20°C
- Extended operating conditions for H2S sensors XNXXSH1SS, XNXXSH2SS and XNXXSH3SS are +65°C and/or to 95% RH. This condition is not covered by the performance approvals for this product.
- Accuracy between the temperatures of -40°C and -20°C is ±30% at the applied gas concentration.
- Operating the EC Sensors at extended temperature ranges for a prolonged time period exceeding 12 hours may cause deterioration in sensor performance and shorter sensor life.
- Barometric pressure effects on the O_2 sensor: The output from the O_2 sensor has pressure effects of <0.1% change of output per % change in pressure. When the barometric pressure changes by ±20% the output from the O_2 sensor changes <±0.4%Vol. However, the oxygen sensor shows transient behavior when subjected to a rapid change in ambient pressure due to either weather or altitude. For example, a 10KPa instantaneous positive pressure step change may cause an overscale alarm condition for a period of about 12 seconds.
- Recalibration is recommended if the temperature of local environment has varied by more than ±15°C from the temperature of calibration.
- Response times may increase at lower temperatures.
- The storage time for H2S sensors XNXXSH1SS, XNXXSH2SS and XNXXSH3SS can be extended to 12 months when held under environmental conditions of -10°C to +30°C and 20% to 80% RH. This condition is not covered by the performance approvals for this product.
- Contact Honeywell Analytics for any additional data or details.

EC Sensor Cross-sensitivity

Gas type	Part Number	Gas Type Applied	Concentration	Unit	Reading	Unit
O_2	XNXXS01SS XNXXS01FM	Carbon Dioxide	5	%vol	0.1	%vol (change O_2 reading) per %vol CO_2
HCl	XNXXSR1SS	Carbon monoxide	2000	ppm	0	ppm HCl
		Hydrogen	20000		0	
		Chlorine	5		5.6	
		Nitrogen dioxide	5		0.9	
		Propan-2-ol	500		0	
		Methanol	500		0	
		Hydrogen fluoride	5		6.7	
		Hydrogen suflfide	25		-3.6	
		Sulphur dioxide	50		22.4	
		Arsine	1		0	
		Phosphine	1		-0.14	
		Diborane	1		-1.3	
H_2S (Low Range)	XNXXSH3SS	Ammonia	50	ppm	0	ppm H_2S
		Carbon Monoxide	100		<2	ppm H_2S
		Carbon Dioxide	5000		0	ppm H_2S
		Chlorine	0.5		0	ppm H_2S
		Ethylene	100		0	ppm H_2S
		Hydrogen	100		0	ppm H_2S
		Hydrogen Sulfide	10		10	ppm H_2S
		Nitrogen Monoxide	25		0	ppm H_2S
		Nitrogen Dioxide	3		0	ppm H_2S
		Sulfur Dioxide	2		0	ppm H_2S

Gas type	Part Number	Gas Type Applied	Concentration	Unit	Reading	Unit
H_2S	XNXXSH1SS XNXXSH1FM	Ammonia	50	ppm	0	ppm H_2S
		Carbon Monoxide	100		<2	ppm H_2S
		Carbon Dioxide	5000		0	ppm H_2S
		Chlorine	0.5		0	ppm H_2S
		Ethylene	100		0	ppm H_2S
		Hydrogen	100		0	ppm H_2S
		Hydrogen Sulfide	10		10	ppm H_2S
		Nitrogen Monoxide	25		0	ppm H_2S
		Nitrogen Dioxide	3		0	ppm H_2S
		Sulfur Dioxide	2		0	ppm H_2S
H_2S (High Range)	XNXXSH2SS	Ammonia	50	ppm	0	ppm H_2S
		Carbon Monoxide	100		<2	ppm H_2S
		Carbon Dioxide	5000		0	ppm H_2S
		Chlorine	0.5		0	ppm H_2S
		Ethylene	100		0	ppm H_2S
		Hydrogen	100		0	ppm H_2S
		Hydrogen Sulfide	10		10	ppm H_2S
		Nitrogen Monoxide	25		0	ppm H_2S
		Nitrogen Dioxide	3		0	ppm H_2S
		Sulfur Dioxide	2		0	ppm H_2S

Gas type	Part Number	Gas Type Applied	Concentration	Unit	Reading	Unit
CO	XNXXSC1SS XNXXSC1FM	Acetone	1000	ppm	0	ppm CO
		Acetylene	40		80	ppm CO
		Ammonia	100		0	ppm CO
		Carbon Monoxide	100		100	ppm CO
		Chlorine	2		0	ppm CO
		Ethanol	2000		3	ppm CO
		Ethylene	100		85	ppm CO
		Hydrogen	100		20	ppm CO
		Hydrogen Sulfide	25		0	ppm CO
		Iso-Propanol	200		0	ppm CO
		Nitrogen Monoxide	50		8	ppm CO
		Nitrogen Dioxide	800		20	ppm CO
		Sulfur Dioxide	50		0.5	ppm CO
SO_2	XNXXSS1SS	Carbon Monoxide	300	ppm	<3	ppm SO_2
		Hydrogen Sulfide	15		0	ppm SO_2
		Nitrogen Monoxide	35		0	ppm SO_2
		Nitrogen Dioxide	5		~-5	ppm SO_2
SO_2	XNXXSS2SS	Carbon Monoxide	300	ppm	<3	ppm SO_2
		Hydrogen Sulfide	15		0	ppm SO_2
		Nitrogen Monoxide	35		0	ppm SO_2
		Nitrogen Dioxide	5		~-5	ppm SO_2
NH_3	XNXXSA1SS	Alcohols	1000	ppm	0	ppm NH_3
		Carbon Dioxide	5000		0	ppm NH_3
		Carbon Monoxide	100		0	ppm NH_3
		Hydrocarbons		% range	0	ppm NH_3
		Hydrogen	10000	ppm	0	ppm NH_3
		Hydrogen Sulfide	20		2	ppm NH_3

Gas type	Part Number	Gas Type Applied	Concentration	Unit	Reading	Unit
NH_3 (High Range)	XNXXSA2SS	Alcohols	1000	ppm	0	ppm NH_3
		Carbon Monoxide	100		0	ppm NH_3
		Chlorine	5		0	ppm NH_3
		Nitrogen Dioxide	10		0	ppm NH_3
		Sulfur Dioxide	20		-40	ppm NH_3
		Hydrogen	3000		0	ppm NH_3
		Hydrogen Sulfide	20		20	ppm NH_3
Cl_2	XNXXSL2SS	Carbon Dioxide	20000	ppm	0	ppm Cl_2
		Hydrogen Chloride	9		1.25	ppm Cl_2
		Hydrogen Sulfide	25		-16.3	ppm Cl_2
		Nitrogen Dioxide	50		1.25 (transient)	ppm Cl_2
		Sulfur Dioxide	50		9.1	ppm Cl_2
Cl_2 (High Range)	XNXXSL1SS	Carbon Dioxide	20000	ppm	0	ppm Cl_2
		Hydrogen Chloride	9		1.25	ppm Cl_2
		Hydrogen Sulfide	25		-16.3	ppm Cl_2
		Nitrogen Dioxide	50		1.25 (transient)	ppm Cl_2
		Sulfur Dioxide	50		9.1	ppm Cl_2
ClO_2	XNXXSX1SS	Refer To Cl2	Refer to Cl_2	Refer to Cl_2	Refer to Cl_2	Refer to Cl_2
NO	XNXXSM1SS	Carbon Monoxide	300	ppm	0	ppm NO
		Sulfur Dioxide	5		0	ppm NO
		Nitrogen Dioxide	5		<1.5	ppm NO
		Hydrogen Sulfide	15		~1.5	ppm NO
NO_2	XNXXSN1SS	Carbon Monoxide	300	ppm	0	ppm NO_2
		Hydrogen Sulfide	15		~ -1.2	ppm NO_2
		Sulfur Dioxide	5		0	ppm NO_2
		Nitrogen Monoxide	35		0	ppm NO_2
		Chlorine	1		~1	ppm NO_2

Gas type	Part Number	Gas Type Applied	Concentration	Unit	Reading	Unit
H_2	XNXXSG1SS	Carbon Monoxide	300	ppm	≤ 60	ppm H_2
		Hydrogen Sulfide	15		<3	ppm H_2
		Sulfur Dioxide	5		0	ppm H_2
		Nitrogen Monoxide	35		»10	ppm H_2
		Nitrogen Dioxide	5		0	ppm H_2
		Chlorine	1		0	ppm H_2
		Hydrogen Cyanide	10		»3	ppm H_2
		Hydrogen Chloride	5		0	ppm H_2
		Ethylene	100		»80	ppm H_2
H_2 (High Range)	XNXXSG2SS	Ammonia	100	ppm	0	ppm H_2
		Arsine	0.2	ppm	0	ppm H_2
		Carbon Dioxide	1000	ppm	0	ppm H_2
		Carbon Monoxide	100	ppm	150	ppm H_2
		Chlorine	1	ppm	0	ppm H_2
		Ethylene	500	ppm	yes; n/d	ppm H_2
		Hydrogen Cyanide	20	ppm	0	ppm H_2
		Hydrogen Sulfide	20	ppm	4	ppm H_2
		Iso-Propanol	1100	ppm	yes; n/d	ppm H_2
		Methane	1	%	0	ppm H_2
		Nitrogen Dioxide	10	ppm	-40	ppm H_2
		Ozone	0.25	ppm	0	ppm H_2
		Sulfur Dioxide	5	ppm	0	ppm H_2

Gas type	Part Number	Gas Type Applied	Concentration	Unit	Reading	Unit
HF	XNXXSF1SS	Carbon Monoxide	2000	ppm	0	ppm HF
		Hydrogen	20000	ppm	0	ppm HF
		Chlorine	5	ppm	5.8	ppm HF
		Nitrogen Dioxide	5	ppm	0.65	ppm HF
		Iso-Propanol	500	ppm	0	ppm HF
		Methanol	500	ppm	0	ppm HF
		Hydrogen Fluoride	5	ppm	5	ppm HF
		Hydrogen Sulfide	25	ppm	-3.6	ppm HF
		Sulfur Dioxide	50	ppm	28.3	ppm HF
		Arsine	1	ppm	0	ppm HF
		Phosphine	1	ppm	-0.14	ppm HF
		Diborane	1	ppm	-1.3	ppm HF
PH_3	XNXXSP1SS	Carbon Monoxide	2000	ppm	<10	ppm PH_3
		Hydrogen	5000	ppm	<10	ppm PH_3
		Chlorine	1	ppm	-70	ppm PH_3
		Nitrogen Dioxide	8	ppm	-860	ppm PH_3
		Ethanol	2000	ppm	<10	ppm PH_3
		Iso-Propanol	1000	ppm	<10	ppm PH_3
		Hydrogen Chloride	10	ppm	<10	ppm PH_3
		Hydrogen Fluoride	10	ppm	<10	ppm PH_3
		Hydrogen Sulfide	0.5	ppm	70	ppm PH_3
		Ammonia	100	ppm	1050 (transient)	ppm PH_3
		Sulfur Dioxide	50	ppm	550 (transient)	ppm PH_3
		Silane	1	ppm	364	ppm PH_3
		Arsine	1	ppm	680	ppm PH_3
		Diborane	1	ppm	454	ppm PH_3
		Germane	1	ppm	454	ppm PH_3

Gas Type	Part Number	Gas Type Applied	Concentration	Unit	Reading	Unit
HCN	XNXXSY1SS	Carbon Monoxide	300	ppm	<15	ppm HCN
		Hydrogen Sulfide	15	ppm	~90	ppm HCN
		Sulphur Dioxide	20	ppm	40 < x$ < 75	ppm HCN
		Nitric Oxide	35	ppm	-28 < x$ < 0	ppm HCN
		Nitrogen Dioxide	5	ppm	-20 < x$ < -10	ppm HCN
		Ethylene	100	ppm	<25	ppm HCN
F_2	XNXXSU1SS	Carbon Dioxide	20000	ppm	0	ppm F_2
		Hydrogen Chloride	9	ppm	1.25	ppm F_2
		Hydrogen Sulfide	25	ppm	-16.3	ppm F_2
		Nitrogen Dioxide	50	ppm	1.25 (transient)	ppm F_2
		Sulphur Dioxide	50	ppm	9.1	ppm F_2
EtO	XNXXSE1SS	Ethanol	-	-	~55	% of EtO
		Toluene	-	-	~20	% of EtO
		Methyl-ethyl-ketone	-	-	~10	% of EtO
		Carbon Monoxide	-	-	~40	% of EtO
O_3	XNXXSZ1SS	Bromine, Iodine	-	-	yes; n/d	ppm O_3
		Carbon Dioxide	5000	ppm	0	ppm O_3
		Carbon Monoxide	100	ppm	0	ppm O_3
		Chlorine	1	ppm	1.2	ppm O_3
		Chlorine Dioxide	1	ppm	1.5	ppm O_3
		Hydrazine	3	ppm	-3	ppm O_3
		Hydrogen	3000	ppm	0	ppm O_3
		Hydrogen Sulfide	20	ppm	-1.6 [1)]	ppm O_3
		Nitrogen	100	%	0	ppm O_3
		Nitrogen Dioxide	10	ppm	6	ppm O_3

Notes

- The figures of cross-sensitivity are typical values and art not to be used as a basis for cross-calibration.
- Do not scale cross-sensitivities (they may not be linear).
- For some cross-interferents breakthrough may occur if gas is applied a longer time period.
- There are many gases and vapors that can poison electrochemical cells. It is difficult to give a complete and exclusive list of all species which will have an effect on the sensors. However, these are some common substances which must be avoided:
- Airborne greases - These may block gas access into the sensors and therefore reduce sensitivity.
- Silicone compounds - These are often found in sprays, aerosols, lubricants, polishes, adhesives, sealants, zebra strip, cleaning agents, and floor waxes. These compounds tend to reduce the sensitivity of the sensors and generally will have a permanent effect.
- Solvents and organic vapors - Many organic vapors will damage the sensors. Some common ones are IPA, toluene, xylene, other benzene derivatives, petrol, and diesel. It is difficult to give a full list of organic vapors, as there are so many of them. Generally, any organic vapor must be avoided.

MPD Sensor Performance Data

Sensor Type	Gas	Typical Response Time (T50) sec	Typical Response Time (T90) sec	Maximum Range	Accuracy (% of full scale or % of applied gas)	Selectable Cal Gas Range	Drift Over Time	Operating Humidity	Operating Temperature		Operating Pressure	Operating Air Speed
									Min	Max		
MPD-IC1	Carbon Dioxide	<30	<70	5.00 %Vol	±5%FS or ±15%	30 to 70% of the selected full scale range	< 3%/yr	0-95% RH non-condensing	-20°C / -4°F	+50°C / 122°F	80kPa ~ 110kPa	0 ~ 6m/sec
MPD-IV1	Methane	<15	<30	5.00 %Vol	±5%FS or ±15%		< 3%/yr		-20°C / -4°F	+50°C / 122°F	80kPa ~ 110kPa	0 ~ 6m/sec
MPD-IF1	Propane	<30	<45	100 %LEL	±5%FS or ±15%		< 3%/yr		-20°C / -4°F	+50°C / 122°F	80kPa ~ 110kPa	0 ~ 6m/sec
MPDAM-CB1	Methane	≤8	≤46	100 %LEL	±1.5 %LEL	25 to 95% of the selected full scale range	< 3%/yr		-40°C / -40°F	+65°C / 149°F	80kPa ~ 110kPa	0 ~ 6m/sec
	Propane	≤10	≤34		±5%FS or ±15%							
	Hydrogen	≤10	≤77									
	Butane-2	≤22	≤65									
	Nonane	≤41	≤201									

Notes

- Response times may vary depending upon molecular weight, size, and structure.
- CSA approved hydrogen sensors are MPDUT-CB1 and 705 STD.
- Dekra Testing and Certification approved sensors are MPDAM CB1, Sensepoint HT and Sensepoint PPM (10%L)
- Data taken at 20-25°C. Contact Honeywell Analytics for additional data or details.
- Response times may increase at lower temperatures.
- Data represents typical values without optional accessories attached.
- System conditioning may be required to achieve stated results. Contact Honeywell Analytics for details.
- Performance figures are valid with test gases between humidities between 20 and 90% RH.
- Performance figures are measured using a sample humidity of 50% RH.
- Performance figures are measured between 40 and 60% of full scale.
- Performance figures are measured by test units calibrated at 50% of full scale.
- Use of the weatherproof cap will increase response times.
- FM 6340 performance approval based on MPD-IC1 with SPXCDWP T50<60 T90<150.
- Sensitivities may change due to aging or poisoning of the sensor.
- Refer to MPD Operating Manual for figures relating to sensitivities to other gases.
- Warm-up time of MPD is 10 min.
- Quoted response time data was performed in diffusion mode.
- MPD has been tested with the gases stated in the table above (MPD Sensor Performance Data), but will respond to other gases. Contact Honeywell Anayltics for information on sensitivities to other gases.

EN60079-29-1 Performance Approved Gases for mV Sensor Types

Sensor Type	EN60079-29-1 Reference	Verified Gas Selections						
		Hydrogen	Methane-2	Propane-2	Butane-2	Star 2	Star 4	FLM
MPD AMCB1	Standard Test Gas		●	●				
	Other Gases	●			●	n-nonane		
Sensepoint-HT	Standard Test Gas		●	●				
	Other Gases	●			●		n-nonane	
Sensepoint-PPM (10%L)		10% LEL						Methane, Ethylene, i-Butylene
Max Zero Deviation (see note 1)		-7% LEL				-9% LEL	-7% LEL	
LDL (see note 2)		3% LEL				5% LEL	3% LEL	

Notes

1. When the deadband is enabled, readings < 0% LEL are not displayed or indicated on the 20 mA output. Values exceeding the zero deviation limit will result in F111 faults.
2. Readings < LDL are shown as 0% on the display and 20 mA output.
3. Sensitivities may change due to aging or poisoning of the sensor.
4. Sensepoint PPM gas measuring range: 0 – 10 % LEL methane, ethylene, n-butane and i-butylene

Other Sensor Performance Data

Performance data for other supported sensors is available in their respective technical manuals.

Certifications by Part Number Series

Contact Honeywell Analytics for information about XNX® Universal Transmitter approvals not shown in this section.

XNX Certifications XNX-UT Series																						
XNX Part Number Series			XNX Transmitter IR Personality			XNX Transmitter mV Personality								XNX Transmitter EC Personality					Options			
			XNX-UTSI-***** XNX-UTAI-*****			XNX-UTSV-***** / XNX-UTAV-*****								XNX-UTSE-***** / XNX-UTAE-*****								
			With Generic 20 mA Input	With Optima Plus	With Searchline Excel	MPD-UTCB1 (Cat Bead)	MPD-UTIV1 (IR Methane)	MPD-UTIF1 (IR Flam)	MPD-UTIC1 (IR CO_2)	with 705	with Sensepoint	with Sensepoint PPM	with Sensepoint HT	With XNXXSO1FM O_2 Cartrdige	With XNXXSH1FM H_2S Cartridge	With XNXXSC1FM CO Cartridge	SO_2, NH_3, Cl_2, ClO_2, NO, NO_2, H_2 PPM, HCL, HF, PH_3	HCN, F_2, O_3, EtO	Modbus®	Relays	Local HART®	FOUNDATION™ Fieldbus
UL Listed For Hazardous Locations		UL 1203	T	T	T	T	T	T	T	T	N/A	N/A	N/A	T	T	T	T	T	T	T	T	T
		UL 913-7th Edition	N/A	N/A	N/A	N/A	N/A	N/A	N/A	N/A	N/A	N/A	N/A	T	T	T	T	T	N/A	N/A	T	N/A
		ISA 60079-29-1	N/A	T	N/A	T	N/A	N/A	N/A	N/A	N/A	N/A	N/A	N/A	N/A	N/A	N/A	N/A	N/A	N/A	N/A	N/A
CSA	Hazardous Location	CAN/CSA C22.2 No. 30 M-1986	T	T	T	T	N/A	N/A	T	T	N/A	N/A	N/A	T	T	T	T	T	T	T	T	N/A
		CAN/CSA C22.2 No. 157-92 (Applies to Local HART Option and/or EC Adaptors)	N/A	N/A	N/A	N/A	N/A	N/A	N/A	N/A	N/A	N/A	N/A	T	T	T	T	T	N/A	N/A	T	N/A
	Performance	CSA C22.2 No. 152	N/A	T	N/A	T	N/A	N/A	N/A	T	N/A	N/A	N/A	N/A	N/A	N/A	N/A	N/A	T	T	T	T
FM Listed	US Toxic Performance	Standard referenced in notes 1, 2, 3	N/A	N/A	N/A	N/A	N/A	N/A	3	N/A	N/A	N/A	N/A	1	2	3	N/A	N/A	T	T	T	T
	Flammable Performance	FM 6310 / 6320	N/A	T	N/A	T	N/A	N/A	N/A	T	N/A	N/A	N/A	N/A	N/A	N/A	N/A	N/A	T	T	T	T
		FM 6325	N/A	N/A	T	N/A	N/A	N/A	N/A	N/A	N/A	N/A	N/A	N/A	N/A	N/A	N/A	N/A	T	T	T	T
	Toxic Gas Detector	FM 6340	N/A	N/A	N/A	N/A	N/A	N/A	T	N/A	N/A	N/A	N/A	N/A	N/A	N/A	N/A	N/A	T	T	T	T
T = 3/4 NPT threaded Transmitters & Adapters **N/A = Not Applicable**		**1. ANSI/ISA 92.04.01, Part 1 2007** **2. ISA 92.0.01, Part 3 1998** **3. FM 6340**																				

Notes

Special notes for ISA 60079-29-1:2016 approval:

- This approval covers XNX in combination with Searchpoint Optima Plus and MPD catalytic sensors only.
- This approval allows direct fitment of the Searchpoint Optima Plus or MPD catalytic sensors to the XNX with a load 250 ohm minimum resistance. This approval does not cover the remote-mounting of the sensor from the XNX.
- XNX shall be installed such that the MPD sensor faces downwards. When using the Searchpoint Optima Plus sensor this must be mounted so that the sensor is horizontal.
- For the ISA 60079-29-1 assessment, only the 4 to 20 mA output is considered as the safety function. None of the other outputs of the XNX are considered as the safety function during this assessment.
- For the compliance to this approval, the adjustable alarm set point shall not exceed 60 %LEL and the highest alarm shall be configured as a latching alarm.

XNX Certifications by XNX-AM Series

XNX Part Number Series		XNX Transmitter IR Personality			XNX Transmitter mV Personality								XNX Transmitter EC Personality							Options			
		XNX-AMSI-***** XNX-AMAI-*****			XNX-AMSV-***** / XNX-AMAV-*****								XNX-AMSE-***** / XNX-AMAE-*****										
		With Generic 20 mA Input	With Optima Plus	With Searchline Excel	MPD-AMCB1 (Cat Bead)	MPD-AMIV1 (IR Methane)	MPD-AMIF1 (IR Flam)	MPD-AMIC1 (IR CO_2)	With 705 HT	With Sensepoint	With Sensepoint PPM	With Sensepoint HT	With Oxygen Cartrdige	With H_2S Low Cartridge	With H_2S Med Cartridge	With H_2S High Cartridge	With CO Cartridge	SO_2, NH_3, Cl_2, ClO_2, NO, NO_2, H_2 PPM HCL, HCN, HF, O_3, PH_3	HCN, F_2, O_3, EtO	Modbus	Relays	Local HART	FOUNDATION Fieldbus
Electromagnetic & Safety; CE Mark EMC Compliance	EMC Directive 2014/30/EU	M	M	M	M	M	M	M	M	M	M	M	M	M	M	M	M	M	M	M	M	M	M
	EN 50270:2015	B	B	B	B	B	B	B	B	B	B	B	B	B	B	B	B	B	B	B	B	B	B
	ATEX Directive 2014/34/EU	M	M	M	M	M	M	M	M	M	M	M	M	M	M	M	M	M	M	M	M	M	M
	UKEX Regulation 2016 No. 1107	M	M	M	M	M	M	M	M	M	M	M	M	M	M	M	M	M	M	M	M	M	M
Hazardous Location --- ATEX/DEMKO UKEX/IECEx	EN IEC 60079-0:2018	M	M	M	M	M	M	M	N/A	M	M	M	M	M	M	M	M	M	M	M	M	M	M
	EN 60079-1:2014	M	M	M	M	M	M	M	N/A	M	M	M	M	M	M	M	M	M	M	M	M	M	M
	EN 60079-11:2012	N/A	N/A	N/A	N/A	N/A	N/A	N/A	N/A	N/A	N/A	N/A	M	M	M	M	M	M	M	N/A	N/A	M	N/A
	IEC 60079-31 2nd Ed	M	M	M	M	M	M	M	N/A	N/A	N/A	M	M	M	M	M	M	M	M	M	M	M	M
	IEC 60079-0 7th Ed	M	M	M	M	M	M	M	N/A	M	M	M	M	M	M	M	M	M	M	M	M	M	M
	IEC 60079-1 6th Ed	M	M	M	M	M	M	M	N/A	M	M	M	M	M	M	M	M	M	M	M	M	M	M
	EN 60079-11:2012	N/A	N/A	N/A	N/A	N/A	N/A	N/A	N/A	N/A	N/A	N/A	M	M	M	M	M	M	M	N/A	N/A	M	M
	EN 60079-31:2014	M	M	M	M	M	M	M	N/A	N/A	N/A	M	M	M	M	M	M	M	M	M	M	M	M

B = Both 3/4 NPT and M25
M = M25 threaded Transmitters & Adapters
M_1 = When used with S3KRMK in a Zone 0 location
N/A = Not Applicable

XNX Certifications XNX-AM Series

XNX Part Number Series		XNX Transmitter IR Personality			XNX Transmitter mV Personality								XNX Transmitter EC Personality						Options			
		XNX-AMSI-***** XNX-AMAI-*****			XNX-AMSV-***** / XNX-AMAV-*****								XNX-AMSE-***** / XNX-AMAE-*****									
		With Generic 20 mA Input	With Optima Plus	With Searchline Excel	MPD-AMCB1 (Cat Bead)*	MPD-AMIV1 (IR Methane)	MPD-AMIF1 (IR Flam)	MPD-AMIC1 (IR CO_2)	With 705 HT	With Sensepoint	With Sensepoint PPM	With Sensepoint HT*	With XNXXSO1SS O_2 Cartridge	With XNXXSH1SS H_2S Cartridge	With XNXXSH2SS H_2S Cartridge	With XNXXSC1SS CO Cartridge	SO_2, NH_3, Cl_2, ClO_2, NO, NO_2, H_2, PPM HCL, HCN, HF, O_3, PH_3	HCN, F_2, O_3, EtO	Modbus	Relays	Local HART	FOUNDATION Fieldbus
Performance* DTC BVS 10 ATEX/UKEX G001X PFG 10 G 002X + supplements	EN 60079-29-1:2016***	N/A	M	N/A	M	N/A	N/A	N/A	N/A	N/A	M	M	N/A	N/A	N/A	N/A	N/A	N/A	N/A	M	M	N/A
	EN 45544-1:2015, EN 45544-3:2015	N/A	N/A	N/A	N/A	N/A	N/A	N/A	N/A	N/A	N/A	N/A	N/A	M	M	M	N/A	N/A	N/A	M	M	N/A
	EN 50104:2010**	N/A	N/A	N/A	N/A	N/A	N/A	N/A	N/A	N/A	N/A	N/A	M	N/A	N/A	N/A	N/A	N/A	N/A	M	M	N/A
	EN 50271:2018	N/A	M	N/A	M	N/A	N/A	N/A	N/A	N/A	M	M	M	M	M	M	N/A	N/A	N/A	M	M	N/A
TÜV Rhineland	IEC61508****	B	B	B	B	B	B	B	B	B	B	B	B	B	B	B	B	B	N/A	N/A	N/A	N/A
	EN 50402****	B	B	B	B	B	B	B	B	B	B	B	B	B	B	B	B	B	N/A	N/A	N/A	N/A

Delays resulting from transmission errors between sensor and transmitter extend response times T90 by more than one-third. The period until fault indication is 10 seconds.
M = M25 threaded Transmitters & Adapters
B = Both XNX-UT**-***** 3/4"NPT and XNX-AM**-***** transmitters
N/A = Not Applicable
* Tested components: handheld in point-to-point mode, calibration mask, weatherproof cap (not used for calibration)

** Tested applications: oxygen deficiency and oxygen enrichment

*** Tested gases:
1) with MPDAM-CB1 (Cat Bead) - primary gases: methane and propane (0-100% LEL). Other gases: hydrogen (CAS no. 1333-74-0), n-butane (CAS No. 106-97-8) and n-nonane FLM (CAS no. 111-84-2)
2) with Sensepoint HT - primary gases: methane and propane (0-100% LEL). Other gases: hydrogen (CAS no. 1333-74-0), n-butane (CAS no. 106-97-8) and n-nonane FLM (CAS no. 111-84-2)
3) with Sensepoint PPM - primary gases: methane and ethylene (0-10% LEL). Other gases: n-butane (CAS no. 106-97-8) and i-butylene (CAS no. 115-11-7)
4) with Optima Plus - flammable gases listed in the EU-type examination certificate of Optima Plus (0-100% LEL)

**** Refer to XNX transmitter safety manual (1998-0808) for detail information about functional safety

XNX Certifications - MPD-BT**.***** Part Number Series

XNX Part Number Series		XNX Transmitter IR Personality			XNX Transmitter mV Personality					XNX Transmitter EC Personality					Options			
		XNX-BTSI-***** XNX-BTAI-*****			XNX-BTSV-***** XNX-BTAV-*****					XNX-BTSE-***** XNX-BTAE-*****								
		With Generic 20 mA Input	With Optima Plus	With Searchline Excel	MPD-BTCB1 (Cat Bead)	MPD-BTIV1 (IR Methane)	MPD-BTIF1 (IR Flam)	MPD-BTIC1 (IR CO2)	with 705 HT	With XNXXSO1FM O_2 Cartrdige	With XNXXSH1FM H_2S Cartridge	With XNXXSC1FM CO Cartridge	SO_2, NH_3, CL_2, ClO_2, NO, NO_2, H_2 PPM HCL, HCN, HF, O_3, PH_3	HCN, F_2, O_3, EtO	Modbus	Relays	Local HART	FOUNDATION Field Bus
UL Listed	UL 1203	T	T	T	T	T	T	T	T	T	T	T	T	T	T	T	T	T
	UL 913-7th Edition Applies to Local HART Option)	N/A	N/A	N/A	N/A	N/A	N/A	N/A	N/A	T	T	T	T	T	N/A	N/A	T	N/A
INMETRO TÜV Rheinland	ABNT NBR IEC 60079-0:2013	B	B	B	B	B	B	B	B	B	B	B	B	B	B	B	B	B
	ABNT NBR IEC 60079-1:2016	B	B	B	B	B	B	B	B	B	B	B	B	B	B	B	B	B
	ABNT NBR IEC 60079-11:2013	N/A	N/A	N/A	N/A	N/A	N/A	N/A	N/A	B	B	B	B	B	N/A	N/A	B	N/A
	ABNT NBR IEC 60079-31:2014	B	B	B	B	B	B	B	B	B	B	B	B	B	B	B	B	B
FM Listed	Standard referenced in notes 1, 2, 3	N/A	N/A	N/A	N/A	N/A	N/A	3	N/A	1	2	3	N/A	N/A	T	T	T	T
	FM 6310 / 6320	N/A	T	N/A	T	N/A	N/A	N/A	T	N/A	N/A	N/A	N/A	N/A	T	T	T	T
	FM 6325	N/A	N/A	T	N/A	N/A	N/A	N/A	N/A	N/A	N/A	N/A	N/A	N/A	T	T	T	T
	FM 6340	N/A	N/A	N/A	N/A	N/A	N/A	T	N/A	N/A	N/A	N/A	N/A	N/A	T	T	T	T

T = 3/4 NPT threaded Transmitters & Adapters
N/A = Not Applicable
B = Both 3/4” NPT and M25”

1. ANSI/ISA 92.04.01, Part 1 2007
2. ISA 92.0.01, Part 3 1998
3. FM 6340

Certification Labels

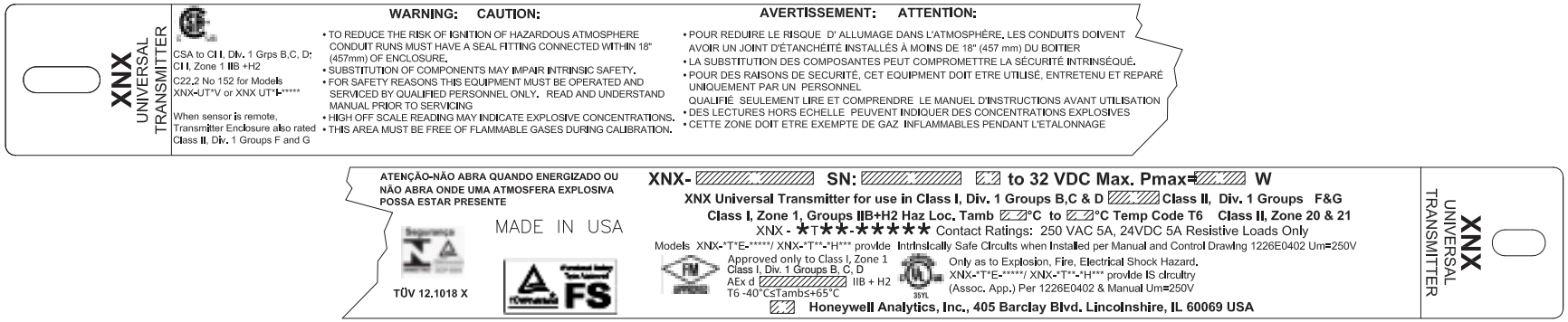

Figure 229. XNX-UT**-***** configuration

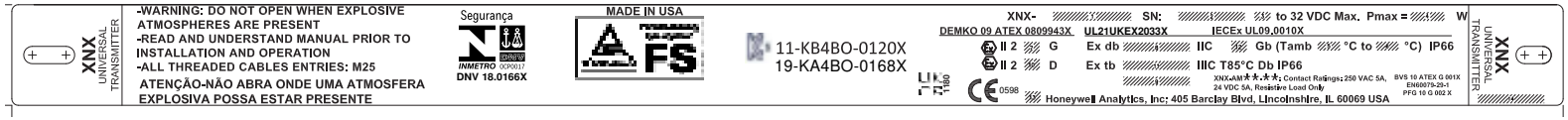

Figure 230. XNX-AM**-***** configuration

Product Identification

The part numbering system encodes all possible XNX configurations. The first four digits describe the enclosure and the sensor. The last five describe the options (the three-digit sensor and range field is reserved for millivolt units). Agency approvals of MPD sensors vary depending on sensor type and part number. Verify that the approvals of both the transmitter and the MPD sensor meet the requirements of the installation.

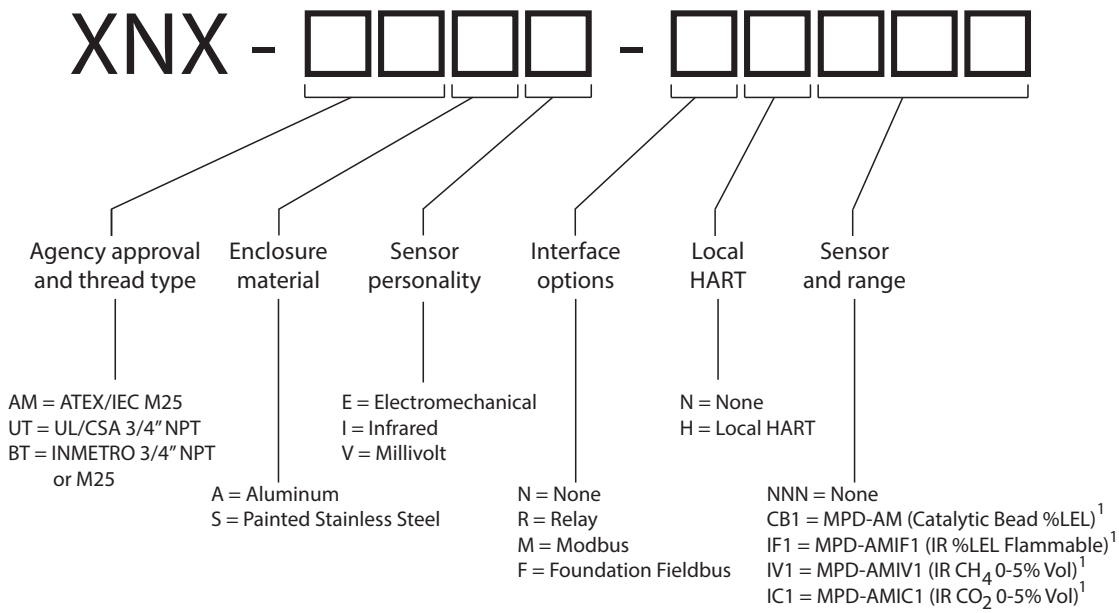

1 Indicates agency approval and port thread specification

EC Replacement Sensors

XNX ID	Target Gas		Cartridge Part Number	Maximum Range	Selectable Range	Increment	Default Range	Cal Gas Range	Cal Gas Part Number	Cal Gas Description
1	O_2	Oxygen	XNXXS01SS	25.0 %Vol	N/A	N/A	25.0 %Vol	20.9 %Vol	N/A	N/A
			XNXXS01FM	23.0% Vol			23.0% Vol			
2	H_2S	Hydrogen Sulfide (Low Range)	XNXXSH3SS	15.0 ppm	N/A	N/A	15.0 ppm	5.0 to 10.0 ppm	GFV263	10 ppm H_2S
3	H_2S	Hydrogen Sulfide	XNXXSH1SS XNXXSH1FM	50.0 ppm	10.0 to 50.0 ppm	0.1 ppm	15.0 ppm	3 to 35 ppm	GFV258	25 ppm H_2S
4	H_2S	Hydrogen Sulfide (High Range)	XNXXSH2SS	500 ppm	50 to 500 ppm	10 ppm	100 ppm	15 to 350 ppm	GFV421	50 ppm H_2S
5	CO	Carbon Monoxide	XNXXSC1SS	1,000 ppm	100 to 500 ppm	100 ppm	300 ppm	30 to 200 ppm	GFV295	100 ppm CO
			XNXXSC1FM		100 to 1,000 ppm					
6	SO_2	Sulfur Dioxide	XNXXSS1SS	20.0 ppm	5.0 to 20.0 ppm	5.0 ppm	15.0 ppm	2 to 14 ppm	Contact HA	7.5 ppm SO_2
7	SO_2	Sulfur Dioxide (High Range)	XNXXSS2SS	50.0 ppm	20.0 to 50.0 ppm	10 ppm	50.0 ppm	6 to 35 ppm	GFV441	25 ppm SO_2
8	NH_3	Ammonia	XNXXSA1SS	200 ppm	50 to 200 ppm	50 ppm	200 ppm	150 to 140 ppm	Contact HA	100 ppm NH_3
9	NH_3	Ammonia (High Range)	XNXXSA2SS	1000 ppm	200 to 1,000 ppm	50 ppm	1,000 ppm	60 to 700 ppm	Contact HA	300 ppm NH_3
10	Cl_2	Chlorine	XNXXSL2SS	5.00 ppm	N/A	N/A	5.00 ppm	2 to 3 ppm	GFV251	2 ppm Cl_2
11	Cl_2	Chlorine (High Range)	XNXXSL1SS	20.0 ppm	5.0 to 20.0 ppm	5.0 ppm	5.0 ppm	2 to 14 ppm	GFV251	2 ppm Cl_2
12	ClO_2	Chlorine Dioxide	XNXXSX1SS	1.00 ppm	N/A	N/A	1.00 ppm	0.3 to 0.7 ppm	Gas Generator	0.5 ppm
13	NO	Nitrogen Monoxide	XNXXSM1SS	100 ppm	N/A	N/A	100 ppm	30 to 70 ppm	GFV216	50 ppm NO
14	NO_2	Nitrogen Dioxide	XNXXSN1SS	50.0 ppm	5.0 to 50.0 ppm	5.0 ppm	10.0 ppm	2 to 35 ppm	GFV435	5 ppm NO_2
15	H_2	Hydrogen	XNXXSG1SS	1000 ppm	N/A	N/A	1,000 ppm	300 to 700 ppm	GFV364	500 ppm H_2
16	H_2	Hydrogen (High Range)	XNXXSG2SS	10,000 ppm	N/A	N/A	10,000 ppm	3,000 to 7,000 ppm	Contact HA	5000 ppm H_2
17	HCl	Hydrogen Chloride	XNXXSR1SS	20.0 ppm	10.0 to 20.0 ppm	1.0 ppm	10.0 ppm	4 to 12 ppm	Contact HA	5 ppm HCl
18	HCN	Hydrogen Cyanide	XNXXSY1SS	30.0 ppm	N/A	N/A	30.0 ppm	9.0 to 21.0 ppm	Contact HA	10.0 ppm HCN in N_2
19	HF	Hydrogen Fluoride	XNXXSF1SS	12.0 ppm	10.0 to 12.0 ppm	0.1 ppm	12.0 ppm	4 to 8 ppm	Contact HA	5 ppm HF
20	O_3	Ozone	XNXXSZ1SS	0.400 ppm	N/A	N/A	0.400 ppm	0.120 to 0.280 ppm	Contact HA	0.200 ppm
21	PH_3	Phosphine	XNXXSP1SS	1.20 ppm	N/A	N/A	1.20 ppm	0.5 to 0.7 ppm	GFV405	0.5 ppm PH_3
22	F_2	Fluorine	XNXXSU1SS	4.0 ppm	N/A	N/A	4.0 ppm	1.2 to 2.8 ppm	Gas Generator	2.0 ppm Cl_2 in N_2
23	EtO	Ethylene Oxide	XNXXSE1SS	50.0 ppm	20.0 to 50.0 ppm	5.0 ppm	25.0 ppm	6.0 to 35.0 ppm	Contact HA	10.0 ppm EtO in N_2

EC Replacement Cells

Replacement Cell Part Number	Target Gas		Cartridge Part Number
S3KO1SS	O_2	Oxygen	XNXXS01SS XNXXSO1FM
S3KH1SS	H_2S	Hydrogen Sulfide (Low Range)	XNXXSH3SS
S3KH1SS S3KH1SS	H_2S	Hydrogen Sulfide	XNXXSH1SS XNXXSH1FM
S3KH2SS	H_2S	Hydrogen Sulfide (High Range)	XNXXSH2SS
S3KC1SS	CO	Carbon Monoxide	XNXXSC1SS XNXXSC1FM
S3KS1SS	SO_2	Sulfur Dioxide	XNXXSS1SS
S3KS1SS	SO_2	Sulfur Dioxide (High Range)	XNXXSS2SS
S3KA1SS	NH_3	Ammonia	XNXXSA1SS
S3KA2SS	NH_3	Ammonia (High Range)	XNXXSA2SS
S3KL1SS	Cl_2	Chlorine	XNXXSL2SS
S3KL1SS	Cl_2	Chlorine (High Range)	XNXXSL1SS
S3KX1SS	ClO_2	Chlorine Dioxide	XNXXSX1SS
S3KM1SS	NO	Nitrogen Monoxide	XNXXSM1SS
S3KN1SS	NO_2	Nitrogen Dioxide	XNXXSN1SS
S3KG1SS	H_2	Hydrogen (Low Range)	XNXXSG1SS
S3KG2SS	H_2	Hydrogen (High Range)	XNXXSG2SS
S3KR1SS	HCl	Hydrogen Chloride	XNXXSR1SS
S3KY1SS	HCN	Hydrogen Cyanide	XNXXSY1SS
S3KF1SS	HF	Hydrogen Fluoride	XNXXSF1SS
S3KZ1SS	O_3	Ozone	XNXXSZ1SS
S3KP1SS	PH_3	Phosphine	XNXXSP1SS
S3KU1SS	F_2	Fluorine	XNXXSU1SS
S3KE1SS	EtO	Ethylene Oxide	XNXXSE1SS

MPD (Multi Purpose Detector)

Similar to the transmitter, the MPD part numbering system defines the agency approval and thread type (i.e., port configuration). The only material selection is stainless steel. Four sensor types are available. Agency approvals are specific to these four sensor types (see Sensor Data). Ensure that the approval of the sensor type meets the requirements of the installation.

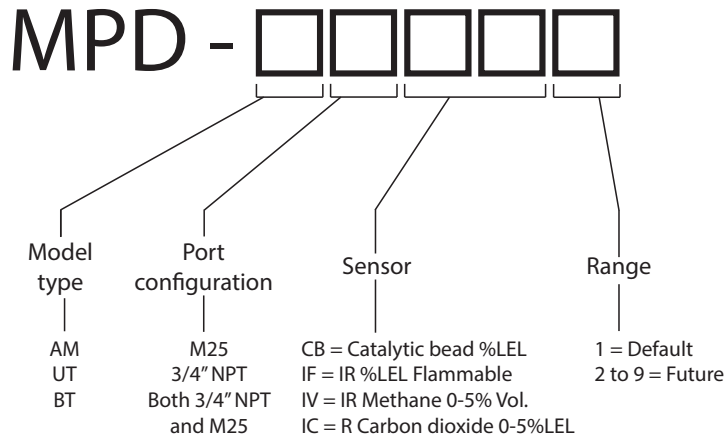

Catalytic Bead and IR Replacement Sensor Cartridges

Sensor Type[1,2]	Target Gas	Cartridge Part Number	Operating Pressure Range (kPa)	Operating Humidity Range (% RH non-condensing)	Air Speed (m/s)	Maximum Range	Selectable Range[3]	Increment	Default Range	Cal Gas Range	Cal Gas Part Number	Cal Gas Description
MPD-IC1	Carbon Dioxide	1226-0301	80 - 110	see footnote 4	0 - 6	5.00 %Vol	1.00 to 5.00 %Vol	1.00 %Vol	5.00 %Vol	1.50 to 3.5 %Vol	Contact HA	2.5 %VOL CO_2 in Air
MPD-IV1	Methane	1226-0299	80 - 110	0 - 95	0 - 6	5.00 %Vol	1.00 to 5.00 %Vol	1.00 %Vol	5.00 %Vol	1.50 to 3.5 %Vol	GFV352	2.5 %VOL CH_4 in Air
	Methane	1226-0299	80 - 110	0 - 95	0 - 6	100 %LEL	1.00 to 5.00 %Vol	1.00 %Vol	5.00 %Vol	1.50 to 3.5 %Vol	GFV352	2.5 %VOL CH_4 in Air
MPD-IF1	Flammables	1226-0300	80 - 110	0 - 95	0 - 6	100 %LEL	20 to 100 %LEL[3]	10 %LEL	100 %LEL	30 to 70 %LEL	GFV406	1 %VOL C_3H_8 in Air
MPDAM-CB1	Flammables	1226A0359	80 - 120	see footnote 5	0 - 6	100 %LEL	20 to 100 %LEL[3]	10 %LEL	100 %LEL	30 to 70 %LEL	GFV352	50 %LEL CH_4 in Air

1. Agency approved hydrogen sensors are MPDAM-CB1 and 705 STD.
2. When ordering replacement MPD sensor cartridges, the replacement cartridge must be the same type as factory configured. Substituting a different cartridge will void agency certification.
3. On XNX %LEL units carrying UL/CSA certifications, the range is fixed at 100%LEL and is not adjustable.
4. Humidity: 5% to 95% RH non-condensing
5. Humidity: 0 to 99% RH non-condensing

Accessories/Spares

See publication 1998-0807 *XNX Universal Transmitter Parts List* for a description of the parts and accessories shipped with the transmitter.

NOTE: All stated accessories are suitable for use over the full range of XNX's environmental conditions (Temperature - 40 °C to + 65 °C, Humidity 0 to 99 % non-condensing, Pressure 80 kPa to 110 kPa). These accessories do not degrade with time and can be stored indefinitely.

NOTE: Weatherproof Cap, Extreme Weather Protector and Collecting Cone may increase the time of response.

Accessory		Part Number	Description
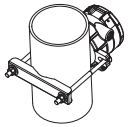	Pipe Mount Kit	1226A0358	For use on pipes from 2-6 inches (50-150mm) in diameter. The kit includes a pipe mount bracket, 2 carriage bolts, nuts and lock washers.
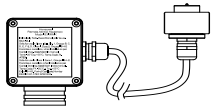	Remote EC Sensor Mounting Kit	S3KRMK S3KRMK45	The remote sensor mounting kits (S3KRMK45) allows the XNX EC sensors to be remotely mounted via an IS cable kit from the transmitter. A choice of cable lengths are available - 50 feet (15 meters) or 148 feet (45 meters) and all are supplied with cable glands and remote terminal box. The cable can be cut to the required length and terminated at the remote terminal box. (It cannot be extended or spliced.)
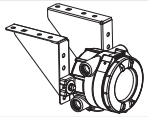	Ceiling Mount Bracket Kit	1226A0355	The optional Ceiling Mount Bracket Kit allows the XNX to be mounted to the ceiling. The kit includes two stainless steel ceiling mount brackets and the necessary bolts and nuts.
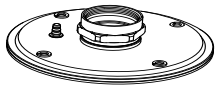	Duct Mount Kit	S3KDMK	The duct mounting kit (S3KDMK) can be used with the EC sensor to allow detection of O2, CO, H2 and H2S gases in ducts. When combined with the MPD Interface Adapter (1226A0382), the duct mounting kit can accommodate the MPD to detect flammable gases in a duct application. The duct mount kit includes the adapter, gasket and required fasteners. The MPD Interface Adapter includes only the adapter and requires the S3KDMK duct mount kit.
	MPD Interface Adaptor	1226A0382	

Accessory		Part Number		Description
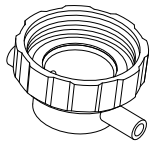	Calibration Gas Flow Adaptor	S3KCAL		EC
		1226A0411		MPD
		00780-A-0035		Sensepoint HT
		00780-A-0035		705
	Calibration Cup	S3KCAL		XNX EC - The calibration cup is used to apply calibration test gas to the sensor. It push fits onto the bottom of the sensor and can be fitted without removing the Weather Housing.
	Weatherproof Cap	Included	XNX EC	The weatherproof cap protects the XNX sensors from harsh weather.
		02000-A-1640	MPD	
		00780-A-0076	Sensepoint	
		02000-A-1635	705	
		SPXCDWP (included)	MPD-*TCB1	
	Extreme Weather Protector	SPXCDWP		Sensor XNX-EC or MPD; the Extreme Weather Protector protects the sensor from environmental conditions in outdoor exposure applications.
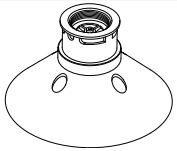	Collecting Cone	S3KCC	XNX EC	The collecting cone improves detection of lighter-than-air gases such as hydrogen and methane.
		02000-A-1642	MPD	
		02000-A-1642	Sensepoint	
		02000-A-1642	705	
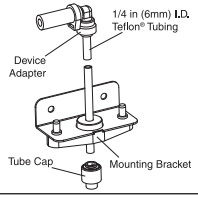	Remote Gassing Kit	1226A0354		The Remote Gassing Kit enables gas to be applied remotely for performing functional response checks. The kit Includes: 50’ Teflon® tubing, the mounting bracket, thetube cap, and device adaptors in 1/4” and 1/8” ID to attach to the bump test ports on the device’s weatherproof cap.

Accessory		Part Number	Description
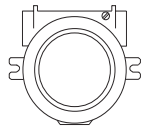	Remote MPD Mounting	2441-0022	UL/CSA Aluminum Junction Box
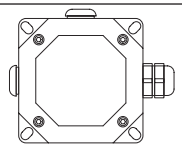		00780-A-0100	ATEX/UKEX/IEC Junction Box (3) M20, (1) M25 entries. “Ex e” ATEX/UKEX and IECEx Approval
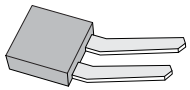	Terminal Block/ Shorting Jumpers	Contact HA	Terminal block jumpers provide an electrical connection without connection to the Personality Board. Install the jumpers between pins 1 and 2 and between pins 3 and 4 to support multi-node wiring.
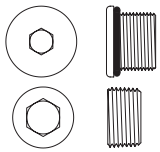	Stopping Plugs	1226-0257	M25 Plug w/protective cap and O-ring. (Certified for use with XNX Universal Transmitter only)
		1226-0258	3/4 NPT w/protective cap. (Certified for use with XNX Universal Transmitter only)
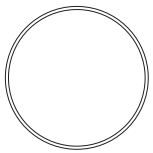	Replacement Cover O-ring	0235-1266	Replacement O-ring for the XNX front cover

Accessory		Part Number	Description
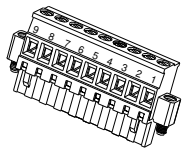	Pluggable Terminal Blocks	1226A0302	Terminal Block Ass'y 6-Pin XNX EC
		1226A0304	Terminal Block Ass'y 9-Pin XNX mV
		1226A0305	IR Terminal Block Kit Includes: 9-Pin and 2-Pin Terminal Blocks
		1226A0306	Relay Terminal Block Kit Includes: 9-Pin and 2-Pin Terminal Blocks
		1226A0307	Terminal Block Ass'y 10-Pin XNX Modbus
		1226A0303	Terminal Block Ass'y 6-Pin FFB
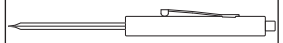	Magnetic Wand/ Screwdriver	1226-0254	Replacement wand for front panel access
	Small Screwdriver	1226-0408	Replacement screwdriver for use on Terminal Block TB2 and TB4 (IR Personality and Relay Option)
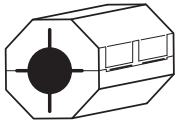	Ferrite Bead	0060-1051	Bead Ferrite MV XNX
	FOUNDATION Fieldbus Ground Cable	0310-0041	Cable Ground FOUNDATION Fieldbus XNX
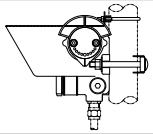	Sunshade	94000-A-1006	For use in high heat and/or direct sunlight environments. The sunshade can be mounted to 2-inch pipe or to a wall with suitable 6mm fasteners.
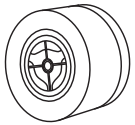	Weather Housing	02000-A-1635	For use with Sensepoint EC sensor products
	Weather Housing	02000-A-1640	For use with Sensepoint combustible sensor products

EC Declaration of Conformity

The latest issue of EC Declaration of Conformity can be downloaded from Honeywell Analytics website. Please visit the XNX product page at the address below and navigate to the Resources section.

https://sps.honeywell.com/us/en/products/safety/gas-and-flame-detection/industrial-fixed/xnx-universal-transmitter

Control Drawings

XNX UL/CSA/FM/ATEX/UKEX/IECEx/INMETRO/RUSSIA

XNX TRANSMITTER WITH FACTORY INSTALLED LOCAL HART OPTION
PART NUMBER XNX-a b c*-*H***
SEE SHEET 4 FOR DETAIL

NOTE1: XNX-a b c*-*H***
a - Agency Approval
A - IECEx based
B - INMETRO
U - North America
R - Russia
b - Port Threads
M - M25
T - 3/4" NPT
c - Enclosure
A - Aluminium
S - Stainless Steel
*- Options

LOCAL HART CONNECTION
XNX UNIVERSAL TRANSMITTER
PERSONALITY OPTION DISPLAY MODULE (POD)
INTERNAL LOCAL HART CONNECTION J1
ALL PERSONALITIES

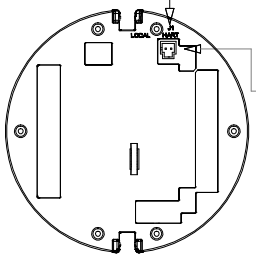

INTERNAL GROUND

EARTH GROUND
REFER TO NOTE 2:

SCREW

LOCAL HART ADAPTER (PART # 1226A0115):
WHEN INSTALLING ADAPTER, A MINIMUM
OF 5-1/4 THREADS MUST BE FULLY ENGAGED
TO MAINTAIN EXPLOSION-PROOF RATING.

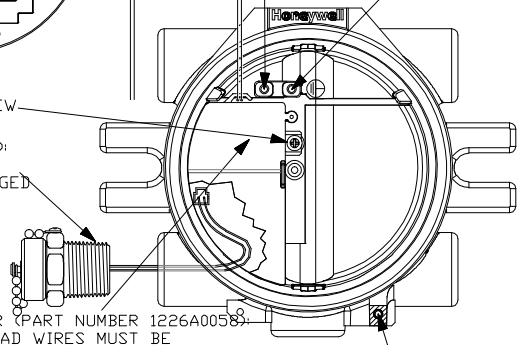

LOCAL HART IS BARRIER (PART NUMBER 1226A0058):
INTRINSICALLY SAFE LEAD WIRES MUST BE
ROUTED BELOW AND FULLY CONTAINED WITHIN
THE ENTRY COMPARTMENT (SHADED) TO MAINTAIN
INTRINSIC SAFETY AND SECURED BY SCREW AS SHOWN.

NOTE 2:
DEDICATED PROTECTIVE CONDUCTOR TERMINAL(EARTH GROUND)
RESTRICT USE TO PROTECTIVE CONDUCTOR WHENEVER
POSSIBLE. IF IT IS ALSO USED FOR OTHER BONDING
PURPOSES, THE PROTECTIVE CONDUCTOR SHALL BE APPLIED
FIRST AND SECURED INDEPENDENTLY OF OTHER
CONNECTIONS.
THE PROTECTIVE CONDUCTOR SHALL BE CONNECTED IN SUCH
A WAY THAT IT IS UNLIKELY TO BE REMOVED DURING
SERVICING THAT DOES NOT REQUIRE DISCONNECTION OF THE
PROTECTIVE CONDUCTOR.

EARTH GROUND

XNX HART INTERFACE

INTRINSICALLY
SAFE HART
DEVICE

SEE NOTES
PAGE 3

INTRINSICALLY SAFE WIRING

HAZARDOUS AREA

XNX
TRANSMITTER

250V Um
MAXIMUM
NON-HAZARDOUS
LOCATION VOLTAGE

TB1-1	+V
TB1-3	0V
TB1-5	+mA
TB1-6	-mA

TO REDUCE THE RISK
OF IGNITION OF
HAZARDOUS
ATMOSPHERES, CONDUIT
RUNS MUST HAVE A
SEAL FITTING INSTALLED
WITHIN 18 INHES
(457mm) OF ENCLOSURE

HAZARDOUS AREA

NON-HAZARDOUS AREA

NON-HAZARDOUS AREA

POWERSOURCE

+V
0V
+
-

CONTROL EQUIPMENT

SUPPLY:*
XNX-a b c V-*H***
16-32 VDC, 6.5W MAX

XNX-a b c I-*H***
18-32 VDC 13.2W MAX

XNX-a b c E-*HNNN
16-32 VDC, 6.2W MAX

* Remark: XNX requires isolated power supply, which is suitably approved for the region

REV	DATE	DESCRIPTION OF REVISION	CAD	CHKD.
6	09/12/17	ECO 9234	JJL	Jef.L
5	08/17/17	DELETE CLASS 2POWER SUPPLY,ADD GROUND MARKING CORRECT APPROVAL NOTES AND T CODE PER ECO 9155	AP	
4	12/6/12	ADD DUST STRING, T4 TO T6, PER ECO 8036	RA	
3	2/12/10	SHTS 1-3: ADDED TEXTS FOR FM/ECO-7754	JAT	
2	03/05/09	REVISED PER AGENCY TO ADD EC & RELEASED/	KKL	
1	02/27/09	ISSUED TO AGENCY/	KKL	
B	02/26/09	REVISED DRAWING PER AGENCY REVIEW	KKL	
A	02/25/09	DRAWN/	KKL	

REVISION RECORD

FIRST PARENT P/N:

DRAWING RELEASE NO.: 226-033

Honeywell

DO NOT SCALE DRAWING.

THIS DRAWING AND THE INFORMATION CONTAINED HEREIN ARE PROPRIETARY TO HONEYWELL ANALYTICS INC. AND SHALL NOT BE USED IN WHOLE OR IN PART WITHOUT THE EXPRESS WRITTEN PERMISSION OF HONEYWELL ANALYTICS INC.

TOLERANCES UNLESS OTHERWISE SPECIFIED
INCH [MM]
X/X ± 1/32 [0.79]
.X ± .015 [0.38]
.XX ± .010 [0.25]
.XXX ± .005 [0.13]
ANGLES ± 1°

DRAWING TITLE: XNX CONTROL DRAWING

APPROVED	SIGNATURE	DATE
MANUFACTURING ENGINEER	M. NIEMEYER	3/3/09
PROJECT ENGINEER	A. RELLA	3/3/09
QUALITY ASSURANCE	B. KOSTER	3/3/09

SCALE: N/A

DRAWING NO.: 1226E0402

REV 6

SHEET 1 OF 4

BSIZE.DWG REV. OCT. 2005

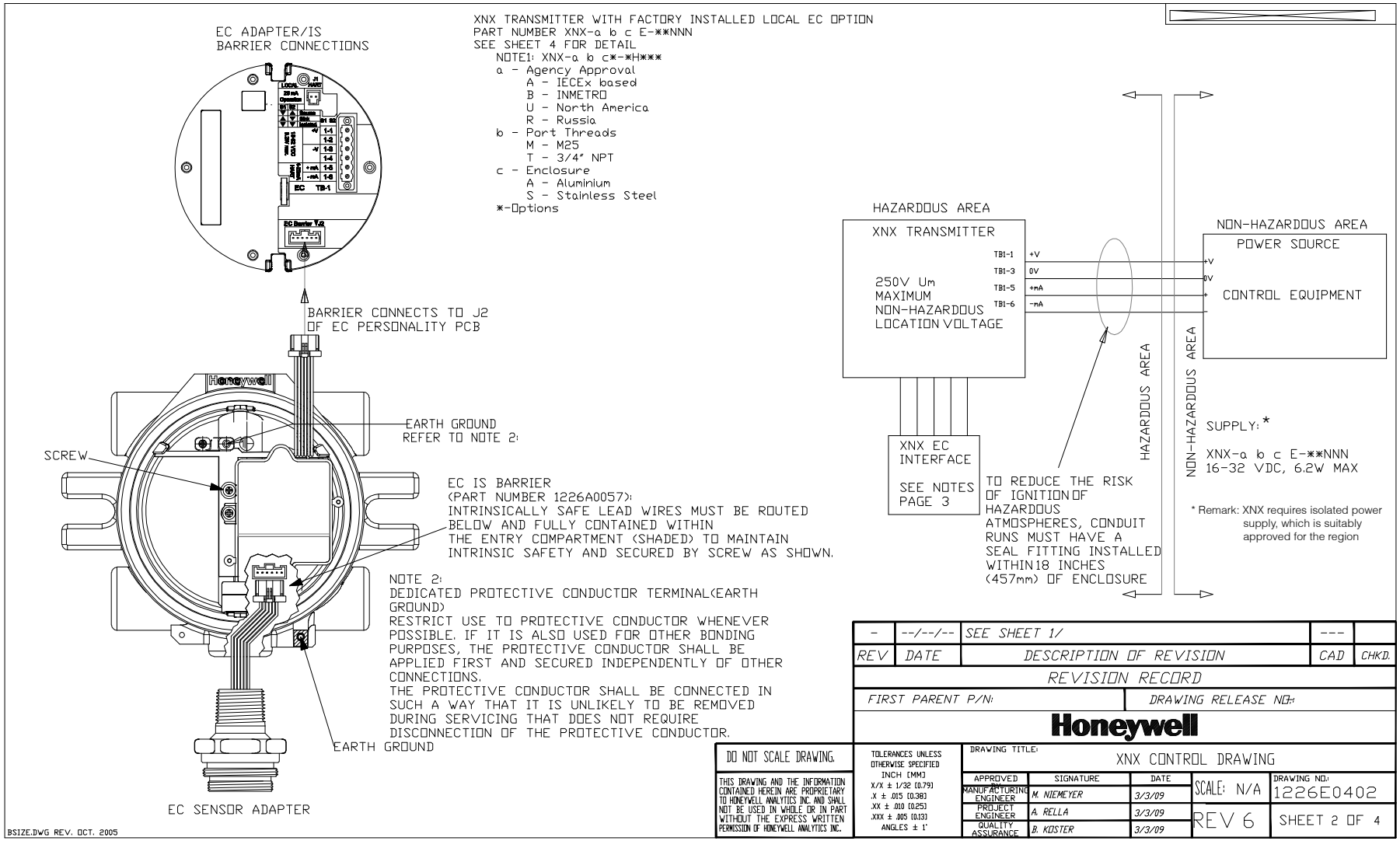
EC ADAPTER/IS
BARRIER CONNECTIONS
XNX TRANSMITTER WITH FACTORY INSTALLED LOCAL EC OPTION
PART NUMBER XNX-a b c E-**NNN
SEE SHEET 4 FOR DETAIL
NOTE1: XNX-a b c*-*H***
a - Agency Approval
A - IECEx based
B - INMETRO
U - North America
R - Russia
b - Port Threads
M - M25
T - 3/4" NPT
c - Enclosure
A - Aluminium
S - Stainless Steel
*-Options
BARRIER CONNECTS TO J2
OF EC PERSONALITY PCB
EARTH GROUND
REFER TO NOTE 2:
SCREW
EC IS BARRIER
(PART NUMBER 1226A0057):
INTRINSICALLY SAFE LEAD WIRES MUST BE ROUTED
BELOW AND FULLY CONTAINED WITHIN
THE ENTRY COMPARTMENT (SHADED) TO MAINTAIN
INTRINSIC SAFETY AND SECURED BY SCREW AS SHOWN.
NOTE 2:
DEDICATED PROTECTIVE CONDUCTOR TERMINAL(EARTH
GROUND)
RESTRICT USE TO PROTECTIVE CONDUCTOR WHENEVER
POSSIBLE. IF IT IS ALSO USED FOR OTHER BONDING
PURPOSES, THE PROTECTIVE CONDUCTOR SHALL BE
APPLIED FIRST AND SECURED INDEPENDENTLY OF OTHER
CONNECTIONS.
THE PROTECTIVE CONDUCTOR SHALL BE CONNECTED IN
SUCH A WAY THAT IT IS UNLIKELY TO BE REMOVED
DURING SERVICING THAT DOES NOT REQUIRE
DISCONNECTION OF THE PROTECTIVE CONDUCTOR.
EARTH GROUND
EC SENSOR ADAPTER
HAZARDOUS AREA
XNX TRANSMITTER
250V Um
MAXIMUM
NON-HAZARDOUS
LOCATION VOLTAGE
TB1-1 +V
TB1-3 0V
TB1-5 +mA
TB1-6 -mA
XNX EC
INTERFACE
SEE NOTES
PAGE 3
TO REDUCE THE RISK
OF IGNITION OF
HAZARDOUS
ATMOSPHERES, CONDUIT
RUNS MUST HAVE A
SEAL FITTING INSTALLED
WITHIN 18 INCHES
(457mm) OF ENCLOSURE
HAZARDOUS AREA
NON-HAZARDOUS AREA
NON-HAZARDOUS AREA
POWER SOURCE
CONTROL EQUIPMENT
SUPPLY: *
XNX-a b c E-**NNN
16-32 VDC, 6.2W MAX
* Remark: XNX requires isolated power
supply, which is suitably
approved for the region
REVISION RECORD
REV
DATE
DESCRIPTION OF REVISION
CAD
CHKD.
SEE SHEET 1/
FIRST PARENT P/N:
DRAWING RELEASE NO:
Honeywell
DO NOT SCALE DRAWING.
THIS DRAWING AND THE INFORMATION CONTAINED HEREIN ARE PROPRIETARY TO HONEYWELL ANALYTICS INC. AND SHALL NOT BE USED IN WHOLE OR IN PART WITHOUT THE EXPRESS WRITTEN PERMISSION OF HONEYWELL ANALYTICS INC.
TOLERANCES UNLESS OTHERWISE SPECIFIED
INCH [MM]
X/X ± 1/32 [0.79]
.X ± .015 [0.38]
.XX ± .010 [0.25]
.XXX ± .005 [0.13]
ANGLES ± 1°
DRAWING TITLE:
XNX CONTROL DRAWING
APPROVED
SIGNATURE
DATE
MANUFACTURING ENGINEER
M. NIEMEYER
3/3/09
PROJECT ENGINEER
A. RELLA
3/3/09
QUALITY ASSURANCE
B. KOSTER
3/3/09
SCALE: N/A
DRAWING NO.:
1226E0402
REV 6
SHEET 2 OF 4
BSIZE.DWG REV. OCT. 2005

XNX TRANSMITTER WITH FACTORY INSTALLED LOCAL HART OPTION

1. ENTITY PARAMETERS OF XNX UNIVERSAL TRANSMITTER LOCAL HART INTERFACE

OUTPUT	INPUT
Uo = 24.15V	Ui = 21.85V
Io = 136mA	Ii = 120mA
Po = 0.82W	Pi = 1.0W
Lo = 1.4mH	Li = 0.0mH
Co = 0.122uF	Ci = 0.0uF

2. THE LOCAL HART DEVICE CONNECTED MUST BE THIRD PARTY LISTED AS INTRINSICALLY SAFE FOR THE APPLICATION, AND HAVE INTRINSICALLY SAFE ENTITY PARAMETERS CONFORMING WITH TABLE 1 BELOW.

TABLE 1

IS HART DEVICE		XNX HART INTERFACE
INPUT		OUTPUT
V max (or Ui)	≥	Voc or Vt (or Uo)
I max (or Ii)	≥	Isc or It (or Io)
P max, Pi	≥	Po
Ci + Ccable	≤	Ca (or Co)
Li + Lcable	≤	La (or Lo)
OUTPUT		INPUT
Voc or Vt (or Uo)	≤	V max (or Ui)
Isc or It (or Io)	≤	I max (or Ii)
Po	≤	P max, Pi
Ca (or Co)	≥	Ci + Ccable
La (or Lo)	≥	Li + Lcable

XNX UNIVERSAL TRANSMITTER WITH EC PERSONALITY

1. ENTITY PARAMETERS OF XNX UNIVERSAL TRANSMITTER EC ADAPTER

OUTPUT		INPUT
Voc or Vt (or Uo) = 5.88 V	≤	V max (or Ui)
Isc or It (or Io) = 84 mA	≤	I max (or Ii)
Po = 123 mW	≤	P max, Pi
Ca (or Co) = 10uF	≥	Ci + Ccable
La (or Lo) = 1 mH	≥	Li + Lcable

BSIZE.DWG REV. OCT. 2005

XNX UNIVERSAL TRANSMITTER WITH EC PERSONALITY AND/OR LOCAL HART

1. THE OUTPUT CURRENT OF THE LOCAL HART AND EC IS BARRIERS ARE LIMITED BY A RESISTOR SUCH THAT THE OUTPUT VOLTAGE-CURRENT PLOT IS A STRAIGHT LINE DRAWN BETWEEN OPEN-CIRCUIT VOLTAGE AND SHORT-CIRCUIT CURRENT.
2. THE ASSOCIATED APPARATUS MAY ALSO BE CONNECTED TO SIMPLE APPARATUS AS DEFINED IN ARTICLE 504.2 AND INSTALLED AND TEMPERATURE CLASSIFIED IN ACCORDANCE WITH ARTICLE 504.10(B) OF THE NATIONAL ELECTRICAL CODE (ANSI/NFPA 70), OR OTHER LOCAL CODES, AS APPLICABLE.
3. CAPACITANCE AND INDUCTANCE OF THE FIELD WIRING FROM THE INTRINSICALLY SAFE EQUIPMENT TO THE ASSOCIATED APPARATUS SHALL BE CALCULATED AND MUST BE INCLUDED IN THE SYSTEM CALCULATIONS AS SHOWN IN TABLE 1. CABLE CAPACITANCE, Ccable, PLUS INTRINSICALLY SAFE EQUIPMENT CAPACITANCE, Ci MUST BE LESS THAN THE MARKED CAPACITANCE, Ca (OR Co), SHOWN ON ANY ASSOCIATED APPARATUS USED. THE SAME APPLIES FOR INDUCTANCE (Lcable, Li AND La OR Lo, RESPECTIVELY). WHERE THE CABLE CAPACITANCE AND INDUCTANCE PER FOOT ARE NOT KNOWN, THE FOLLOWING VALUES SHALL BE USED: Ccable = 60 PF/FT., Lcable = 0.2 µH/FT.
4. THE ASSOCIATED APPARATUS MUST BE CONNECTED TO A SUITABLE GROUND ELECTRODE PER THE NATIONAL ELECTRICAL CODE (ANSI/NFPA 70), THE CANADIAN ELECTRICAL CODE, OR OTHER LOCAL INSTALLATION CODES, AS APPLICABLE. THE RESISTANCE OF THE GROUND PATH MUST BE LESS THAN 1 OHM.
5. INTRINSICALLY SAFE CIRCUITS MUST BE WIRED AND SEPARATED IN ACCORDANCE WITH ARTICLE 504.20 OF THE NATIONAL ELECTRICAL CODE (ANSI/NFPA 70), THE CANADIAN ELECTRICAL CODE, OR OTHER LOCAL CODES, AS APPLICABLE. REFER TO ARTICLE 504.30(B) OF THE NATIONAL ELECTRICAL CODE (ANSI/NFPA 70) AND INSTRUMENT SOCIETY OF AMERICA RECOMMENDED PRACTICE ISA RP12.6 FOR INSTALLING INTRINSICALLY SAFE EQUIPMENT.
6. THIS ASSOCIATED APPARATUS HAS NOT BEEN EVALUATED FOR USE IN COMBINATION WITH AN OTHER ASSOCIATED APPARATUS.
7. CONTROL EQUIPMENT MUST NOT USE OR GENERATE MORE THAN 250 V RMS OR DC WITH RESPECT TO EARTH.
8. FOR AEx ia COMPLIANCE, THE ASSOCIATED APPARATUS MUST BE INSTALLED IN ACCORDANCE WITH NFPA 70, ARTICLE 505.

REV	DATE	DESCRIPTION OF REVISION	CAD	CHKD.
-	--/--/--	SEE SHEET 1/	---	

REVISION RECORD

FIRST PARENT P/N: DRAWING RELEASE NO.: -

Honeywell

DO NOT SCALE DRAWING.

THIS DRAWING AND THE INFORMATION CONTAINED HEREIN ARE PROPRIETARY TO HONEYWELL ANALYTICS INC. AND SHALL NOT BE USED IN WHOLE OR IN PART WITHOUT THE EXPRESS WRITTEN PERMISSION OF HONEYWELL ANALYTICS INC.

TOLERANCES UNLESS OTHERWISE SPECIFIED
INCH [MM]
X/X ± 1/32 [0.79]
.X ± .015 [0.38]
.XX ± .010 [0.25]
.XXX ± .005 [0.13]
ANGLES ± 1°

DRAWING TITLE: XNX CONTROL DRAWING

	SIGNATURE	DATE
APPROVED		
MANUFACTURING ENGINEER	M. NIEMEYER	3/3/09
PROJECT ENGINEER	A. RELLA	3/3/09
QUALITY ASSURANCE	B. KOSTER	3/3/09

SCALE: N/A
REV 6
DRAWING NO.: 1226E0402
SHEET 3 OF 4

Suitable and provides intrinsically safe circuit for use in:

		UL USA/Canada	CSA USA/Canada	FM USA	IECEx & ATEX & KTL & INMETRO	Russia
Division Ratings	Class I, Div 1	Groups A, B, C & D	Groups B, C & D	NO	N/A	N/A
	Class II, Div 1	Groups F & G	Groups F & G When MPD remote mounted			
Zone Ratings		Class I, Zone 1, Group IIC, T6	Class I, Zone 1, Group IIB + H2, T6	Class I, Zone 1, AEx db [ia] IIC Gb See Note 8	Ex db IIC T4/T6 Gb Ex db [ia IIC Ga] IIC T4/T6 Gb	1Ex db IIC T4/T6X 1Ex db [ia IIC] IIC T4/T6X
		Class II, Zone20 & 21	NO	NO	Ex tb IIIC T85°C Db Ex tb [ia IIIC Da] IIIC T85°C Db	Ex tb IIIC T85°CX Ex tb [ia IIIC] IIIC T85X
Ambient Temperature Range		- 40°C to +65°C (-40°F to +149°F) when contain Hart I.S. barrier or EC I.S. barrier, Otherwise - 55°C to +65°C (-67°F to +149°F) NEMA 4X & IP66		Ta = - 40°C to +65°C	- 40°C to +65°C IP66	- 60°C to +65°C IP66
T Code		T6 - Default *	T4	T6 - Default *		

* The rating of the XNX will default the lowest T-Code of any accessory connected to it within the hazardous area. Some common accessories have T codes as follows (examples only – follow certification label on accessory):

Communication Devices (ia) – connected to HART intrinsically safe barrier in XNX:
HART Handheld by Emerson Model 475 Field Communicator – T4
HART Handheld by Honeywell Model MCT404 – T4

Sensors or Sensing Accessories (ia) – connected to EC intrinsically safe barrier in XNX:
EC Sensor – T4

Sensors or Sensing Accessories directly connected to XNX:
MPD – T6
Optima Plus – T86°C (-40 to +55°C), T96°C (-40 to +65°C)
Excel – T6 (-40 to +55°C), T5 (-40°C to +65°C)

REV	DATE	DESCRIPTION OF REVISION	CAD	CHK'D.
-	--/--/--	SEE SHEET 1/	---	

REVISION RECORD

FIRST PARENT P/N: DRAWING RELEASE NO.: -

Honeywell

DO NOT SCALE DRAWING.

THIS DRAWING AND THE INFORMATION CONTAINED HEREIN ARE PROPRIETARY TO HONEYWELL ANALYTICS INC. AND SHALL NOT BE USED IN WHOLE OR IN PART WITHOUT THE EXPRESS WRITTEN PERMISSION OF HONEYWELL ANALYTICS INC.

TOLERANCES UNLESS OTHERWISE SPECIFIED
INCH [MM]
X/X ± 1/32 [0.79]
.X ± .015 [0.38]
.XX ± .010 [0.25]
.XXX ± .005 [0.13]
ANGLES ± 1°

DRAWING TITLE: XNX CONTROL DRAWING

APPROVED	SIGNATURE	DATE
MANUFACTURING ENGINEER	M. NIEMEYER	3/3/09
PROJECT ENGINEER	A. RELLA	3/3/09
QUALITY ASSURANCE	B. KOSTER	3/3/09

SCALE: N/A
REV 6
DRAWING NO.: 1226E0402
SHEET 4 OF 4

BSIZE.DWG REV. OCT. 2005

Remote Sensor Mount

3000E3159 sht. 1

THIS DOCUMENT HAS BEEN GENERATED USING C.A.D AND MUST ONLY BE UPDATED BY C.A.D.

Honeywell

Toxic/Oxygen Sensor Cartridge

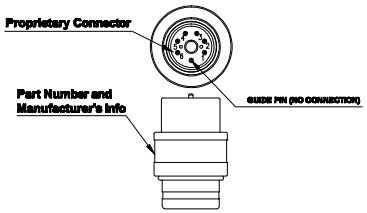

Notes:
1. Intrinsically Safe Device Entity Parameters
   Entity Parameters for Toxic/Oxygen Sensor Cartridge Only
   Ui=5.85V; Ii=0.124A; Pi=0.183W; Li=0uH Ci=5uf
   Vmax Imax Pmax Li=Loable Ci=Cable
   Entity Parameters for Cartridge and Remote Accessory with Cable
   Ui=5.85V; Ii=0.124A; Pi=0.183W; Li=50.292uH Ci=5.015uf
   Vmax Imax Pmax Li=Loable Ci=Cable
2. Associated apparatus output current must be limited by a resistor such that the output voltage-current plot is a straight line drawn between open-circuit voltage and short-circuit current.
   TABLE 1:

I.S. Equipment		Associated Apparatus
V max (or Ui)	>	Voc or Vt (or Uo)
I max (or Ii)	>	Isc or It (or Io)
P max (or Pi)	>	Po
Ci + Cable	<	Ca (or Co)
Li + Loable	<	La (or Lo)

3. Selected associated apparatus must be third party listed as providing intrinsically safe circuits for the application, and have Voc or Vt not exceeding Vmax (or Uo not exceeding Ui), Isc or It not exceeding Imax (or Io not exceeding Ii), and the Po of the associated apparatus must be less than or equal to the Pmax or Pi of the intrinsically safe equipment, as shown in Table above.
4. Control equipment must not use or generate more than 250V rms or dc with respect to earth.
5. Associated apparatus may be in a Division 2 or Zone 2 location if so approved.
6. Associated apparatus must be installed in accordance with its manufacturer's control drawing and Article 504 of the National Electrical Code (ANSI/NFPA 70) for installation in the United States, or Section 18 of the Canadian Electrical Code for installations in Canada.
7. When required by the manufacturer's control drawing, the associated apparatus must be connected to a suitable ground electrode per the National Electrical Code (ANSI/NFPA 70), the Canadian Electrical Code, or other local installation codes, as applicable.
   The resistance of the ground path must be less than 1 ohm.
8. Refer to following table for Specific Part Numbers in this listing.
9. XNXXBC1FM, XNXXBH1FM and XNXXBO1FM shall be installed in accordance with XNX Control Drawing 1226ED402

Gas Type	Sensor Part No.	Gas Type	Sensor Part No.	Gas Type	Sensor Part No.
H2S(L)	S3KXSH1SS or XNXXSH1SS, XNXXSH1FM	O2	S3KXSO1SS or XNXXSO1SS, XNXXSO1FM	CO	S3KXSC1SS or XNXXSC1SS, XNXXSC1FM, S3KXSC3SS, XNXXSC3SS
H2S(H)	S3KXSH2SS or XNXXSH2SS	NH3(L)	S3KXSA1SS or XNXXSA1SS		
H2S(LL)	S3KXSH3SS or XNXXSH3SS	NH3(H)	S3KXSA2SS or XNXXSA2SS	H2(L)	S3KXSG1SS or XNXXSG1SS
HF	S3KXSF1SS or XNXXSF1SS	Cl2(H)	S3KXSL1SS or XNXXSL1SS	H2(H)	S3KXSG2SS or XNXXSG2SS
NO	S3KXSM1SS or XNXXSM1SS	Cl2(L)	S3KXSL2SS or XNXXSL2SS	HCl	S3KXSR1SS or XNXXSR1SS
SO2(L)	S3KXSS1SS or XNXXSS1SS	ClO2	S3KXSX1SS or XNXXSX1SS	HCN	S3KXSY1SS or XNXXSY1SS
SO2(H)	S3KXSS2SS or XNXXSS2SS	NO2	S3KXSN1SS or XNXXSN1SS	O3	S3KXSZ1SS or XNXXSZ1SS
F2	S3KXSU1SS or XNXXSU1SS	ETO	S3KXSE1SS or XNXXSE1SS	PH3	S3KXSP1SS or XNXXSP1SS

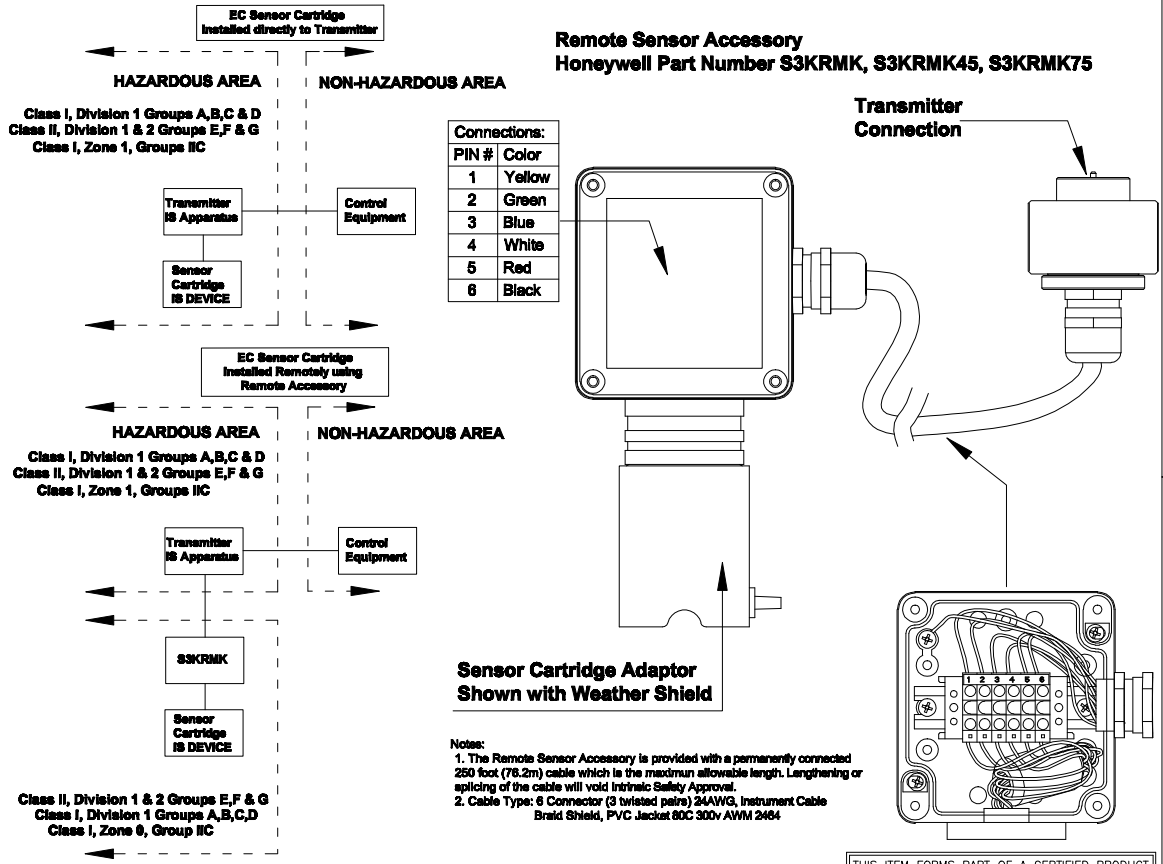

Notes:
1. The Remote Sensor Accessory is provided with a permanently connected 250 foot (76.2m) cable which is the maximum allowable length. Lengthening or splicing of the cable will void Intrinsic Safety Approval.
2. Cable Type: 6 Connector (3 twisted pairs) 24AWG, Instrument Cable Braid Shield, PVC Jacket 80C 300v AWM 2464

THIS ITEM FORMS PART OF A CERTIFIED PRODUCT
NO MODIFICATION PERMITTED WITHOUT
REFERENCE TO CERTIFICATION DEPARTMENT

THIS DRAWING IS CONFIDENTIAL. IT IS THE PROPERTY OF HONEYWELL ANALYTICS LTD AND MUST NOT BE REPRODUCED EITHER WHOLLY OR PARTLY. ALL RIGHTS IN RESPECT OF PATENTS, DESIGNS AND COPYRIGHT ARE RESERVED.

TOLERANCES TO BE AS SPECIFIED BELOW UNLESS OTHERWISE STATED.
DIMENSIONS: 2 DP ± 0.10 mm; 1 DP ± 0.25 mm; NONE ± 0.40 mm; ANGULAR ± 1/2°
HOLES: ø 0 to 8 + 0.08 − 0.0; ø 8 to 14 + 0.1 − 0.0; ø 14 to 25 + 0.12 − 0.0

ALL DIMENSIONS IN MILLIMETRES UNLESS OTHERWISE STATED, AND APPLY AFTER PLATING
THIS DRAWING IS TO BS 8888
REMOVE ALL BURRS AND SHARP EDGES
SURFACE TEXTURE VALUES ARE IN um Ra AND TO BS 1134

FINISH

MATERIAL

	6	5	4	3	2	1
ISSUE						
DATE	12/JAN/15	23/JAN/15	15/DEC/15	22/MAY/15	26/OCT/11	16/NOV/09
CHANGE	ADDED P/N	CHANGED NOTES	CHANGED NOTES	CHANGED NOTES	CHANGED NOTES	NEW DRAWING
APPROVED BY	JEFFREY LEE	JEFFREY LEE	JEFFREY LEE	JEFFREY LEE	JEFFREY LEE	J.Y.JIN

SCALE 1/1
DR'N BEN 16/NOV/09
TITLE XNX_ECC_CARTRIDGE _ CONTROL_DRAWING
3000E3159
SHT. 1 OF 1
A2

HART Protocol

HART Interface

The XNX Universal Transmitter is registered with the HART Communication Foundation.

NOTE

Note: The procedures in this section must be performed only by qualified service personnel.

All XNX transitters can communicate using the HART protocol (defined at www.fieldcommgroup.org by the HART Communication Foundation). HART is unique among fieldbuses in that the digital signal is superimposed on a traditional 4-20 mA current loop. This provides the reliability of analog signaling with the advanced diagnostic capability of a digital device.

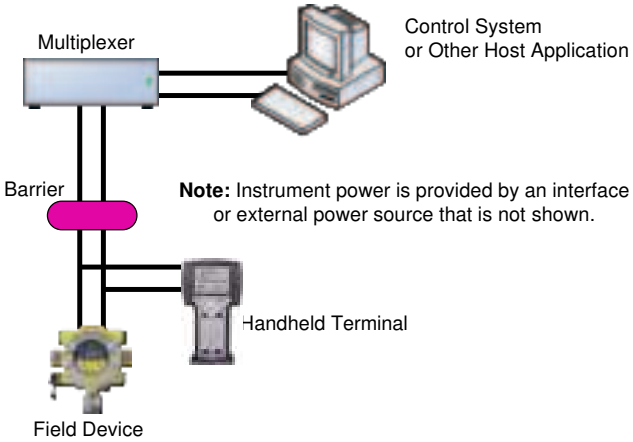

Figure 231. HART point-to-point mode

HART devices are usually connected as point-to-point networks. The analog output of the transmitter can also be disabled to facilitate construction of multidrop, all-digital HART networks.If HART is not needed, the unit can be used as a 4-20 mA transmitter. Since the transmitter is a slave, the internal modem will remain silent if no master signal is present. Additionally the HART signal is at too high a frequency (1200 Hz) to interfere with analog control equipment. Another novel feature of HART networks is that two masters can be present. The primary master is usually a distributed control system (DCS), programmable logic controller (PLC), or a personal computer (PC). The secondary master can be a handheld terminal. The transmitter has been tested with the handheld Emerson field communicator.

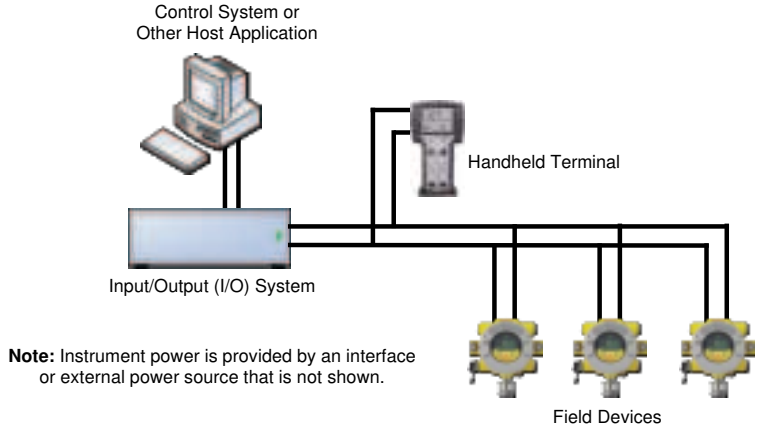

Figure 232. HART multi-point mode

The XNX device descriptor (DD) file provides HART users with data on the capabilities and features of the transmitter. Select HART enabled devices are able to interface with XNX transmitters when

connected via HART communication. A copy of the file is included on the Documentation CD or can be downloaded from the HART(R) Foundation website. This DD file can be installed on HART-enabled Emerson field communicators using the Emerson Easy Upgrade Utility. The DD files are compatible with the software integral to the transmitter. Older transmitters using earlier versions of software require previous versions of the DD files. Contact your local Honeywell representative with any questions regarding software compatibility.

During manufacturing, Honeywell configures the 8-digit HART tag to the XNX serial number. This can be used to confirm correct wiring from the transmitter to the control system. If desired, the HART tag can be modified. The fixed XNX serial number can also be read over HART.

For convenience, the transmitter presents the HART signal on two interfaces. The 1200 Hz AC signal is capacitively coupled to the main mA current analog output. This may be monitored at the control system or at any point along the 20 mA loop. Additionally, the optional local HART interface (Honeywell part number XNX-HIF) permits temporary connection of a HART terminal to the transmitter. This local HART port is transformer-coupled to the main mA current output. This port is intrinsically safe and polarity insensitive. See the Local HART Interface section for more information.

The internal HART modem functions as a high-impedance current source. Thus transferring the HART signal requires a certain minimum loop resistance between the slave and a low-impedance power supply.

Normally, this resistance is supplied by the control system and need not be explicitly added. However, special treatment is needed when the mA current output is not used and the local HART interface is needed. An installer might choose to communicate using relays, Modbus, or FOUNDATION Fieldbus instead. In that case, the supplied 510 ohm resistor must be fitted to create an “artificial” mA current loop. Connect the resistor between TB-1 terminal 1-3 and terminal 1-6. Additionally, place S1 and S2 in source configuration. This is shown schematically in the HART “source” wiring illustration.

The digital HART interface provides all of the capabilities of the local user interface. The transmitter has been designed to use the portable Emerson field communicator with DevCom2000 software for Microsoft Windows® and Emerson AMS Intelligent Device Manager. Using HART, a service person can display information, test, calibrate, and configure. An outline of the HART menus is provided in the Handheld Online Menus section.

ATEX/UKEX Conditions for Safe Use of Intrinsically Safe HART Handheld Devices

For installations in which both the Ci and li of the intrinsically safe apparatus exceeds 1% of the Co and lo parameters of the associated apparatus (excluding the cable), 50% of Co and lo parameters are applicable and shall not be exceeded, i.e., the Ci of the device plus the C of the cable must be less than or equal to 50% of the Co of the associated apparatus, and the li of the device plus the l of the cable must be less than or equal to 50% of the lo of the associated apparatus.

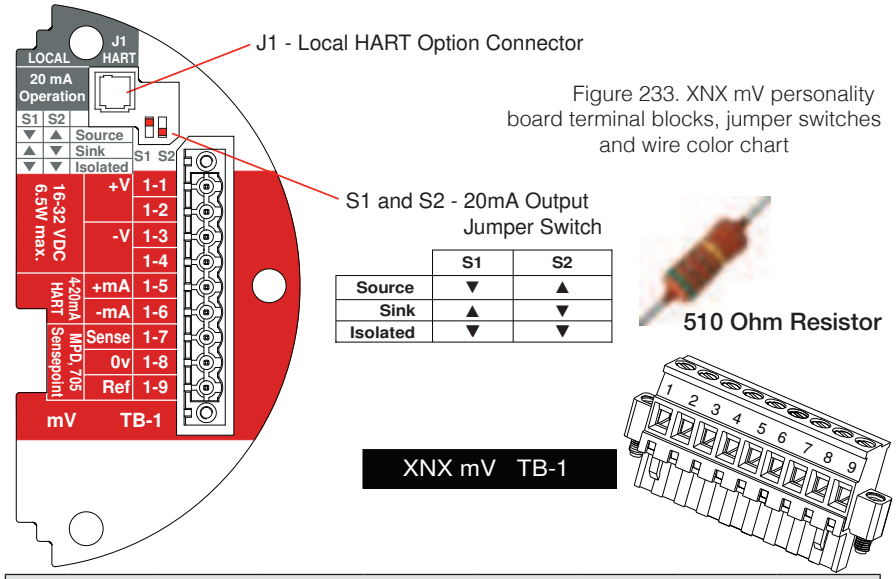

	S1	S2
Source	▼	▲
Sink	▲	▼
Isolated	▼	▼

Figure 233. XNX mV personality board terminal blocks, jumper switches and wire color chart

mV Sensor Type								
		Catalytic Bead				MPD w/IR		
		MPD	705 705HT	S'point S'point HT	S'point PPM	IR 5% CO_2	IR 5% CH_4	IR Flam
TB-1	Desc.	Wire Color from Sensor						
1	24v	See 4-20 mA Output, Common Connections, and Power Settings						
2								
3	Gnd							
4								
5	20mA +							
6	20mA -							
7	Sense	Brown			Red	Brown		
8	0v	White			Green	White		
9	Ref	Blue			Blue	Blue		
				Internal Ground				

⚠ WARNING

Warning: Power off the transmitter before changing S3 or S4. Failure to do this will permanently damage the transmitter. Both switches must be set in either Source or Sink prior to applying power.

HART Sink, Source, and Isolated Wiring

The following figures illustrate the proper HART Multidrop wiring for the transmitter.

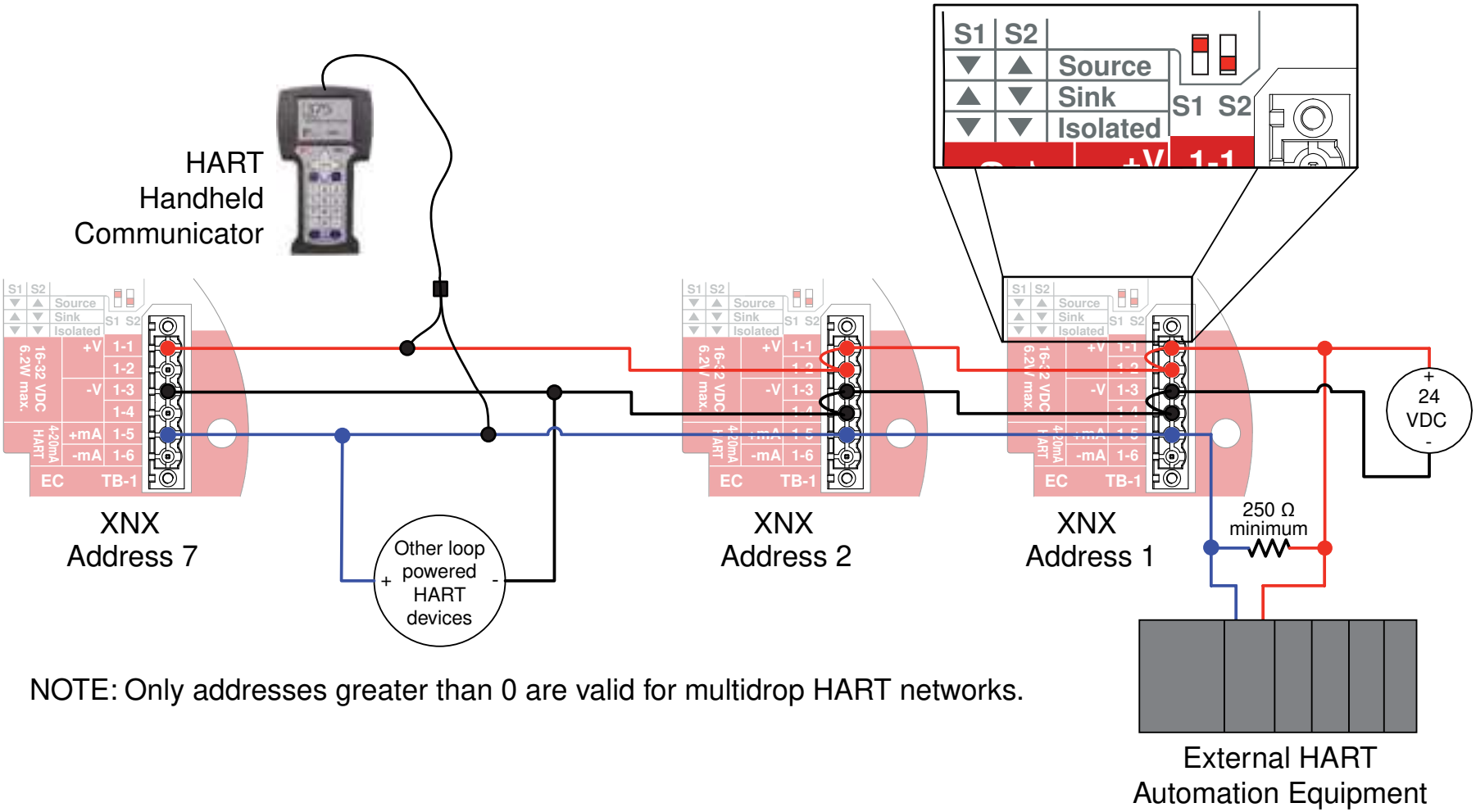

NOTE: Only addresses greater than 0 are valid for multidrop HART networks.

Figure 234. Multidrop HART network wiring - sink

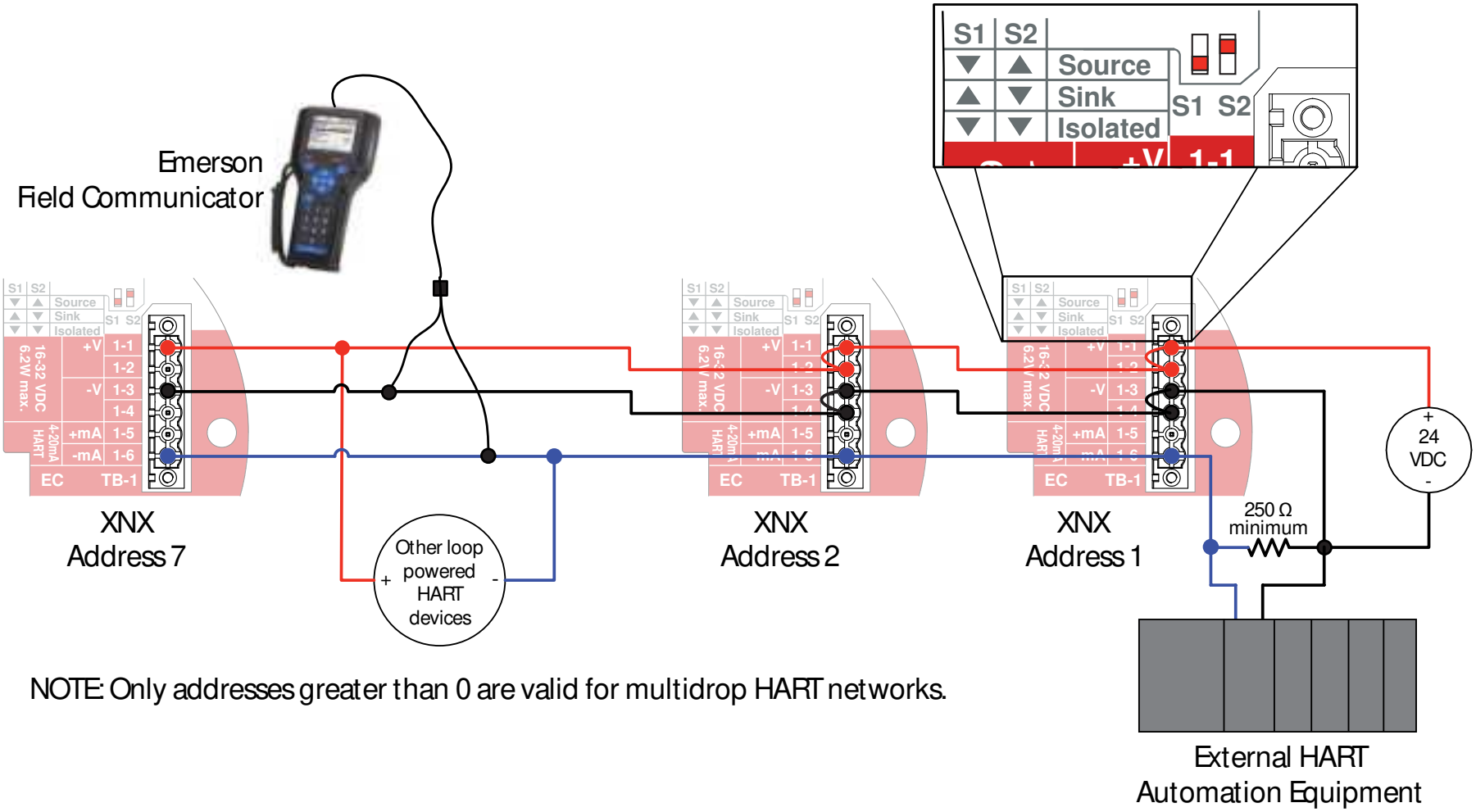

NOTE: Only addresses greater than 0 are valid for multidrop HART networks.

Figure 235. Multidrop HART network wiring - source

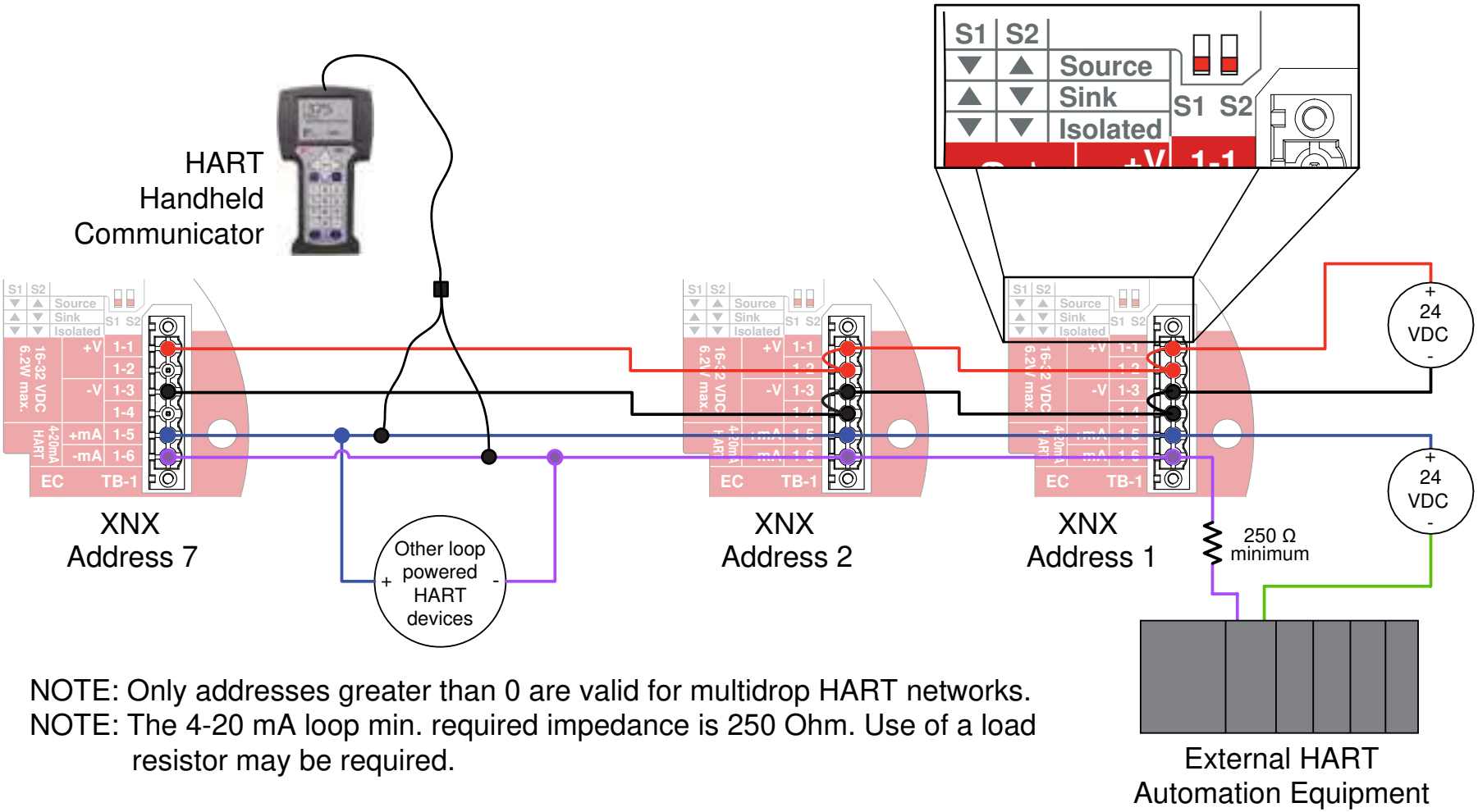

NOTE: Only addresses greater than 0 are valid for multidrop HART networks.
NOTE: The 4-20 mA loop min. required impedance is 250 Ohm. Use of a load resistor may be required.

Figure 236. Multidrop HART network wiring - isolated

DevComm PC-based HART Interface

The XNX-HART interface facilitates remote access to all features of the local user interface including displaying status, testing, calibrating, and configuring. A device descriptor (DD) file is available to adapt standard tools for use with the transmitter.

WARNING

Warning: After changing parameters with a handheld device, verify that the parameter settings are correct at the transmitter.

The following screens show some of the features of these two interfaces for the transmitter.

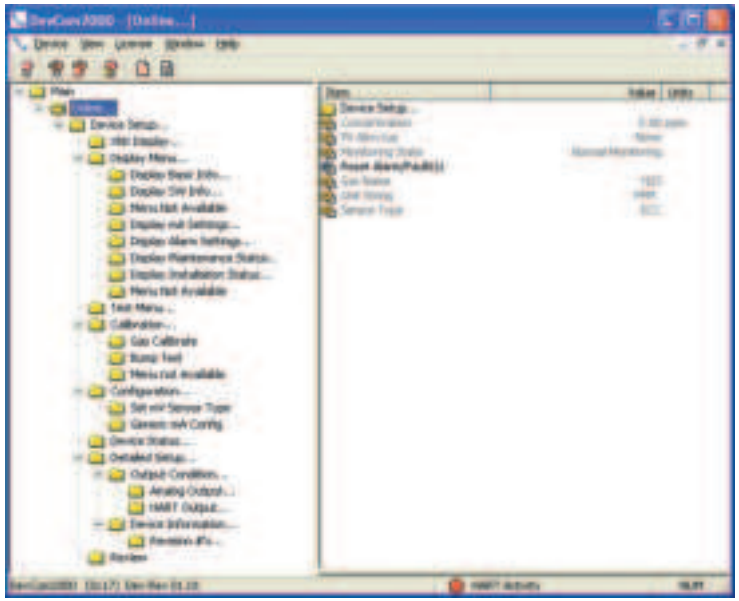

Figure 237. Presentation of XNX data by DevComm2000

Figure 238. XNX data displayed on an Emerson field communicator

Security level 1 is required to select the display language and to adjust the date and time. All other configuration options require security level 2 access.

Functions in the Configure Menu and the security levels required to change them are explained in this table.

Symbol	Description	Security Level
	Select Language	1
	Set Date & Time	1
	Set mV Sensor Type	2
	Set mA Sensor Type	2
	Gas Selection	2
	Range & Alarms	2
	Latching/Non-latching	2
	Set Units	2
	mA Levels	2

Symbol	Description	Security Level
	Calibration Interval	2
	Accept New Sensor Type	2
	Beam Block Options	2
	Path Length	2
	Unit ID	2
	Relay Options	2
	Fieldbus Options	2
	Configure Security	2

Functions

Configuration Summary

All of the HART status information can be extracted from the transmitter as a PDF or text file. This includes voltages, signal strengths, and configuration settings. An example summary is shown below.

Figure 239. HART status information

Information Screens

All of the information in the Configuration Summary can be viewed live on various informational displays. For example, alarm settings are shown in this figure.

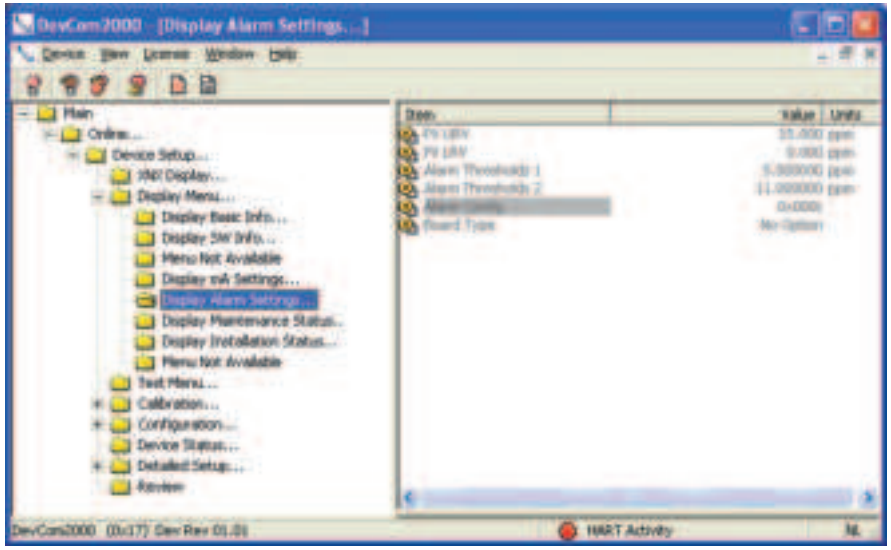

Figure 240. Typical alarm settings display

Event History

The transmitter maintains a record of alarms, warnings, and faults. Additionally, over sixty types of informational events are defined to record important transactions such as recalibrations or configuration changes. One-thousand records are maintained and every event has a timestamp.

Figure 241 HART event history display

Test

The test menu provides methods for inhibiting the output, exercising the analog output, or simulating alarms or faults. These methods simplify common tasks by providing a simple user interface.

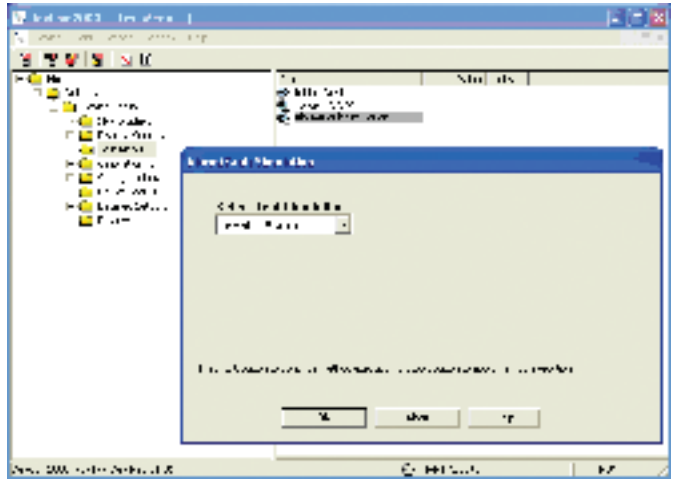

Figure 242. Alarm simulation

Calibration

The Calibration menu permits zero or span calibrations and bump testing. Additionally, when fitted with a Searchline Excel sensor, the Calibration menu displays the optical signal strength for mechanical alignment. The gas calibrate operation is shown below.

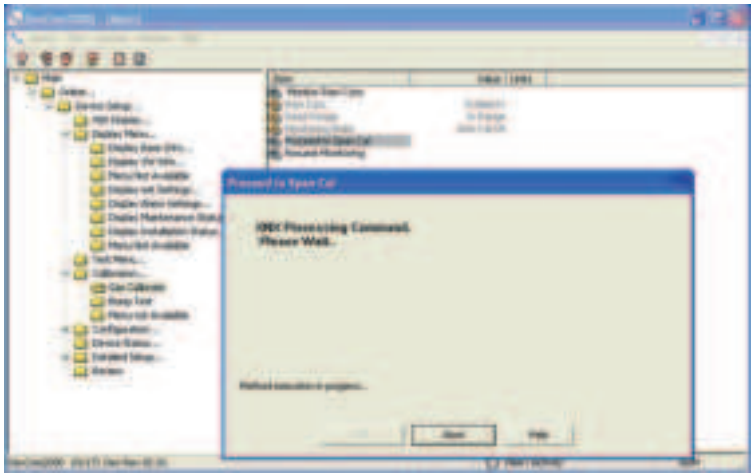

Figure 243. Gas calibrate method

CAUTION

Caution: Do not back out of a menu selection while a calibration is in progress.

Configuration

All user settings of the transmitter can be made either at the local user interface or over HART. The configuration menu facilitates convenient setup of alarm levels as shown in Figure 244. Methods are also provided to set time, units, and other parameters.

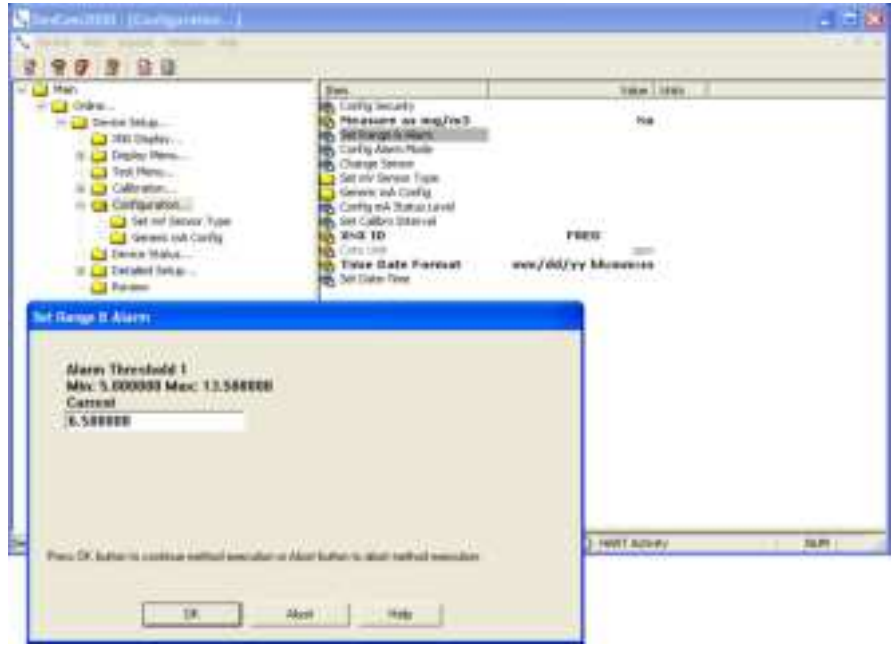

Figure 244. Set range and alarm

Handheld Online Menus

When HART communication is established with the transmitter, the root menu is displayed. This outline shows the submenus:

I. Device setup
- A. User login
  1. Logout [level 0]
  2. Login [level 123]
  3. Exit
- B. XNX display
  1. Concentration (e.g., 0.00%LEL)
  2. PV Alrm Typ (e.g., None)
  3. Fault/Warn number (e.g., F)
  4. Monitoring state (e.g., Normal monitoring)
  5. Time Date format (e.g., mm/dd/yy hh:mm:ss)
  6. Time Date stamp (e.g., 091808 11:57:57)
  7. Gas Name (e.g., Methane LEL)
- C. Display menu
  1. Reset alarm faults
  2. Event history
  3. Display basic info...
     - a. Gas name (e.g., Methane LEL)
     - b. XNX ID (e.g., South tower)
  4. Display SW info...
     - a. Dev id (e.g., 1081234)
     - b. Fld dev rev (e.g., 1)
     - c. Sensor s/w ver (e.g., 48)
     - d. Sensor s/n (e.g. 0)
     - e. as name (e.g., Methane LEL)
     - f. XNX ID (e.g., South tower)
  5. Display optical performance
     - a. Signal strength (e.g., 0.96)
     - b. Ref Sig Strength (e.g., 1.12)
     - c. Sam Sig Strength (e.g., 1.06)
     - d. Baseline (e.g., 0.92)
     - e. Dynamic Reserve (e.g., 96%)
     - f. Window temp (e.g., 28 degC)
  6. Display mA settings
     - a. Overrange current mA (e.g., 21)
     - b. Warning current (e.g., 3)
     - c. Inhibit current (e.g., 2 mA)
  7. Display alarm settings
     - a. PV URV (e.g., 100.000% LEL)
     - b. PV URV (e.g., 0.000% LEL)
     - c. Alarm thresholds 1 (e.g., 20% LEL)
     - d. Alarm thresholds 2 (e.g., 40% LEL)
     - e. Alarm config (e.g., 0x0C)
     - f. Board type (e.g., Modbus/RTU Interf...)
  8. Display menu status
     - a. Sensor type (e.g., ECC)
     - b. Sensor life (e.g., 0 hours)
  9. Display installation status
     - a. Power supply volt... (e.g., 19403 mVolt)
     - b. Operating voltage (e.g., 3297 mVolt)
     - c. Sensor IP voltage (e.g., 0 mVolt)
     - d. Sensor voltage (e.g., 0 mVolt)
     - e. XNX temp (e.g., 33 degC)
     - f. Sensor temp (e.g., 41 degC)
     - g. Loop current (e.g., 4.00 mA)
- D. Test menu
  1. Inhibit long-term
  2. Force mA OP
  3. Alarm/fault simulation

E. Calibration
1. Gas calibrn
2. Bump test
3. Calibrate mA offset
4. Soft reset
5. Align Excel

F. Configuration
1. Config security
2. Measure as mg/m3
3. Set range & alarm
4. Config alarm mode
5. Fieldbus option
6. Set mV sensor type
7. Gas selection
8. Config mA status l...
9. Set Calibrn interval

XNX ID (e.g., South tower)
Conc unit (%LEL)
Time date format (mmddyy hh:mm:ss)
Set date-time

G. Device status

H. Detailed setup
1. Output condition...
2. Device information...

I. Review
1. Manufacturer (Honeywell)
2. Model (XNX)
3. Sensor type (e.g., Optima)
4. PV (%LEL)
5. Info min range (e.g., 100.00% LEL)
6. Info max range (e.g., 100.00% LEL)
7. PV % range (e.g., 0.00%)
8. PV Xfer fnctn (e.g., linear)
9. PV (e.g., 4.000 mA)

PV alrm typ (e.g., none)
Tag (e.g., S. tower)
Long tag
Descriptor (e.g., South tower)
Message (e.g., Cracking tower)
Final asmbly num (e.g., 0)
Dev id (e.g., 1081234)
Universal rev (e.g., 6)
Fld dev rev (e.g., 1)
Software rev (e.g., 38)
Poll addr (e.g., 0)
Loop curnt mode (e.g., Enabled)
Cfg chng count (e.g., 6)
Num req preams (e.g., 9)
Num resp preams (e.g., 7)

II. Concentration

III. PV Alrm Typ

IV. Monitoring State

V. Reset Alarm Fault(s)

VI. Gas Name

VII.Sensor Type

Modbus Protocol

Modbus and the XNX transmitter

The transmitter can be fitted with the optional Modbus interface card (Honeywll part number XNX-MB). Authoritative information on the Modbus protocol can be found at www.modbus.org. The transmitter supports Modbus/RTU over an RS-485 physical layer. The interface is isolated and includes a switchable 120 ohm termination resistor. Baud rates from 1200 to 38,400 are supported with 19,200 as the default (8 data bits, even parity, 1 stop bit).

Most of the operations that are possible with the HART and local user interfaces can also be performed using the Modbus interface. This includes test, calibration and configuration operations. This section describes only how to monitor the transmitter status using Modbus.

Perform the zero calibration before the span calibration. Follow the zero and span calibration procedure in the Zero and Span Calibration for EC/mV Sensors and Searchpoint Optima section.

Some of the relevant Modbus holding registers are listed in the following table. In most installations, the transmitter reads only the first five registers (four data). The assignment of the first eight registers (or six data) is identical to the Honeywell Analytics XCD gas sensor.

Building an effective Modbus automatic gas detection system requires checking for faults (using iFaultWarnNumber or iAlmFltLev) and checking iMonitoringState to confirm that the transmitter is not inhibited or in calibration. The pseudo code example in Figure 245 suggests computation that would be made in external automation equipment.

See Modbus in the Installation and Operation section for information on installing the optional Modbus hardware. See Fieldbus Options for information on setting the Modbus baud rate and address using the local user interface. See the HART Sink, Source, and Isolated Wiring section for information on setting the Modbus parameters using the HART interface.

```
if(
       ((fCurrentConc < TLV) or (iAlmFltLev &  3 == 0))
// low concentration
       and
       ((iFaultWarnNumber < 1000) or (iAlmFltLev & 64 == 0))
// no fault
       and
     ((iMonitoringState == 1) or (iMonitoringState == 7))
// not inhibited
     and
     (
        (Transport layer SW indicates good Comm.)
         or
        (iHeartBeat changes every 5 seconds)
     )               // Modbus link healthy
  ) Then the area is safe.
```

Figure 245. Modbus Pseudo Code Example

Modbus connections are shown in the following figure.

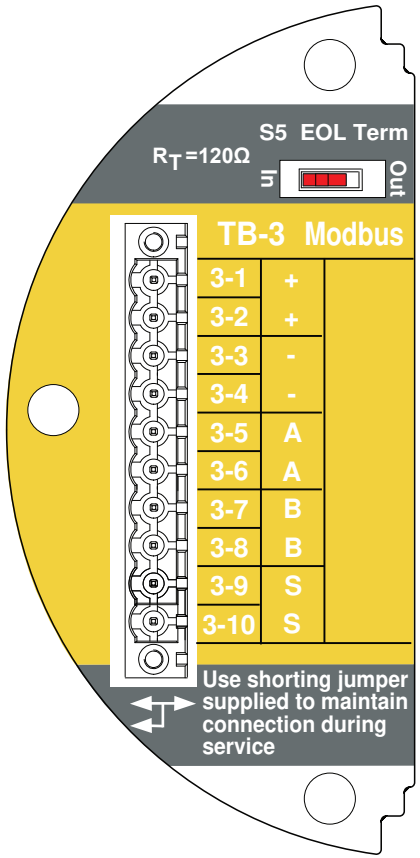

Figure 246. Modbus connections

Modbus Registers

Modbus Holding Register Address	Datatype	Variable Name	Description
40001	Int16	ID	MSB always 0x24 to facilitate automatic identification. LSB repeat of Modbus address.
40002	Int16	ID	Identical to 40001
40003 to 40004	Float32	fCurrentConc	The reported gas concentration in current measurement units. For example, methane at 50% LEL would be reported as 50.0 here. This concentration is forced to zero during inhibit mode.
40005	int16	iFaultWarnNumber	This is the integer representation of the fault status. If any fault exists this will take a value in the range 1000 to 1999. Otherwise, if any warning exists, this will take a value in the range 1 to 999. Normally, this has the value zero. For example, if the transmitter's temperature is out of range, this will take the value 1103.
40006	int8	iAlmFltLev	This register contains 4 meaningful bits regarding the presence of alarms or faults. The bit assignments are as follows: Bit 0: AL1 active Bit 1: AL2 active Bit 4: Warning active Bit 6: Fault Active All others: For future expansion

Modbus Holding Register Address	Datatype	Variable Name	Description
40007	uint8	iMonitoringState	This has the following meanings: 0 reserved 1 normal monitoring 2 in warm-up 3 long-term inhibit 4 alarm simulation 5 fault simulation 6 Loop current stimulated 7 in warning MFlt 8 in Instrument Flt 9 in beam block 10 in bump test 11 short-term inhibit 12 performing zero calibration 13 performing span calibration 14 in pre-zero calibration 15 in pre-span calibration 16 in post-zero calibration, successful 17 in post-span calibration, successful 18 in post-zero calibration, failed 19 in post-span calibration, failed 20 in align Excel mode 21-255 for future expansion
40008	int16	iHeartBeat	This Heartbeat is provided to facilitate detection of communications problems in programming environments where the transport-layer communication error information is unavailable. This increments approximately every 5 seconds. It is the responsibility of the system integrator to notify plant personnel if a Modbus master fails to communicate with the transmitter. This register can facilitate this notification.
40009 to 40010	float32	fSensorLifeDays	This indicates the time remaining before the ECC sensor must be calibrated or replaced.

Modbus Holding Register Address	Datatype	Variable Name	Description
40011	int8	iMeasurementUnits	The meaning of this datum is as enumerated below: 0 Default 1 mg/m3 2 g/m3 3 %vol 4 ppm 5 %LEL 6 UEG 7 Ratio 8 %LEL*M 9 ppm*m 10 EG*m 11 %vol * meter 12 to 255 for future expansion
40012 to 40014	string[5]	strGenericUnits	User-defined 5 character string description for installed generic mA sensor
40015	int8	iWinTemp	If a Searchline Excel is fitted, this is the temperature of the window. Otherwise, this is the temperature of the window.
40016	int8	iTransTemp	Temperature of the transmitter in Celcius.
40017	int8	iSensorTemp	Temperature of the sensor (Optima, Excel, ECC, etc)
40018 to 40026	string[18]	strTransmitterID	User-configured transmitter name.
40027 to 40035	string[18]	sDateTime	Format is “mm/dd/yy hh:mm:ss”. Month and day inverted if so configured.
40036	int8	iSensorType	The meaning of this datum is as enumerated below 1 mV Bridge 2 Electrochemical Cell with toxic cartridge 3 Electrochemical Cell with O2 cartridge 4 Optima 5 Excel 7 generic mA input Others for future expansion
40037	float32	f_mA_Out	The current produced by the transmitter in milliamperes.
40038	int16	iTransVoltage24000	The voltage supplied to the transmitter at the nominal 24.0 volt input, in millivolts.

Modbus Holding Register Address	Datatype	Variable Name	Description
40039	int16	iTransVoltage_3300	The voltage on a nominal 3.3 volt supply in the transmitter, in millivolts.
40041	int16	iOptional3300	The voltage on a nominal 3.3 volt supply in the transmitter option board, in millivolts.
40042	int16	iPersonality3300	The voltage on a nominal 3.3 volt supply in the transmitter personality board, in millivolts.
40043	int16	iPersonality5000	The voltage on a nominal 5.0 volt supply in the transmitter personality board, in millivolts.
40044	int16	iSensVoltage24000	The voltage supplied to an Optima or Excel sensor at the nominal 24.0 volt input, in millivolts.
40045	int16	iSensVoltage_5000	The voltage on a nominal 5.0 volt supply in Optima or Excel, in millivolts.
40046 to 40079	Contact HA for details.		
40080 to 40081	int32	iTransSn	Serial number of XNX.
40082 to 40083	int32	iSensSn	Serial number of Optima, Excel, or ECC cartridge.
40084	int8	iSensSwVer	Integer representation of software version in external sensor or mV personality module
40085	int8	iTransSwVer	Software version of XNX.
40086 to 40155	Contact Honeywell Analytics for details.		

Warranty

Warranty Statement

All products are designed and manufactured to the latest internationally recognized standards by Honeywell Analytics under a Quality Management System that is certified to ISO 9001.

The XNX® Universal Transmitter is warranted by Honeywell Analytics (herein referred to as 'HA') to be free from defects in material or workmanship under normal use and service for:

Device	Warranty Terms
XNX Universal Transmitter (excludes consumables)	**36 months** from date of shipment to buyer
XNX Electrochemical Sensors (Part Number XNX-XS****)	**12 months** from date of commissioning by an approved Honeywell Analytics representative or
Multi-Purpose Detector (MPD)	**18 months** from date of shipment from Honeywell Analytics, whichever is sooner

Service in the field or at the customer's premises is not covered under these warranty terms. Time and travel expenses for on-site warranty services will be charged at Honeywell Analytics' normal billing rates. Contact your Honeywell Analytics Service Representative for information on Service Contracts.

Warranty Conditions

1. The Honeywell Analytics (HA) Limited Product Warranty only extends to the sale of new and unused products to the original buyer where purchased from HA or from a HA authorized distributor, dealer or representative. Not covered are: consumable items such as dry-cell batteries, filters and fuses or routine replacement parts due to the normal wear and tear of the product; any product which in HA's opinion has been altered, neglected, misused or damaged by accident or abnormal conditions of operation, handling, use or severe sensor poisoning; defects attributable to improper installation, repair by an unauthorized person or the use of unauthorized accessories/parts on the product
2. Any claim under the HA Product Warranty must be made within the warranty period and as soon as reasonably possible after a defect is discovered. If a Warranty claim is being sought it is the responsibility of the buyer to obtain a Service Event number (SE#) from HA and if practical return the product clearly marked with the SE# and a full description of the fault.
3. HA, at its sole discretion, may elect to send replacement goods to buyer prior to receipt of the defective goods. Buyer agrees to return defective goods with in 30 days or to pay for the replacement goods.
4. Buyer is responsible for transportation costs from the buyer's location to HA. HA is responsible for transportation costs from HA's location to the buyer.
5. If in the case of a fixed installation or when it is not practical to return the product, the buyer should submit a claim to HA Service Department. A service engineer will attend on site on a day rate basis. Where a valid warranty claim is identified, the faulty product will be repaired or replaced free of charge. A warranty claim will be accepted if all conditions contained within this Warranty are met.
6. When, in the opinion of HA, a warranty claim is valid, HA will repair or replace the defective product free of charge and send it or any replacement back to the buyer. If, in the opinion of HA the warranty claim is not valid, HA will, at the option of the buyer, return the unit unaltered at the buyer's expense, repair the unit at the then prevailing rates, replace the unit with an appropriate replacement item at the then prevailing price, or discard the unit. HA reserves the right to charge for any attendance by its service engineer at the usual rates in force at the time the claim was received.
7. In no event shall HA's liability exceed the original purchase price paid by the buyer for the product.

Consumer Claims

If you purchased your HA product as a consumer, the above warranty conditions do not affect your rights under any applicable consumer protection legislation.

Honeywell Analytics reserves the right to change this policy at any time. Contact Honeywell Analytics for current warranty information.

Index

A

accessories 158
air speed, operating 133
alarm/fault simulation 86
alarm/fault status 88
alarms 72
alarm settings 88
approvals,
  hazardous area 132
  performance 132

B

battery life 131
baud rate 185
beam block options 78
bump test See *functional gas test*

C

cable
  length 56
  ports 131
  recommended 131
cal gas range 136, 137
Calibration 94–108
calibration
  for MPD sensors 61, 102
  gas 95
  gas flow adapter 17
  interval 76
  span 95, 96
  zero 95, 96
cal point 135, 136, 137
cartridges
  catalytic bead replacement 157
  IR replacement 157
  part numbers 135, 136, 137
Cautions 7
ceiling mount bracket kit 18, 158
cells, replacement 156
certifications 31, 72
  by part number series 148–151
chronological list, event, by day 93
collecting cone 18, 159
Communications 12
configuration
  displaying 24
  verifying 84
configure menu 62
construction material 131
Control Drawings 163–170
  remote sensor mount 170
  UL/CSA/FM 167-169
  UL/INMETRO 164-166
controls 20
cover 15
cross-interferents 145

D

daisy-chain 34
date 63, 88
dimensions 131
duct mount kit 19, 158

E

easy reset 83
EC See *electrochemical sensor*
electrochemical sensor 43
  cartridge, replacing with different type 106
  cartridge, replacing with same type 105
  cell 111
  installation 43
  operational life 105
enclosure
  aluminum 14
  stainless steel 14
event history 88, 92
Excel, aligning 107

F

fieldbus
  options 82
  settings 88, 91
finish, marine 14
flow housing 103
force relays 88, 86
FOUNDATION Fieldbus 59
front panel 19
functional gas test 24, 105, 106

G

gas calibration 24, 95
gas data 88, 90
gases, selectable 66
gas name, changing 67
general status screen 21, 60
greases, airborne 145

H

H_2S sensors, calibrating 99
HART
  devices 56
  handheld online menu 182–183
  interface 172–174
  local 16
  local handheld 172-178, 182-183
  output 12
  protocol 55, 172–184
hex key 15
humidity 131, 135, 136, 137
hydrogen sensors 146

I

information 9
information menu 88
inhibit 84
Installation and Operation 29–93
installation
  daisy-chain 34
  maximum distance 36
  multiple transmitter 34
  single transmitter 34
  types of 34
intrinsic safety 6, 16, 33
Introduction 10–28
IP rating 131
IS See *intrinsic safety*

J

jumpers 41, 131, 160
jumper switch 58

L

labels, certification 152, 153
language 24
  selecting 63
latching 74
LCD. See *liquid crystal display*
LDL. See *lower detection limit*
LED. See *light emitting diode*
light emitting diode 20, 22
  test 60
liquid crystal display 49, 60
lower detection limit 135, 136, 137

M

magnetic wand/screwdriver 15, 19, 160
main menu 24
Maintenance 109-112
mA devices
  generic, connecting 50
  mA levels 76
mA
  level settings 88,90
  output, calibrating 95, 107
  output, forcing 85
  sensor type 65
menu map 25
menu structure 22
messages
  fault 119-125
  informational 128–129
  warning 114–117
Modbus 17, 58
  interface card 185
  protocol 185–190
  registers 187–190
mounting kit, EC sensor remote 44
mounting the enclosure 131
MPD See *multi-purpose detector*
multi-purpose detector 103
  interface adapter 158
  performance 146
  sensor cartridge 110
multidrop mode 56
mV
  personality wiring 45
  remote sensor 47

N

navigation 20
non-latching. See *latching*
numeric format, selecting 74

O

off-scale readings 6, 66
operating voltage 131
option board 40, 59
ordering information 158
organic vapors 145
O-ring, front cover 160

P

part numbers 88, 158-161
parts list 158
passcode screens 84
personality board 38, 41
  electrochemical 42
  IR 49, 51
  mV 45-46
personality, options, and display (POD) 15
pipe mount kit 17, 158
POD. See *personality, options, and display*
point-to-point mode 55
power consumption 131
pressure
  barometric 135, 136, 138
  operating 133
product description 11-13

R

range 72, 135, 136, 137
range/alarm settings 90
real time clock 131
Reflex cell fault diagnosis 11
relay
  data 91
  options 16, 57, 81
  settings 88
remote
  sensor mounting kit 18, 158
  gassing kit 18, 159
  MPD mounting 159
response time 135, 136, 137

S

Safety and Information 5–9
screwdriver 160
Searchline Excel 53, 60, 107
  connecting 49
Searchpoint Optima Plus 53
  connecting 49
security access level 22. 62, 64
security, configuring 83
Sensepoint HT, calibrating 100
sensors 16–28
  cross-sensitivity 139–145
  location 30
  mounting 30
  performance 137
  replacement 155
  status 88, 90
  types 11
serial number 23, 88, 173
settings, displaying 24
shorting jumpers See *jumpers*
signal 131
silicone compounds 145
simulation switch 40, 59
soft reset 107, 108
solvents 145
span calibration 96, 97, 99, 102
spares 158
Specifications 130-162
stopping plugs 160
switch configuration 39
system conditioning 146

T

temperature 131, 135, 136, 137
  ranges, extended 138
  range, standard 138
terminal blocks 40, 59
  connections 41
  jumpers 160
  pluggable 160
termination 131
test menu 84
time 24, 64, 88
transmitter
  configuring 62
  data 88
  information, displaying 23
  status 88, 89
  testing 24

U

units name, changing 67
units, setting 75
user interface 131

W

warm-up time 133
Warnings 6
Warnings and Faults 113-129
Warranty 191–192
weatherproof cap 18, 159
weather protector 18, 159
weight 131
wiring
  sink 40, 50, 175
  source 40, 50, 176
  isolated 40, 177

Z

zero calibration 96, 97, 99, 102

This page is intentionally left blank

Find out more
www.sps.honeywell.com

Contact Honeywell Analytics:

Europe, Middle East, Africa
Life Safety Distribution GmbH
Tel: 00800 333 222 44 (Freephone no.)
Tel: +41 (0)44 943 4380 (Alternative no.)
Middle East Tel: +971 4 450 5800 (Fixed Gas Detection)
Middle East Tel: +971 4 450 5852 (Portable Gas Detection)
gasdetection@honeywell.com

Americas
Honeywell Analytics Inc.
Tel: +1 847 955 8200
Toll free: +1 800 538 0363
detectgas@honeywell.com

Asia Pacific
Honeywell Co., Ltd.
Tel: +82 (0) 2 6909 0300
India Tel: +91 124 4752700
China Tel: +86 10 5885 8788-3000
analytics.ap@honeywell.com

Technical Services
EMEA: HAexpert@honeywell.com
US: ha.us.service@honeywell.com
AP: ha.ap.service@honeywell.com

www.sps.honeywell.com

Please Note:
While every effort has been made to ensure accuracy in this publication, no responsibility can be accepted for errors or omissions. Data may change, as well as legislation and you are strongly advised to obtain copies of the most recently issued regulations, standards and guidelines. This publication is not intended to form the basis of a contract.

Honeywell

1998M0738
Revision 19 11/24
©2024 Honeywell Co., Ltd.