LS 1350

LS 1351

Scan the QR code for support information

vtech®

Congratulations

on purchasing your new VTech product. Before using this telephone, please read Important safety instructions.

This manual has all the feature operations and troubleshooting necessary to install and operate your new VTech telephone. Please review this manual thoroughly to ensure proper installation and operation of this innovative and feature rich VTech product.

Important safety instructions

When using your telephone equipment, basic safety precautions should always be followed to reduce the risk of fire, electric shock and injury, including the following:

1. Read and understand all instructions.
2. Follow all warnings and instructions marked on the product.
3. Unplug this product from the wall outlet before cleaning. Do not use liquid or aerosol cleaners. Use a damp cloth for cleaning.
4. Do not use this product near water (for example, near a bath tub, kitchen sink, swimming pool).
5. Do not expose the telephone to direct sunlight or extreme cold environment. Do not put the telephone close to heating sources such as radiators, cookers, etc.
6. Do not overload wall outlets and extension cords as this can result in the risk of fire or electric shock.
7. Unplug this product from the wall outlet and refer servicing to VTech/distributor under the following conditions:
   - When the power supply cord or plug is damaged or frayed.
   - If the product does not operate normally by following the operating instructions.
   - If the product has been dropped and the cabinet has been damaged.
   - If the product exhibits a distinct change in performance.
8. Avoid using a telephone (other than a cordless type) during an electrical storm. There may be a remote risk of electric shock from lightning.
9. Do not use the telephone to report a gas leak in the vicinity of the leak.
10. Use only the supplied NiMH (Nickel Metal Hydride) batteries! The operation periods for the handsets are only applicable with the default battery capacities.
11. The use of other battery types or non-rechargeable batteries/primary cells can be dangerous. These may cause interference and/or unit damages. The manufacturer will not be held liable for damage arising from such non-compliance.
12. Do not use third party charging bays. The batteries may be damaged.
13. Please note the correct polarity while inserting the batteries.
14. Battery should not be exposed to excessive heat such as bright sunshine or fire and immersed in water.
15. The batteries cannot be subjected to high or low extreme temperature and low air pressure at high altitude during use, storage or transportation. Disposal of batteries into fire or a hot oven, or mechanically crushing or cutting or the batteries can result in an explosion. Leaving the batteries in an extremely high temperature surrounding environment can result in an explosion or the leakage of flammable liquid of gas. Batteries subjected to extremely low air pressure may result in an explosion or the leakage of flammable liquid or gas.
16.

    Use only adaptors and batteries listed below; Use only the provided external power supply:
    - VTech Telecommunications Limited. Model: VT05EEU06045 | VT05EUK06045.
    - Jiangxi Jian Aohai Technology Co., Ltd. Model: A318-060045W-EU1 (EU plug) | A318-060045W-UK1 (UK plug).

    Use only the supplied batteries:
    - Yi Yang Corun Battery Co., Ltd. Model: Ni-MH AAA 400mAh 1.2V; GPI. Model: VT40AAAHC 1.2V 400mAh; Highpower. Model: HFR-AAA400 1.2V 400mAh.

Disposal of Old Equipment and Batteries (WEEE)

Only for European Union and countries with recycling systems

These symbols (a, b) on the products, packaging, and/or accompanying documents mean that used electrical and electronic products and batteries must not be mixed with general household waste. For proper treatment, recovery and recycling of old products and batteries, please take them to applicable collection points in accordance with your national legislation.

a)

b)

By disposing of them correctly, you will help to save valuable resources and prevent any potential negative effects on human health and the environment.

For more information about collection and recycling, please contact your local municipality. Penalties may be applicable for incorrect disposal of this waste, in accordance with national legislation.

Product disposal instructions for business users

If you wish to discard electrical and electronic equipment, please contact your dealer or supplier for further information.

Information on Disposal in other countries outside the European Union

These symbols (a, b) are only valid in the European Union. If you wish to discard these items, please contact your local authorities or dealer and ask for the correct method of disposal.

Note for the battery symbol

This symbol (b) might be used in combination with a chemical symbol. In this case it complies with the requirement set by the Directive for the chemical involved.

Recycle your device (WEEE directive 2012/19/EU)

The WEEE logo appears on the product to indicate that this product must not be disposed off or dumped with your other household wastes. You are liable to dispose of all your electronic or electrical waste equipment by relocating over to the specified collection point for recycling of such hazardous waste.

Approval and conformity

This product is intended for use within Europe and the UK. This equipment complies with the essential requirements to EU's Radio Equipment Directive (2014/53/EU) and the UK's Radio Regulations 2017 on radio systems and telecommunication equipment.
VTech Telecommunication Ltd. hereby declares that this telephone LS1350/LS1351 is in compliance with the essential requirements and other relevant provisions of EU's Radio Equipment Directive (2014/53/EU) and the UK's Radio Equipment Regulations 2017.

The declaration of conformity may be viewed at www.vtechphones.eu.

The CE symbol confirms the conformity of the telephone and the above directive. UKCA

Importer: VTech Electronics Europe Plc.
Napier Court, Abingdon Science Park, Abingdon, Oxon, OX14 3YT.

Manufacturer: VTech Telecommunications Ltd.
23/F, Tai Ping Industrial Centre, Block 1, 57 Ting Kok Road, Tai Po, Hong Kong.

Technical Specifications

Frequency control	Crystal controlled PLL synthesizer
Transmit frequency	1.88GHz to 1.9GHz
RF power	<250mW
Channels	10
Nominal effective range	Actual operating range may vary according to environment conditions at the time of use.
⚠ Power requirements	**Handset:** Battery: 1) Yi Yang Corun Battery Co., Ltd; Ni-MH AAA 400mAh 1.2V 2) GPI; VT40AAAHC 1.2V 400mAh 3) Highpower; HFR-AAA400 1.2V 400mAh **Base / Charger:** Adaptor: VTPL: VT05EEU06045 Jiangxi Jian Aohai Technology Co., Ltd.: A318-060045W-EU1 Input 100-240V AC 50/60Hz 0.15A, Output 6VDC 0.45A 2.7W (EU plug). VTPL: VT05EUK06045 Jiangxi Jian Aohai Technology Co., Ltd.: A318-060045W-UK1 Input 100-240V AC 50/60Hz 0.15A, Output 6VDC 0.45A 2.7W (UK plug).
Power consumption	Operating condition Off mode: <1W Network standby mode: <1W

Limited Warranty

Customer Service and Product Warranty

IMPORTANT

Please retain this guide with your sales receipt as proof of the date of purchase.

Customer Service

Please call our Customer Services Department at 0330 678 1988 or email to service-ukphone@vtechphones.eu and a service representative will be happy to help you.

PRODUCT WARRANTY

ONE YEAR PRODUCT WARRANTY

Thank you for choosing this quality product from VTech.

1. The product detailed above is covered by a one year warranty from the date of purchase, against any defects in materials or workmanship.
2. The product may be returned to the place of purchase.
3. If the product covered by this warranty is damaged due to misuse, modification or unauthoried repair, or because of faulty batteries, battery discharge or incorrect electrical connections, then this warranty becomes void.
4. This warranty is personal to the original purchaser and is not transferable.
5. Breakages to the LCD screen are not covered by the warranty.

VTech Electronics Europe Plc, c/o XPO Logistics, Warehouse 350, Cat & Fiddle Lane, West Hallam, DE7 6HE

THIS WARRANTY IS OFFERED AS AN EXTRA BENEFIT AND DOES NOT AFFECT CONSUMERS' STATUTORY RIGHTS.

This warranty is valid for the UK and Ireland only. For products purchased outside the UK and Ireland, please contact your local distributor or place of purchase.

Important safety instructions **3**
What is in the box **12**
Connect and charge **13**
Install the battery 13
Connect the telephone base 13
Charge the battery 14
Check the battery level 15
Check for dial tone 15
If you do not hear a dial tone 15
Set date and time **16**
Operating range **16**
Handset Overview **16**
Handset display icons overview 18
Telephone base Overview **19**
Menu navigation **20**
In idle mode 20
Call list 20
Phonebook 20
Call blocker 20
BS settings 20
HS settings 20
Registration 20
Default 20
Ans. Machine 20

Make, answer or end a call 21
Predial a call 21
Answer a call 21
Using a cordless handset 21
End a call 21
Using a cordless handset 21
Turn the handset ringer on/off 21
Turn the keypad lock on/off 21
Share call 21
To make a 3-way conversation 21
Adjust listening volume 21
To adjust the listening volume on a cordless handset 21
Call waiting 22
Redial list 22
Review a redial list entry 22
Store a redial number into the phonebook 22
Redial a call from list 22
Using a cordless handset 22
Delete a redial list entry 23
Delete all redial entries 23
Find handset 23
To start paging 23
To end paging 23
Use the phone menu 24
Phonebook 24
Add a phonebook entry 24
Review the phonebook entries 24
Check number of phonebook entry used 25
Dial a phonebook entry 25
Edit a phonebook entry 25
Delete a phonebook entry/ all entries 26
Add a phonebook entry to white list 26
Caller ID 26
Save a caller ID log entry to the phonebook 26
While entering names and numbers 27
Save a caller ID log entry to blacklist 27
Dial a caller ID log entry 27
Delete a caller ID entry 27
Block unknown calls 28
Block mode 28
Call type 28
Call block 28
Add a call block entry 28
While entering names and numbers 29
Review call block list 29
Edit a call block entry 29
Delete a call block entry 29
Retrieve voicemail 30
Answering system 30
Message playback 30
Control the playback 31
Delete all messages 32
Record memo 32
Turn on/ off the answering system 32

Handset settings **33**
Set languages 33
Set date and time 33
Set date format 33
Set time format 33
Set date 33
Set time 33
Ringer 34
Set ringer melody 34
Set ringer volume 34
Tone settings 35
Set key tone on or off 35
Set alert tones on or off 35
Alarm 35
Set alarm on or off and alarm time 35
Configure handset display 36
Rename handset 36
Display handset name or time 36
Set auto answer 36
Select base 36
Base settings **37**
Delete handset 37
Set dial mode 37
Change length of flash time 37
Change the system PIN 38
ECO range and mode 38
Set ECO range 38
Turn on or off Full ECO 38
Register a handset **39**
Reset phone settings **39**
Answering system and settings **40**
Set your built-in answering system 40
Set the answer mode 40
Select the answering system language 40
Default outgoing message 41
Record your own outgoing message 41
Play and delete your outgoing message 41
Options during playback 42
Set answer delay 42
Set record time 42
Turn on or off the call screening 43
Turn on/ off remote access 43
Change the remote access PIN 43
General product care **44**
Taking care of your telephone 44
Avoid rough treatment 44
Avoid water 44
Electrical storms 44
Cleaning your telephone 44
Storage 44
Frequently asked questions **45**

What is in the box

Your telephone package contains the following items. Save your sales receipt and original packaging in case it is necessary to ship your telephone for warranty service.

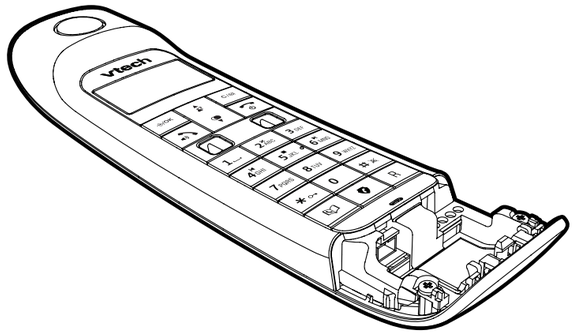

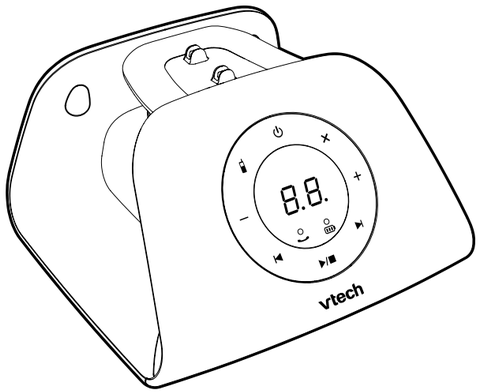

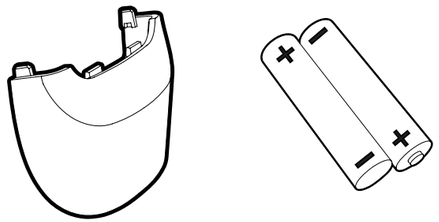

1 set for LS1350
2 sets for LS1351

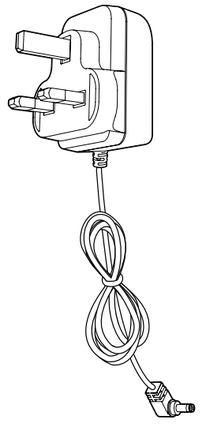

1 set for LS1350/LS1351

1 set for LS1351

Connect and charge

Install the battery

NOTES

- Use only the battery provided.
- Charge the battery provided with this product only in accordance with the instructions and limitations specified in this manual.
- If the handset will not be used for a long time, disconnect and remove the battery to prevent possible leakage.

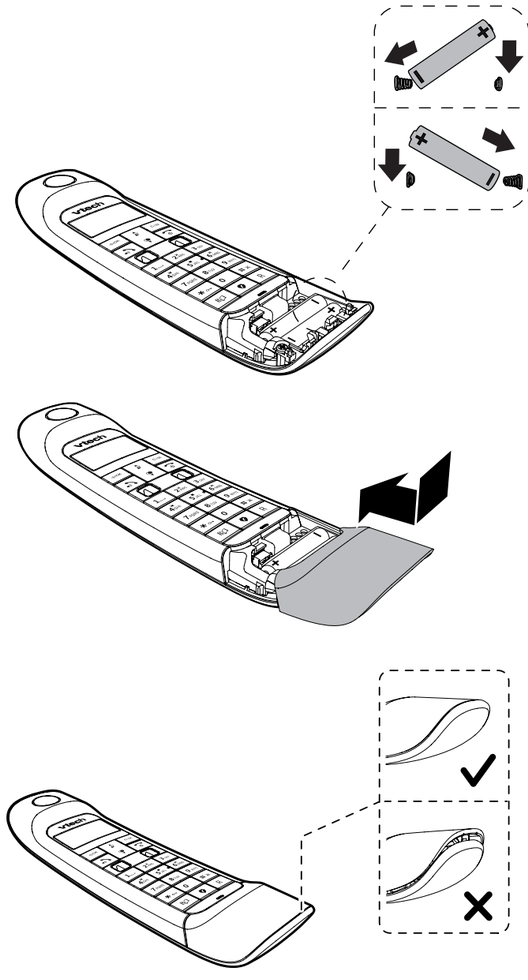

Connect the telephone base

NOTES

- Use only the adapters provided.
- Make sure the electrical outlets are not controlled by wall switches.
- Connect the power adaptor in a vertical or floor mount position only. The adapter's prong is not designed to hold the weight of unit, so do not connect it to any ceiling, under-the-table, or cabinet outlets. Otherwise, the adaptor may not properly connect to the mains.

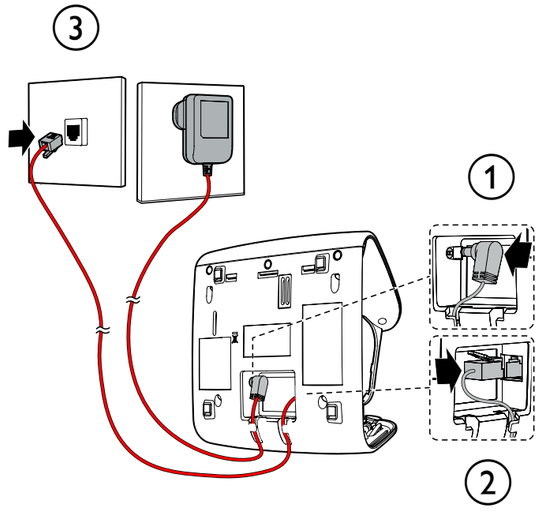

Connect the charger

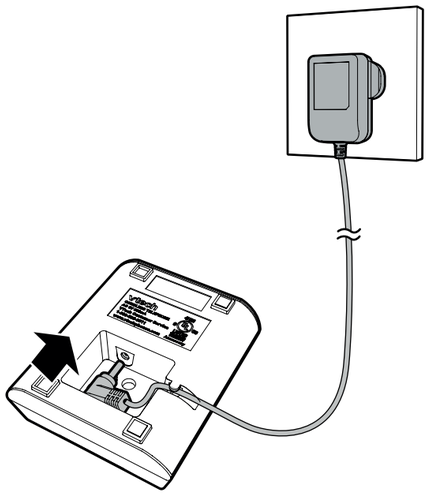

LS1351 charger

Charge the battery

Place the handset in the telephone base to charge.

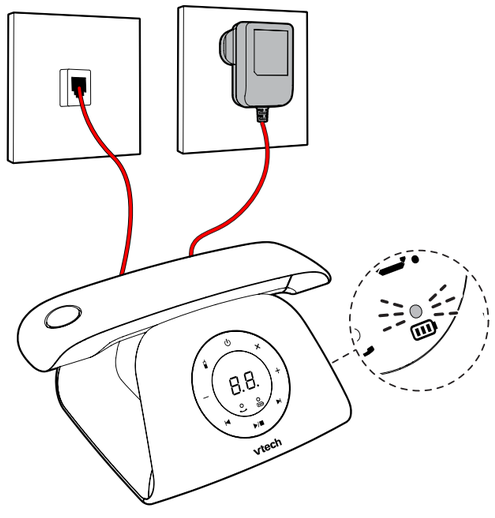

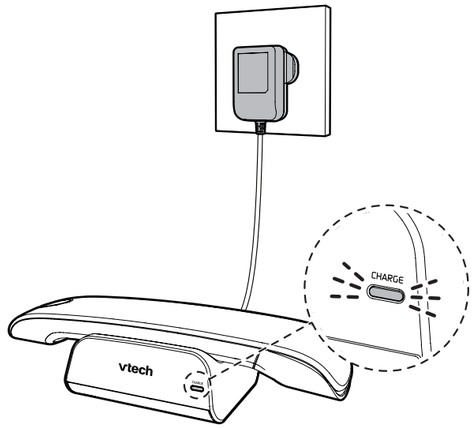

LS1351 charger

Once you have installed the battery, the handset LCD display indicates the battery status (see the table below).

Battery indicators	Battery status	Action
flashes	Battery has no charge or very little charge. The handset cannot be used.	Charge without interruption (at least 30 minutes).
steadily on	Battery has enough charge to be used for a short time.	Charge without interruption (at least 30 minutes).
flashes	Battery charging in progress.	If full battery charging is reached, the icon will stop animation in cycle even the handset is on charging cradle.
steadily on	Battery is charged.	To keep the battery charged, place it in the telephone base or charger when not in use.

When it is fully charged, you can expect the following performance:

Operation	Operating time
While in handset use (talking*)	13 hours
While not in use (standby**)	8 days

* Operating times vary depending on your actual use and the age of the battery.
** Handset is not charging or in use.

NOTES

- Place the handset in the charger will bypass the set date and time, and voice guide.
- For best performance, keep the handset in the charger when not in use.
- The battery is fully charged after 16hours of continuous charging.
- If you place the handset in the charger without plugging in the battery, the screen displays **NO BATTERY**.

Check the battery level

After you have installed the battery, check the battery level on the handset screen.

- If the battery icon is or flashes, then go to **Set the date and time**.
- If the screen is blank, or flashes, then the battery needs to be charged. Go to **Charge the battery** before you do any setting or operation.

Check for dial tone

Press . If you can hear a dial tone, the installation is successful.

If you do not hear a dial tone

- Make sure the installation procedures described above are properly done.
- It may be a wiring problem. If you have changed your telephone service to digital service from a cable company or a VoIP service provider, the telephone line may need to be rewired to allow all existing telephone jacks to work. Contact your cable/VoIP service provider for more information.

Set date and time

After you install your telephone or power returns following a power outage and battery depletion, the handset will prompt you to set the date and time.

1. Use the dialing keys (0-9) to enter the month (**MM**), date (**DD**) and year (**YY**). Then press ⌯/OK.
2. Use the dialing keys (**0-9**) to enter the hour (**HH**) and minute (**MM**). Then press ▼ or ▲ to choose AM or PM.
3. Press ⌯/OK to save.

NOTE

- If you want to skip this, press ⏻.

Operating range

When the handset is out of range, the handset displays **Out of range** or **no pwr at base**.

If there is a call while the handset is out of range, it may not ring, or if it does ring, the call may not connect well when you press 📞. Move closer to the telephone base, and then press 📞 to answer the call. If the handset moves out of range during a telephone conversation, there may be interference. To improve reception, move closer to the telephone base.

Handset Overview

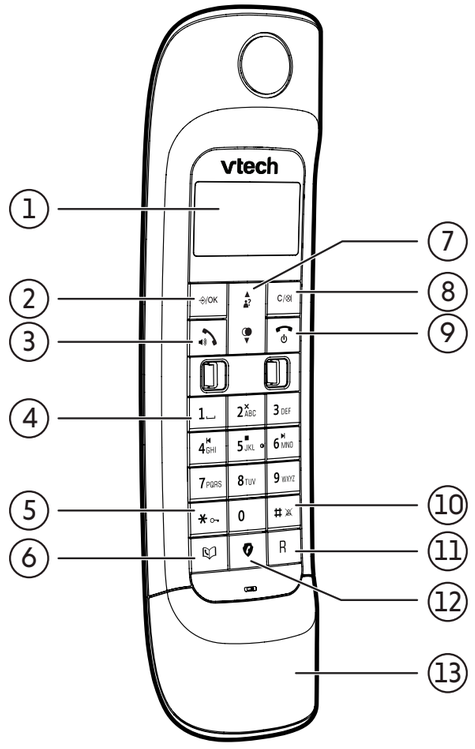

1	**LCD display**	
2	⌯/OK	• Press to display the menu. • Once in the menu, press to select an item or save an entry or setting.
3	📞	• Press to make or answer a call using the handset. • Press to turn on the handset speakerphone, press again to resume normal handset use.
4	1 ␣	• Enter space character during text editing.
4	2 ABC	• Delete messages in the answering machine.
4	4 GHI	• Repeat current message during message playback. • Press twice to skip to previous message.
4	5 JKL	• Stop message playback.
4	6 MNO	• Forward current message during message playback. • Skip to next message.
5	✱	• Press and hold to lock the keypad and again to unlock it.
6	📖	• Press to review the phonebook.
7	▲	• Press to review the caller ID log when the telephone is not in use. • Press to scroll up while in a menu. • Press to increase the listening volume when on a call, or increase the message playback volume. • While entering names or numbers, press to move the cursor to the left.
7	▼	• Press to review the redial list when the telephone is not in use. • Press to scroll down while in a menu. • Press to decrease the listening volume when on a call, or decrease the message playback volume. • While entering names or numbers, press to move the cursor to the right.
8	C/⊗	• During a call, press to mute/unmute the microphone. • When the handset is ringing, press to mute the ringer temporarily. • Press to initiate an intercom call when the handset is not in use. • Delete digits while predialing.
9	⏻	• Hang up a call. • Return to the previous menu or idle mode without making changes. • Silence the handset ringer temporarily while the phone is ringing.
10	#	• Press and hold to set and turn the ringer on/off.
11	R	• Use as a flash during call.
12	🛡	• Enter to call blocker menu. • Review the Black list. • Set the block modes. • Select the call types to block.
13	**Battery compartment cover**	

Handset display icons overview

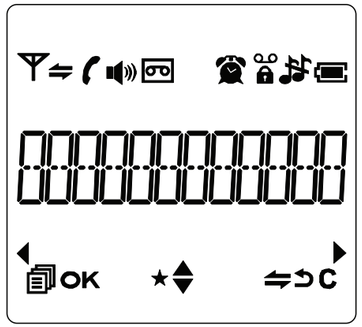

	• The battery is low and needs charging.
	• On when the battery is fully charged. • Flashes when the battery is charging.
	• Handset ringer is off.
	• On when there are new and unread voicemail messages.
	• Keypad lock is on.
	• Alarm alert is on.
	• Steadily ON: When answering system is on. • Flash: When new TAM message is received.
	• Speakerphone is on.
	• Line is in use. • Flash when there is an incoming call.
	• On when intercom call is connected. • Flashes when an incoming internal call.

	• On when the handset is within the range of the base. • Flashes when the handset is in marginal range to the base. • Off when the handset is out of the coverage range.
	• More characters before and after the text currently displayed.
	When displays: • Press ⇥/OK to select menu options.
OK	When displays: • Press ⇥/OK to select/ confirm/save the current selection.
★	• On when new call is received.
	• More menu items existed before and after the current list.
	When displays: • Press C/⊗ to make Intercom call when idle.
	When displays: • Press C/⊗ to return to previous menu level. • Press C/⊗ to cancel the current action.
C	When displays: • Press C/⊗ to clear a character or stop the alarm. • Press C/⊗ to mute/unmute during a call.

Telephone base Overview

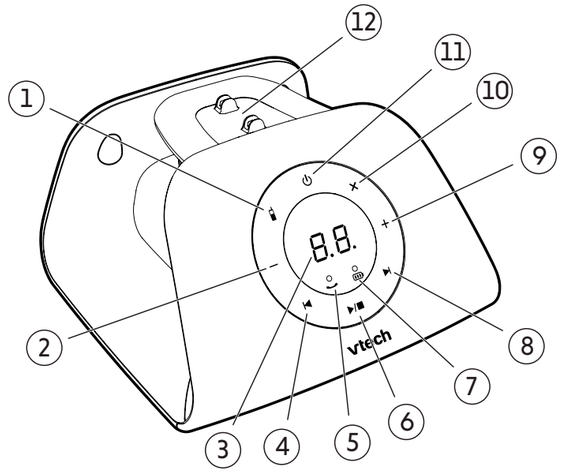

1		Press to page all handsets.
2	—	Decrease the base volume.
3	**LCD Window**	Show number of messages recorded in the answering system.
4		Reverse/ previous message.
5	**IN USE LED**	• On when the handset is in use, or when the answering system is answering an incoming call. • Flashes when another telephone is in use on the same line.
6	▶/■	• Play message. • Stop message.
7	light	On when the handset battery is recharging.
8	▶|	Fast forward/ next message.
9	+	Increase the base volume.
10	✕	Delete message.
11	⏻	Power on/ off the answering system.
12	**Charging pole**	

Charger Overview

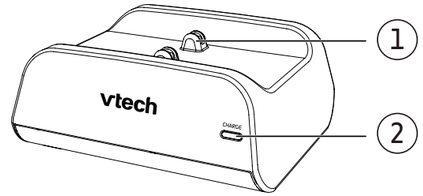

LS1351

1	**Charging pole**	
2	**CHARGE** light	On when the handset battery is recharging.

Menu navigation

In idle mode

1. Press ⇥/OK.
2. Press ▲/▼ of ▲ ▼ to scroll to a menu option.
3. Press ⇥/OK to select.

- You can also press ⏻ to return to previous menu.
- Press and hold ⏻ to return to idle mode.

Call list	Phonebook
Under a selected Call list entry • ADD TO PB • ADD TO BLIST • DELETE • DELETE ALL • DETAILS	• ALL CONTACTS • VIP Under a selected Phonebook entry: • ADD • ADD TO VIP/ DEL FROM VIP • VIEW • EDIT • DELETE • DELETE ALL • PB STATUS
Call blocker	**BS settings**

• BLACKLIST
• SETTINGS
  • BLOCK MODE
  • CALL TYPE
	• BS RINGER
	• RING VOLUME
	• DELETE HS
	• DIAL MODE
	• FLASH TIME
	• CHANGE PIN
	• ECO RANGE
	• FULL ECO

HS settings	**Registration**
• ALARM • RING SETUP • TONE SETUP • LANGUAGE • RENAME HS • HS DISPLAY • AUTO ANSWER • DATE & TIME • SELECT BASE	• BASE 1 ✱ • BASE 2 • BASE 3 • BASE 4
Default	**Ans. Machine**
• PIN?	• MSG PLAYBACK • DELETE ALL • MEMO • TAM ON/OFF • TAM SETTINGS

Make, answer or end a call

Predial a call

1. Enter the telephone number.
   - Press C/⊗ to make corrections.
2. Press 📞 to dial.

Answer a call

Using a cordless handset

- Press 📞, or
- Lift the handset to answer if **AUTO ANSWER** is on.

End a call

Using a cordless handset

- Press ⏻ or place the handset in the handset charger.

Turn the handset ringer on/off

- Press and hold # ⊠.

Turn the keypad lock on/off

- Press and hold ✱ ⊶.

Share call

You can use two cordless handsets at a time on an outside call.

To make a 3-way conversation

1. Press ⇥/OK on the handset during a call.
2. Press ▼/▲ to select **INTERCOM**.
3. Press 📞 to answer call on desination handset.
4. Press and hold ✱ ⊶ on the initiating handset.
   - **CONFERENCE** displays.

Adjust listening volume

To adjust the listening volume on a cordless handset

- During a call, press ▼/▲.

NOTES

- The handset and speakerphone volume settings are independent.
- When the volume reaches the minimum or maximum setting, you hear two beeps.

Call waiting

When you subscribe to call waiting service with your telephone service provider, you hear an alert tone if there is an incoming call while you are on another call.

- Press R to put the current call on hold and take the new call.
- Press R at any time to switch back and forth between calls.

If you also subscribe to caller ID service, it will let you see the name and telephone number of the caller during call waiting.

It may be necessary to change your telephone service to use this feature. Contact your telephone service provider if:

- You have both caller ID and call waiting, but as separate service (you may need to combine these service);
- You have only caller ID service, or only call waiting service; or
- You do not subscribe to caller ID or call waiting services.

There are fees for caller ID services. In addition, services may not be available in all areas.

Redial list

Review a redial list entry

1. Press ▼ to enter the redial list.
2. Press ▼/▲ repeatedly to browse until the desired entry displays.

NOTE

- You hear a double beep when you reach the beginning or end of the redial list.

Store a redial number into the phonebook

1. Press ▼ to enter the redial list.
2. Press ▼/▲ repeatedly to browse until the desired entry displays.
3. Press ⇨/OK and then press ▼/▲ to select **ADD TO PB**.
4. Press ⇨/OK to enter name.
5. Press ⇨/OK to enter number.
6. Press ⇨/OK and then press ▼/▲ to select **MELODY 1** to **MELODY 10**.
7. Press ⇨/OK to confirm.

Redial a call from list

Using a cordless handset

1. Press ▼ to enter the redial list.
2. Press ▼/▲ repeatedly to browse until the desired entry displays.
3. Press 📞 to dial.

NOTE

- If there is no number in the list, the display shows **EMPTY**.

Delete a redial list entry

1. Press ▼ to enter the redial list.
2. Press ▼/▲ repeatedly to browse until the desired entry displays.
3. Press ⇨/OK, and then press ▼/▲ to select **DELETE**.
4. Press ⇨/OK twice to confirm.

Delete all redial entries

1. Press ▼ to enter the redial list.
2. Press ▼/▲ repeatedly to browse until the desired entry displays.
3. Press ⇨/OK, and then press ▼/▲ to select **DELETE ALL**.
4. Press ⇨/OK twice to confirm.

Find handset

This feature helps you find all system handsets.

CAUTIONS

- Do not press and hold 📟 for more than four seconds. It may lead to handset deregistration.
- If the handset displays **To register HS...** and **...see manual**, refer to **Frequent asked questions** to register the handset back to the telephone base.

To start paging

Press 📟 on the telephone base.

- All idle handsets ring and display **PAGING**.

NOTE

- Paging tone continues on the other handset.

To end paging

- Press 📟 again on the telephone base;
- Press 📞, C/⊗, ⏻ on the handset; **or**
- Place the handset in the handset base / charger.

NOTE

- Paging tone stops when paging stops.

Use the phone menu

1. Press ⊕/OK when the phone is not in use.
2. Press ▼/▲ until the screen displays the desired feature menu.
3. Press ⊕/OK to select and enter the menu.

- To return to the previous menu, press C/⊗ on the phone.
- To return to idle mode, press and hold C/⊗ on the phone.

Phonebook

The phonebook can store up to 100 entries, and these entries are shared with the Call block list. Each entry may consist of a telephone number up to 24 digits, and a name up to 12 characters.

Add a phonebook entry

1. Press ⊕/OK, and then press ▼/▲ to choose **PHONEBOOK**. Press ⊕/OK to confirm.
   - **ALL CONTACTS** displays. Press ⊕/OK to select.
   - If there is no entry in the list, the display shows **EMPTY**.
2. Press ⊕/OK.
   - **ADD** displays.
3. Press ⊕/OK to add entry.
   - **NAME** displays. Press ⊕/OK to select.
4. Enter the name of the phonebook entry.
   - Press ⊕/OK to confirm.
   - Press C/⊗ to delete.
   - **NUMBER** displays.
5. Press ⊕/OK, and then enter the telephone number of the entry.
   - Press ⊕/OK to confirm.
   - Press C/⊗ to delete.
   - **MELODY 1** displays. Press ▼/▲ to select your preferred ringtone from **MELODY 1** to **MELODY 10**.
6. Press ⊕/OK to confirm the entry.
   - Press C/⊗ to delete.

Review the phonebook entries

Entries are sorted alphabetically.

1. Press 📖 when the cordless handset is not in use.
   - The screen displays the first entry in the phonebook.
2. Press ▼/▲ to browse through the phonebook, or use the dialing keys to start a name search.

-OR-

1. Press ⊕/OK when the phone is not in use.
2. Press ▼/▲ to choose **PHONEBOOK**, and then press ⊕/OK to select.
   - **ALL CONTACTS** displays. Press ⊕/OK to select.
   - The screen displays the first entry in the phonebook.
   - Press ▼/▲ to choose browse through the phonebook.

NOTES

- If the telephone number in the phonebook exceeds 12 digits, ▶ appears on the display instead of ⮌. Press ▼ to select ▶ to show the remaining numbers.
- You hear a double beep when you reach the beginning or end of the directory.

Check number of phonebook entry used

1. Press 📖 when the cordless handset is not in use.
2. Press ⊕/OK and then ▼/▲ to choose **PB STATUS**.
3. Press ⊕/OK again to select.

-OR-

1. Press ⊕/OK when the phone is not in use.
2. Press ▼/▲ to choose **PHONEBOOK**, and then press ⊕/OK to select.
   - **ALL CONTACTS** displays.
3. Press ⊕/OK and then ▼/▲ to choose **PB STATUS**.
4. Press ⊕/OK again to select.
   - e.g. **09/30 USED** displays.

Dial a phonebook entry

1. Search for the desired entry in the phonebook (see **Review the phonebook entries**).
2. Press to dial.

Edit a phonebook entry

1. Search for the desired entry in the phonebook (see **Review the phonebook entries**).
2. When the desired entry displays, press /OK to select.
   - **ADD** displays.
3. Press ▼/▲ to select **EDIT**, and then press /OK to select.
   - Press C/⊗ to delete the name and number.
   - Re-enter new name and number and the ringer melody.
   - Press /OK to save.
   - You hear a confirmation tone.

Delete a phonebook entry/ all entries

1. Search for the desired entry in the phonebook (see **Review the phonebook entries**).
2. When the desired entry displays, press /OK to select.
   - **ADD** displays.
3. Press ▼/▲ to select **DELETE**, and then press /OK to select and confirm.
   - The entry is deleted, and you hear a confirmation tone.

NOTE

- If you want to delete all phonebook entries, press ▼/▲ to select **DELETE ALL** instead of **DELETE**.

Add a phonebook entry to white list

1. Search for the desired entry in the phonebook (see **Review the phonebook entries**).
2. When the desired entry displays, press /OK to select.
   - **ADD** displays.
3. Press ▼/▲ to select **ADD TO WLIST**, and then press /OK to select.
   - displays next to the entry.
   - You hear a confirmation tone.

Caller ID

This feature is available if you have subscribed to the Caller ID service from your local service provider telephone company.

Review the caller ID log

Review the caller ID log to find out who called, to return the call, or to copy the caller's name and number into your phonebook.

1. Press when the phone is not in use.
   - The screen displays the first entry in the caller ID log.
2. Press ▼/▲ to browse.

Save a caller ID log entry to the phonebook

1. Search for the desired caller ID log entry (see **Review the caller ID log**).
2. When the desired entry displays, press /OK to select.
   - The screen displays **ADD TO PB**.
3. Press /OK to select.
   - The screen displays **NAME**.
4. Press /OK and use dialing keys to enter name. Press /OK to save.
   - The number displays.
   - Use the dialing keys to edit the number, if necessary.
5. Press /OK to save.
   - **MELODY 1** displays.
6. Press ▼/▲ to select your preferred ringtone from **MELODY 1** to **MELODY 10**.
7. Press /OK to save.
   - You hear a confirmation tone.

While entering names and numbers

- Press ▼/▲ to move the cursor to the left or right.
- Press C/⊗ to erase a digit.
- Press and hold C/⊗ to erase all digits.
- Press 1 to add a space.

Save a caller ID log entry to blacklist

1. Search for the desired caller ID log entry (see **Review the caller ID log**).
2. When the desired entry displays, press /OK to select.
   - The screen displays **ADD TO BLIST**.
3. Press /OK to select.
   - The screen displays **NAME**.
4. Press /OK and use dialing keys to enter name. Press /OK to save.
   - The number displays.
   - Use the dialing keys to edit the number, if necessary.
   - You hear a confirmation tone.

Dial a caller ID log entry

1. Search for the desired caller ID log entry (see **Review the caller ID log**).
2. When the desired entry displays, press to dial.

Delete a caller ID entry

1. Search for the desired caller ID log entry (see **Review the caller ID log**).
2. When the desired entry displays, press ⇨/OK to select.
   - Press ▼/▲ to until the screen displays **DELETE**. Press ⇨/OK to select.
   - The entry is deleted, and you hear a confirmation tone.

NOTE

- If you want to delete all caller ID entries, press ▼/▲ to select **DELETE ALL** instead of **DELETE**.

Block unknown calls

You can block all incoming calls with unknown numbers automatically.

1. Press ⇨/OK when the phone is not in use.
2. Press ▼/▲ to choose **CALL BLOCKER**, then press ⇨/OK to select.
3. Press ▼/▲ to choose **SETTINGS**, then press ⇨/OK.
   - There are 2 settings: **BLOCK MODE** and **CALL TYPE**.

Block mode	Call type
• **OFF** • Block feature is off. All calls ring normally.	• **WITHHELD** (Withheld number)
• **BLOCK ALL** • No ring for all calls.	• **INTERNAT'L** (International number)
• **ALLOW WLIST** • Ring for those numbers in the White List.	• **UNAVAILABLE** (Unavailable number)
• **BLOCK BLIST** • Ring for all calls except numbers in the Black List.	• **PAYPHONE** (Payphone number)

4. Press ▼/▲ to choose **CALL TYPE**, and then press ⇨/OK to select.
5. Press ▼/▲ to choose **UNAVAILABLE**, and then press ⇨/OK to select.
   - You hear a confirmation tone.

Call block

If you subscribe to caller ID service, you can set the telephone to block unknown calls and certain undesired calls. The call block list can store up to 100 entries, and these entries are shared with the Phonebook.

Add a call block entry

1. Press ⇨/OK when the phone is not in use.
2. Press ▼/▲ to choose **CALL BLOCKER**, then press ⇨/OK to select.
   - **BLACK LIST** displays.
3. Press ⇨/OK and the first entry in the black list/ call block list displays.
4. Press ⇨/OK twice.
   - **ADD** displays.
5. Press ⇨/OK .
   - **NAME** displays and press ⇨/OK.
6. Use the dialing keys to enter a name.
   - Press ⇨/OK to save.
   - **NUMBER** displays.
7. Press ⇨/OK, and then use the dialing keys to enter a number (up to 24 digits).
8. Press ⇨/OK to save.
   - You hear a confirmation tone.
   - The screen returns to the previous menu.

While entering names and numbers

- Press ▼/▲ to move the cursor to the left or right.
- Press C/⊗ on the cordless handset to erase a digit.
- Press and hold C/⊗ to erase all digits.
- Press 1␣ to add a space.

Review call block list

1. Press ⇨/OK when the phone is not in use.
2. Press ▼/▲ to choose **CALL BLOCKER**, then press ⇨/OK to select.
   - **BLACK LIST** displays.
3. Press ⇨/OK and the first entry in the black list/ call block list displays.
4. Press ▼/▲ to browse through the list.
   - The screen displays **EMPTY** if there are no block entries.

Edit a call block entry

1. Search for the desired call block entry (see **Review a call block list**).
2. When the desired entry displays, press ⊕/OK to select.
   - The screen displays **ADD**.
3. Press ▼/▲ to scroll to **EDIT**. Press ⊕/OK to select.
   - Press ▼/▲ to move the cursor to the left or right.
   - Press C/⊗ to delete the name and number.
   - Press and hold C/⊗ to erase all digits.
   - Press 1␣ to add a space.
4. Use the dialing keys to edit the name and the number, and then press ⊕/OK to save.

Delete a call block entry

1. Search for the desired call block entry (see **Review a call block list**).
2. When the desired entry displays, press ⊕/OK to select.
   - The screen displays **ADD**.
3. Press ▼/▲ to scroll to **DELETE**. Press ⊕/OK to select.
   - You hear a confirmation tone and the screen displays the next entry.

Retrieve voicemail

When you received a voicemail, the handset displays **New voicemail** and/or **مص**.

To retrieve, you typically dial an access number provided by your telephone service provider, and then enter a security code. Contact your telephone service provider for instructions on how to configure the voicemail settings and listen to messages.

NOTE

- After you have listened to all new voicemail messages, the indicators on the screen turn off automatically.

Answering system

Message playback

If you have new messages, the telephone plays only the new messages (oldest first). If there are no new messages, the telephone plays back all messages (oldest first).
When playback begins, you hear the total number of messages followed by the date and time of the message. After the last message, the telephone announces, *"End of messages."*

NOTE

- Make sure you **Set date and time** correctly.

1. Press ⊕/OK when the phone is not in use.
2. Press ▼/▲ to scroll to **ANS. MACHINE**, and then press ⊕/OK to select.
3. Press ▼/▲ to scroll to **MSG PLAYBACK**, and press ⊕/OK to select.
   - If there is no message, the the display shows **TAM EMPTY** and returns to previous menu option
   - If there is a message, the displays shows the date and time (10/21 11-05A), i.e. on October 21st and at 11:05 am.
   - Press ⊕/OK to control the playback.

The first received message will play first, while the new voice message is indicated by a ★ icon. Once the message is played, it will be saved automatically and the ★ icon will disappear.
You can adjust the volume by ▼/▲.

Control the playback

Using the handset:

1. Press ⊕/OK when the phone is not in use.
2. Press ▼/▲ to scroll to **ANS. MACHINE**, and then press ⊕/OK to select.
3. Press ▼/▲ to scroll to **MSG PLAYBACK**, and press ⊕/OK to select.
4. Press ⊕/OK to displays **STOP**, **FORWARD**, **PREVIOUS**, and **DELETE** options.
   - You can also press the keys on your handset to control.
   - **STOP** (5 JKL) - Message playback stops and return to previous menu.
   - **FORWARD** (6 MNO) - Play the next new messsage if available.
   - **PREVIOUS** (4 GHI) - Play the current messsage from the beginning.
   - **DELETE** (2 ABC) - Delete currently play message and continue to play the next message if available. If there is no more message, it will return to previous menu option.

Using the telephone base:

- ▶/■ - Play message or stop message playback.
- ▶| - Play the next new messsage if available.
- |◀ - Play the current messsage from the beginning.
- ✕ - Delete currently play message and continue to play the next message if available.

Delete all messages

If you want to delete all the old messages, you just:

1. Press ⌯/OK when the phone is not in use.
2. Press ▼/▲ to scroll to **ANS. MACHINE**, and then press ⌯/OK to select.
3. Press ▼/▲ to scroll to **DELETE ALL**, and press ⌯/OK.
   - The display shows **CONFIRM?**
4. Select and press ⌯/OK to confirm, or C/⊗ to return to previous menu option.

Record memo

Regardless the answering machine is on or off, you can record memos as reminders for yourself.

1. Press ⌯/OK when the phone is not in use.
2. Press ▼/▲ to scroll to **ANS. MACHINE**, and then press ⌯/OK to select.
3. Press ▼/▲ to scroll to **MEMO**, and press ⌯/OK. It will start recording.
   - Select and press ⌯/OK to stop and save the recording, or
   - Select and press C/⊗ to stop the recording without saving and then to return to previous menu option.

Turn on/ off the answering system

By default, your answering system is ON. You can select to turn on or off the system.

1. Press ⌯/OK when the phone is not in use.
2. Press ▼/▲ to scroll to **ANS. MACHINE**, and then press ⌯/OK to select.
3. Press ▼/▲ to scroll to **TAM ON/OFF**, and press ⌯/OK.
4. Press ▼/▲ to scroll to **ON** or **OFF**.
5. Select **ON** and press ⌯/OK to turn on the system, and the LED on the base will turn on and display the number of messages. The **TAM ON** icon is **ON** in idle.

-OR-

Select **OFF** and press ⌯/OK to turn off the system, and the LED on the base will display **--** and the **TAM ON** icon disappear in idle.

- Press C/⊗ to select ⮌ and return to previous menu option.

Handset settings

Set languages

The LCD language is preset to German. You can select English, French, Italian, Spanish, or Dutch to be used in all screen displays.

1. Press ⌯/OK when the phone is not in use.
2. Press ▼/▲ to choose **HS SETTINGS**, and then press ⌯/OK to select.
   - **ALARM** displays.
3. Press ▼/▲to scroll to **LANGUAGE**.
4. Press ⌯/OK to choose LCD language.
5. Press ▼/▲ to choose English, Français, Italiano, Español or Nederlands, and then press ⌯/OK to select.
   - The screen returns to the previous menu.
   - You hear a confirmation tone.

Set date and time

1. Press ⌯/OK when the phone is not in use.
2. Press ▼/▲ to choose **HS SETTINGS**, and then press ⌯/OK to select.
3. Press ▼/▲to scroll to **DATE & TIME** and then press ⌯/OK to select.
4. Press ▼/▲to scroll to
   - **DATE FORMAT**
   - **TIME FORMAT**
   - **SET TIME**
   - **SET DATE**

Set date format

1. Follow **Set date and time** and reach **DATE FORMAT**. Press ⊕/OK to select.
2. Press ▼/▲ to choose **DD-MM-YY** or **MM-DD-YY** format.
3. Press ⊕/OK to save.

Set time format

1. Follow **Set date and time** and reach **TIME FORMAT**. Press ⊕/OK to select.
2. Press ▼/▲ to choose **12HR** or **24HR** format.
3. Press ⊕/OK to save.

Set date

1. Follow **Set date and time** and reach **SET DATE**. Press ⊕/OK to select.
2. Use the dialing keys (**0-9**) to enter the date (**DD**), month (**MM**), and year (**YY**). Then, press ⊕/OK to save.

Set time

1. Follow **Set date and time** and reach **SET TIME**. Press ⊕/OK to select.
2. Use the dialing keys (**0-9**) to enter the hour (**HH**) and minute (**MM**).
3. Enter the time in 24HR format, and it will auto choose **AM** or **PM**.
4. Press ⊕/OK to save.
   - The screen returns to the previous menu.
   - You hear a confirmation tone.

Ringer

1. Press ⊕/OK when the phone is not in use.
2. Press ▼/▲ to choose **HS SETTINGS**, and then press ⊕/OK to select.
3. Press ▼/▲ to choose **RING SETUP**, and then press ⊕/OK to select. There are 3 options:
   - **INT, RING** - Internal call ringtone
   - **EXT, RING** - External call ringtone
   - **RING VOLUME** - Ringer volume

Set ringer melody

You can choose from different ringer melody for each handset and the telephone base.

1. Follow **Ringer** and reach **RING SETUP** option.
2. Press ▼/▲ to choose setting internal call ringtone or external call ringtone.
3. Press ⊕/OK.
   - **MELODY 1** displays.
   - ⚒ displays next to the selection.
4. Press ▼/▲ to select your preferred ringtone from **MELODY 1** to **MELODY 10**.
5. Press ⊕/OK to save.
   - You hear a confirmation tone.

NOTE

- If you turn off the ringer volume, you will not hear ringer tone samples.

Set ringer volume

You can set the ringer volume or turn the ringer off on each handset.
When the ringer is off, ♫ appears on the screen.

1. Follow **Ringer** and reach **RING SETUP** option.
2. Press ▼/▲ to choose **RING VOLUME**, and then press ⊕/OK to select.
3. Press ▼/▲ to select from **VOLUME OFF** to **VOLUME 5**, and then press ⊕/OK to select and save.
   - ⚒ displays next to the selection.
   - You hear a confirmation tone.

NOTE

- If the ringer volume is set to off, that handset is silenced for all incoming calls except paging tone.

Tone settings

Set key tone on or off

You can turn the key tone on or off for each handset and the telephone base. If you turn the key tone off, there are no beeps when you press the keys.

1. Press ⊕/OK when the phone is not in use.
2. Press ▼/▲ to choose **HS SETTINGS**, and then press ⊕/OK to select.
3. Press ▼/▲ to choose **TONE SETUP**, and then press ⊕/OK to select.
   - **KEY TONE** displays.
4. Press ⊕/OK to select.
5. Press ▼/▲ to choose **ON** or **OFF**.
6. Press ⊕/OK to save.
   - The screen returns to the previous menu.
   - You hear a confirmation tone.

Set alert tones on or off

1. Press ⊕/OK when the phone is not in use.
2. Press ▼/▲ to choose **HS SETTINGS**, and then press ⊕/OK to select.
3. Press ▼/▲ to choose **TONE SETUP**, and then press ⊕/OK to select.
4. Press ▼/▲ to choose **BATTERY TONE** or **OUT OF RANGE**.
5. Press ⊕/OK to select.
6. Press ▼/▲ to choose **ON** or **OFF**.
7. Press ⊕/OK to save.

Alarm

Set alarm on or off and alarm time

You can set the ALARM alert with handset.

1. Press ⊕/OK when the phone is not in use.
2. Press ▼/▲ to choose **HS SETTINGS**, and then press ⊕/OK to select.
3. Press ▼/▲ to choose **ALARM**, and then press ⊕/OK to select.
4. Press ▼/▲ to choose **ON** or **OFF**.
5. Press ⊕/OK to select.
   - The screen displays 00-00.
6. Enter the alarm time (24-hour setting).
   - Enter 05:25 for 5:25am and 15:25 for 3:25pm.
   - The screen displays SNOOZE, and press ⊕/OK to select it.
7. Press ▼/▲ to choose **ON** or **OFF**.
   - The screen returns to the previous menu. You hear a confirmation tone.

Configure handset display

Rename handset

You can rename the handset for your easy reference with the base.

1. Press ⊕/OK when the phone is not in use.
2. Press ▼/▲ to choose **HS SETTINGS**, and then press ⊕/OK to select.
3. Press ▼/▲ to choose **RENAME HS**, and then press ⊕/OK to select.
   - **HANDSET** _ displays; _ cursor flashes and you can rename the handset.
   - Press C/⊗| to delete and the keypad to enter.

Display handset name or time

You can choose to display the handset name or time.

1. Press ⊕/OK when the phone is not in use.
2. Press ▼/▲ to choose **HS SETTINGS**, and then press ⊕/OK to select.
3. Press ▼/▲ to choose **HS DISPLAY**, and then press ⊕/OK to select.
4. Press ▼/▲ to select **HANDSET NAME** or **TIME**.
5. Press ⊕/OK to save.
   - Press C/⊗| to select ↩ and return to previous menu.

Set auto answer

You can set your handset to auto answer the call once you lift it from the base.

1. Press ⊕/OK when the phone is not in use.
2. Press ▼/▲ to choose **HS SETTINGS**, and then press ⊕/OK to select.
3. Press ▼/▲ to choose **AUTO ANSWER**, and then press ⊕/OK to select.
4. Press ▼/▲ to choose **ON** or **OFF**.
5. Press ⊕/OK to save.
   - Press C/⊗| to select ↩ and return to previous menu.

Select base

You can select the handset to register to a different base if you have more than one LS1350/LS1351 base.

1. Press ⊕/OK when the phone is not in use.
2. Press ▼/▲ to choose **HS SETTINGS**, and then press ⊕/OK to select.
3. Press ▼/▲ to choose **SELECT BASE**, and then press ⊕/OK to select.
   - **BASE 1** ✕ displays.
   - ✕ next to the base name means it is currently registered to this base.
   - For example, if you have 2 bases, you can press ▼/▲ to choose **BASE 1** or **BASE 2**.
4. Press ⊕/OK to confirm.
   - **PLEASE WAIT** flashes, and then **BS SELECTED** displays.
   - You hear a confirmation tone.

Base settings

Delete handset

1. Press ⊕/OK when the phone is not in use.
2. Press ▼/▲ to choose **BS SETTINGS**, and then press ⊕/OK to select.
3. Press ▼/▲ to choose **DELETE HS**, and then press ⊕/OK to select.
   - **PIN? - - - -** displays; **- - - -** cursor flashes.
   - Default 4-digit PIN is **0000**.
   - Press C/⊗| to delete.
   - The PIN will be masked as ✱✱✱✱.
4. Press ⊕/OK to confirm.
   - Return to **BS SETTINGS** menu.
   - The deleted handset will be removed from the registered handsets list, and the antenna icon will disappear. **REGISTER** displays.

NOTE

- If the PIN is incorrect, the screen returns to the previous menu.

Set dial mode

The dial mode is preset to touch-tone dialing. If you have pulse (rotary) service, you need to change the dial mode to pulse dialing before using the telephone to make a call.

1. Press ⊕/OK when the phone is not in use.
2. Press ▼/▲ to choose **BS SETTINGS**, and then press ⊕/OK to select.
3. Press ▼/▲ to choose **DIAL MODE**, and then press ⊕/OK to select.
4. Press ▼/▲ to choose **TONE** or **PULSE**, and then press ⊕/OK to select.
   - ✱ displays next to the selection.
   - The screen returns to the previous menu.
   - You hear a confirmation tone.

Change length of flash time

1. Press ⊕/OK when the phone is not in use.
2. Press ▼/▲ to choose **BS SETTINGS**, and then press ⊕/OK to select.
3. Press ▼/▲ to choose **FLASH TIME**, and then press ⊕/OK to select. There are 3 options:
   - **SHORT**
   - **MEDIUM** ✱ (by default)
   - **LONG**
4. After you have selected, press ⊕/OK to confirm and save.
   - You hear a confirmation tone.

Change the system PIN

1. Press ⊕/OK when the phone is not in use.
2. Press ▼/▲ to choose **BS SETTINGS**, and then press ⊕/OK to select.
3. Press ▼/▲ to choose **CHANGE PIN**, and then press ⊕/OK to select.
   - **OLD PIN? - - - -** displays; **- - - -** cursor flashes.
   - Default 4-digit PIN is **0000**.
   - Press C/⊗| to delete.
   - The PIN will be masked as ✱✱✱✱.
4. Press ⊕/OK to confirm.
   - If the old PIN is correct, it will show **NEW PIN? - - - -** with **- - - -** cursor flashes.
5. Enter the new PIN, and press ⊕/OK.
6. Re-enter the new PIN to double confirm.
7. Press ⊕/OK to save.

ECO range and mode

You can select to save power consumption and provide some reduction in transmission power and range.

Set ECO range

1. Press ⊕/OK when the phone is not in use.
2. Press ▼/▲ to choose **BS SETTINGS**, and then press ⊕/OK to select.
3. Press ▼/▲ to choose **ECO RANGE**, and then press ⊕/OK to select.
4. Press ▼/▲ to choose **HALF RANGE** or **FULL RANGE**, and then press ⊕/OK to select.
   - **FULL RANGE** ✱ is the default setting.

NOTE

- In half ECO range, the transmission range is halved.

Turn on or off Full ECO

1. Press ⊕/OK when the phone is not in use.
2. Press ▼/▲ to choose **BS SETTINGS**, and then press ⊕/OK to select.
3. Press ▼/▲ to choose **FULL ECO**, and then press ⊕/OK to select.
4. Press ▼/▲ to choose **ON** or **OFF**.
   - **OFF** ✱ is the default setting.
5. Press ⊕/OK to save.
   - Press C/⊗| to select ⮌ and return to previous menu.

Register a handset

When your handset is deregistered from the telephone base, follow the steps below to register it back to the telephone base.

1. Remove the handset from the telephone base.
2. Press ⊕/OK when the phone is not in use.
3. Press ▼/▲ to choose **REGISTRATION**, and then press ⊕/OK to select. There are 4 bases to choose from- optional for supporting multiple bases.
   - **BASE 1** ✕ (by default)
   - **BASE 2**
   - **BASE 3**
   - **BASE 4**
4. Press ▼/▲ to choose the base to register. Then, press ⊕/OK to confirm.
   - **PIN? - - - -** displays; **- - - -** cursor flashes.
5. Enter the 4-digit system PIN, and press ⊕/OK. (Default: **0000**)

   Press and hold 📱 at the telephone base for about five seconds until IN USE light turns on.
   - **PLEASE WAIT** displays.
   - **REGISTER!** displays if the handset did not find and register to the base sucessfully.
   - If handset is registered to the base sucessfully, the base will assign next available handset number to the handset automatically.
   - You hear a beep when the registration process completes.
   - The registration process takes about 60 seconds complete.

NOTE

- If your handset is new, make sure you charge it before attempting registration.

Reset phone settings

You can reset your phone to the default settings. After reset, all settings and entries (except phonebook, call list, and redial list) will be deleted.

1. Press ⊕/OK when the phone is not in use.
2. Press ▼/▲ to choose **DEFAULT**, and then press ⊕/OK to select.
   - **PIN? - - - -** displays; **- - - -** cursor flashes.
3. Enter the 4-digit system PIN, and press ⊕/OK. (Default: **0000**)
4. Press ⊕/OK to confirm.

Answering system and settings

Set your built-in answering system

The answering system can record and store up to 99 messages. Each message can be up to three minutes in length. The total storage capacity for the outgoing message, messages and memos is approximately 15 minutes. The actual recording time depends on individual message characteristics.

Your answering system allows you to set your outgoing message, to save and delete messages, activate call screening, to set number of rings before pick up, and to access remotely.

NOTE

- Make sure you **Set date and time** correctly.

Set the answer mode

The answering system has two types of answer mode. One is **ANS & REC**, and the other one is **ANSWER ONLY**.
ANS & REC is the default setting, and it answers the calls and allows callers to leave a message. **ANSWER ONLY**, on the other hand, only answer the calls but it does not allow callers to leave any messages. It will prompt callers to call back later.

1. Press ⊕/OK when the phone is not in use.
2. Press ▼/▲ to scroll to **ANS. MACHINE**, and then press ⊕/OK to select.
3. Press ▼/▲ to scroll to **TAM SETTINGS**, and press ⊕/OK to select.
4. Press ▼/▲ to scroll to **ANSWER MODE**, and press ⊕/OK to select.
5. Press ▼/▲ to select **ANS & REC** or **ANSWER ONLY**.
6. Press ⊕/OK to confirm.

Select the answering system language

1. Press ⊕/OK when the phone is not in use.
2. Press ▼/▲ to scroll to **ANS. MACHINE**, and then press ⊕/OK to select.
3. Press ▼/▲ to scroll to **TAM SETTINGS**, and press ⊕/OK to select.
4. Press ▼/▲ to scroll to **TAM LANGUAGE**, and press ⊕/OK to select. Select from the following languages:
   - **DEUTSCH**;
   - **FRANCAIS**; and
   - **ENGLISH**.

Default outgoing message

The telephone is preset with a greeting that answers calls with *"Hello, please leave a message after the tone."* You can use this preset outgoing message, or replace it with your own.

Record your own outgoing message

1. Press ⌖/OK when the phone is not in use.
2. Press ▼/▲ to scroll to **ANS. MACHINE**, and then press ⌖/OK to select.
3. Press ▼/▲ to scroll to **TAM SETTINGS**, and press ⌖/OK to select.
4. Press ▼/▲ to scroll to **OGM SETTINGS**, and press ⌖/OK to select.
5. Press ▼/▲ to scroll to **ANS & REC** or **ANSWER ONLY**, and press ⌖/OK to select.
6. Press ▼/▲ to scroll to **RECORD MESS**, and press ⌖/OK to select.
7. During **RECORDING**, select and press ⌖/OK to stop and save the recording and return to previous menu option.
   - Select and press C/⊗| to stop the recording without saving and return to previous menu option.
   - Maximum recording length is 3 minutes.

Play and delete your outgoing message

1. Press ⌖/OK when the phone is not in use.
2. Press ▼/▲ to scroll to **ANS. MACHINE**, and then press ⌖/OK to select.
3. Press ▼/▲ to scroll to **TAM SETTINGS**, and press ⌖/OK to select.
4. Press ▼/▲ to scroll to **OGM SETTINGS**, and press ⌖/OK to select.
5. Press ▼/▲ to scroll to **ANS & REC** or **ANSWER ONLY**, and press ⌖/OK to select.
6. Press ▼/▲ to scroll to **PLAYBACK**, and press ⌖/OK to select.
7. During **PLAYING**, select ⌖/OK to stop the outgoing message playback and return to previous menu option.
   - Press C/⊗| to delete your outgoing message and return to previous menu option.
   - Default outgoing message cannot be deleted.

NOTE

- After you deleted your own recorded outgoing message, the answering system answers calls with the default outgoing message

Options during playback

- Press ▼/▲ on the cordless handset to adjust the listening volume.
- Press 📞 to switch between the speakerphone and handset earpiece.

Set answer delay

Use this feature to set the number of rings for the answering system pick up the incoming call.

1. Press ⌖/OK when the phone is not in use.
2. Press ▼/▲ to scroll to **ANS. MACHINE**, and then press ⌖/OK to select.
3. Press ▼/▲ to scroll to **TAM SETTINGS**, and press ⌖/OK to select.
4. Press ▼/▲ to scroll to **ANSWER DELAY**, and press ⌖/OK to select.
5. Press ▼/▲ to select between **TIME SAVER**, **2 RINGS**, **4 RINGS**, **6 RINGS**, or **8 RINGS**. Press ⌖/OK to save the settings and return to previous menu option.
   - Press C/⊗| to select ⮌ and return to previous menu option without changing and saving.

Set record time

Use this feature to set the message recording time.

1. Press ⌖/OK when the phone is not in use.
2. Press ▼/▲ to scroll to **ANS. MACHINE**, and then press ⌖/OK to select.
3. Press ▼/▲ to scroll to **TAM SETTINGS**, and press ⌖/OK to select.
4. Press ▼/▲ to scroll to **RECORD TIME**, and press ⌖/OK to select.
5. Press ▼/▲ to select between **60S**, **120S**, **180S**, or **UNLIMITED**.
   - Select and press ⌖/OK to save the settings and back to previous menu option.
   - Press C/⊗| to select ⮌ and return to previous menu option without changing and saving.

Turn on or off the call screening

Use this feature to choose whether incoming messages can be heard while they are being recorded.

1. Press ⏎/OK when the phone is not in use.
2. Press ▼/▲ to scroll to **ANS. MACHINE** then press ⏎/OK to select.
3. Press ▼/▲ to scroll to **TAM SETTINGS** then press ⏎/OK to select.
4. Press ▼/▲ to scroll to **BS SCREENING**.
5. Press ▼/▲ to choose **ON** or **OFF**.
6. Press ⏎/OK to save.
   - You hear a confirmation tone.

Turn on/ off remote access

You can turn on or off the remote access feature to access your messages.

1. Press ⏎/OK when the phone is not in use.
2. Press ▼/▲ to scroll to **ANS. MACHINE**, and then press ⏎/OK to select.
3. Press ▼/▲ to scroll to **TAM SETTINGS**, and then press ⏎/OK to select.
4. Press ▼/▲ to scroll to **REMOTE ACC.**, and then press ⏎/OK to select.
5. Press ▼/▲ to select **ON** or **OFF**.
6. Select and press ⏎/OK to save.
   - You hear a confirmation tone.

Change the remote access PIN

You can set your own remote access code. Default PIN is **0000**.

1. Press ⏎/OK when the phone is not in use.
2. Press ▼/▲ to scroll to **ANS. MACHINE**, and then press ⏎/OK to select.
3. Press ▼/▲ to scroll to **TAM SETTINGS**, and then press ⏎/OK to select.
4. Press ▼/▲ to scroll to **CHANGE PIN**, and then press ⏎/OK to select.
   - The display shows **OLD PIN?----**
   - Default PIN is **0000**.
5. Enter your current 4-digit remote access PIN.
   - The PIN is masked as ✱✱✱✱.
6. Press ⏎/OK to enter or C/⊗ to cancel.
   - If you entered the correct current remote access PIN, the display shows **NEW PIN?----**; **- - - -** cursor flashes.
7. Enter your preferred 4-digit new PIN.
   - The PIN is masked as ✱✱✱✱.
   - The PIN must be 4-digit, otherwise, it will not proceed to confirmation page.
8. Re-enter the new PIN in confirm page. Press ⏎/OK to save and confirm.
   - You hear a confirmation tone.

General product care

Taking care of your telephone

Your cordless telephone contains sophisticated electronic parts, so it must be treated with care.

Avoid rough treatment

Place the handset down gently. Save the original packing materials to protect your telephone if you ever need to ship it.

Avoid water

Your telephone can be damaged if it gets wet. Do not use the handset outdoors in the rain, or handle it with wet hands. Do not install the telephone base near a sink, bathtub or shower.

Electrical storms

Electrical storms can sometimes cause power surges harmful to electronic equipment. For your own safety, take caution when using electrical appliances during storms.

Cleaning your telephone

Your telephone has a durable plastic casing that should retain its luster for many years. Clean it only with a dry non-abrasive cloth. Do not use dampened cloth or cleaning solvents of any kind.

Storage

When you are not going to use the telephone for some time, unplug the adapter(s), and remove the rechargeable battery from the handset. Store the telephone base, the handset, the charger(s) and the adapter(s) in a cool and dry place.

Frequently asked questions

Below are the questions most frequently asked about the cordless telephone. If you cannot find the answer to your question, visit our website at www.vtechphones.eu.

My telephone does not work at all.	Make sure the telephone base is installed properly, and battery is installed and charged correctly. For optimum daily performance, return the handset to the telephone base after use.
The display shows No line. I cannot hear the dial tone.	Disconnect the telephone line cord from your telephone and connect it to another telephone. If there is no dial tone on that other telephone either, then the telephone line cord may be defective. Try installing a new telephone line cord.
	If changing the telephone line cord does not help, the wall jack (or the wiring to this wall jack) may be defective. Contact your telephone service provider.
	You may be using a new cable or VoIP service, the existing telephone jacks in your home may no longer work. Contact your service provider for solutions.
I cannot dial out.	Make sure there is a dial tone before dialing. It is normal if the handset takes a second or two to synchronize with the telephone base before producing a dial tone. Wait an extra second before dialing.
	Eliminate any background noise. Mute the handset before dialing, or dial from another room in your home with less background noise.

Go to **www.vtechphones.eu (UK)** for the latest VTech product news.

Specifications are subject to change without notice.
© 2025 VTech Communications, Inc.
All rights reserved. v4. 08/25.

LS1350_LS1351_UK_WEBCIB_v4_250820