Product Model

POW-HVM5.5K-48V

POW-HVM5.5K-48V-P

PowMr

SOLAR INVERTER CHARGER

User Manual

Table Of Contents

ABOUT THIS MANUAL 1
Purpose 1
Scope 1
SAFETY INSTRUCTIONS 1
INTRODUCTION 2
Features 2
Basic System Architecture 2
Product Overview 3
INSTALLATION 4
Unpacking and Inspection 4
Preparation 4
Mounting the Unit 4
Battery Connection 5
AC Input/Output Connection 6
PV Connection 8
Final Assembly 9
Dry Contact Signal 10
OPERATION 11
Power ON/OFF 11
Operation and Display Panel 11
LCD Display Icons 12
LCD Setting 14
Setting for lithium battery 21
Display Setting 24
Operating Mode Description 27
Fault Reference Code 30
Warning Indicator 31
BATTERY EQUALIZATION 32
SPECIFICATIONS 34
Table 1 Line Mode Specifications 34
Table 2 Inverter Mode Specifications 35
Table 3 Charge Mode Specifications 36
Table 4 General Specifications 36
TROUBLE SHOOTING 37
Parallel Installation Guide 38
1. Instruction 38
2. Package Contents 38
3. Mounting the Unit 38
4. Wiring Connection 39
5-1. Parallel Operation in Single phase 40
5-2. Support 3-phase equipment 44
6. PV Connection 50
7. LCD Setting and Display 51
8. Commissioning 52
9. Trouble shooting 53

ABOUT THIS MANUAL

Purpose

This manual describes the assembly, installation, operation and troubleshooting of this unit. Please read this manual carefully before installations and operations. Keep this manual for future reference.

Scope

This manual provides safety and installation guidelines as well as information on tools and wiring.

SAFETY INSTRUCTIONS

WARNING: This chapter contains important safety and operating instructions. Read and keep this manual for future reference.

1. Before using the unit, read all instructions and cautionary markings on the unit, the batteries and all appropriate sections of this manual.
2. **CAUTION** --To reduce risk of injury, charge only deep-cycle lead acid type rechargeable batteries. Other types of batteries may burst, causing personal injury and damage.
3. Do not disassemble the unit. Take it to a qualified service center when service or repair is required. Incorrect re-assembly may result in a risk of electric shock or fire.
4. To reduce risk of electric shock, disconnect all wirings before attempting any maintenance or cleaning. Turning off the unit will not reduce this risk.
5. **CAUTION** – Only qualified personnel can install this device with battery.
6. **NEVER** charge a frozen battery.
7. For optimum operation of this inverter/charger, please follow required spec to select appropriate cable size. It's very important to correctly operate this inverter/charger.
8. Be very cautious when working with metal tools on or around batteries. A potential risk exists to drop a tool to spark or short circuit batteries or other electrical parts and could cause an explosion.
9. Please strictly follow installation procedure when you want to disconnect AC or DC terminals. Please refer to INSTALLATION section of this manual for the details.
10. Fuse is provided as over-current protection for the battery supply.
11. GROUNDING INSTRUCTIONS -This inverter/charger should be connected to a permanent grounded wiring system. Be sure to comply with local requirements and regulation to install this inverter.
12. NEVER cause AC output and DC input short circuited. Do NOT connect to the mains when DC input short circuits.
13. **Warning!!** Only qualified service persons are able to service this device. If errors still persist after following troubleshooting table, please send this inverter/charger back to local dealer or service center for maintenance.

INTRODUCTION

This is a multi-function inverter/charger, combining functions of inverter, MPPT solar charger and battery charger to offer uninterruptible power support with portable size. Its comprehensive LCD display offers user-configurable and easy-accessible button operation such as battery charging current, AC/solar charger priority, and acceptable input voltage based on different applications.

Features

- Pure sine wave inverter
- Inverter running without battery
- Built-in MPPT solar controller
- Configurable input voltage range for home appliances and personal computers via LCD setting
- Configurable battery charging current based on applications via LCD setting
- Configurable AC/Solar Charger priority via LCD setting
- Compatible to mains voltage or generator power
- Auto restart while AC is recovering
- Overload/ Over temperature/ short circuit protection
- Smart battery charger design for optimized battery performance
- Cold start function

Basic System Architecture

The following illustration shows basic application for this inverter/charger. It also includes following devices to have a complete running system:

- Generator or Utility.
- PV modules (option)

Consult with your system integrator for other possible system architectures depending on your requirements. This inverter can power all kinds of appliances in home or office environment, including motor-type appliances such as tube light, fan, refrigerator and air conditioner.

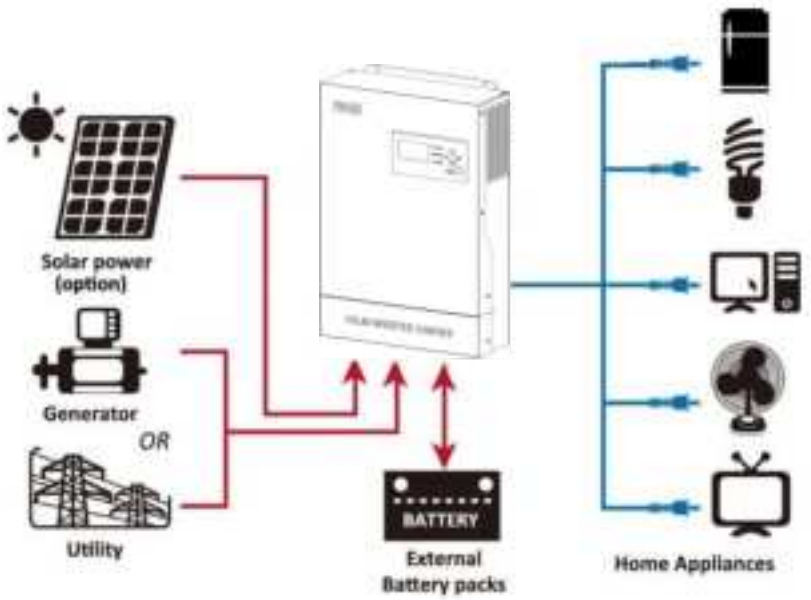

Figure 1 Hybrid Power System

Product Overview

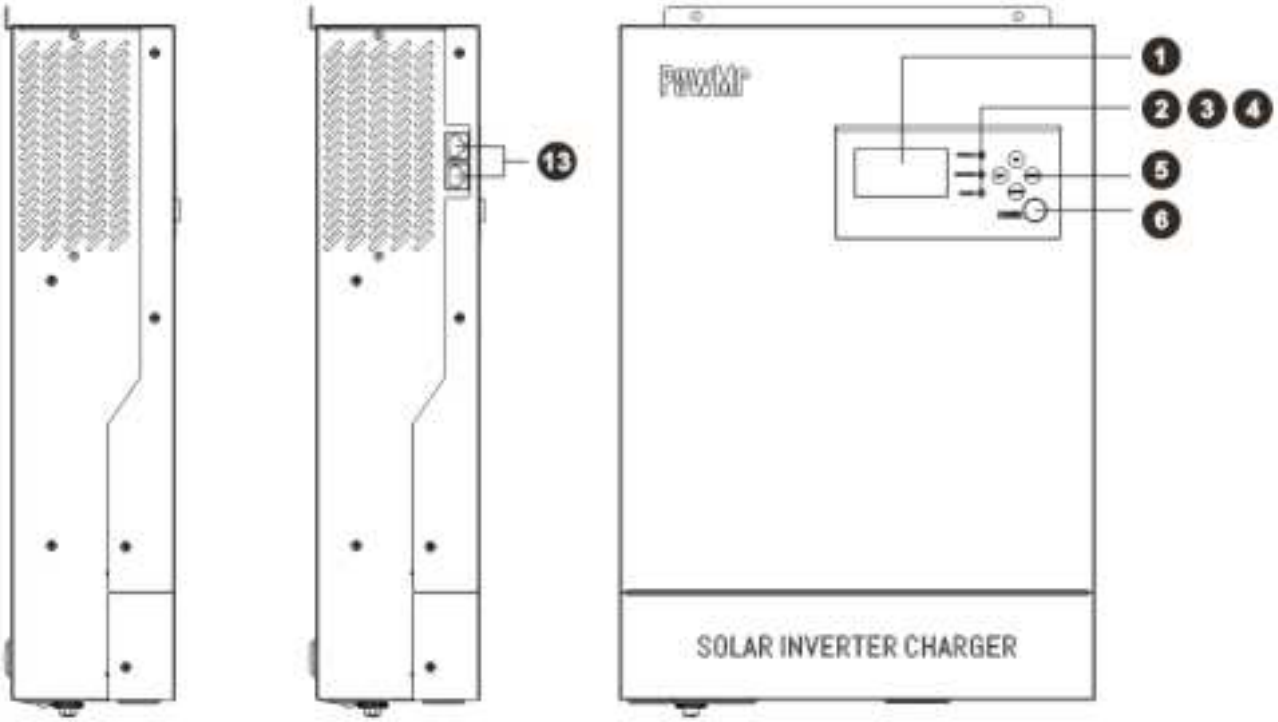

single modle

Parallel modle

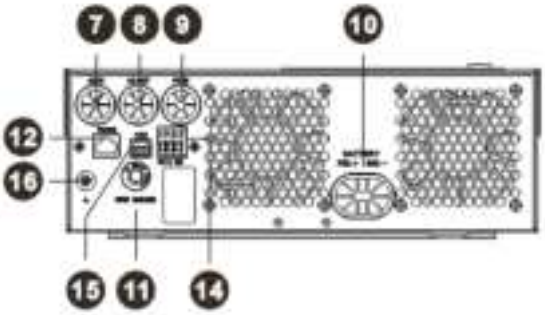

1.LCD display
2.Status indicator
3.Charging indicator
4.Fault indicator
5.Function buttons
6.Power on/off switch
7.AC input
8.AC output
9.PV input
10.Battery input
11.Circuit breaker
12.RS232 communication port
13.Parallel communication port
(only for parallel model)
14.Dry contact (Optional)
15.USB communication port (Optional)
16.Grounding

NOTE: For parallel model installation and operation, please check the parallel installation guide for the details.

INSTALLATION

Unpacking and Inspection

Before installation, please inspect the unit. Be sure that nothing inside the package is damaged. You should have received the following items inside of package:

- The unit x 1
- User manual x 1
- Communication cable x 1

Preparation

Before connecting all wirings, please take off bottom cover by removing two screws as shown below.

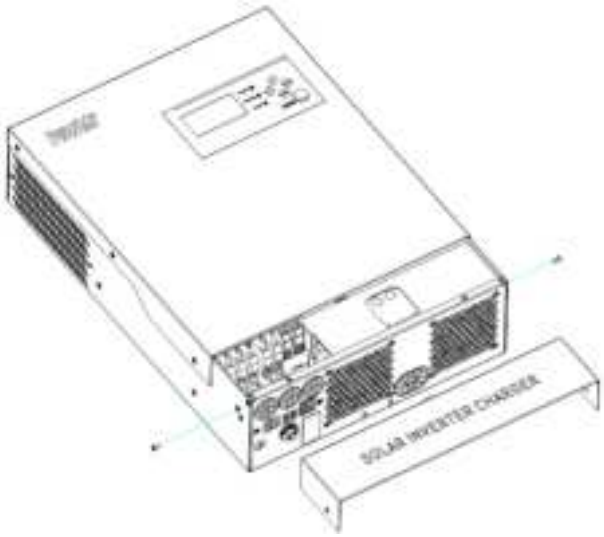

Mounting the Unit

Consider the following points before selecting where to install:

- Do not mount the inverter on flammable construction materials.
- Mount on a solid surface
- Install this inverter at eye level in order to allow the LCD display to be read at all times.
- The ambient temperature should be between 0°C and 55°C to ensure optimal operation.
- The recommended installation position is to be adhered to the wall vertically.
- Be sure to keep other objects and surfaces as shown in the right diagram to guarantee sufficient heat dissipation and to have enough space for removing wires.

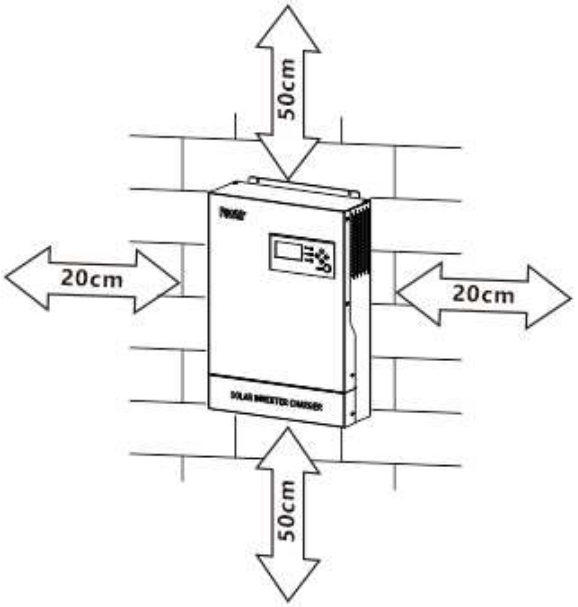

⚠ **SUITABLE FOR MOUNTING ON CONCRETE OR OTHER NON-COMBUSTIBLE SURFACE ONLY.**

Install the unit by screwing three screws. It's recommended to use M4 or M5 screws.

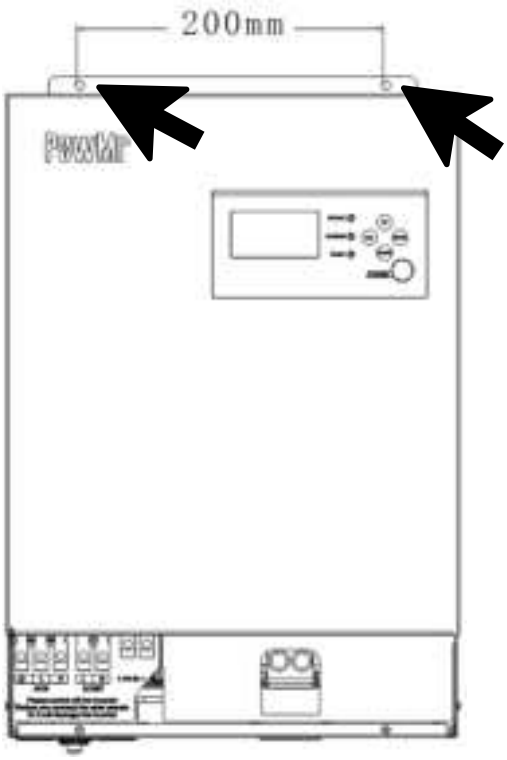

Battery Connection

CAUTION: For safety operation and regulation compliance, it's requested to install a separate DC over-current protector or disconnect device between battery and inverter. It may not be requested to have a disconnect device in some applications, however, it's still requested to have over-current protection installed. Please refer to typical amperage in below table as required fuse or breaker size.

Stripping Length:

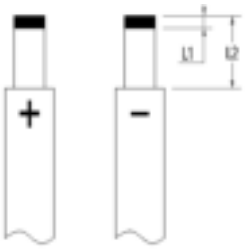

WARNING! All wiring must be performed by a qualified personnel.
WARNING! It's very important for system safety and efficient operation to use appropriate cable for battery connection. To reduce risk of injury, please use the proper recommended cable 、stripping length(L2) and tinning length(L1) as below.

Recommended battery cable 、stripping length (L2) and tinning length(L1):

Model	Maximum Amperage	Battery capacity	Wire Size	Cable mm^2	L1 (mm)	L 2 (mm)	Torque value
1.5KVA	68A	100AH	4AWG	22	3	18	2~ 3 Nm
3.5KVA	137A	100AH	2AWG	38	3	18	2~ 3 Nm
5.5KVA	137A	200AH	2AWG	38	3	18	2~ 3 Nm

Please follow below steps to implement battery connection:

1. Remove insulation sleeve 18 mm for positive and negative cables based on recommended stripping length.
2. Connect all battery packs as units requires. It's suggested to use recommended battery capacity.
3. Insert battery cable flatly into battery connector of inverter and make sure the bolts are tightened with torque of 2-3 Nm. Make sure polarity at both the battery and the inverter/charge is correctly connected and battery cables are tightly screwed to the battery connector.

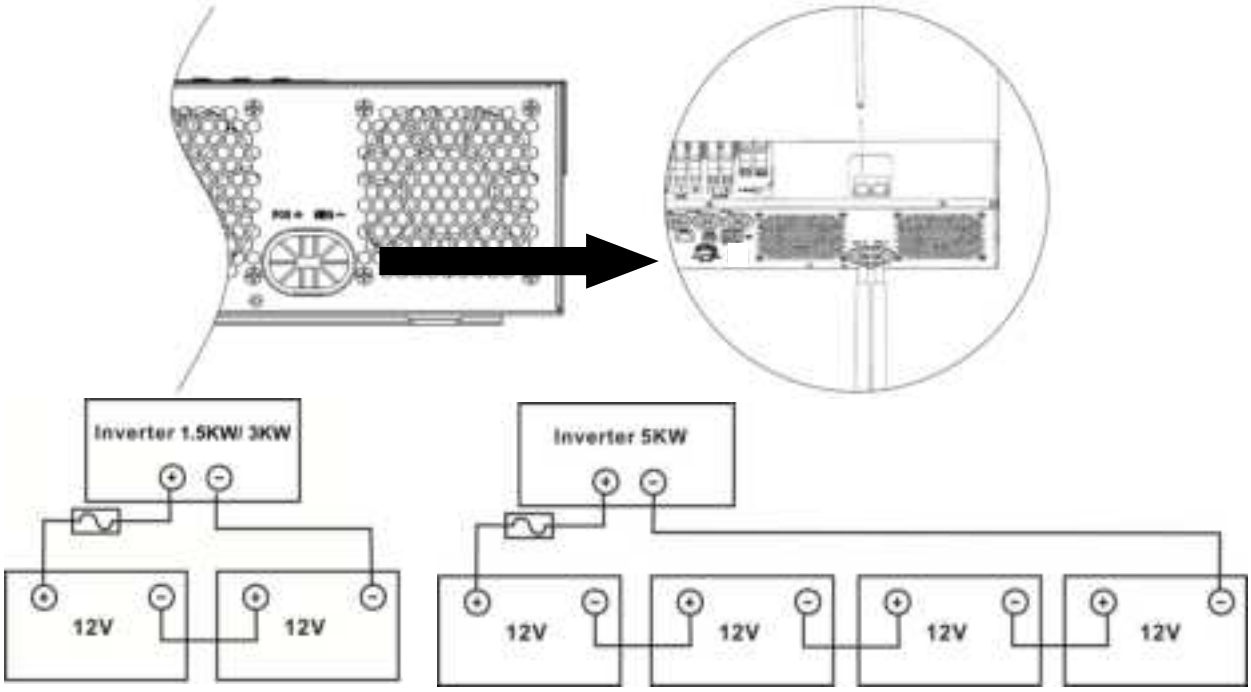

⚠	**WARNING: Shock Hazard** Installation must be performed with care due to high battery voltage in series.

⚠	**CAUTION!!** Do not place anything between the flat part of the inverter terminal Otherwise, overheating may occur. **CAUTION!!** Do not apply anti-oxidant substance on the terminals before terminals are connected tightly. **CAUTION!!** Before making the final DC connection or closing DC breaker/disconnector, be sure positive (+) must be connected to positive (+) and negative (-) must be connected to negative (-).

AC Input/Output Connection

CAUTION!! Before connecting to AC input power source, please install a **separate** AC breaker between inverter and AC input power source. This will ensure the inverter can be securely disconnected during maintenance and fully protected from over current of AC input. The recommended spec of AC breaker is 50A.
CAUTION!! There are two terminal blocks with "IN" and "OUT" markings. Please do NOT mis-connect input and output connectors.

WARNING! All wiring must be performed by a qualified personnel.
WARNING! It's very important for system safety and efficient operation to use appropriate cable for AC input connection. To reduce risk of injury, please use the proper recommended cable size as below.
Suggested cable requirement for AC wires

Model	Gauge	Torque Value
1.5KVA	12AWG	1.2~ 1.4Nm
3.5KVA	10AWG	1.4~ 1.6Nm
5.5KVA	8 AWG	1.4~ 1.6Nm

Please follow below steps to implement AC input/output connection:

1. Before making AC input/output connection, be sure to open DC protector or disconnector first.
2. Remove insulation sleeve 10mm for six conductors. And shorten phase L and neutral conductor N 3 mm.
3. Insert AC input wires according to polarities indicated on terminal block and tighten the terminal screws. Be sure to connect PE protective conductor (⏚) first.

⏚→Ground (yellow-green) L→LINE (brown or black) N→Neutral (blue)

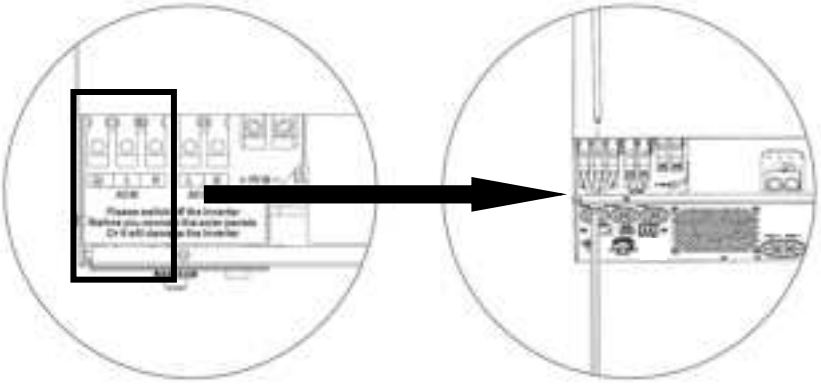

⚠	**WARNING:** Be sure that AC power source is disconnected before attempting to hardwire it to the unit.

4. Then, insert AC output wires according to polarities indicated on terminal block and tighten terminal screws. Be sure to connect PE protective conductor (⏚) first.

   ⏚→Ground (yellow-green)

   L→LINE (brown or black)

   N→Neutral (blue)

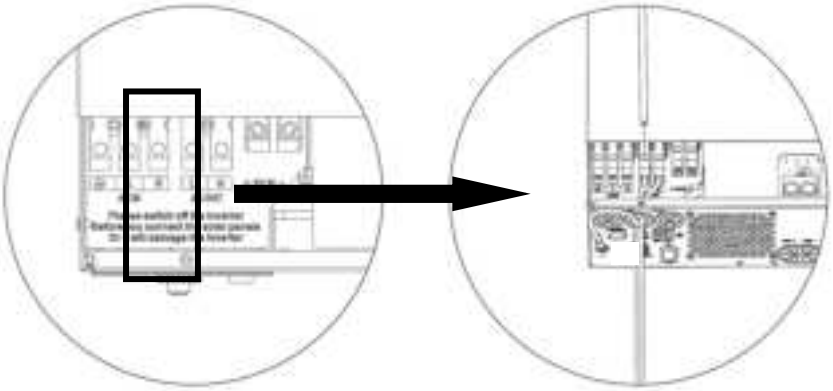

5. Make sure the wires are securely connected.

CAUTION: Important

Be sure to connect AC wires with correct polarity. If L and N wires are connected reversely, it may cause utility short-circuited when these inverters are worked in parallel operation.

CAUTION: Appliances such as air conditioner are required at least 2~3 minutes to restart because it's required to have enough time to balance refrigerant gas inside of circuits. If a power shortage occurs and recovers in a short time, it will cause damage to your connected appliances. To prevent this kind of damage, please check manufacturer of air conditioner if it's equipped with time-delay function before installation. Otherwise, this inverter/charger will trig overload fault and cut off output to protect your appliance but sometimes it still causes internal damage to the air conditioner.

PV Connection

CAUTION: Before connecting to PV modules, please install **separately** a DC circuit breaker between inverter and PV modules.

WARNING! All wiring must be performed by a qualified personnel.
WARNING! It'' very important for system safety and efficient operation to use appropriate cable for PV module connection. To reduce risk of injury, please use the proper recommended cable size as below.

Model	Typical Amperage	Cable Size	Torque
1.5KVA	10A	12 AWG	1.2~1.4 Nm
3.5KVA	15A	12 AWG	1.4~1.6 Nm
5.5KVA	18A	12 AWG	1.4~1.6 Nm

PV Module Selection:
When selecting proper PV modules, please be sure to consider below parameters:
1. Open circuit Voltage (Voc) of PV modules not exceeds max. PV array open circuit voltage of inverter.
2. Open circuit Voltage (Voc) of PV modules should be higher than min. battery voltage.

Solar Charging Mode	
INVERTER MODEL	1.5KVA / 3.5KVA / 5.5KVA
Max. PV Array Open Circuit Voltage	500DC
PV Array MPPT Voltage Range	120VDC~450VDC

Take the 330Wp PV module as an example. After considering above two parameters, the recommended module configurations are listed in the table below.

Solar Panel Spec. (reference) - 330Wp - Vmp: 33.25Vdc - Imp: 9.925A - Voc: 40.35Vdc - Isc: 10.79A - Cells: 60	SOLAR INPUT Min in serial: 6 pcs, max. in serial: 12 pcs	Q'ty of panels	Total input power	Inverter Model
	6 pcs in serial	6 pcs	1980W	1.5KVA/3.5KVA/5.5KVA
	10 pcs in serial	10 pcs	3300W	3.5KVA/5.5KVA
	12 pcs in serial	12 pcs	3960W	3.5KVA/5.5KVA
	6 pieces in serial and 2 sets in parallel	12 pcs	3960W	3.5KVA/5.5KVA
	8 pieces in serial and 2 sets in parallel	16 pcs	5280W	5.5KVA

PV Module Wire Connection:

Please follow below steps to implement PV module connection:

1. Remove insulation sleeve 10 mm for positive and negative conductors.
2. Check correct polarity of connection cable from PV modules and PV input connectors. Then, connect positive pole (+) of connection cable to positive pole (+) of PV input connector. Connect negative pole (-) of connection cable to negative pole of PV input connector.

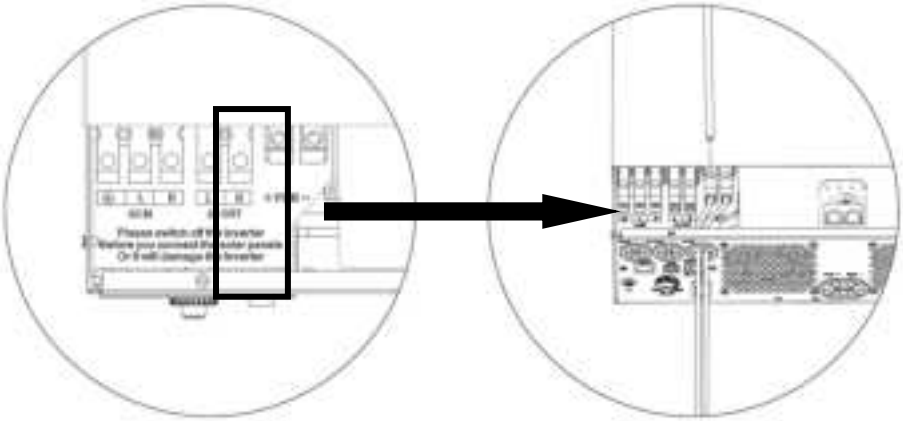

3. Make sure the wires are securely connected.

Final Assembly

After connecting all wirings, please put bottom cover back by screwing two screws as shown below.

Dry Contact Signal

There is one dry contact (3A/250VAC) available on the rear panel. When program 38 is set as "disable", it could be used to deliver signal to external device when battery voltage reaches warning level. When program 38 is set as "enable" and the unit is working in battery mode, it could be used to trigger the grounding box to connect neutral and grounding of AC output together.

When program 38 is set as "disable" (default setting):

Unit Status	Condition			Dry contact port:	
				NC & C	NO & C
Power Off	Unit is off and no output is powered.			Close	Open
Power On	Output is powered from Utility.			Close	Open
	Output is powered from Battery or Solar.	Program 01 set as Utility	Battery voltage < Low DC warning voltage	Open	Close
			Battery voltage > Setting value in Program 13 or battery charging reaches floating stage	Close	Open
		Program 01 is set as SBU or Solar first	Battery voltage < Setting value in Program 12	Open	Close
			Battery voltage > Setting value in Program 13 or battery charging reaches floating stage	Close	Open

When program 38 is set as "enable":

Unit Status	Condition	Dry contact port: 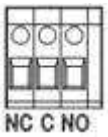	
		NC & C	NO & C
Power Off	Unit is off and no output is powered.	Close	Open
Power On	Unit works in standby mode, line mode or fault mode	Close	Open
	Unit works in battery mode or power saving mode	Open	Close

OPERATION

Power ON/OFF

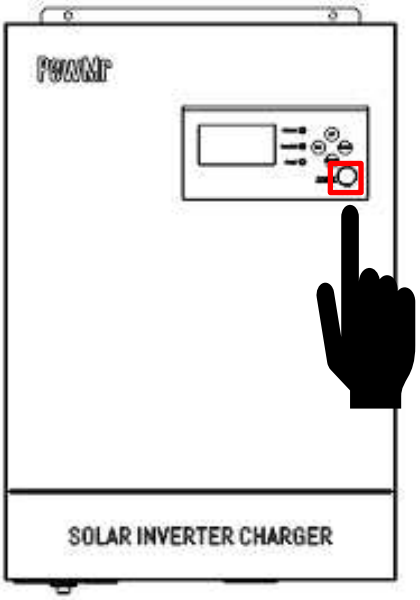

Once the unit has been properly installed and the batteries are connected well, simply press On/Off switch (located on the button of the case) to turn on the unit.

Operation and Display Panel

The operation and display panel, shown in below chart, is on the front panel of the inverter. It includes three indicators, four function keys and a LCD display, indicating the operating status and input/output power information.

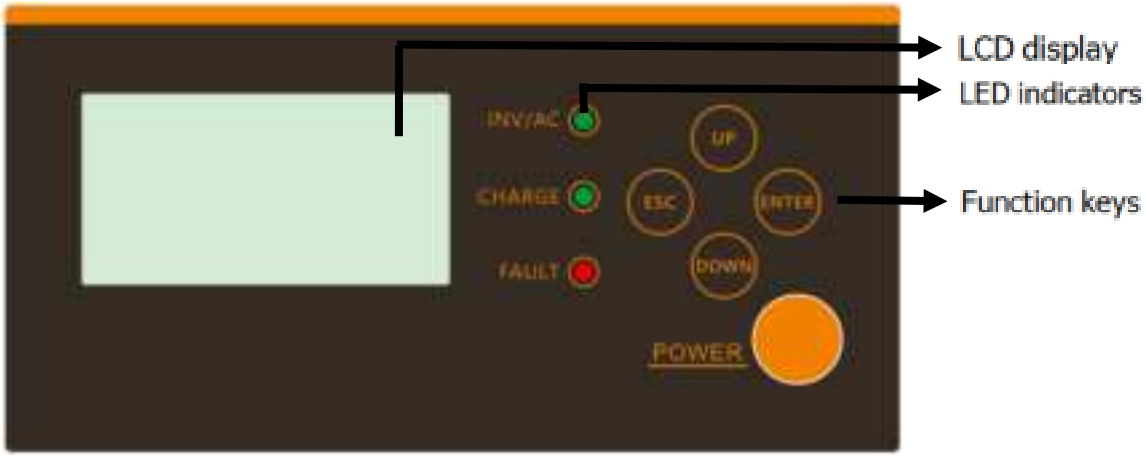

LED Indicator

LED Indicator			Messages
AC / INV	Green	Solid On	Output is powered by utility in Line mode.
		Flashing	Output is powered by battery or PV in battery mode.
CHARGE	Green	Solid On	Battery is fully charged.
		Flashing	Battery is charging.
FAULT	Red	Solid On	Fault occurs in the inverter.
		Flashing	Warning condition occurs in the inverter.

Function Keys

Function Key	Description
ESC	To exit setting mode
UP	To go to previous selection
DOWN	To go to next selection
ENTER	To confirm the selection in setting mode or enter setting mode

LCD Display Icons

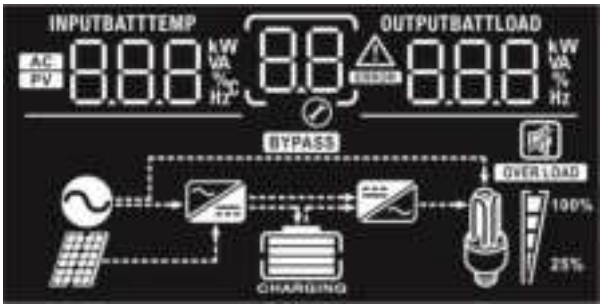

Icon	Function description
Input Source Information	
AC	Indicates the AC input.
PV	Indicates the PV input
INPUTBATT	Indicate input voltage, input frequency, PV voltage, battery voltage and charger current.
Configuration Program and Fault Information	
	Indicates the setting programs.
	Indicates the warning and fault codes. Warning: flashing with warning code. Fault: lighting with fault code
Output Information	
OUTPUTBATTLOAD	Indicate output voltage, output frequency, load percent, load in VA, load in Watt and discharging current.
Battery Information	
CHARGING	Indicates battery level by 0-24%, 25-49%, 50-74% and 75-100% in battery mode and charging status in line mode.

Load Information				
OVER LOAD	Indicates overload.			
	Indicates the load level by 0-24%, 25-49%, 50-74% and 75-100%.			
	0%~24%	25%~49%	50%~74%	75%~100%
Mode Operation Information				
	Indicates unit connects to the mains.			
	Indicates unit connects to the PV panel.			
BYPASS	Indicates load is supplied by utility power.			
	Indicates the utility charger circuit is working.			
	Indicates the DC/AC inverter circuit is working.			
Mute Operation				
	Indicates unit alarm is disabled.			

LCD Setting

After pressing and holding ENTER button for 3 seconds, the unit will enter setting mode. Press "UP" or "DOWN" button to select setting programs. And then, press "ENTER" button to confirm the selection or ESC button to exit.

Setting Programs:

Program	Description	Selectable option	
01	Output source priority: To configure load power source priority	Solar first 01 SOL	Solar energy provides power to the loads as first priority. If solar energy is not sufficient to power all connected loads, battery energy will supply power the loads at the same time. Utility provides power to the loads only when any one condition happens: - Solar energy is not available - Battery voltage drops to either low-level warning voltage or the setting point in program 12.
		Utility first (default) 01 UtI	Utility will provide power to the loads as first priority. Solar and battery energy will provide power to the loads only when utility power is not available.
		SBU priority 01 SbU	Solar energy provides power to the loads as first priority. If solar energy is not sufficient to power all connected loads, battery energy will supply power to the loads at the same time. Utility provides power to the loads only when battery voltage drops to either low-level warning voltage or the setting point in program 12.
		SUB priority 01 SUb	Solar energy is charged first and then power to the loads. If solar energy is not sufficient to power all connected loads, Utility energy will supply power to the loads at the same time.

02	Maximum charging current: To configure total charging current for solar and utility chargers. (Max. charging current = utility charging current + solar charging current)	10A 02 10	20A 02 20
		30A 02 30	40A 02 40
		50A 02 50	60A (default) 02 60
		70A 02 70	80A 02 80
03	AC input voltage range	Appliances (default) 03 APL	If selected, acceptable AC input voltage range will be within 90-280VAC.
		UPS 03 UPS	If selected, acceptable AC input voltage range will be within 170-280VAC.
04	Power saving mode enable/disable	Saving mode disable (default) 04 SdS	If disabled, no matter connected load is low or high, the on/off status of inverter output will not be effected.
		Saving mode enable 04 SEn	If enabled, the output of inverter will be off when connected load is pretty low or not detected.
05	Battery type	AGM (default) 05 AGn	Flooded 05 FLd
		User-Defined 05 USE	If "User-Defined" is selected, battery charge voltage and low DC cut-off voltage can be set up in program 26, 27 and 29.
06	Auto restart when overload occurs	Restart disable (default) 06 LrD	Restart enable 06 LrE
07	Auto restart when over temperature occurs	Restart disable (default) 07 trd	Restart enable 07 trE
08	Output voltage	220V 08 220	230V (default) 08 230
		240V 08 240	

09	Output frequency	50Hz (default)	60Hz	
10	Auto bypass When selecting “auto”, if the mains power is normal, it will automatically bypass, even if the switch is off.	manual(default)	auto	
11	Maximum utility charging current	2A	10A	
		20A	30A (default)	
		40A	50A	
		60A	70A	
		80A		
12	Setting voltage point back to utility source when selecting “SBU priority” or “Solar first” in program 01.	Available options in 48V models:		
		44V	45V	
		46V (default)	47V	
		48V	49V	
		50V	51V	
		52V	53V	
		54V	55V	
		Available options in 24V models:		
		22 V	23V (default)	24 V
		25 V	26V	27 V

13	Setting voltage point back to battery mode when selecting "SBU priority" or "Solar first" in program 01.	Available options in 48V models:	
		Battery fully charged (default)	48V
		49V	50V
		51V	52V
		53V	54V
		55V	56V
		57V	58V
		59V	60V
		61V	62V
		Available options in 24V models:	
		Battery fully charged (default)	24V
		25V	26V
		27V (default)	28V
		29v	30v

16	Charger source priority: To configure charger source priority	If this inverter/charger is working in Line, Standby or Fault mode, charger source can be programmed as below:	
		Solar first 16 CSO	Solar energy will charge battery as first priority. Utility will charge battery only when solar energy is not available.
		Utility first 16 CUt	Utility will charge battery as first priority. Solar energy will charge battery only when utility power is not available.
		Solar and Utility (default) 16 SNU	Solar energy and utility will charge battery at the same time.
		Only Solar 16 OSO	Solar energy will be the only charger source no matter utility is available or not.
		If this inverter/charger is working in Battery mode or Power saving mode, only solar energy can charge battery. Solar energy will charge battery if it's available and sufficient.	
18	Buzzer mode	Mode1 bU2 18 nd1	Buzzer mute
		Mode2 bU2 18 nd2	The buzzer sounds when the input source changes or there is a specific warning or fault
		Mode3 bU2 18 nd3	The buzzer sounds when there is a specific warning or fault
		Mode4(default) bU2 18 nd4	The buzzer sounds when there is a fault
19	Auto return to default display screen	Return to default display screen (default) 19 ESP	If selected, no matter how users switch display screen, it will automatically return to default display screen (Input voltage /output voltage) after no button is pressed for 1 minute.
		Stay at latest screen 19 tEP	If selected, the display screen will stay at latest screen user finally switches.
20	Backlight control	Backlight on (default) 20 LON	Backlight off 20 LOF

23	Overload bypass: When enabled, the unit will transfer to line mode if overload occurs in battery mode.	Bypass disable (default) 23 byd	Bypass enable 23 byE
25	Modbus ID Setting	Modbus ID Setting Range： 001(default)~247 nOd 25 001	
26	Bulk charging voltage (C.V voltage)	48V models default setting: 56.4V Cu 26 56.4v	
		24V models default setting: 28.2V Cu 26 28.2v	
		If self-defined is selected in program 5, this program can be set up. Setting range is from 25.0V to 31.5V for 24v model and 48.0V to 64.0V for 48v model. Increment of each click is 0.1V.	
27	Floating charging voltage	48V models default setting: 54.0V FLu 27 54.0v	
		24V models default setting: 27.0V FLu 27 27.0v	
		If self-defined is selected in program 5, this program can be set up. Setting range is from 25.0V to 31.5V for 24v model and 48.0V to 64.0V for 48v model. Increment of each click is 0.1V.	
28	AC output mode	Single: This inverter is used in single phase application. 28 SIG	Parallel: This inverter is operated in parallel system. (Need hardware support) 28 PAL
		L1 phase 28 3P1	The inverter is operated in L1 phase in 3-phase application
		L2 phase 28 3P2	The inverter is operated in L2 phase in 3-phase application
		L3 phase 28 3P3	The inverter is operated in L3 phase in 3-phase application
29	Low DC cut-off voltage	48V models default setting: 42.0V COu 29 42.0v	

		24V models default setting: 21.0v CDU 29 BATT 21.0V	
		If self-defined is selected in program 5, this program can be set up. Setting range is from 20.0V to 27.0V for 24v model and 40.0V to 54.0V for 48v model. Increment of each click is 0.1V. Low DC cut-off voltage will be fixed to setting value no matter what percentage of load is connected.	
31	Solar power balance: When enabled, solar input power will be automatically adjusted according to connected load power.	Solar power balance enable (Default): 31 SbE	If selected, solar input power will be automatically adjusted according to the following formula: Max. input solar power = Max. battery charging power + Connected load power.
		Solar power balance disable: 31 Sbd	If selected, the solar input power will be the same to max. battery charging power no matter how much loads are connected. The max. battery charging power will be based on the setting current in program 02. (Max. solar power = Max. battery charging power)
32	Bulk charging time (C.V stage)	Automatically (Default): 32 AUt	If selected, inverter will judge this charging time automatically.
		5 min 32 5	The setting range is from 5 min to 900 min. Increment of each click is 5 min.
		900 min 32 900	
		If "USE" is selected in program 05, this program can be set up.	
33	Battery equalization	Battery equalization 33 EEn	Battery equalization disable (default) 33 EdS
		If "Flooded" or "User-Defined" is selected in program 05, this program can be set up.	
34	Battery equalization voltage	48V models default setting is 58.4V. Setting range is from 48V ~ 64V. Increment of each click is 0.1V. EU 34 BATT 64.0V	
		24V models default setting is 29.2V. Setting range is from 24V ~ 32V. Increment of each click is 0.1V. EU 34 BATT 32.0V	

35	Battery equalized time	60min (default) 35 60	Setting range is from 5min to 900min. Increment of each click is 5min.
36	Battery equalized timeout	120min (default) 36 120	Setting range is from 5min to 900 min. Increment of each click is 5 min.
37	Equalization interval	30days (default) 37 30d	Setting range is from 0 to 90 days. Increment of each click is 1 day
38	Allow neutral and grounding of AC output is connected together: When enabled, inverter can deliver signal to trigger grounding box to short neutral and grounding	Disable: Neutral and grounding of AC output is disconnected. (Default) nEC 38 dIS	
		Enable: Neutral and grounding of AC output is connected. nEC 38 EnA	
		This function is only available when the inverter is working with external grounding box. Only when the inverter is working in battery mode, it will trigger grounding box to connect neutral and grounding of AC output.	
39	Equalization activated immediately	Enable 39 AEn	Disable (default) 39 AdS
		If equalization function is enabled in program 33, this program can be set up. If "Enable" is selected in this program, it's to activate battery equalization immediately and LCD main page will shows " E9". If "Disable" is selected, it will cancel equalization function until next activated equalization time arrives based on program 37 setting. At this time, "E9" will not be shown in LCD main page.	

Setting for lithium battery

This suggestion is used for lithium battery application and avoid lithium battery BMS protection, please finish the setting as follow:

1.Before starting setting，you must get the battery BMS specification：
A. Max charging voltage
B. Max charging current
C. Discharging protection voltage

2.Set battery type as "USE" （user-defined）

05	Battery type	AGM (default) 05 AGn	Flooded 05 FLd
		User-Defined 05 USE	If "User-Defined" is selected, battery charge voltage and low DC cut-off voltage can be set up in program 26, 27 and 29.

3. Set C.V voltage as Max charging voltage of BMS**-0.5V**.

26	Bulk charging voltage (C.V voltage)	default setting: 56.4V
		If self-defined is selected in program 5, this program can be set up. Setting range is from 48.0V to 64.0V. Increment of each click is 0.1V.

4. Set floating charging voltage as C.V voltage.

27	Floating charging voltage	default setting: 54.0V 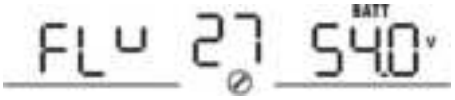
		If self-defined is selected in program 5, this program can be set up. Setting range is from 48.0V to 64.0V. Increment of each click is 0.1V.

5. Set Low DC cut-off voltage ⩾discharging protection voltage of BMS**+2V**.

29	Low DC cut-off voltage	default setting: 42.0V
		If self-defined is selected in program 5, this program can be set up. Setting range is from 40.0V to 54.0V. Increment of each click is 0.1V. Low DC cut-off voltage will be fixed to setting value no matter what percentage of load is connected.

6. Set Max charging current which must be less than the Max charging current of BMS.

02	Maximum charging current: To configure total charging current for solar and utility chargers. (Max. charging current = utility charging current + solar charging current)	10A 	20A 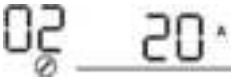
		30A 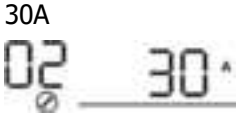 	40A 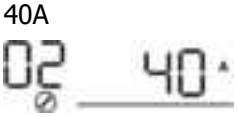
		50A 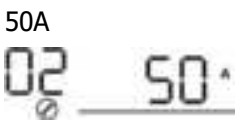 	60A (default) 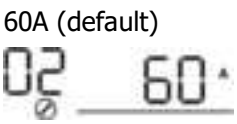
		70A 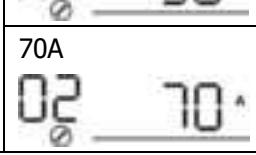 	80A 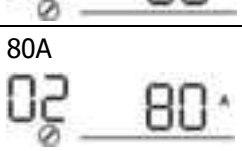

7. Setting voltage point back to utility source when selecting "SBU priority" or "Solar first" in program 01.The setting value must be ≥Low DC cut-off voltage**+1V**, or else the inverter will have a warning as battery voltage low.

12	Setting voltage point back to utility source when selecting "SBU priority" or "Solar first" in program 01.	Available options in 48V models: 46V (default)
		Available options in 24V models: 23V (default)

Remark:
1.you' d better to finish setting without turn on the inverter(just let the LCD show, no output);
2.when you finish setting, please restart the inverter.

Display Setting

The LCD display information will be switched in turns by pressing "UP" or "DOWN" key. The selectable information is switched as below order: input voltage, input frequency, PV voltage, MPPT charging current, MPPT charging power, charging current, charging power, battery voltage, output voltage, output frequency, load percentage, load in VA, load in Watt, DC discharging current, main CPU Version and second CPU Version.

Selectable information	LCD display
Input voltage/Output voltage (Default Display Screen)	Input Voltage=230V, output voltage=230V 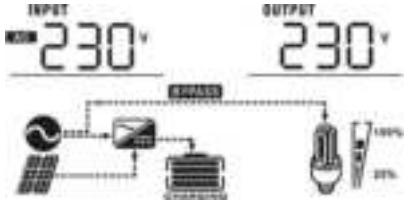
Input frequency	Input frequency=50Hz 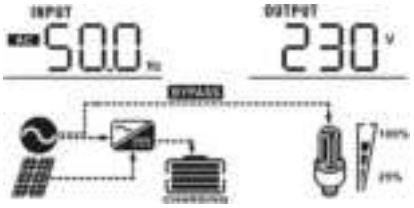
PV voltage	PV voltage=200V 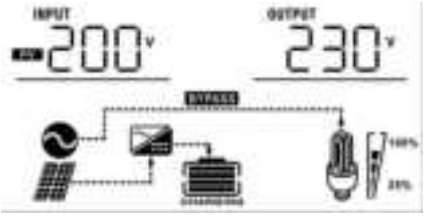
MPPT Charging current	Current ≧10A 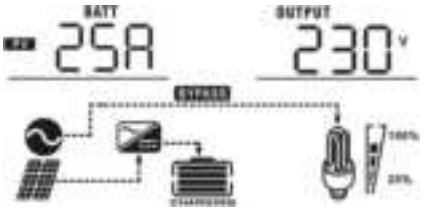 Current < 10A 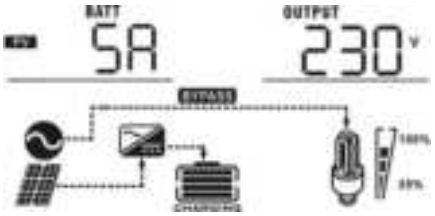

MPPT Charging power	MPPT charging power=500W
Charging current	AC and PV charging current=50A 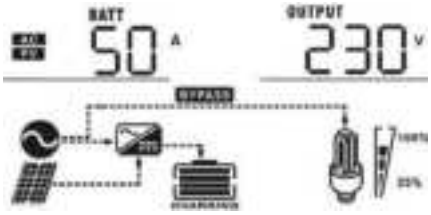 PV charging current=50A 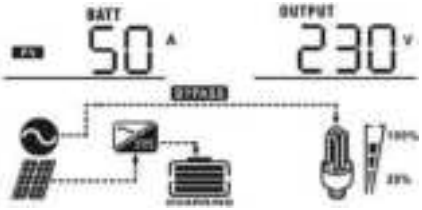 AC charging current=50A
Charging power	AC and PV charging power=500W 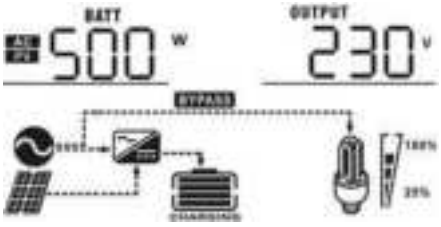 PV charging power=500W 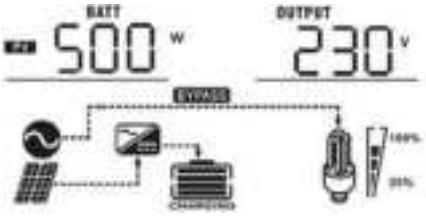 AC charging power=500W 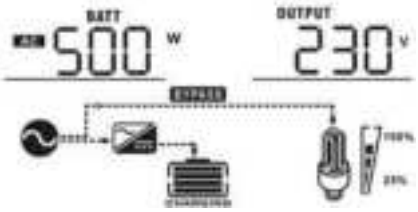

Battery voltage/ DC discharging current	Battery voltage=25.5V, discharging current=1A 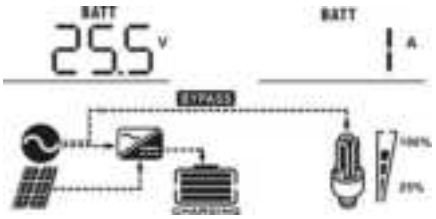
Output frequency	Output frequency=50Hz 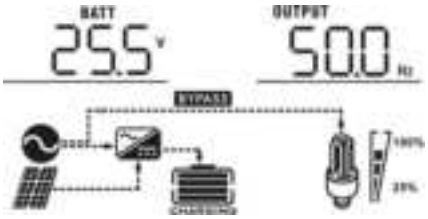
Load percentage	Load percent=70% 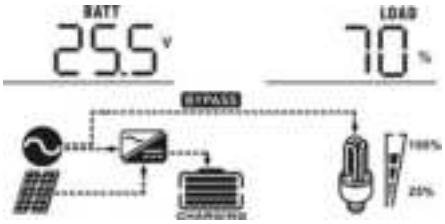
Load in VA	When connected load is lower than 1kVA, load in VA will present xxxVA like below chart. When load is larger than 1kVA (≥1KVA), load in VA will present x.xkVA like below chart. 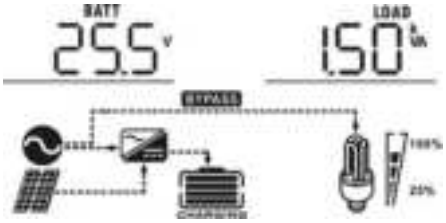

Load in Watt	When load is lower than 1kW, load in W will present xxxW like below chart. 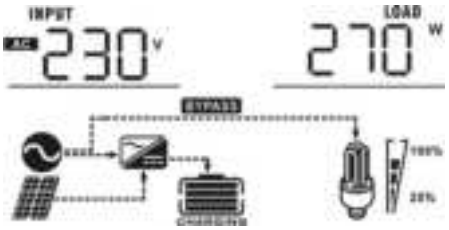 When load is larger than 1kW (≧1KW), load in W will present x.xkW like below chart. 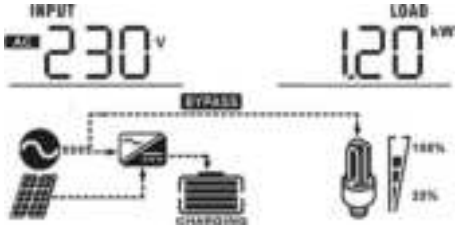
Main CPU version checking	Main CPU version 00014.04 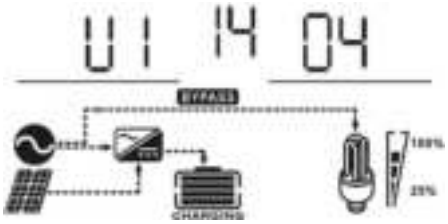

Operating Mode Description

Operation mode	Description	LCD display
Standby mode / Power saving mode **Note:** *Standby mode: The inverter is not turned on yet but at this time, the inverter can charge battery without AC output. *Power saving mode: If enabled, the output of inverter will be off when connected load is pretty low or not detected.	No output is supplied by the unit but it still can charge batteries.	Charging by utility and PV energy.
		Charging by utility.
		Charging by PV energy. 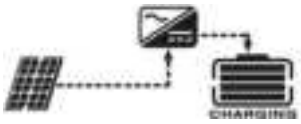
		No charging.

Fault mode Note: *Fault mode: Errors are caused by inside circuit error or external reasons such as over temperature, output short circuited and so on.	PV energy and utility can charge batteries.	Charging by utility and PV energy.
		Charging by utility.
		Charging by PV energy.
		No charging.
Line Mode	The unit will provide output power from the mains. It will also charge the battery at line mode.	Charging by utility and PV energy. 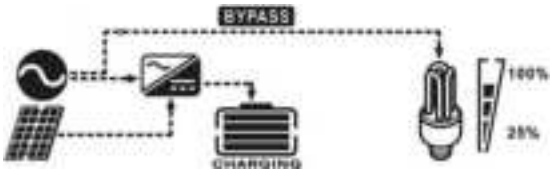
	The unit will provide output power from the mains. It will also charge the battery at line mode.	Charging by utility. 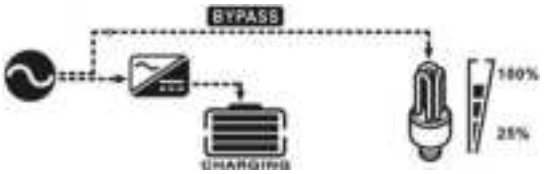
	The unit will provide output power from the mains. It will also charge the battery at line mode.	If "solar first" is selected as output source priority and solar energy is not sufficient to provide the load, solar energy and the utility will provide the loads and charge the battery at the same time. 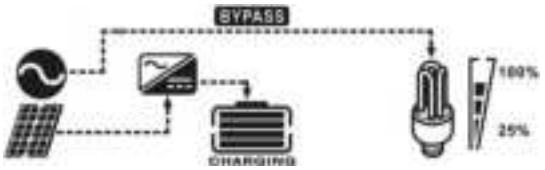

Line Mode	The unit will provide output power from the mains. It will also charge the battery at line mode.	if "SUB" is selected as output source priority and battery is connected, solar energy will charge battery as first priority. if solar energy is sufficient for charging, solar and the utility will provide the loads. 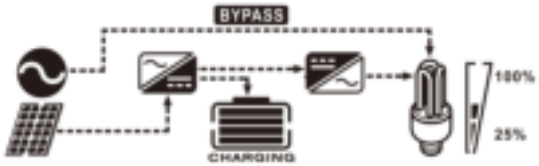
	The unit will provide output power from the mains.	If "solar first" is selected as output source priority and battery is not connected, solar energy and the utility will provide the loads. 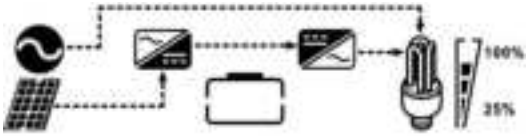
		Power from utility. 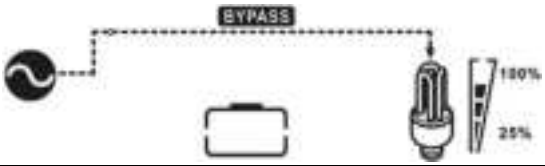
Battery Mode	The unit will provide output power from battery and PV power.	Power from battery and PV energy.
		PV energy will supply power to the loads and charge battery at the same time 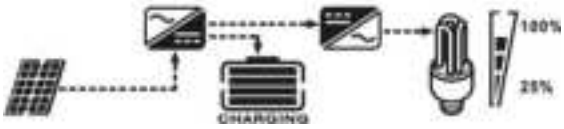
		Power from battery only.
		Power from PV energy only. 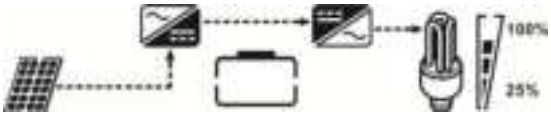

Fault Reference Code

Fault Code	Fault Event	Icon on
01	Reserved	
02	Over temperature	02
03	Battery voltage is too high	03
04	Reserved	
05	Output short circuited.	05
06	Output voltage is too high.	06
07	Overload time out	07
08	Bus voltage is too high	08
09	Bus soft start failed	09
10	PV over current	10
11	PV over voltage	11
12	DCDC over current	12
13	Over current or surge	13
14	Bus voltage is too low	14
15	Inverter failed (Self-checking)	15
16	Over DC voltage in AC output	16
17	Reserved	
18	Op current offset is too high	18
19	Inverter current offset is too high	19
20	DC/DC current offset is too high	20
21	PV current offset is too high	21
22	Output voltage is too low	22
23	Inverter negative power	23

Warning Indicator

Warning Code	Warning Event	Audible Alarm	Icon flashing
02	Temperature is too High	Beep three times every second	
04	Low battery	Beep once every second	
07	Overload	Beep once every 0.5 second	
10	Output power derating	Beep twice every 3 seconds	
15	PV energy is low	Beep twice every 3 seconds	
20	Battery low and it isn't up to the setting value of program 13	Beep twice every 3 seconds	
E9	Battery equalization	None	
bP	Battery is not connected	None	

BATTERY EQUALIZATION

Equalization function is added into charge controller. It reverses the buildup of negative chemical effects like stratification, a condition where acid concentration is greater at the bottom of the battery than at the top. Equalization also helps to remove sulfate crystals that might have built up on the plates. If left unchecked, this condition, called sulfation, will reduce the overall capacity of the battery. Therefore, it's recommended to equalize battery periodically.

- **How to Apply Equalization Function**

You must enable battery equalization function in monitoring LCD setting program 33 first. Then, you may apply this function in device by either one of following methods:

1.Setting equalization interval in program 37.

2.Active equalization immediately in program 39.

- **When to Equalize**

In float stage, when the setting equalization interval (battery equalization cycle) is arrived, or equalization is active immediately, the controller will start to enter Equalize stage.

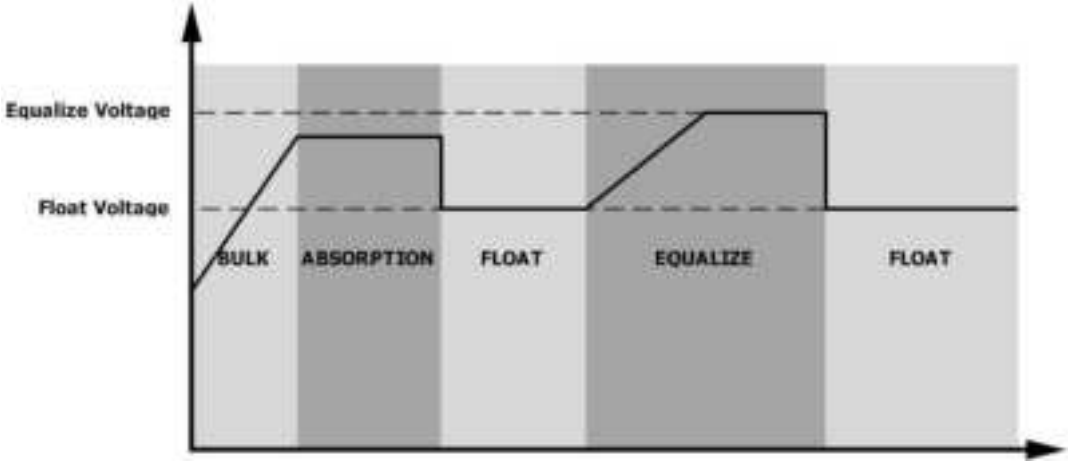

- **Equalize charging time and timeout**

In Equalize stage, the controller will supply power to charge battery as much as possible until battery voltage raises to battery equalization voltage. Then, constant-voltage regulation is applied to maintain battery voltage at the battery equalization voltage. The battery will remain in the Equalize stage until setting battery equalized time is arrived.

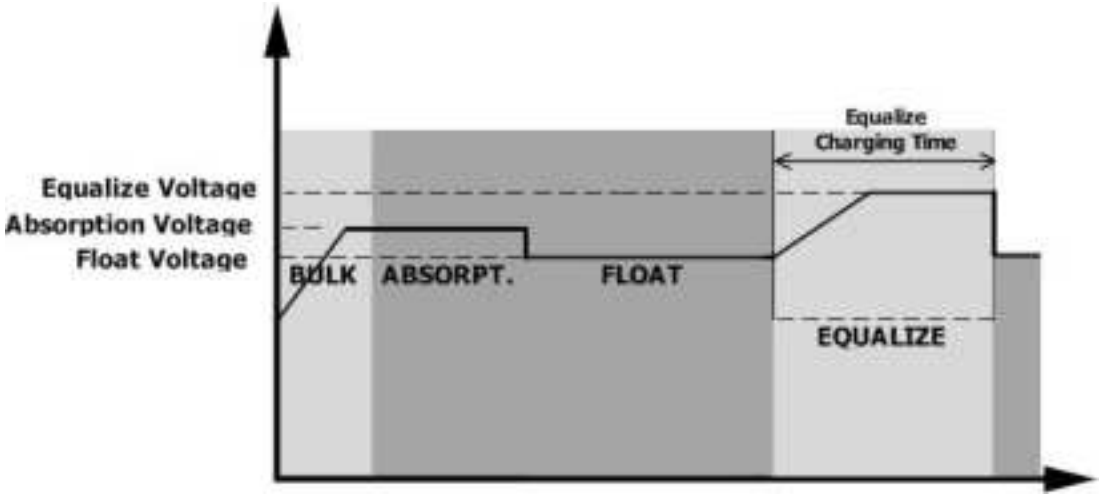

However, in Equalize stage, when battery equalized time is expired and battery voltage doesn't rise to battery equalization voltage point, the charge controller will extend the battery equalized time until battery voltage achieves battery equalization voltage. If battery voltage is still lower than battery equalization voltage when battery equalized timeout setting is over, the charge controller will stop equalization and return to float stage.

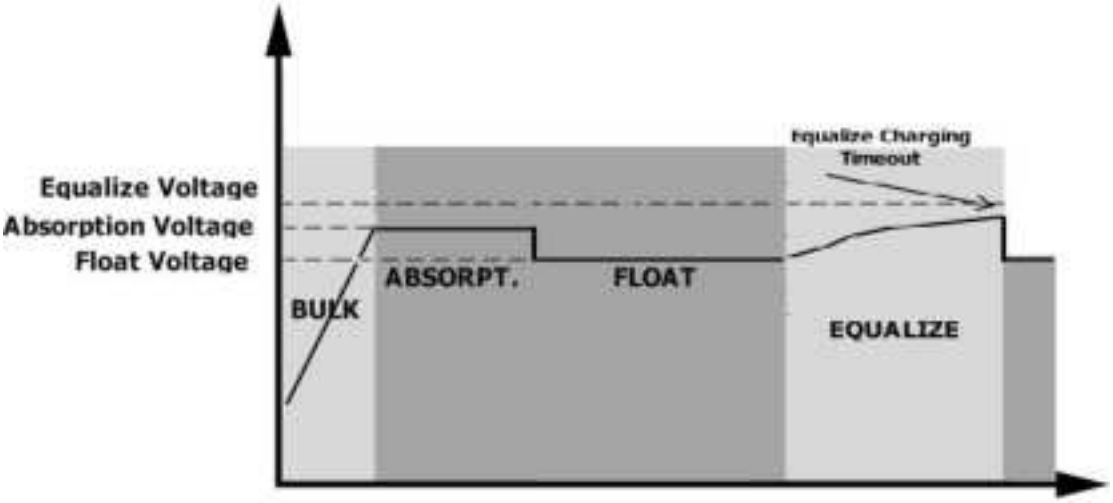

SPECIFICATIONS

Table 1 Line Mode Specifications

INVERTER MODEL	1.5KVA	3.5KVA	5.5KVA
Input Voltage Waveform	Sinusoidal (utility or generator)		
Nominal Input Voltage	230Vac		
Low Loss Voltage	170Vac±7V (UPS) 90Vac±7V (Appliances)		
Low Loss Return Voltage	180Vac±7V (UPS); 100Vac±7V (Appliances)		
High Loss Voltage	280Vac±7V		
High Loss Return Voltage	270Vac±7V		
Max AC Input Voltage	300Vac		
Nominal Input Frequency	50Hz / 60Hz (Auto detection)		
Low Loss Frequency	40±1Hz		
Low Loss Return Frequency	42±1Hz		
High Loss Frequency	65±1Hz		
High Loss Return Frequency	63±1Hz		
Output Short Circuit Protection	Line mode: Circuit Breaker Battery mode: Electronic Circuits		
Efficiency (Line Mode)	>95% (Rated R load, battery full charged)		
Transfer Time	10ms typical (UPS); 20ms typical (Appliances)		
Output power derating: When AC input voltage drops to 95V or 170V depending on models, the output power will be derated.	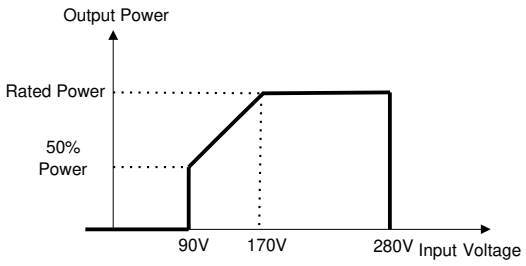		

Table 2 Inverter Mode Specifications

INVERTER MODEL	1.5KVA	3.5KVA	5.5KVA
Rated Output Power	1.5KVA/1.5KW	3.5KVA/3.5KW	5.5KVA/5.5KW
Output Voltage Waveform	Pure Sine Wave		
Output Voltage Regulation	230Vac±5%		
Output Frequency	60Hz or 50Hz		
Peak Efficiency	94%		
Overload Protection	5s@≥150% load; 10s@110%~150% load	5s@≥140% load; 10s@100%~140% load	
Surge Capacity	2* rated power for 5 seconds		
Nominal DC Input Voltage	24Vdc		48Vdc
Cold Start Voltage	23.0Vdc		46.0Vdc
Low DC Warning Voltage @ load < 20% @ 20% ≤ load < 50% @ load ≥ 50%	22.0Vdc 21.4Vdc 20.2Vdc		44.0Vdc 42.8Vdc 40.4Vdc
Low DC Warning Return Voltage @ load < 20% @ 20% ≤ load < 50% @ load ≥ 50%	23.0Vdc 22.4Vdc 21.2Vdc		46.0Vdc 44.8Vdc 42.4Vdc
Low DC Cut-off Voltage @ load < 20% @ 20% ≤ load < 50% @ load ≥ 50%	21.0Vdc 20.4Vdc 19.2Vdc		42.0Vdc 40.8Vdc 38.4Vdc

Table 3 Charge Mode Specifications

Utility Charging Mode				
INVERTER MODEL		**1.5KVA**	**3.5KVA**	**5.5KVA**
AC Charging Current (Max)		60Amp (@ $V_{I/P}$=230Vac)	100Amp (@ $V_{I/P}$=230Vac)	80Amp (@ $V_{I/P}$=230Vac)
Bulk Charging Voltage	**Flooded Battery**	29.2Vdc		58.4Vdc
	AGM / Gel Battery	28.2Vdc		56.4Vdc
Floating Charging Voltage		27Vdc		54Vdc
Overcharge Protection		33Vdc		63Vdc
Charging Algorithm		3-Step		
Charging Curve		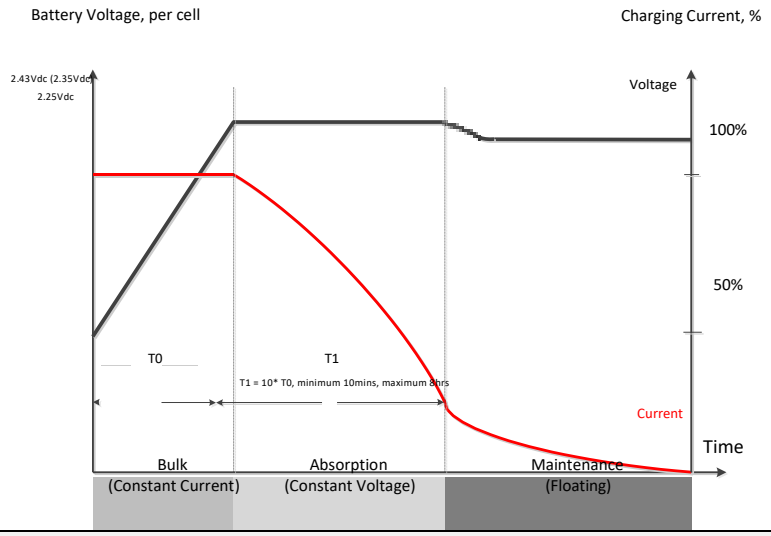		
Solar Input				
INVERTER MODEL		**1.5KVA**	**3.5KVA**	**5.5KVA**
Rated Power		2000W	4000W	5500W
Max. PV Array Open Circuit Voltage		500Vdc		
PV Array MPPT Voltage Range		120Vdc~450Vdc		
Max. Input Current		10A	15A	18A

Table 4 General Specifications

INVERTER MODEL	**1.5KVA**	**3.5KVA**	**5.5KVA**
Safety Certification	CE		
Operating Temperature Range	-10°C to 55°C		
Storage temperature	-15°C~ 60°C		
Humidity	5% to 95% Relative Humidity (Non-condensing)		
Dimension (D*W*H), mm	448x295x105		
Net Weight, kg	7.4	8.2	9.9

TROUBLE SHOOTING

Problem	LCD/LED/Buzzer	Explanation / Possible cause	What to do
Unit shuts down automatically during startup process.	LCD/LEDs and buzzer will be active for 3 seconds and then complete off.	The battery voltage is too low	1. Re-charge battery. 2. Replace battery.
No response after power on.	No indication.	1. The battery voltage is far too low. 2. Battery polarity is connected reversed.	1. Check if batteries and the wiring are connected well. 2. Re-charge battery. 3. Replace battery.
Mains exist but the unit works in battery mode.	Input voltage is displayed as 0 on the LCD and green LED is flashing.	Input protector is tripped	Check if AC breaker is tripped and AC wiring is connected well.
	Green LED is flashing.	Insufficient quality of AC power. (Shore or Generator)	1. Check if AC wires are too thin and/or too long. 2. Check if generator (if applied) is working well or if input voltage range setting is correct. (UPS→Appliance)
	Green LED is flashing.	Set "Solar First" as the priority of output source.	Change output source priority to Utility first.
When the unit is turned on, internal relay is switched on and off repeatedly.	LCD display and LEDs are flashing	Battery is disconnected.	Check if battery wires are connected well.
Buzzer beeps continuously and red LED is on.	Fault code 07	Overload error. The inverter is overload 110% and time is up.	Reduce the connected load by switching off some equipment.
	Fault code 05	Output short circuited.	Check if wiring is connected well and remove abnormal load.
	Fault code 02	Internal temperature of inverter component is over 100°C.	Check whether the air flow of the unit is blocked or whether the ambient temperature is too high.
	Fault code 03	Battery is over-charged.	Return to repair center.
		The battery voltage is too high.	Check if spec and quantity of batteries are meet requirements.
	Fault code 06/22	Output abnormal (Inverter voltage below than 190Vac or is higher than 260Vac)	1. Reduce the connected load. 2. Return to repair center
	Fault code 08/09/15	Internal components failed.	Return to repair center.
	Fault code 13	Over current or surge.	Restart the unit, if the error happens again, please return to repair center.
	Fault code 14	Bus voltage is too low.	
	Fault code 16	Output voltage is unbalanced.	
	Another fault code		If the wires is connected well, please return to repair center.

Parallel Installation Guide

1. Instruction

This inverter can be used in parallel with two different operation modes.

1. Parallel operation in single phase with up to 9 units. The supported maximum output power is 45KW/45KVA.
2. Maximum nine units work together to support three-phase equipment. Seven units support one phase maximum. The supported maximum output power is 45KW/45KVA and one phase can be up to 35KW/35KVA.

NOTE: If this unit is bundled with share current cable and parallel cable, this inverter is default supported parallel operation.

2. Package Contents

In parallel kit, you will find the following items in the package:

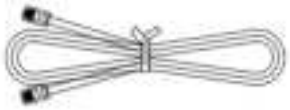

Parallel communication cable

3. Mounting the Unit

When installing multiple units, please follow below chart.

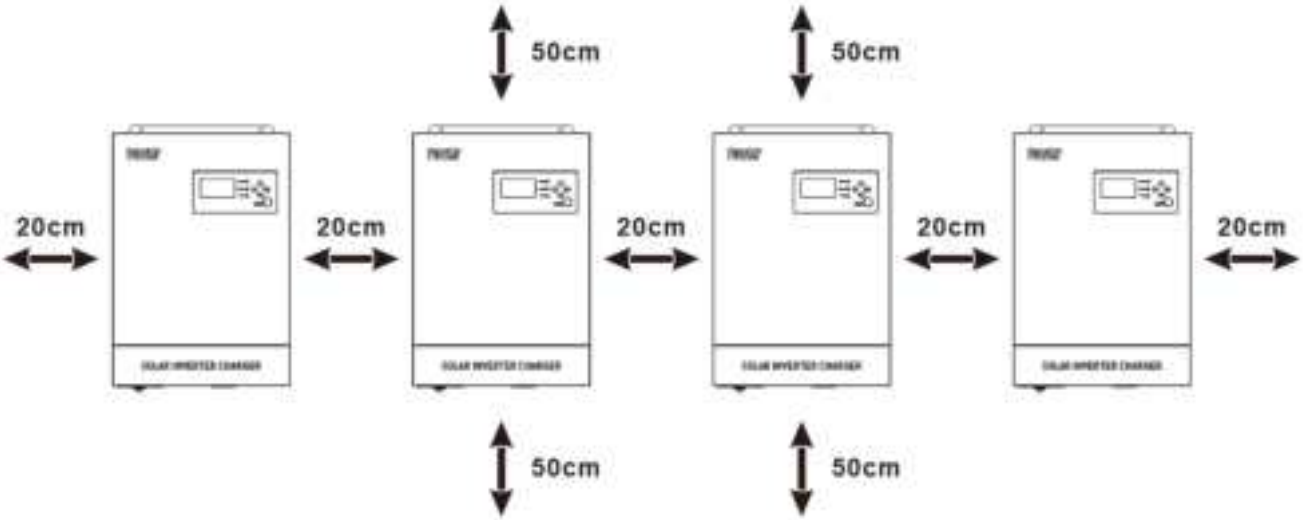

NOTE: For proper air circulation to dissipate heat, allow a clearance of approx. 20 cm to the side and approx. 50 cm above and below the unit. Be sure to install each unit in the same level.

4. Wiring Connection

NOTICE: It's requested to connect to battery for parallel operation.

The cable size of each inverter is shown as below:
Recommended battery cable and terminal size for each inverter:

Model	Wire Size	Cable mm^2	Dimensions		Torque value
			L1 (mm)	L2 (mm)	
3.5KVA	2AWG	38	3	18	2~ 3 Nm
5.5KVA	2AWG	38	3	18	2~ 3 Nm

Stripping Length:

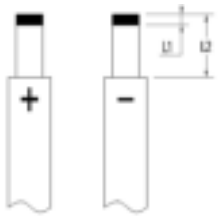

WARNING: Be sure the length of all battery cables is the same. Otherwise, there will be voltage difference between inverter and battery to cause parallel inverters not working.

Recommended AC input and output cable size for each inverter:

Model	AWG no.	Torque
3.5KVA	10 AWG	1.4~1.6Nm
5.5KVA	8 AWG	1.4~1.6Nm

You need to connect the cables of each inverter together. Take the battery cables for example: You need to use a connector or bus-bar as a joint to connect the battery cables together, and then connect to the battery terminal. The cable size used from joint to battery should be X times cable size in the tables above. "X" indicates the number of inverters connected in parallel.
Regarding AC input and output, please also follow the same principle.

CAUTION!! Please install the breaker at the battery and AC input side. This will ensure the inverter can be securely disconnected during maintenance and fully protected from over current of battery or AC input. The recommended mounted location of the breakers is shown in the figures in Point 5.

Recommended breaker specification of battery for each inverter:

Model	1 unit*
3.5KVA	100A/60VDC
5.5KVA	100A/60VDC

*If you want to use only one breaker at the battery side for the whole system, the rating of the breaker should be X times current of 1 unit. "X" indicates the number of inverters connected in parallel.

Recommended breaker specification of AC input with single phase:

Model	2 units	3 units	4 units	5 units	6 units	7 units	8 units	9 units
3.5KVA	80A	120A	160A	200A	240A	280A	320A	360A
5.5KVA	100A	150A	200A	250A	300A	350A	400A	450A

Note1: Also, you can use 40A breaker (50A for 5KVA) for only 1 unit, and each inverter has a breaker at its AC input.

Recommended battery capacity

Inverter parallel numbers	2	3	4	5	6	7	8	9
Battery Capacity	400AH	600AH	800AH	1000AH	1200AH	1400AH	1600AH	1800AH

WARNING! Be sure that all inverters will share the same battery bank. Otherwise, the inverters will transfer to fault mode.

5-1. Parallel Operation in Single phase

Two inverters in parallel:

Power Connection

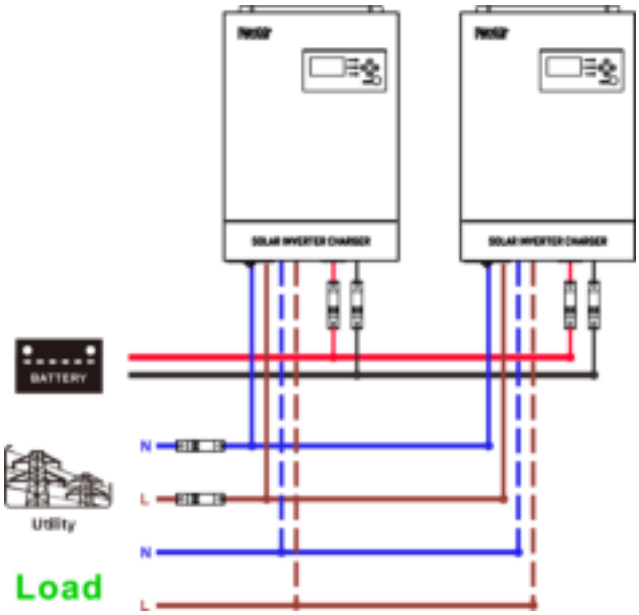

Communication Connection

Three inverters in parallel:

Power Connection

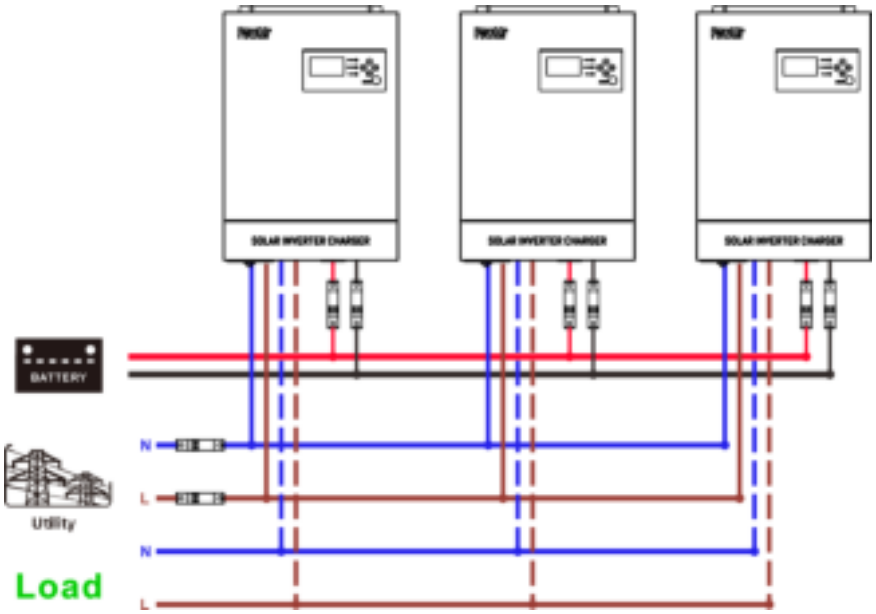

Communication Connection

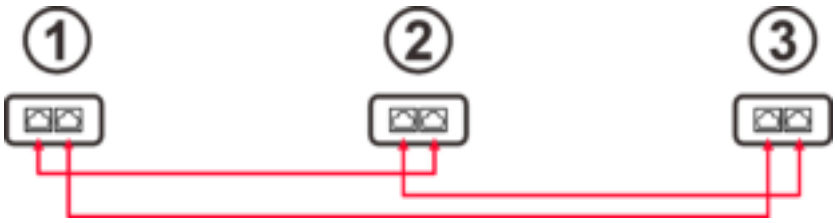

Four inverters in parallel:

Power Connection

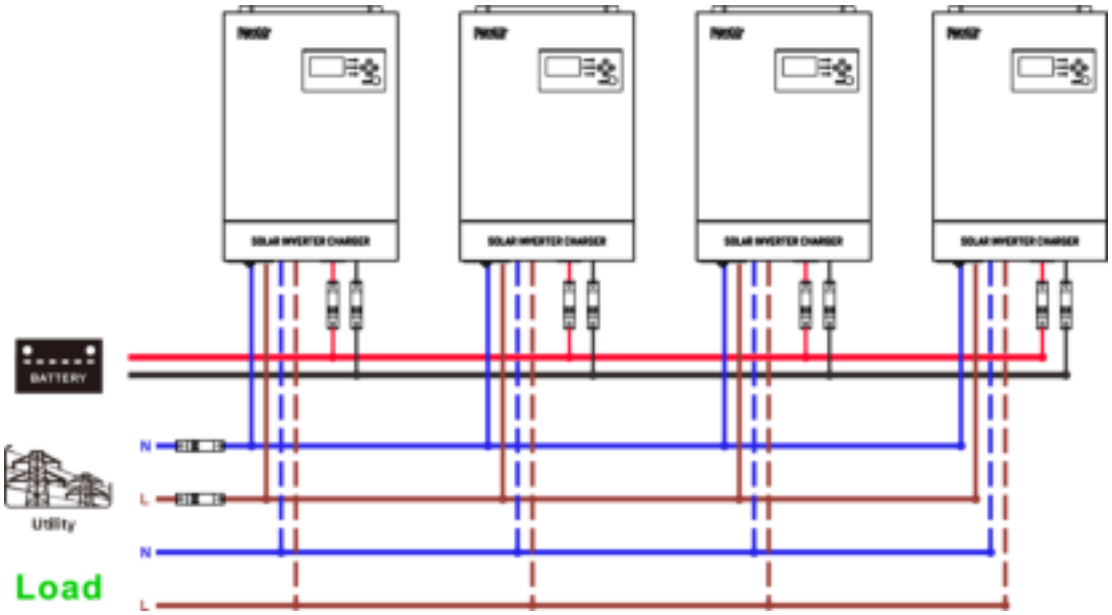

Communication Connection

Five inverters in parallel:

Power Connection

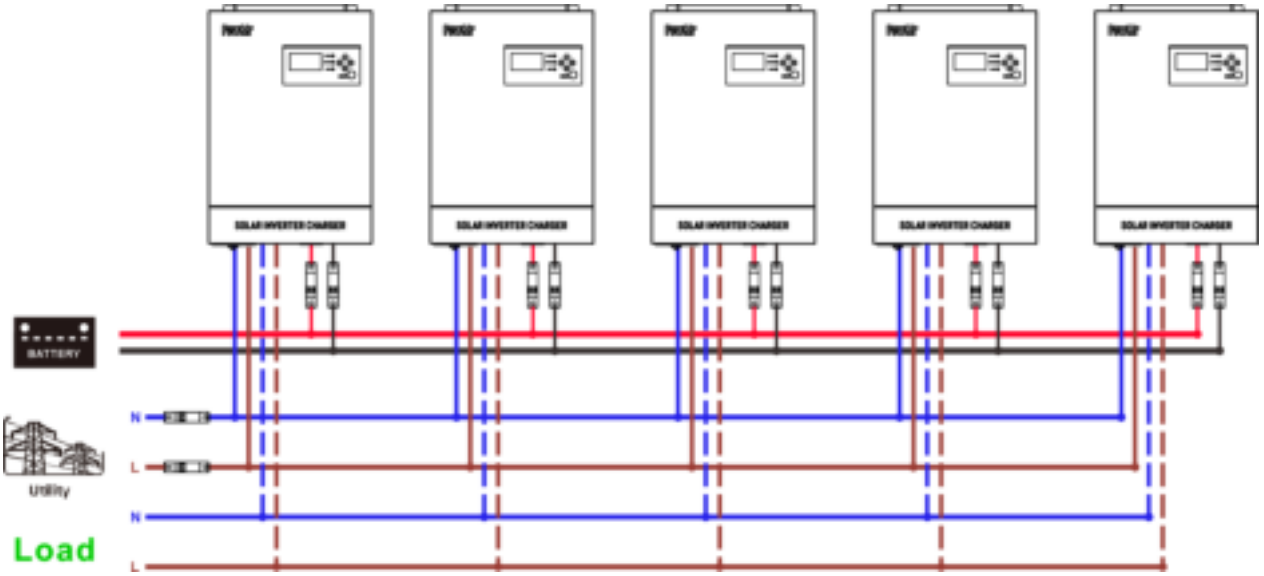

Communication Connection

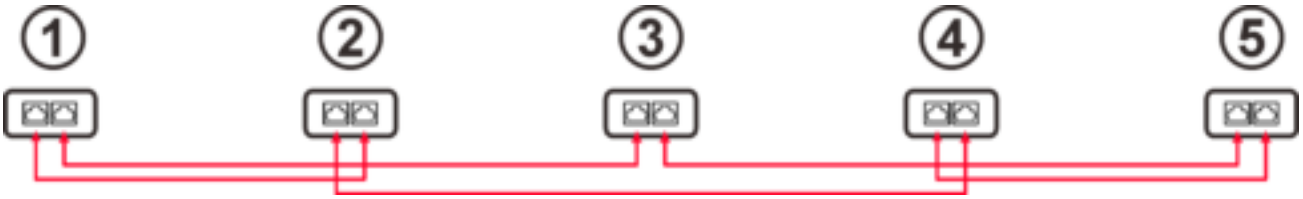

Six inverters in parallel:

Power Connection

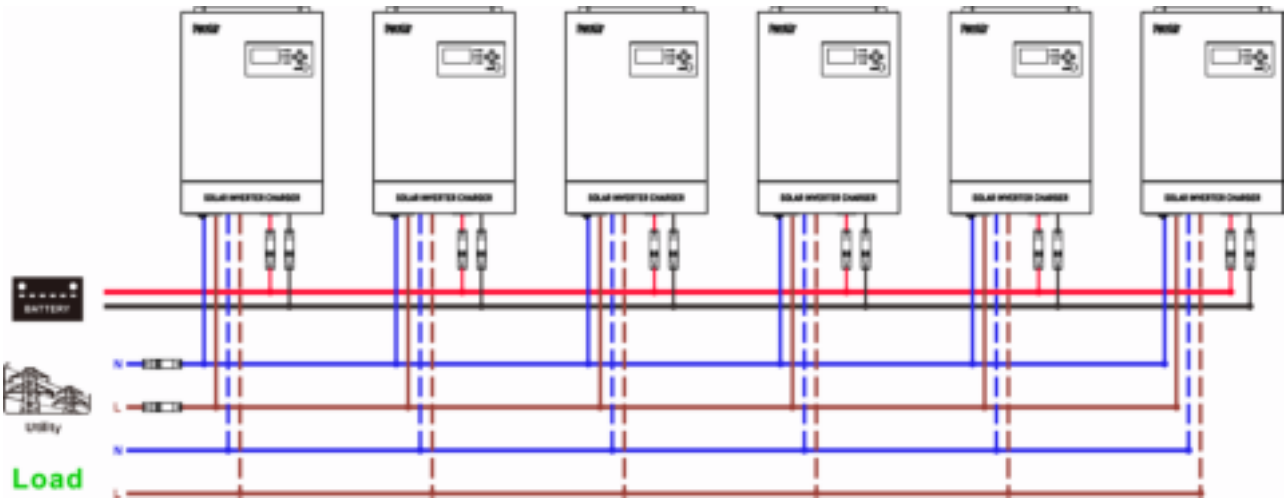

Communication Connection

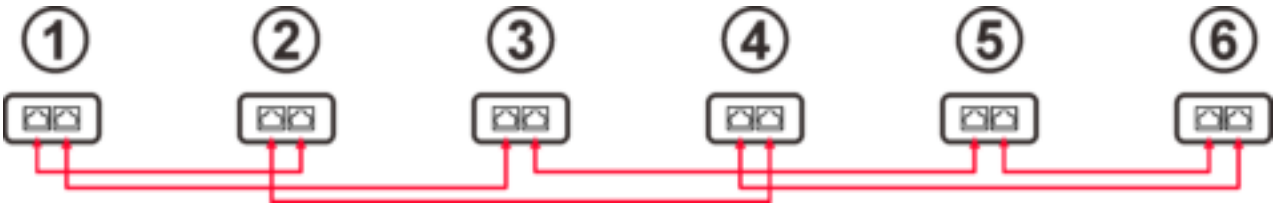

Seven to nine inverters in parallel:

Power Connection

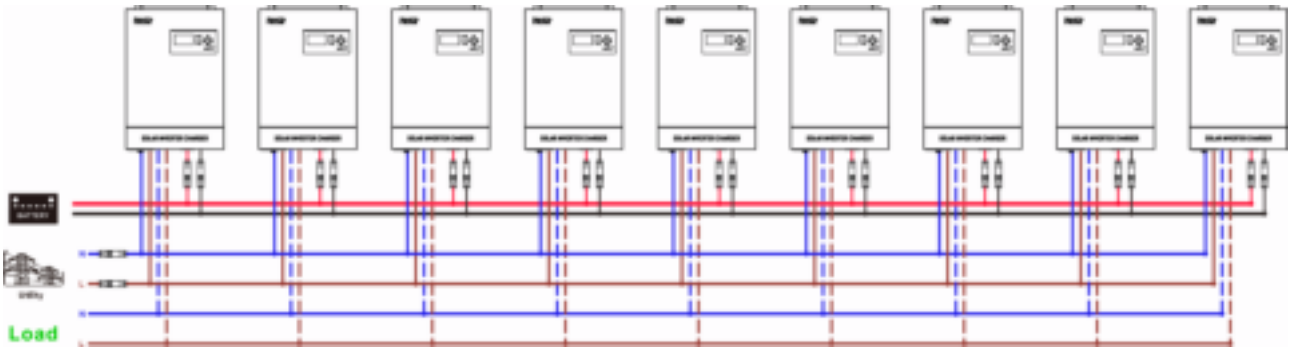

Communication Connection

- Seven inverters in parallel

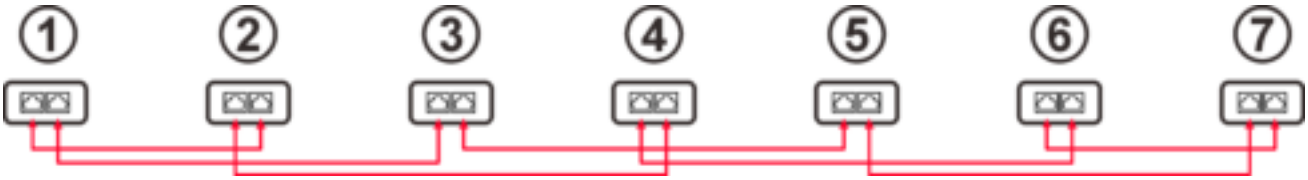

- Eight inverters in parallel

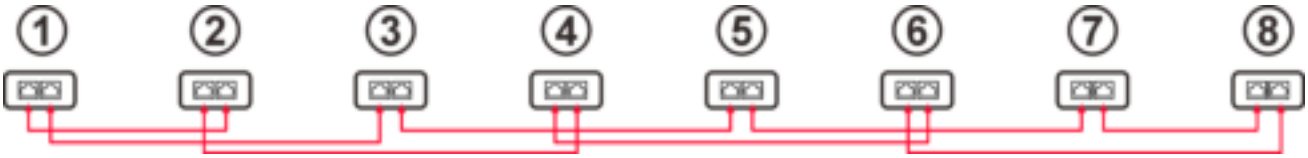

- Nine inverters in parallel

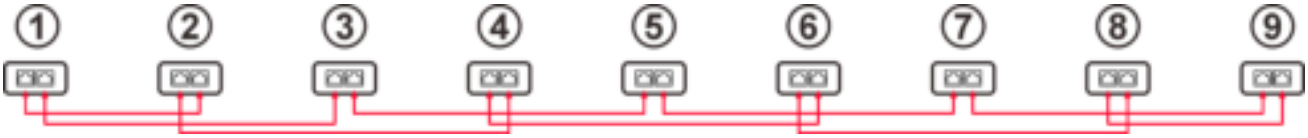

5-2. Support 3-phase equipment

Three inverters in each phase:

Power Connection

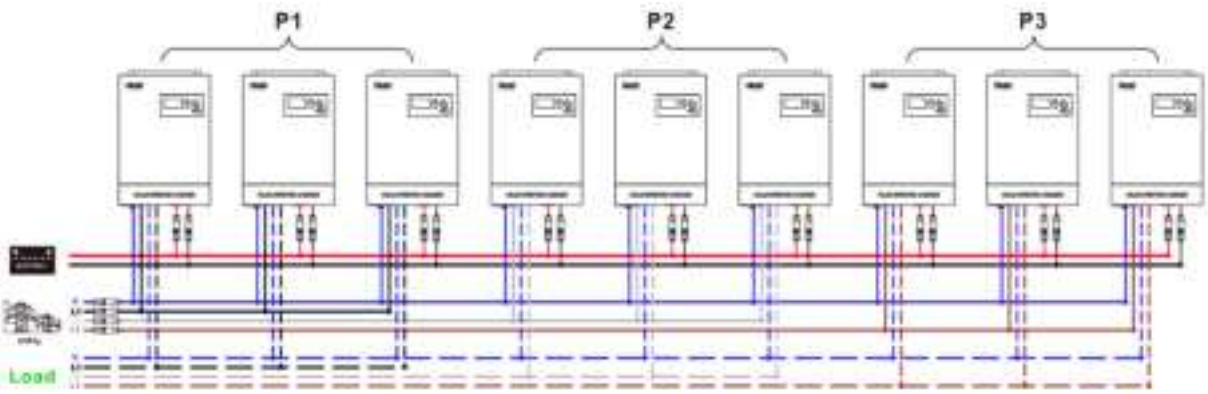

Communication Connection

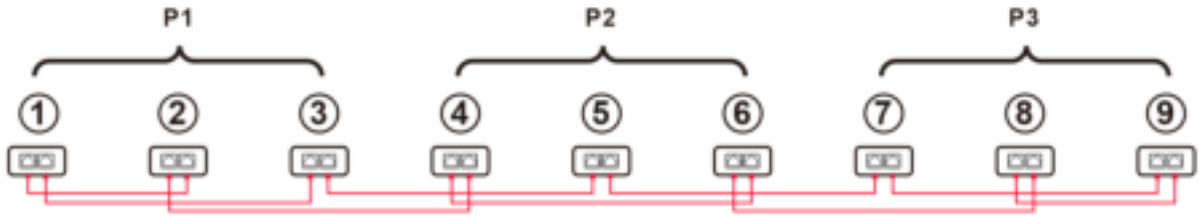

WARNING: Do not connect the current sharing cable between the inverters which are in different phases. Otherwise, it may damage the inverters.

Two inverters in each phase:

Power Connection

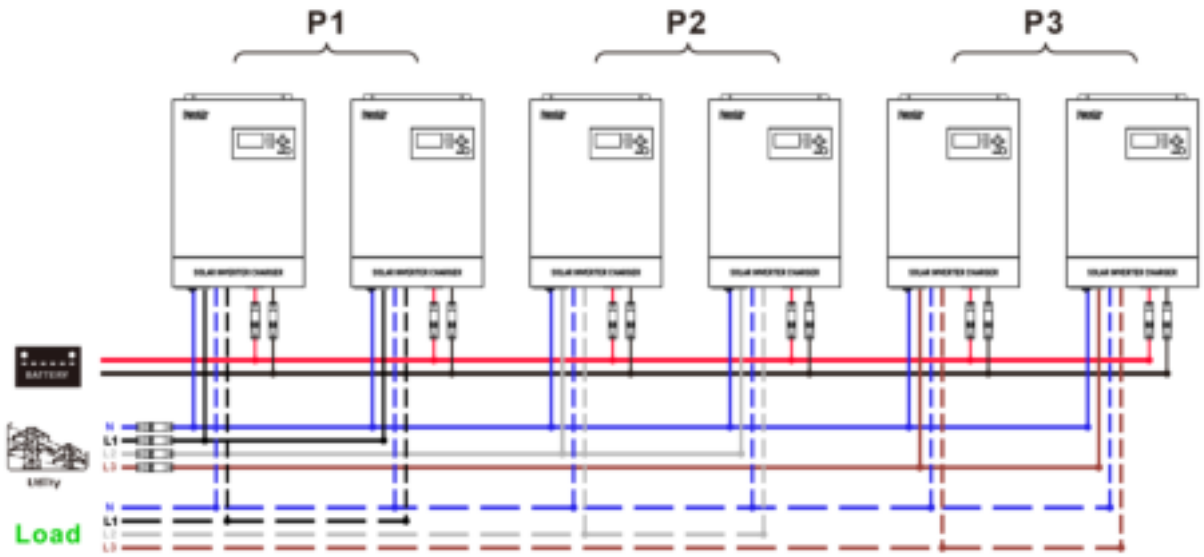

Communication Connection

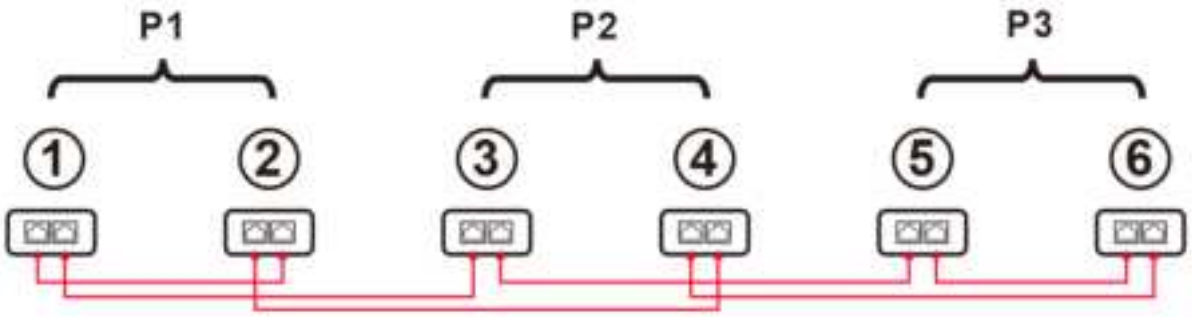

Seven inverters in one phase and one inverter for the other two phases:

Power Connection

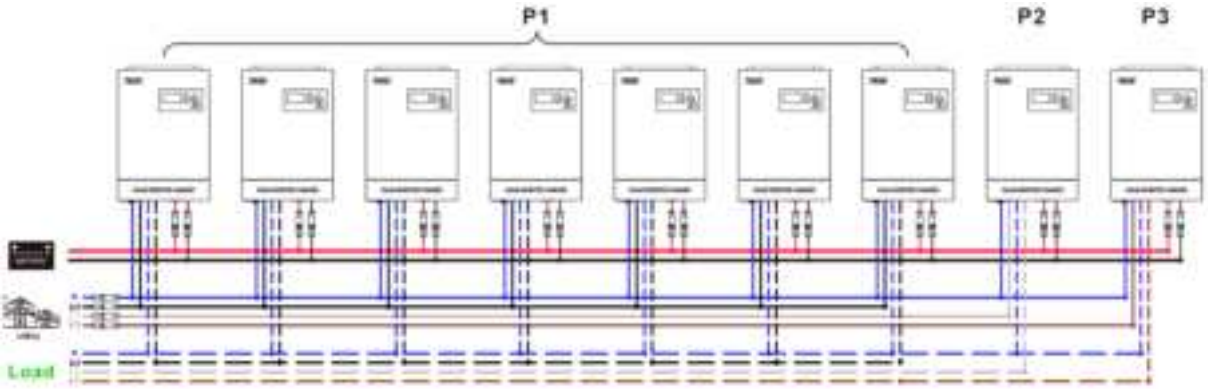

Note: It's up to customer's demand to pick 7 inverters on any phase.

P1: L1-phase, P2: L2-phase, P3: L3-phase.

Communication Connection

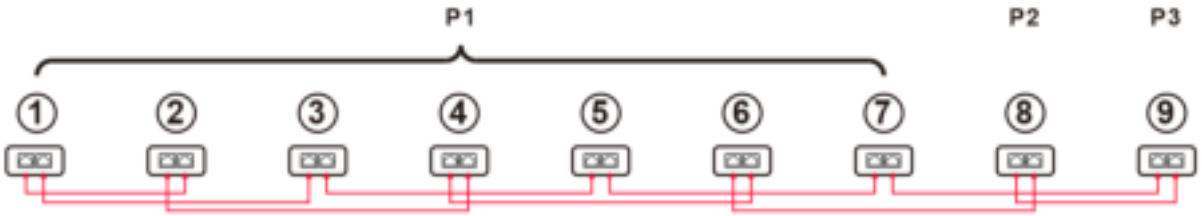

Note: If there is only one unit in one phase, this unit doesn't need to connect the current sharing cable. Or you connect it like as below:

Four inverters in one phase and one inverter for the other two phases:

Power Connection

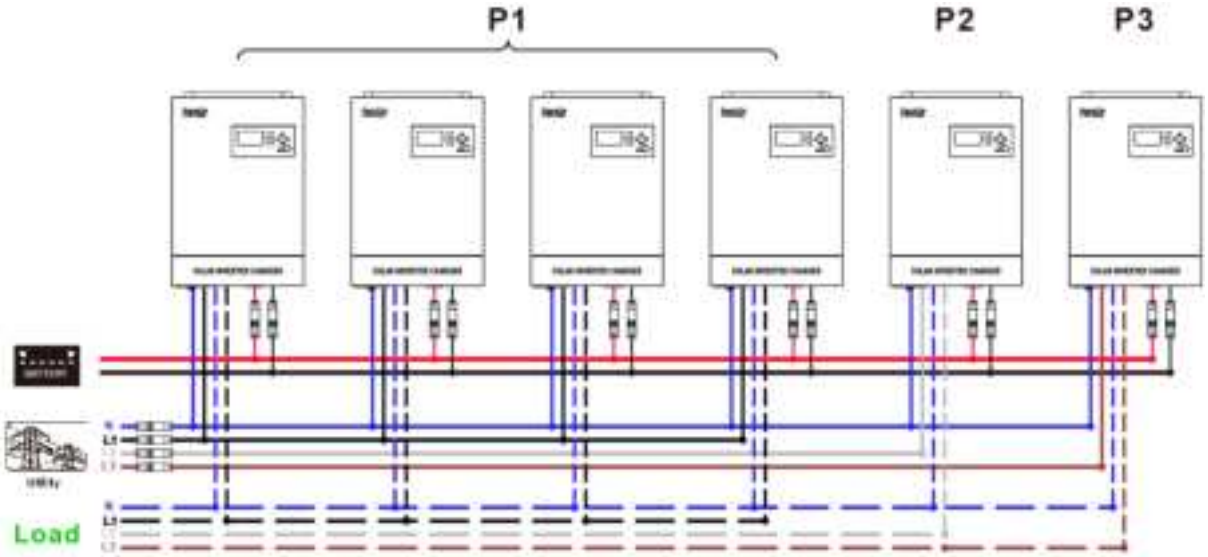

Note: It's up to customer's demand to pick 4 inverters on any phase.

P1: L1-phase, P2: L2-phase, P3: L3-phase.

Communication Connection

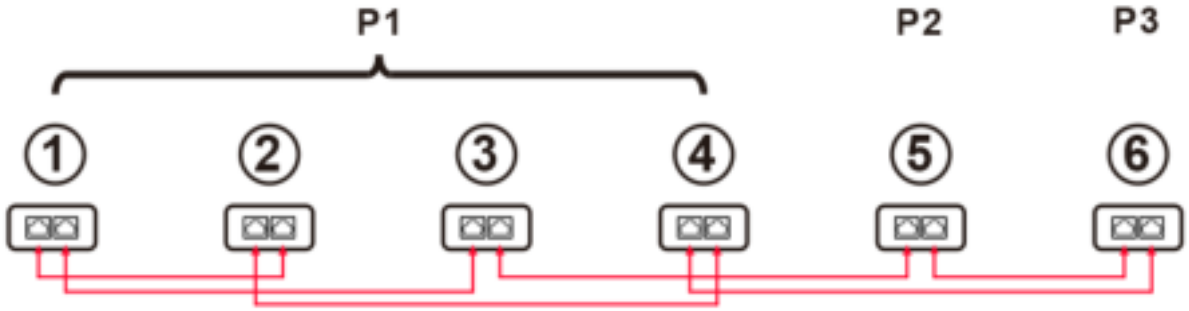

Three inverters in one phase, two inverters in second phase and one inverter for the third phase:

Power Connection

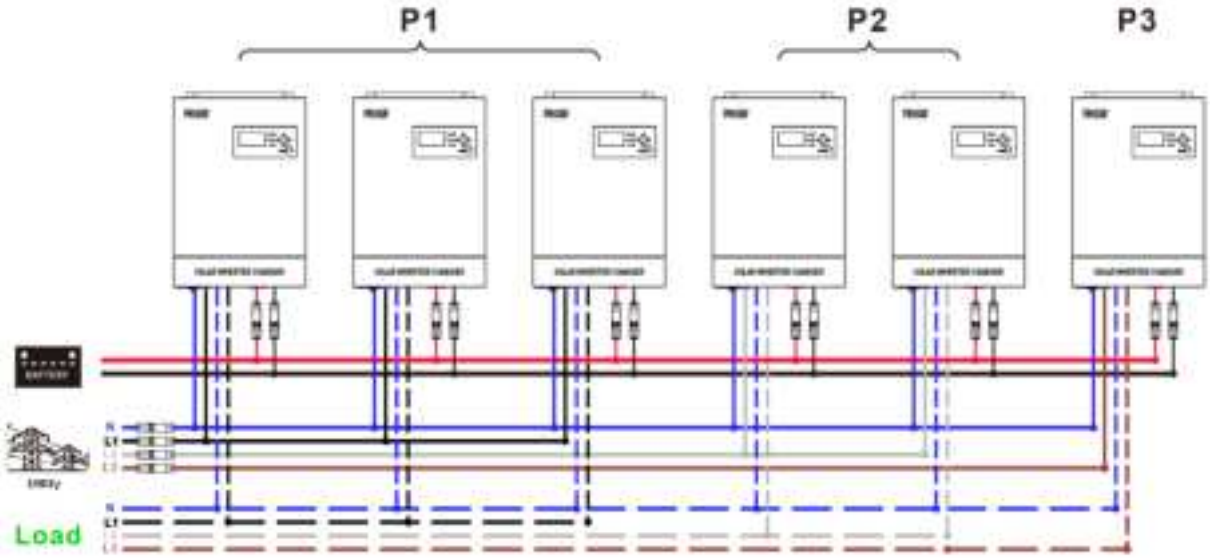

Communication Connection

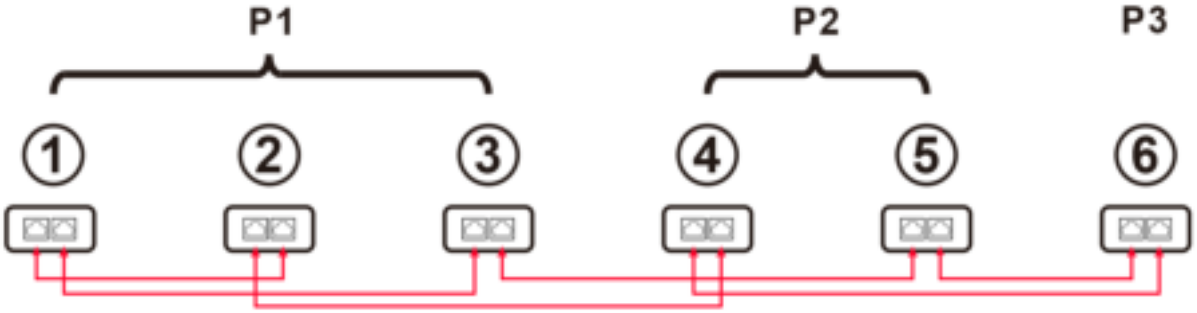

Three inverters in one phase and only one inverter for the remaining two phases:

Power Connection

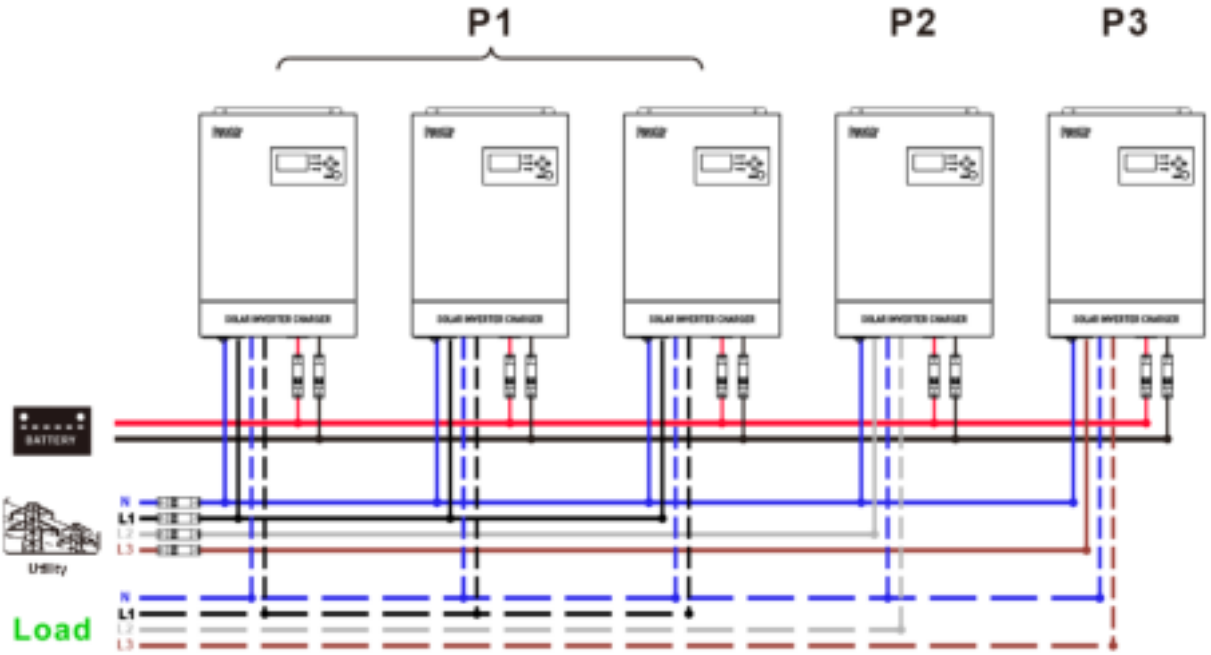

Communication Connection

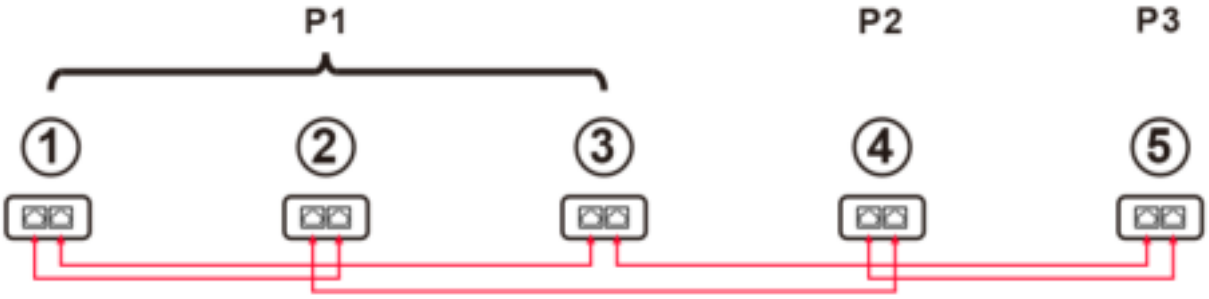

Two inverters in two phases and only one inverter for the remaining phase:

Power Connection

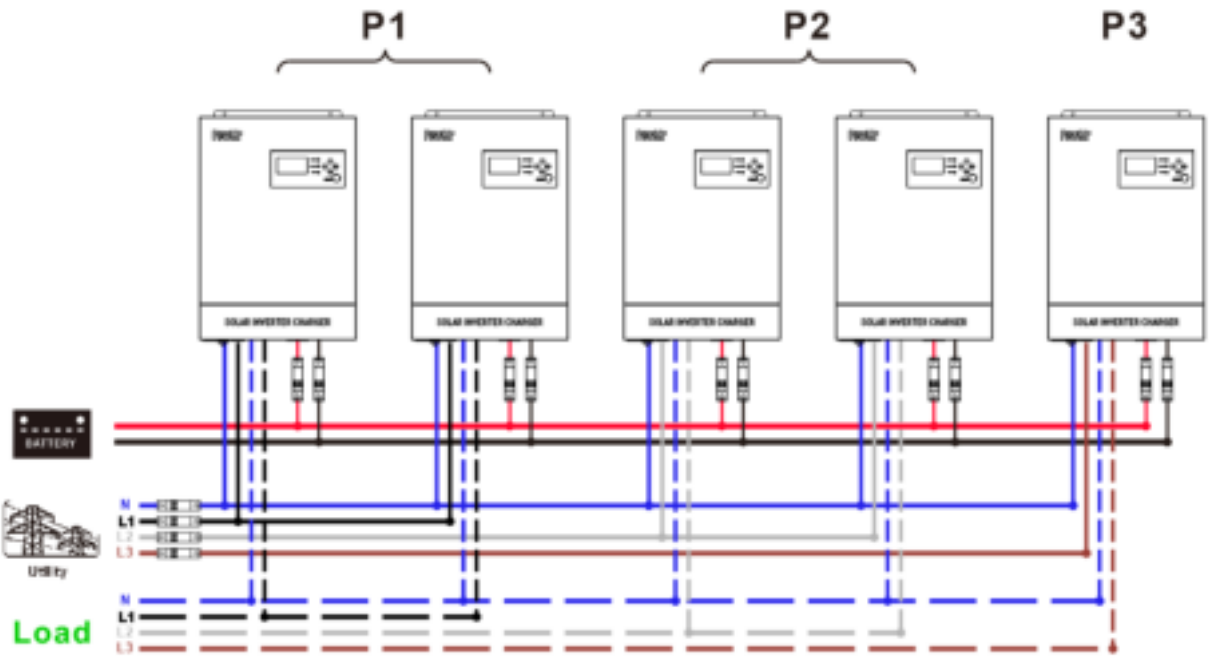

Communication Connection

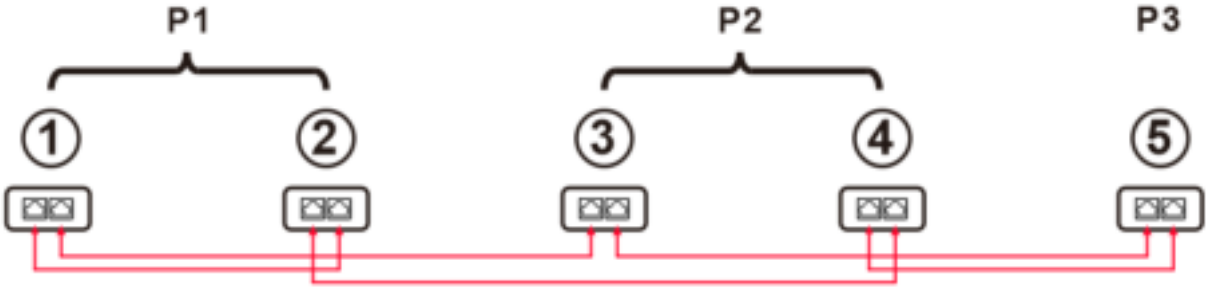

Two inverters in one phase and only one inverter for the remaining phases:

Power Connection

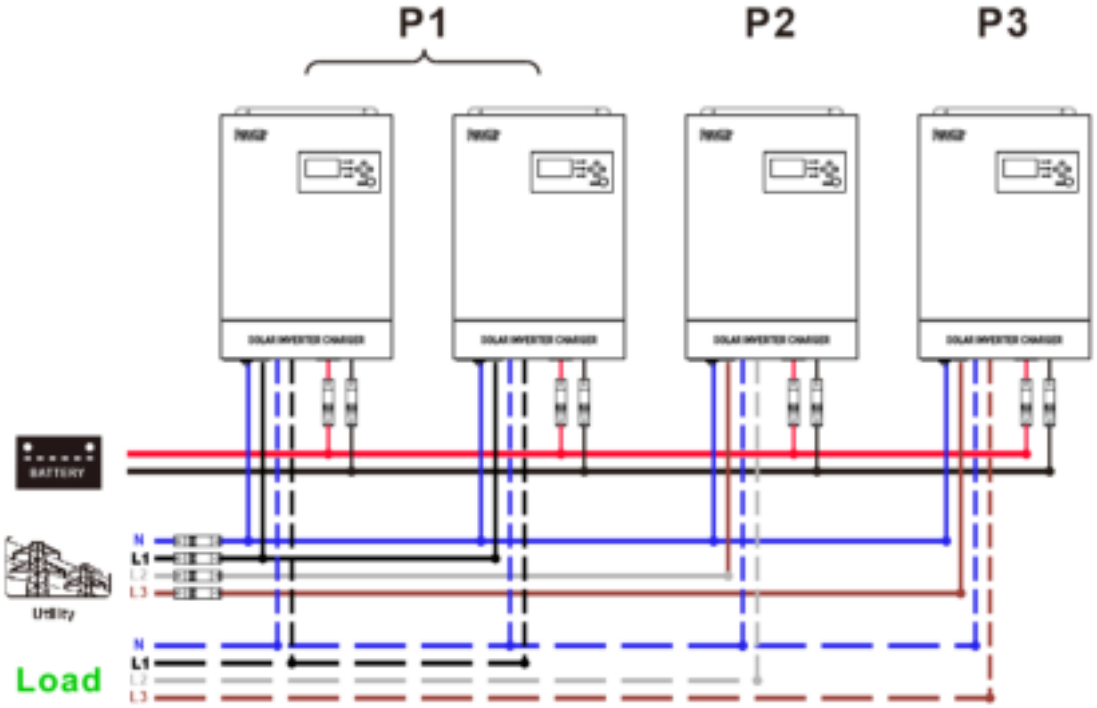

Communication Connection

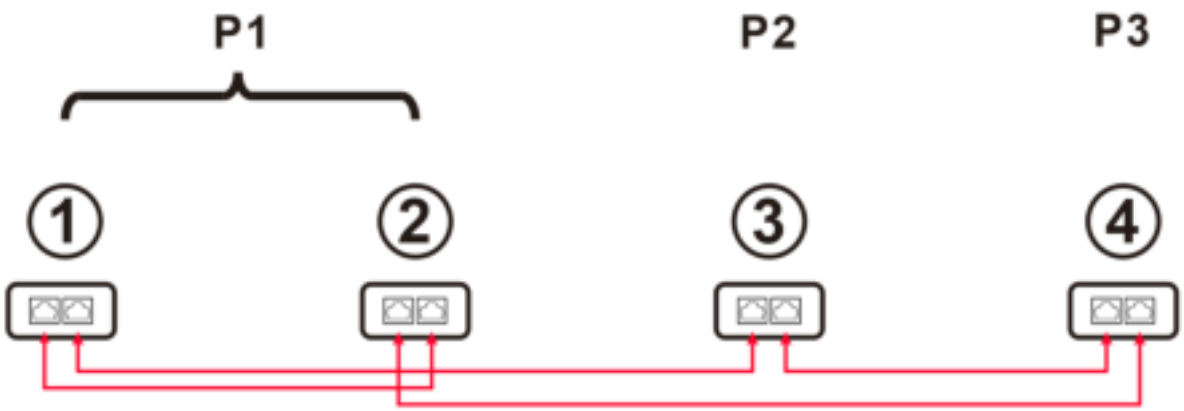

One inverter in each phase:

Power Connection

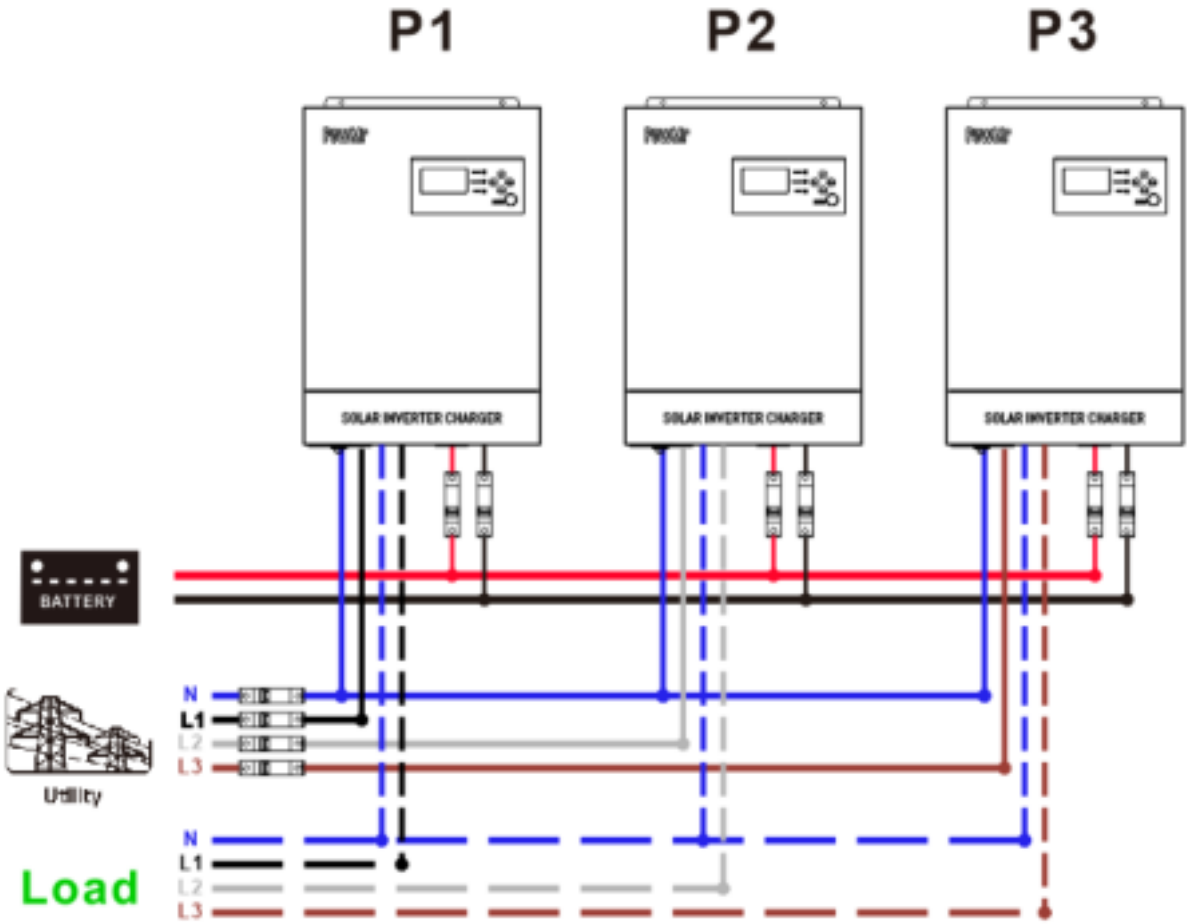

Communication Connection

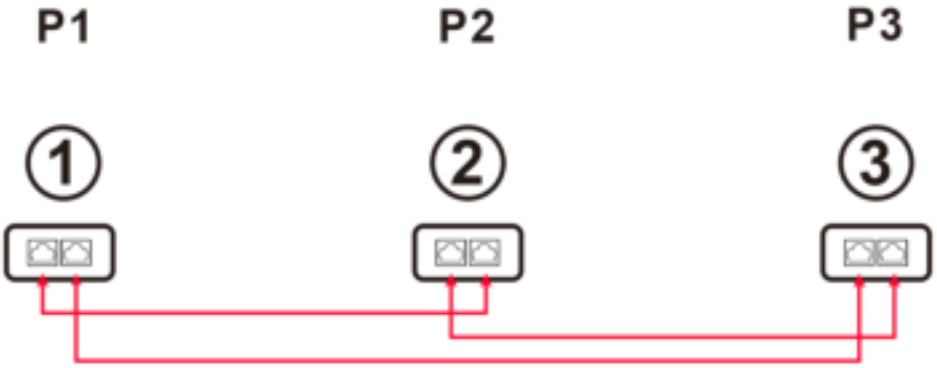

WARNING: Do not connect the current sharing cable between the inverters which are in different phases. Otherwise, it may damage the inverters.

6. PV Connection

Please refer to user manual of single unit for PV Connection.

CAUTION: Each inverter should connect to PV modules separately.

7. LCD Setting and Display

Setting Program:

Program	Description	Selectable option	
28	AC output mode	Single: This inverter is used in single phase application. 28 SIG	Parallel: This inverter is operated in parallel system. (Need hardware support) 28 PAL
		L1 phase 28 3P1	The inverter is operated in L1 phase in 3-phase application
		L2 phase 28 3P2	The inverter is operated in L2 phase in 3-phase application
		L3 phase 28 3P3	The inverter is operated in L3 phase in 3-phase application
30	PV judge condition (Only apply for setting "Solar first" in program 1: Output source priority)	One Inverter (Default): 30 ONE	When "ONE" is selected, as long as one of inverters has been connected to PV modules and PV input is normal, parallel or 3-phase system will continue working according to rule of "solar first" setting. For example, two units are connected in parallel and set "SOL" in output source priority. If one of two units has connected to PV modules and PV input is normal, the parallel system will provide power to loads from solar or battery power. If both of them are not sufficient, the system will provide power to loads from utility.
		All of Inverters: 30 ALL	When "ALL" is selected, parallel or 3-phase system will continue working according to rule of "solar first" setting only when all of inverters are connected to PV modules. For example, two units are connected in parallel and set "SOL" in output source priority. When selecting "ALL" in program 30, it's necessary to have all inverters connected to PV modules and PV input is normal to allow the system to provide power to loads from solar and battery power. Otherwise, the system will provide power to loads from utility.

Fault code display:

Fault Code	Fault Event	Icon on
24	Host loss	
25	Synchronization loss	
27	Firmware version inconsistent	

Warning code display:

Warning Code	Warning Event	Icon on
16	CAN communication loss	
17	AC output mode setting is different	
18	Battery voltage detected different	

8.Commissioning

Parallel in single phase

Step 1: Check the following requirements before commissioning:

- Correct wire connection
- Ensure all breakers in Line wires of load side are open and each Neutral wires of each unit are connected together.

Step 2: Turn on each unit and set "PAL" in LCD setting program 28 of each unit. And then shut down all units. **NOET:** It's necessary to turn off switch when setting LCD program. Otherwise, the setting can not be programmed.

Step 3: Turn on each unit.

LCD display in Master unit	LCD display in Slave unit
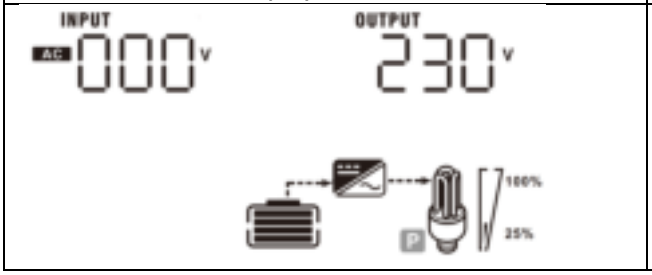	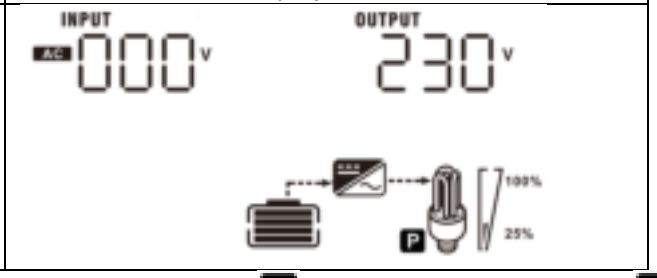

NOTE: Master and slave units are randomly defined. If it is master the icon P blinks, if it is slave the icon P normally on.

Step 4: Switch on all AC breakers of Line wires in AC input. It's better to have all inverters connect to utility at the same time. If detecting AC connection, they will work normally.

LCD display in Master unit	LCD display in Slave unit
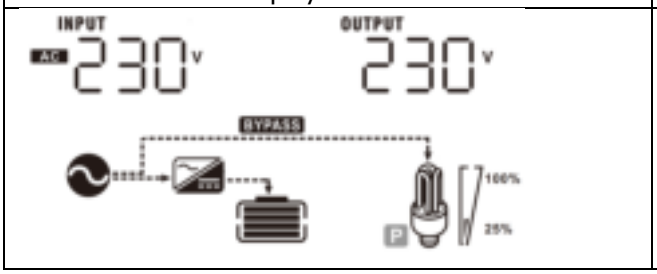	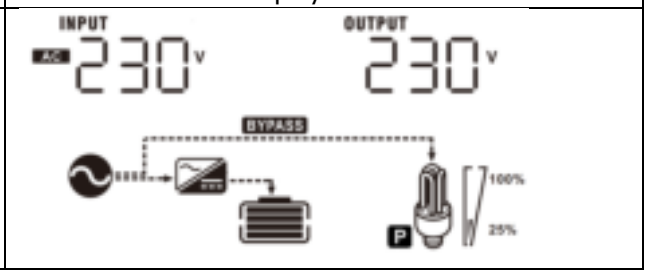

Step 5: If there is no more fault alarm, the parallel system is completely installed.
Step 6: Please switch on all breakers of Line wires in load side. This system will start to provide power to the load.

9. Trouble shooting

Situation		Solution
Fault Code	Fault Event Description	
24	Host data loss	1. Check if communication cables are connected well and restart the inverter. 2. If the problem remains, please contact your installer.
25	Synchronization data loss	1. Check if communication cables are connected well and restart the inverter. 2. If the problem remains, please contact your installer.
27	Firmware version inconsistent	1. Update all inverter firmware to the same version. 2. Check the version of each inverter via LCD setting and make sure the CPU versions are same. If not, please contact your installer to provide the firmware to update. 3. After updating, if the problem still remains, please contact your installer.

Situation		Solution
Warning Code	Warning Event Description	
16	CAN communication loss	1. Check if communication cables are connected well and restart the inverter. 2. If the problem remains, please contact your installer.
17	AC output mode setting is different.	1. Switch off the inverter and check LCD setting #28. 2. For parallel system in single phase, make sure "PAL" is set on #28. 3. If the problem remains, please contact your installer.
18	The battery voltage of each inverter is not the same.	1. Make sure all inverters share same groups of batteries together. 2. Remove all loads and disconnect AC input and PV input. Then, check battery voltage of all inverters. If the values from all inverters are close, please check if all battery cables are the same length and same material type. Otherwise, please contact your installer to provide SOP to calibrate battery voltage of each inverter. 3. If the problem still remains, please contact your installer.

PowMr

SHENZHEN HEHEJIN INDUSTRIAL CO.,LTD

Tel/Fax: +86 755-28219903

Email: aftersale@ysolartech.com

Web: www.ysolartech.com

Add: Henggang Street, Longgang District, Shenzhen, Guangdong, China