MAG Series

Power Supply Unit

MAG A650GL
MAG A750GL PCIE5
MAG A750GL PCIE5 II
MAG A850GL PCIE5
MAG A850GL PCIE5 WHITE
MAG A850GL PCIE5 II
MAG A850GL PCIE5 TOY STORY EDITION

User Guide

English

Italiano

Deutsch

Język polski

Français

Português

Русский

Español

日本語

Türkçe

한국어

Čeština

繁體中文

Slovenčina

简体中文

Contents

Specifications 2
Dimensions 3
Number of Power Connectors 4
Detachable Connectors 5
Connectivity and Cable Lengths 6
PCIe 16 Pin Cable Installation 8

Specifications

850W					
Voltage	+5V	+3.3V	+12V	-12V	+5Vsb
Max load	20.0A	20.0A	70.5A	0.3A	2.5A
Combined power	110W		846W	3.6W	12.5W
Total Power	850W				
Regulation	±3%	±3%	±3%	±10%	±3%
Ripple & Noise	40mVp-p	40mVp-p	60mVp-p	80mVp-p	40mVp-p

750W					
Voltage	+5V	+3.3V	+12V	-12V	+5Vsb
Max load	20.0A	20.0A	62.0A	0.3A	2.5A
Combined power	110W		744W	3.6W	12.5W
Total Power	750W				
Regulation	±3%	±3%	±3%	±10%	±3%
Ripple & Noise	40mVp-p	40mVp-p	60mVp-p	80mVp-p	40mVp-p

650W					
Voltage	+5V	+3.3V	+12V	-12V	+5Vsb
Max load	20.0A	20.0A	54.0A	0.3A	2.5A
Combined power	100W		648W	3.6W	12.5W
Total Power	650W				
Regulation	±3%	±3%	±3%	±10%	±3%
Ripple & Noise	40mVp-p	40mVp-p	60mVp-p	80mVp-p	40mVp-p

Dimensions

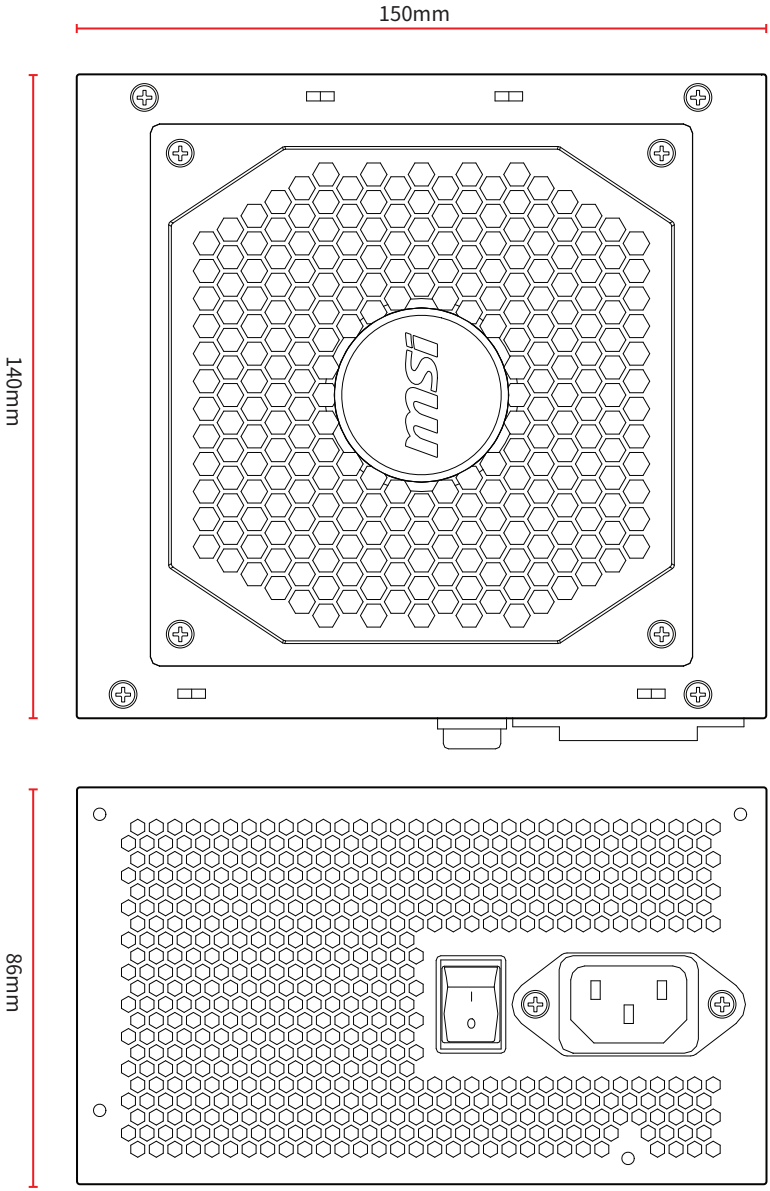

Number of Power Connectors

Power Connectors	A850GL	A750GL	A650GL
ATX12V (Motherboard) 20+4 pin	1	1	1
PCIe 16 pin	1	1	0
EPS12V (CPU) 4+4 pin	2	2	2
PCIe (VGA) 6+2 pin	4	3	4
SATA 15 pin	8	8	6
Peripheral (PATA) 4 pin	4	4	3
FDD 4 pin	1	1	1

Detachable Connectors

A850GL & A750GL

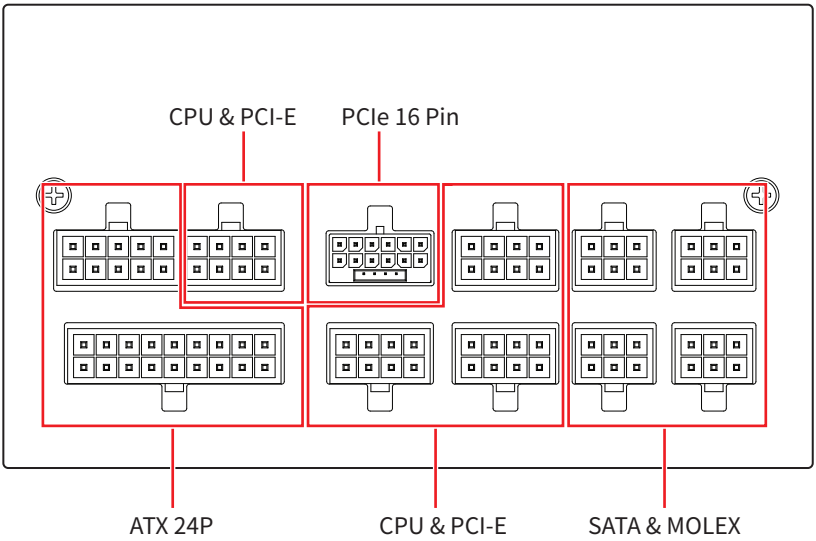

A650GL

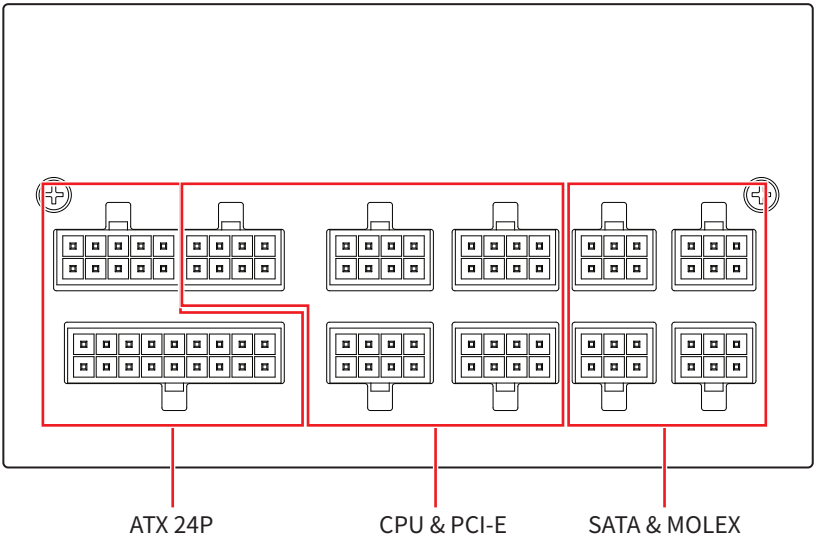

Connectivity and Cable Lengths

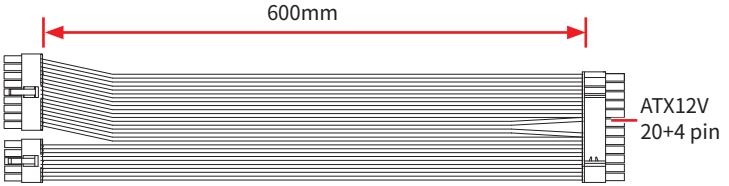

X 1

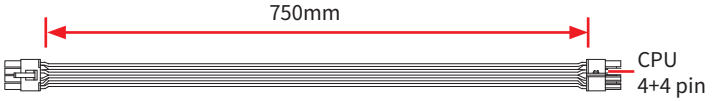

X 2

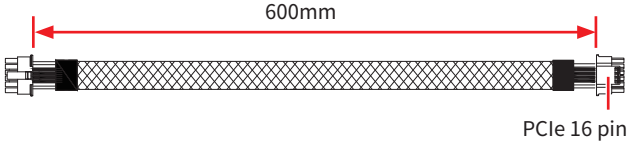

X 1

MAG A850GL PCIE5

MAG A850GL PCIE5 WHITE

MAG A850GL PCIE5 II

MAG A850GL PCIE5 TOY STORY EDITION

MAG A750GL PCIE5

MAG A750GL PCIE5 II

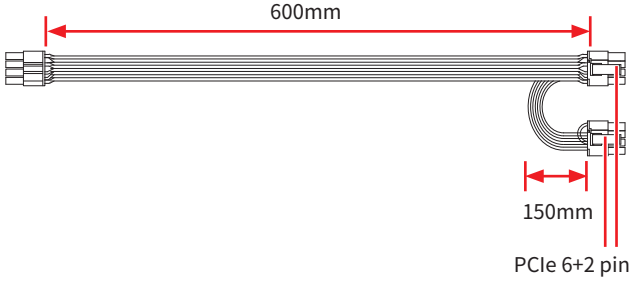

X 2

MAG A850GL PCIE5

MAG A850GL PCIE5 WHITE

MAG A850GL PCIE5 II

MAG A850GL PCIE5 TOY STORY EDITION

MAG A650GL

X 1

MAG A750GL PCIE5

MAG A750GL PCIE5 II

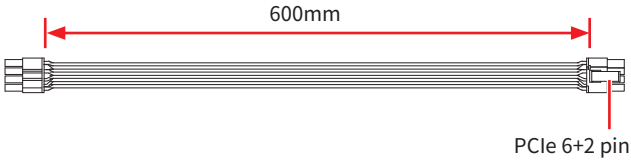

X 1

MAG A750GL PCIE5

MAG A750GL PCIE5 II

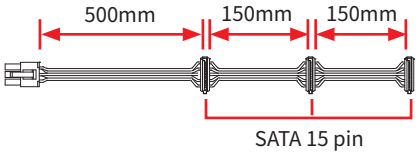

X 2

MAG A650GL

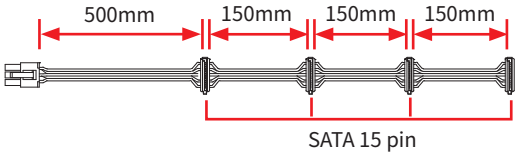

X 2

MAG A850GL PCIE5

MAG A850GL PCIE5 WHITE

MAG A850GL PCIE5 II

MAG A850GL PCIE5 TOY STORY EDITION

MAG A750GL PCIE5

MAG A750GL PCIE5 II

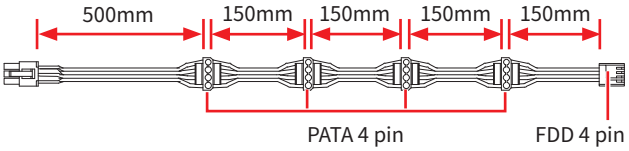

X 1

MAG A850GL PCIE5

MAG A850GL PCIE5 WHITE

MAG A850GL PCIE5 II

MAG A850GL PCIE5 TOY STORY EDITION

MAG A750GL PCIE5

MAG A750GL PCIE5 II

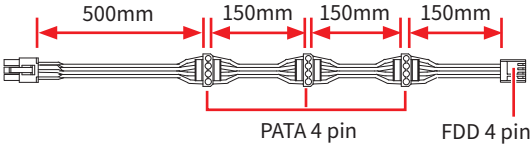

X 1

MAG A650GL

PCIe 16 Pin Cable Installation

CAUTION

Please fully insert the cable before use.

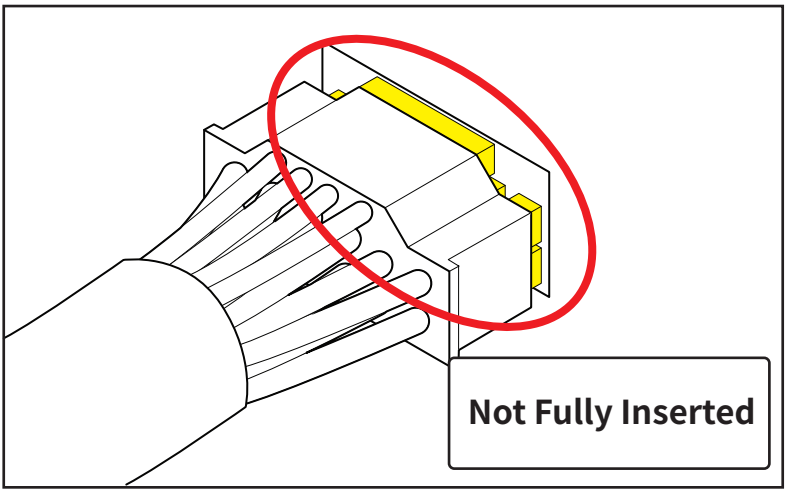

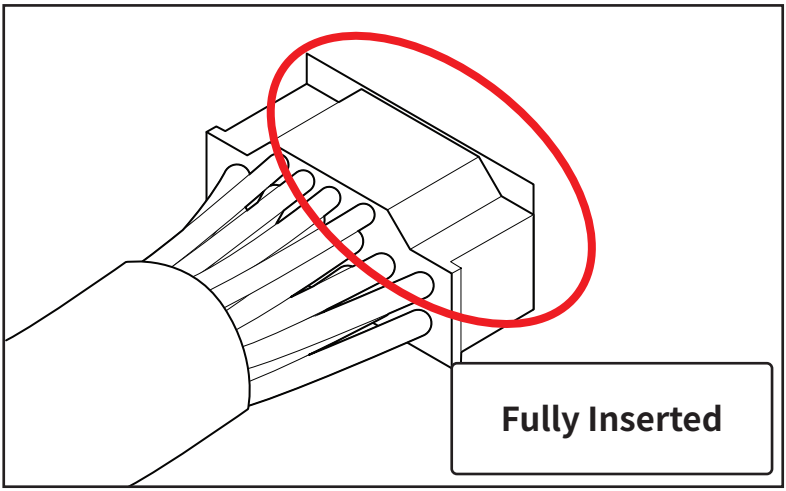

Inhalt

Spezifikationen 2
Abmessungen 3
Zahl der Stromanschlüsse 4
Lösbare Steckverbinder 5
Konnektivität und Kabellängen 6
Installation des PCIe 16 Pin Kabels 8

Spezifikationen

850W					
Spannung	+5V	+3,3V	+12V	-12V	+5Vsb
Max. Belastung	20,0A	20,0A	70,5A	0,3A	2,5A
Kombinierte Leistung	110W		846W	3,6W	12,5W
Gesamtleistung	850W				
Lastregelung	±3%	±3%	±3%	±10%	±3%
Restwelligkeit	40mVp-p	40mVp-p	60mVp-p	80mVp-p	40mVp-p

750W					
Spannung	+5V	+3,3V	+12V	-12V	+5Vsb
Max. Belastung	20,0A	20,0A	62,0A	0,3A	2,5A
Kombinierte Leistung	110W		744W	3,6W	12,5W
Gesamtleistung	750W				
Lastregelung	±3%	±3%	±3%	±10%	±3%
Restwelligkeit	40mVp-p	40mVp-p	60mVp-p	80mVp-p	40mVp-p

650W					
Spannung	+5V	+3,3V	+12V	-12V	+5Vsb
Max. Belastung	20,0A	20,0A	54,0A	0,3A	2,5A
Kombinierte Leistung	100W		648W	3,6W	12,5W
Gesamtleistung	650W				
Lastregelung	±3%	±3%	±3%	±10%	±3%
Restwelligkeit	40mVp-p	40mVp-p	60mVp-p	80mVp-p	40mVp-p

Abmessungen

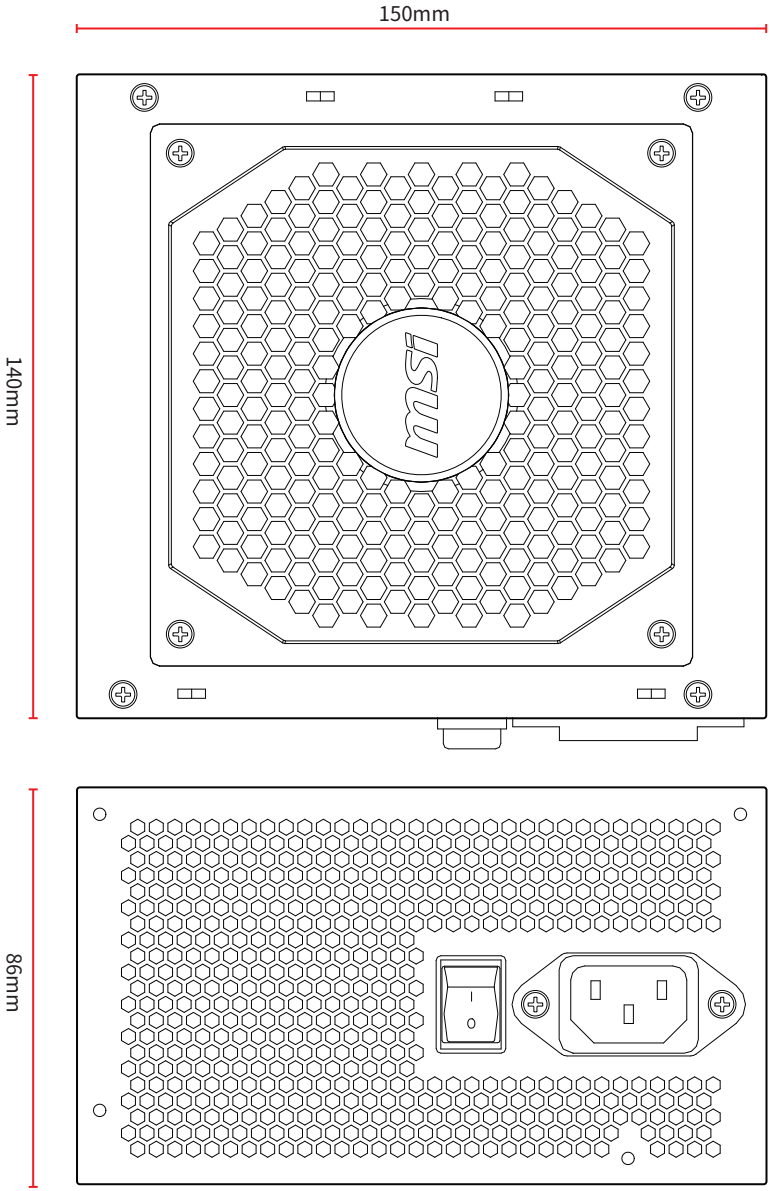

Zahl der Stromanschlüsse

Stromanschlüsse	A850GL	A750GL	A650GL
ATX12V (Motherboard) 20+4 Pin	1	1	1
PCIe 16 Pin	1	1	0
EPS12V (CPU) 4+4 Pin	2	2	2
PCIe (VGA) 6+2 Pin	4	3	4
SATA 15 Pin	8	8	6
Peripheriegerät (PATA) 4 Pin	4	4	3
Diskettenlaufwerk (FDD) 4 Pin	1	1	1

Lösbare Steckverbinder

A850GL & A750GL

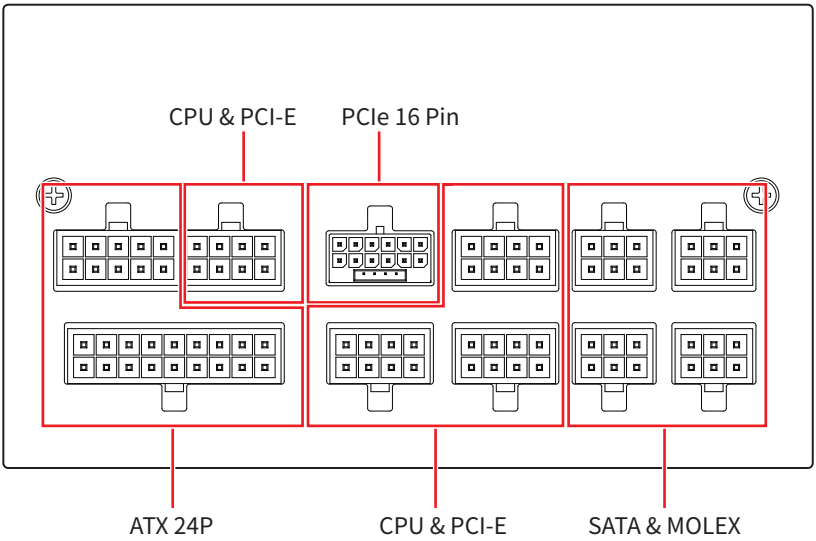

A650GL

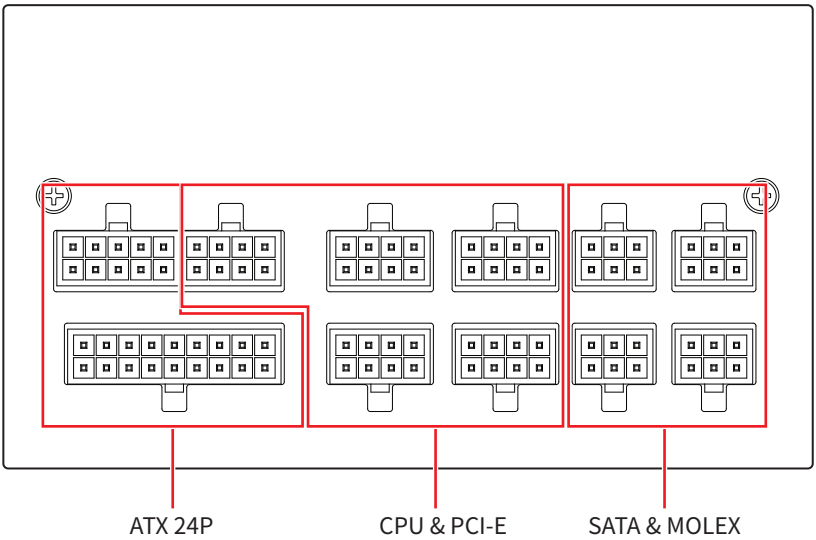

Konnektivität und Kabellängen

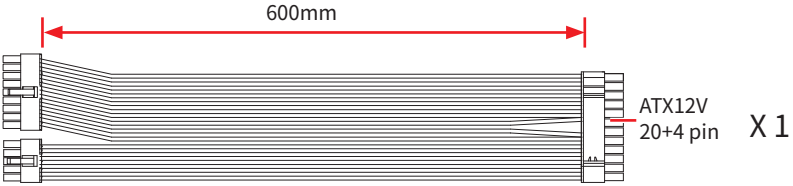

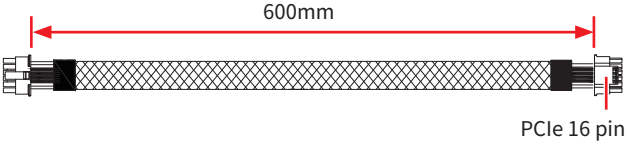

X 1

MAG A850GL PCIE5

MAG A850GL PCIE5 WHITE

MAG A850GL PCIE5 II

MAG A850GL PCIE5 TOY STORY EDITION

MAG A750GL PCIE5

MAG A750GL PCIE5 II

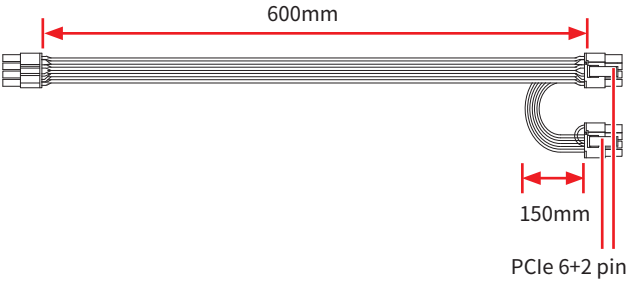

X 2

MAG A850GL PCIE5

MAG A850GL PCIE5 WHITE

MAG A850GL PCIE5 II

MAG A850GL PCIE5 TOY STORY EDITION

MAG A650GL

X 1

MAG A750GL PCIE5

MAG A750GL PCIE5 II

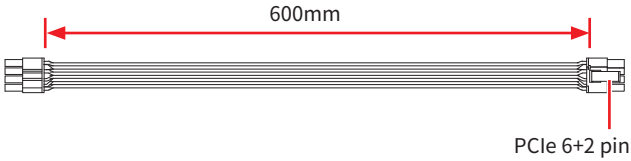

X 1

MAG A750GL PCIE5

MAG A750GL PCIE5 II

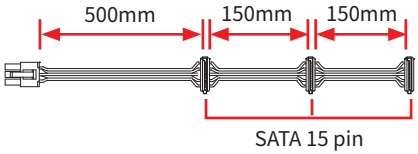

X 2

MAG A650GL

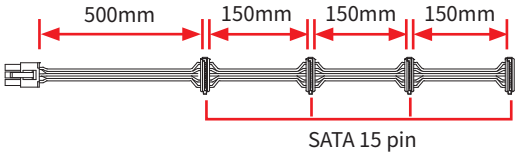

X 2

MAG A850GL PCIE5

MAG A850GL PCIE5 WHITE

MAG A850GL PCIE5 II

MAG A850GL PCIE5 TOY STORY EDITION

MAG A750GL PCIE5

MAG A750GL PCIE5 II

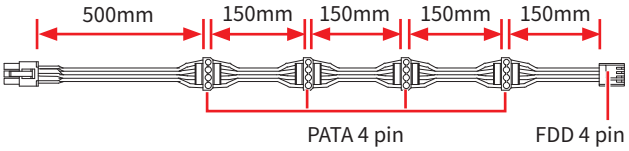

X 1

MAG A850GL PCIE5

MAG A850GL PCIE5 WHITE

MAG A850GL PCIE5 II

MAG A850GL PCIE5 TOY STORY EDITION

MAG A750GL PCIE5

MAG A750GL PCIE5 II

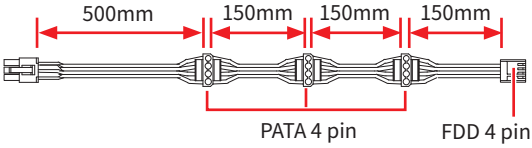

X 1

MAG A650GL

Installation des PCIe 16 Pin Kabels

ACHTUNG

Vor der ersten Verwendung führen Sie bitte das Kabel vollständig in eine der Buchsen ein.

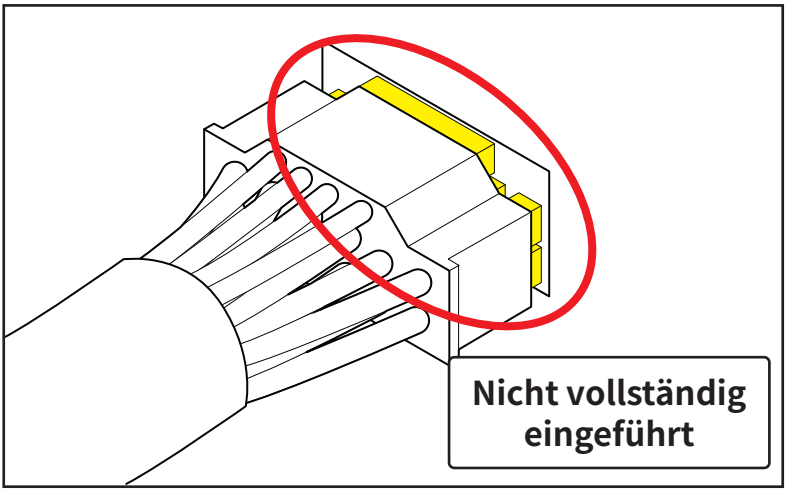

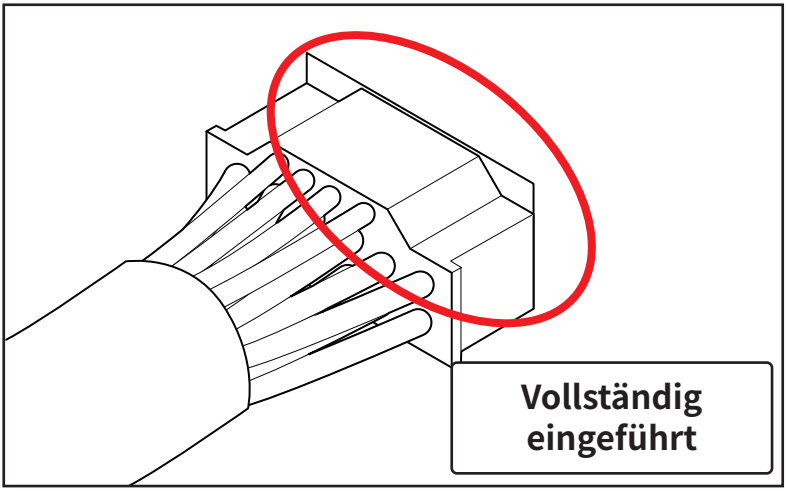

Contents

Caractéristiques 2
Dimensions 3
Nombre de connecteurs d' alimentation 4
Connecteurs détachables 5
Connectique et longueur des câbles 6
Installation du câble PCIe 16 broches 8

Caractéristiques

850 W					
Tension	+5 V	+3,3 V	+12 V	-12 V	+5 Vsb
Charge maximale	20,0 A	20,0 A	70,5 A	0,3 A	2,5 A
Puissance combinée	110 W		846 W	3,6 W	12,5 W
Puissance totale	850 W				
Régulation	±3 %	±3 %	±3 %	±10 %	±3 %
Ondulation et bruit	40 mVp-p	40 mVp-p	60 mVp-p	80 mVp-p	40 mVp-p

750 W					
Tension	+5 V	+3,3 V	+12 V	-12 V	+5 Vsb
Charge maximale	20,0 A	20,0 A	62,0 A	0,3 A	2,5 A
Puissance combinée	110 W		744 W	3,6 W	12,5 W
Puissance totale	750 W				
Régulation	±3 %	±3 %	±3 %	±10 %	±3 %
Ondulation et bruit	40 mVp-p	40 mVp-p	60 mVp-p	80 mVp-p	40 mVp-p

650 W					
Tension	+5 V	+3,3 V	+12 V	-12 V	+5 Vsb
Charge maximale	20,0 A	20,0 A	54,0 A	0,3 A	2,5 A
Puissance combinée	100 W		648 W	3,6 W	12,5 W
Puissance totale	650 W				
Régulation	±3 %	±3 %	±3 %	±10 %	±3 %
Ondulation et bruit	40 mVp-p	40 mVp-p	60 mVp-p	80 mVp-p	40 mVp-p

Dimensions

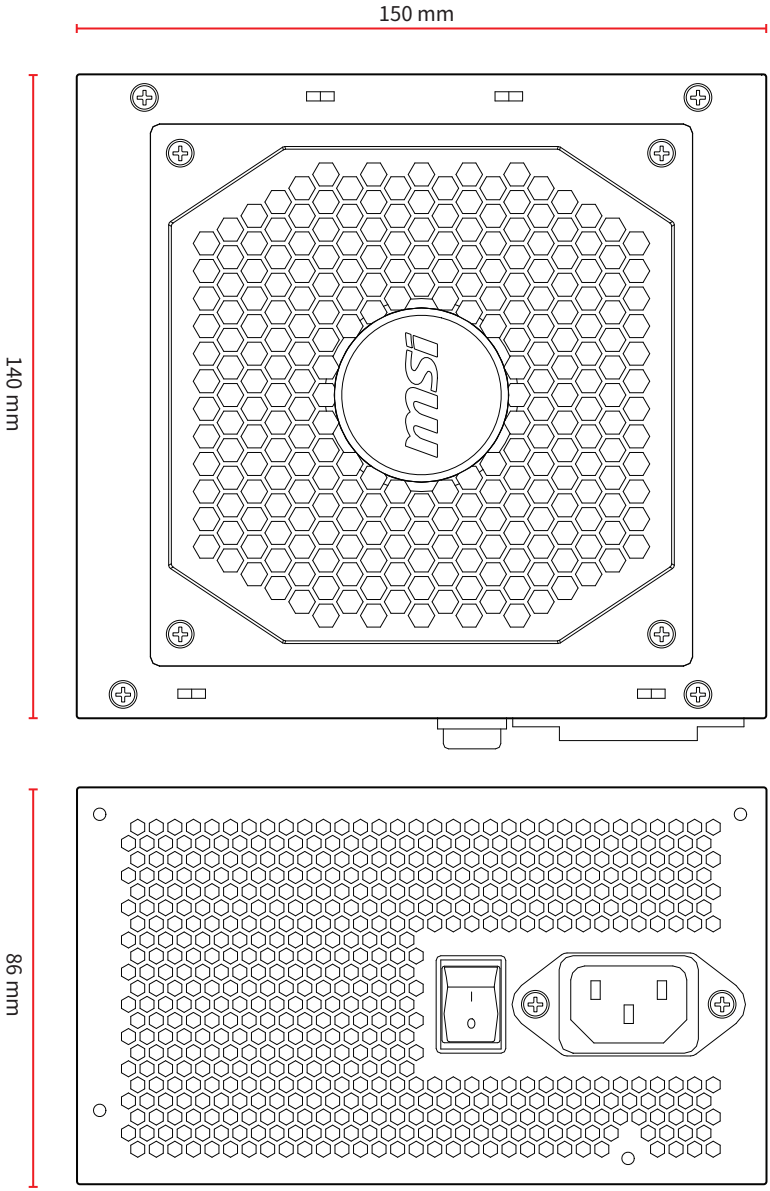

Nombre de connecteurs d' alimentation

Connecteurs d' alimentation	A850GL	A750GL	A650GL
ATX12V (Carte mère) 20+4 broches	1	1	1
PCIe 16 broches	1	1	0
EPS12V (CPU) 4+4 broches	2	2	2
PCIe (VGA) 6+2 broches	4	3	4
SATA 15 broches	8	8	6
Périphérique (PATA) 4 broches	4	4	3
FDD 4 broches	1	1	1

Connecteurs détachables

A850GL & A750GL

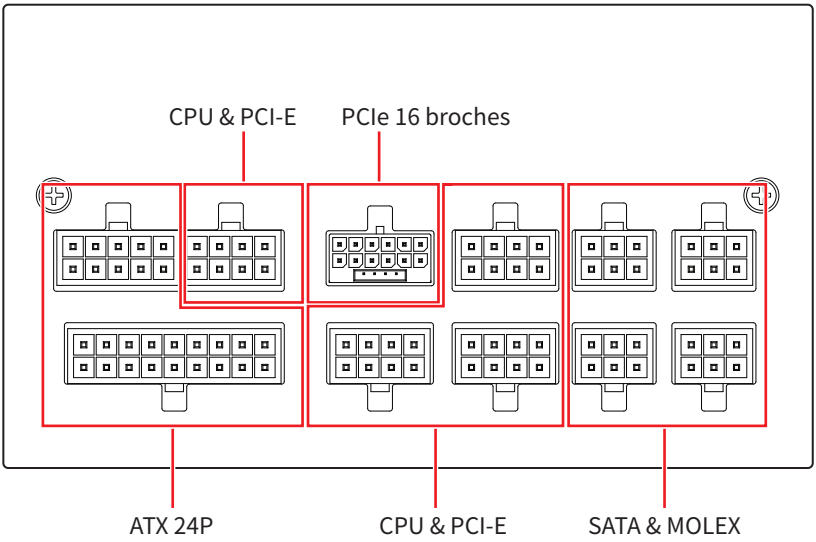

A650GL

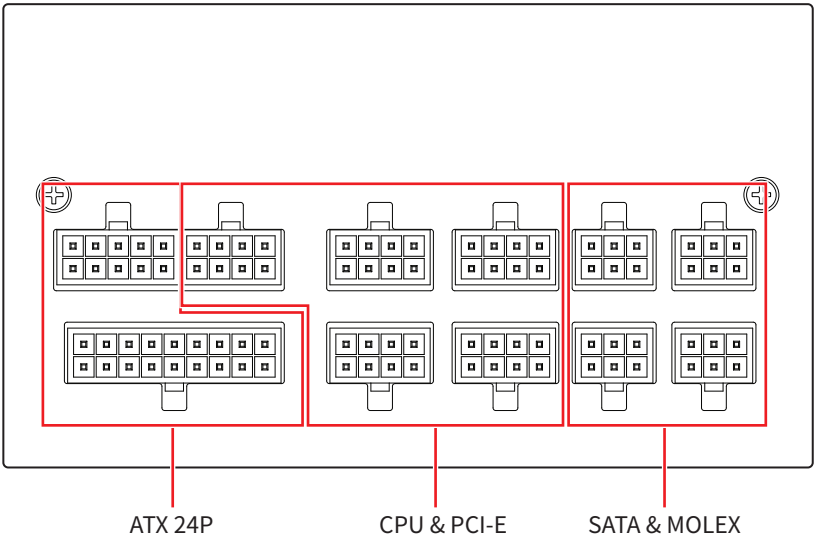

Connectique et longueur des câbles

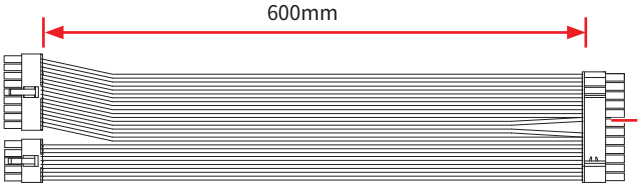

X 1

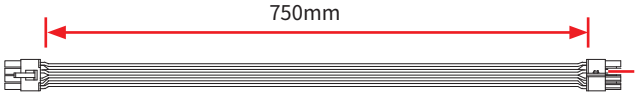

X 2

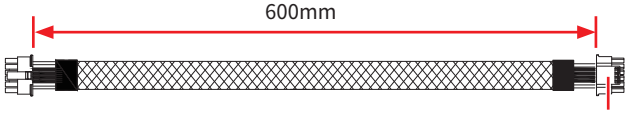

X 1

MAG A850GL PCIE5

MAG A850GL PCIE5 WHITE

MAG A850GL PCIE5 II

MAG A850GL PCIE5 TOY STORY EDITION

MAG A750GL PCIE5

MAG A750GL PCIE5 II

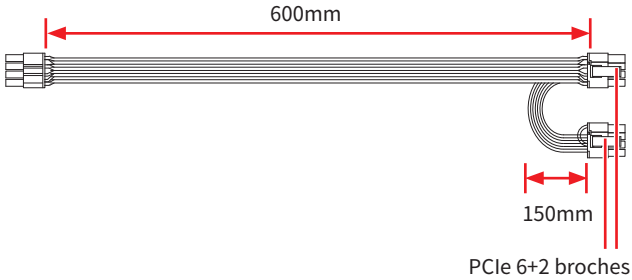

X 2

MAG A850GL PCIE5

MAG A850GL PCIE5 WHITE

MAG A850GL PCIE5 II

MAG A850GL PCIE5 TOY STORY EDITION

MAG A650GL

X 1

MAG A750GL PCIE5

MAG A750GL PCIE5 II

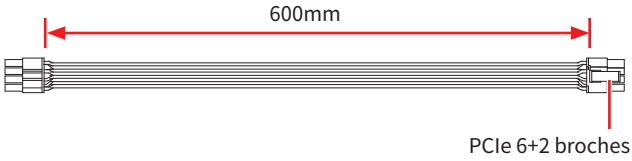

X 1

MAG A750GL PCIE5

MAG A750GL PCIE5 II

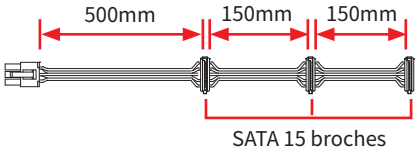

X 2

MAG A650GL

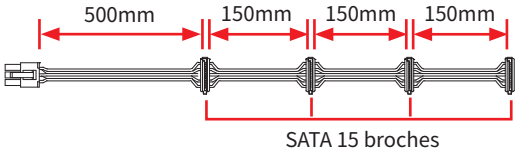

X 2

MAG A850GL PCIE5

MAG A850GL PCIE5 WHITE

MAG A850GL PCIE5 II

MAG A850GL PCIE5 TOY STORY EDITION

MAG A750GL PCIE5

MAG A750GL PCIE5 II

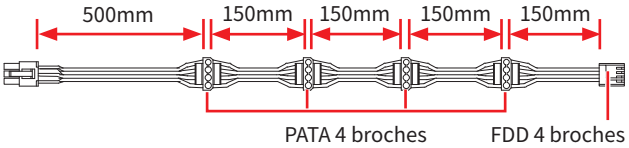

X 1

MAG A850GL PCIE5

MAG A850GL PCIE5 WHITE

MAG A850GL PCIE5 II

MAG A850GL PCIE5 TOY STORY EDITION

MAG A750GL PCIE5

MAG A750GL PCIE5 II

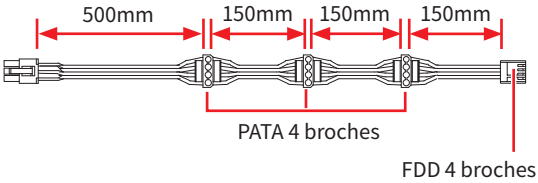

X 1

MAG A650GL

Installation du câble PCIe 16 broches

ATTENTION

Veuillez totalement insérer le câble avant de l' utiliser.

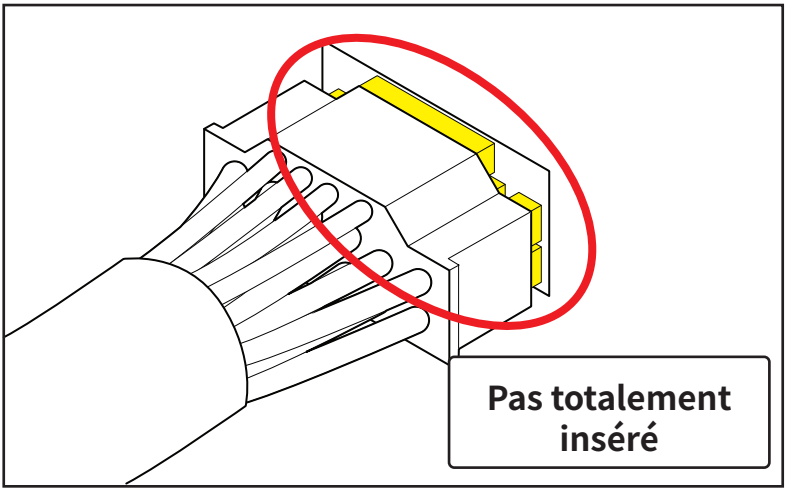

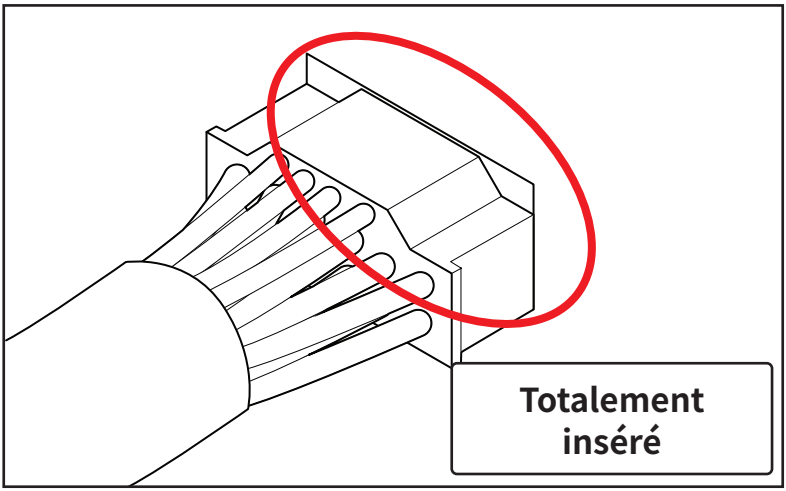

Содержание

Спецификация 2
Размеры 3
Кол-во силовых соединителей 4
Кабельные интерфейсы 5
Подключение и длина кабелей 6
Подключение кабеля PCIe 16 Pin 8

Спецификация

850W					
Напряжение	+5V	+3.3V	+12V	-12V	+5Vsb
Максимальная загрузка	20.0A	20.0A	70.5A	0.3A	2.5A
Комбинированная мощность	110W		846W	3.6W	12.5W
Общая мощность	850W				
Регулирование	±3%	±3%	±3%	±10%	±3%
Пульсации и шумы	40mVp-p	40mVp-p	60mVp-p	80mVp-p	40mVp-p

750W					
Напряжение	+5V	+3.3V	+12V	-12V	+5Vsb
Максимальная загрузка	20.0A	20.0A	62.0A	0.3A	2.5A
Комбинированная мощность	110W		744W	3.6W	12.5W
Общая мощность	750W				
Регулирование	±3%	±3%	±3%	±10%	±3%
Пульсации и шумы	40mVp-p	40mVp-p	60mVp-p	80mVp-p	40mVp-p

650W					
Напряжение	+5V	+3.3V	+12V	-12V	+5Vsb
Максимальная загрузка	20.0A	20.0A	54.0A	0.3A	2.5A
Комбинированная мощность	100W		648W	3.6W	12.5W
Общая мощность	650W				
Регулирование	±3%	±3%	±3%	±10%	±3%
Пульсации и шумы	40mVp-p	40mVp-p	60mVp-p	80mVp-p	40mVp-p

Размеры

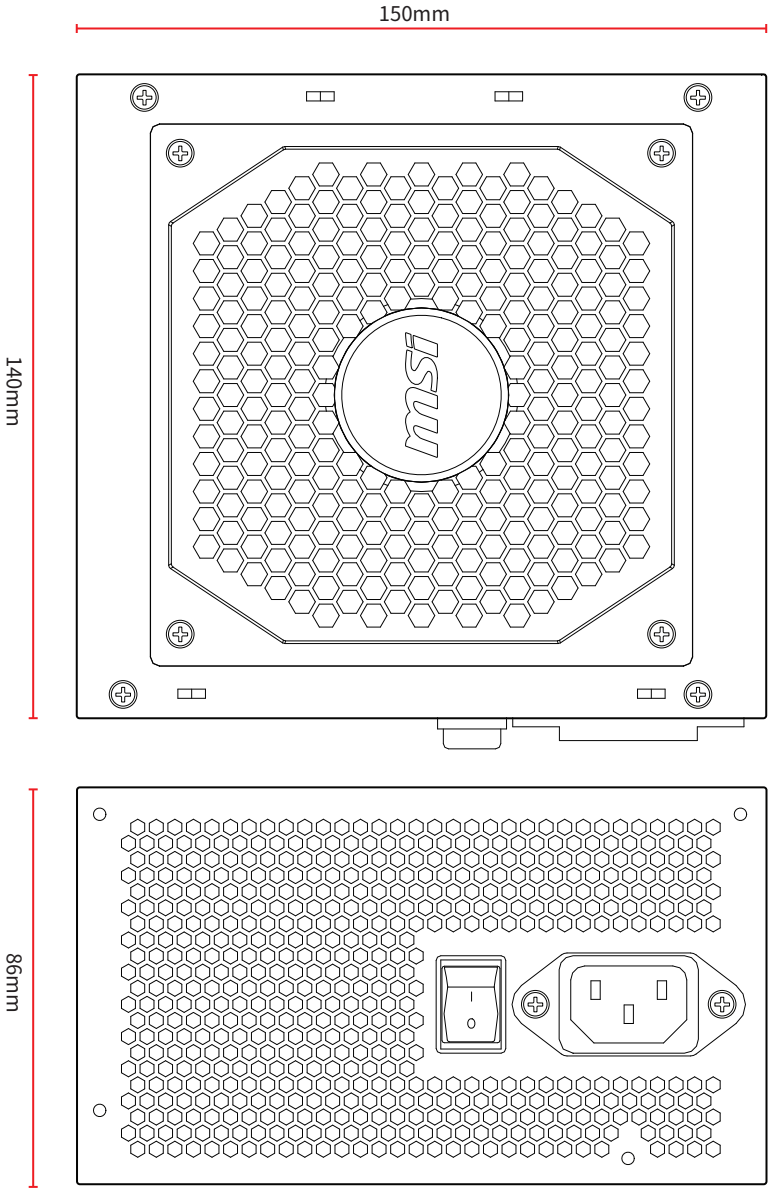

Кол-во силовых соединителей

Разъем питания	A850GL	A750GL	A650GL
ATX12V (Материнская плата) 20+4 pin	1	1	1
PCIe 16 pin	1	1	0
EPS12V (CPU) 4+4 pin	2	2	2
PCIe (VGA) 6+2 pin	4	3	4
SATA 15 pin	8	8	6
Периферийные устройства (PATA) 4 pin	4	4	3
FDD 4 pin	1	1	1

Кабельные интерфейсы

A850GL & A750GL

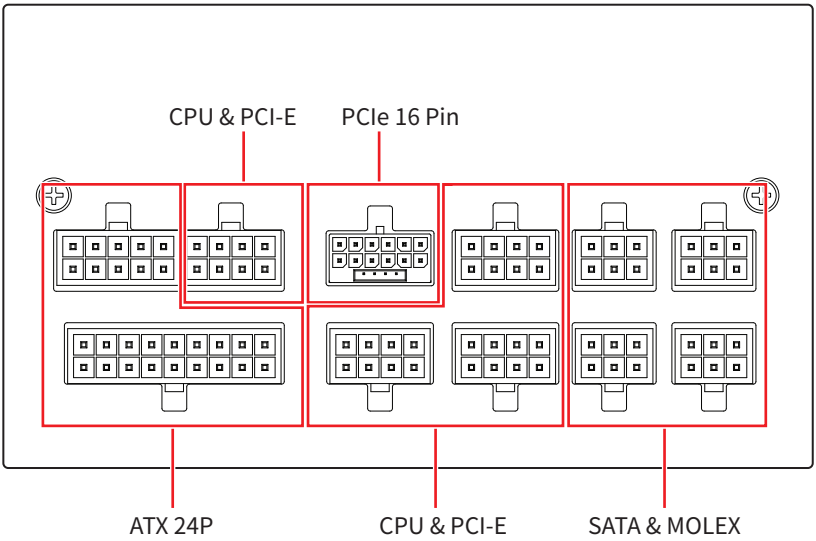

A650GL

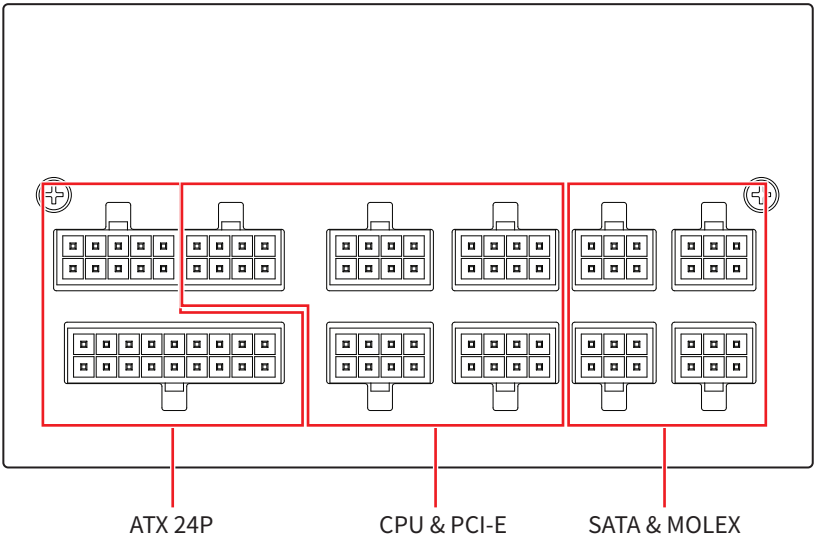

Подключение и длина кабелей

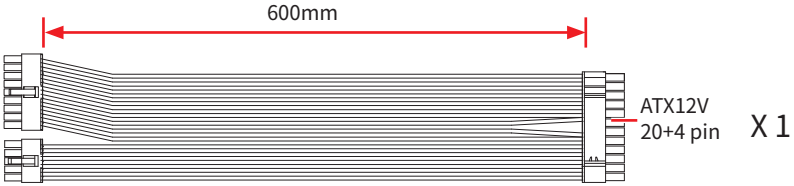

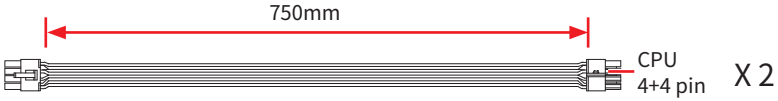

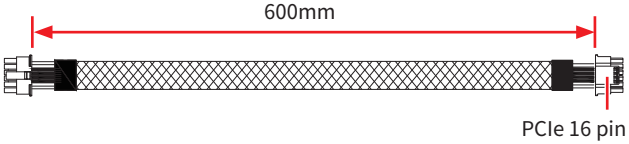

X 1

MAG A850GL PCIE5

MAG A850GL PCIE5 WHITE

MAG A850GL PCIE5 II

MAG A850GL PCIE5 TOY STORY EDITION

MAG A750GL PCIE5

MAG A750GL PCIE5 II

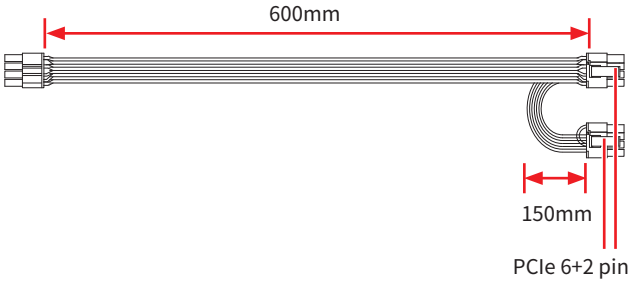

X 2

MAG A850GL PCIE5

MAG A850GL PCIE5 WHITE

MAG A850GL PCIE5 II

MAG A850GL PCIE5 TOY STORY EDITION

MAG A650GL

X 1

MAG A750GL PCIE5

MAG A750GL PCIE5 II

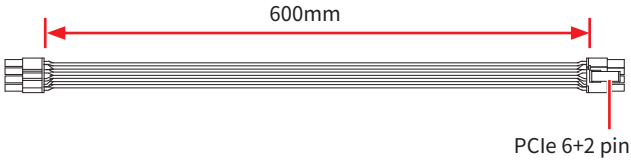

X 1

MAG A750GL PCIE5

MAG A750GL PCIE5 II

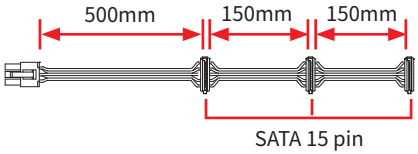

X 2

MAG A650GL

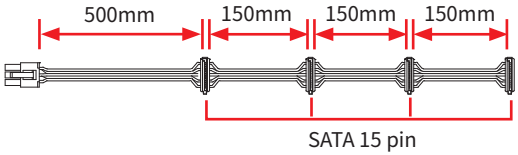

X 2

MAG A850GL PCIE5

MAG A850GL PCIE5 WHITE

MAG A850GL PCIE5 II

MAG A850GL PCIE5 TOY STORY EDITION

MAG A750GL PCIE5

MAG A750GL PCIE5 II

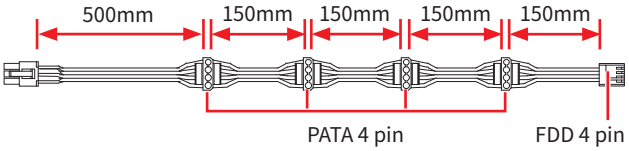

X 1

MAG A850GL PCIE5

MAG A850GL PCIE5 WHITE

MAG A850GL PCIE5 II

MAG A850GL PCIE5 TOY STORY EDITION

MAG A750GL PCIE5

MAG A750GL PCIE5 II

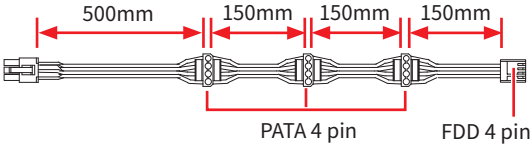

X 1

MAG A650GL

Подключение кабеля PCIe 16 Pin

Внимание

Перед использованием убедитесь, что кабель полностью вставлен.

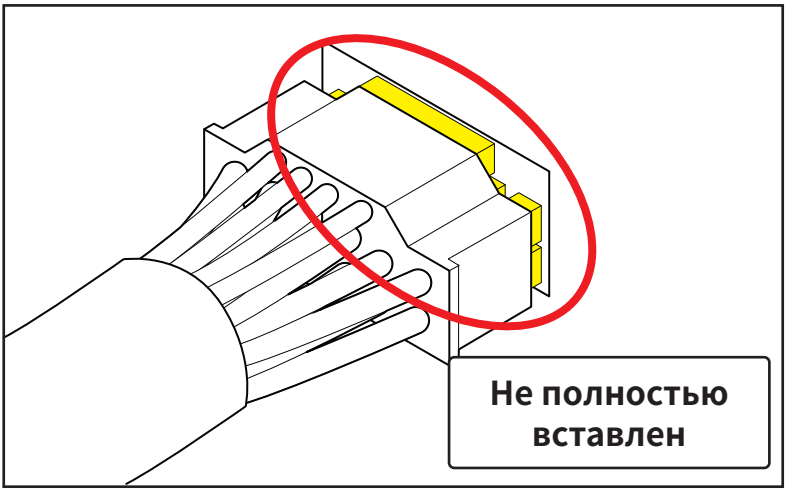

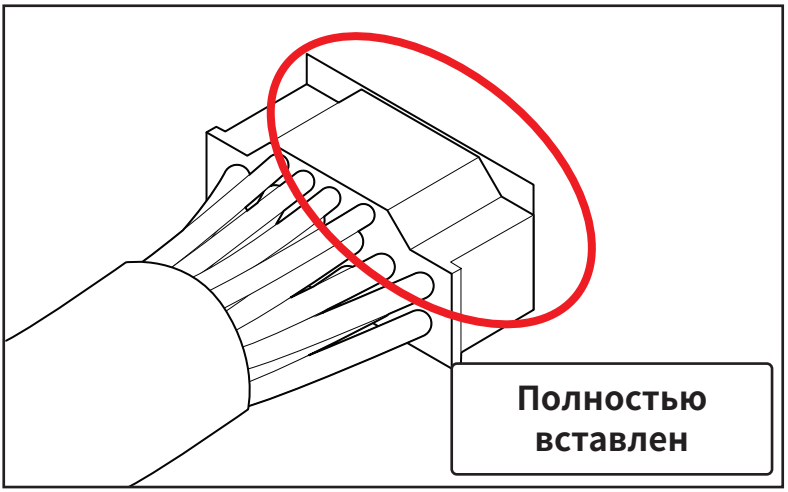

目次

仕様 2
外形寸法 3
電源コネクター数 4
電源コネクター配置図 5
コネクター & ケーブル長さ 6
PCIe 16ピン ケーブルの取り付け 8

仕様

850W					
電圧	+5V	+3.3V	+12V	-12V	+5Vsb
最大電流	20.0A	20.0A	70.5A	0.3A	2.5A
最大電力	110W		846W	3.6W	12.5W
最大総合電力	850W				
レギュレーション	±3%	±3%	±3%	±10%	±3%
リップルノイズ	40mVp-p	40mVp-p	60mVp-p	80mVp-p	40mVp-p

750W					
電圧	+5V	+3.3V	+12V	-12V	+5Vsb
最大電流	20.0A	20.0A	62.0A	0.3A	2.5A
最大電力	110W		744W	3.6W	12.5W
最大総合電力	750W				
レギュレーション	±3%	±3%	±3%	±10%	±3%
リップルノイズ	40mVp-p	40mVp-p	60mVp-p	80mVp-p	40mVp-p

650W					
電圧	+5V	+3.3V	+12V	-12V	+5Vsb
最大電流	20.0A	20.0A	54.0A	0.3A	2.5A
最大電力	100W		648W	3.6W	12.5W
最大総合電力	650W				
レギュレーション	±3%	±3%	±3%	±10%	±3%
リップルノイズ	40mVp-p	40mVp-p	60mVp-p	80mVp-p	40mVp-p

外形寸法

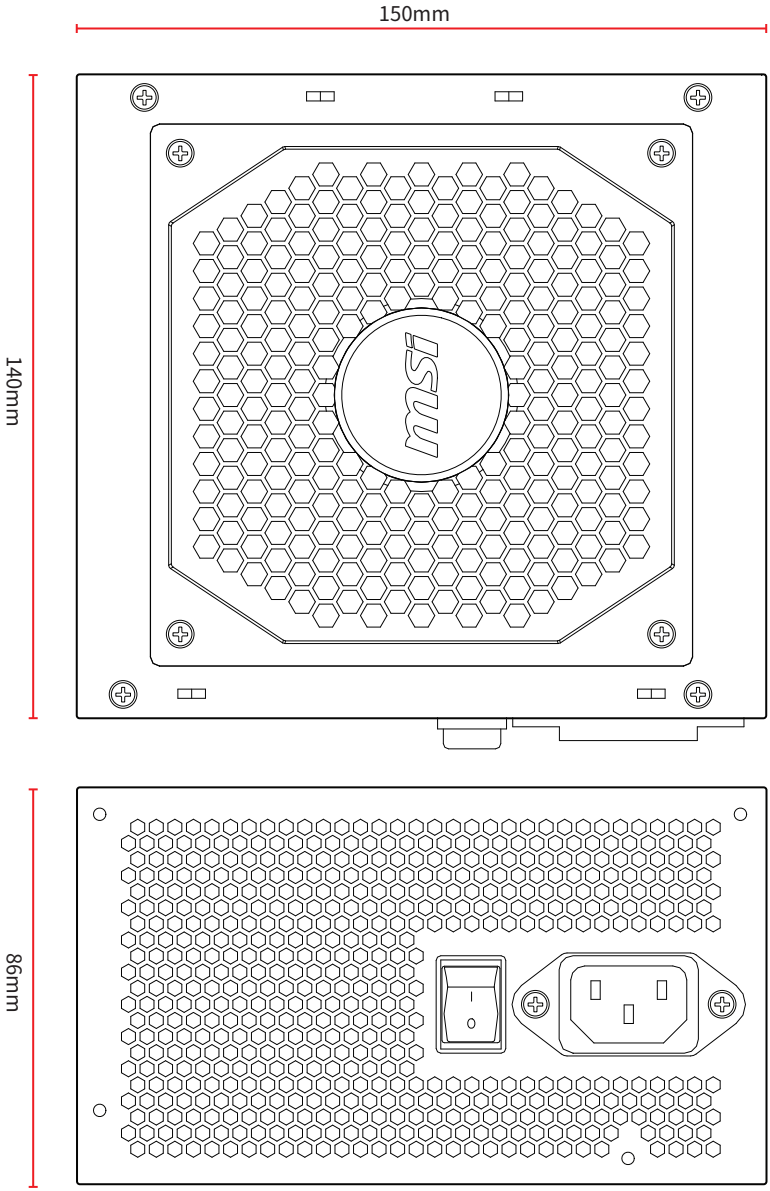

電源コネクター数

電源コネクター	A850GL	A750GL	A650GL
ATX12V (マザーボード) 20+4ピン	1	1	1
PCIe 16ピン	1	1	0
EPS12V (CPU) 4+4ピン	2	2	2
PCIe (VGA) 6+2ピン	4	3	4
SATA 15ピン	8	8	6
ペリフェラル (PATA) 4ピン	4	4	3
FDD 4ピン	1	1	1

電源コネクター配置図

A850GL & A750GL

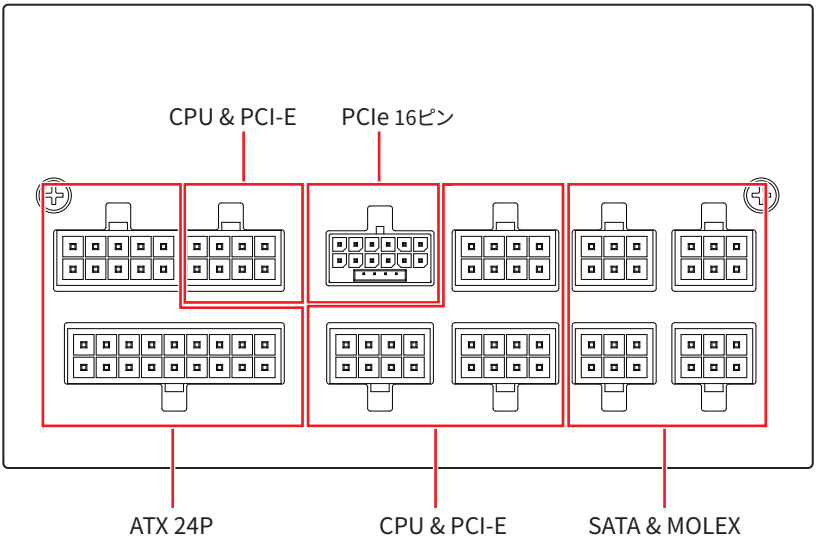

A650GL

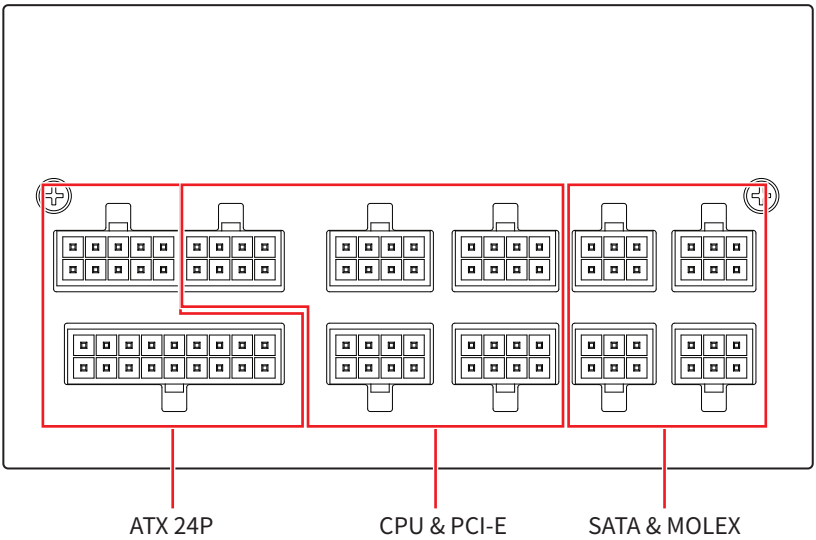

コネクター＆ケーブル長さ

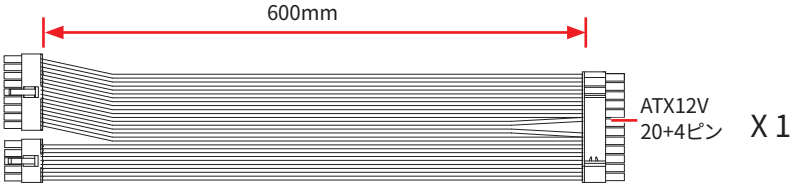

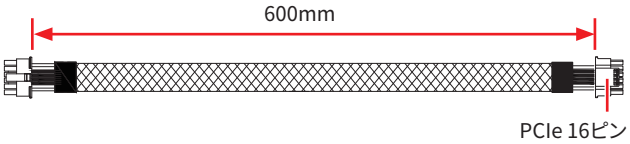

X 1

MAG A850GL PCIE5

MAG A850GL PCIE5 WHITE

MAG A850GL PCIE5 II

MAG A850GL PCIE5 TOY STORY EDITION

MAG A750GL PCIE5

MAG A750GL PCIE5 II

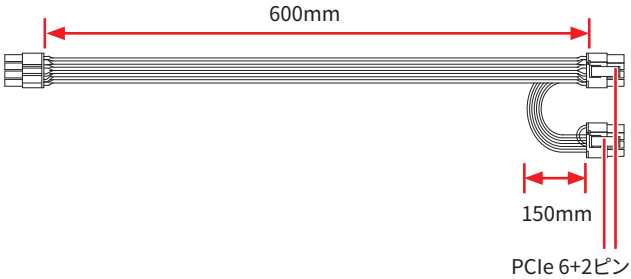

X 2

MAG A850GL PCIE5

MAG A850GL PCIE5 WHITE

MAG A850GL PCIE5 II

MAG A850GL PCIE5 TOY STORY EDITION

MAG A650GL

X 1

MAG A750GL PCIE5

MAG A750GL PCIE5 II

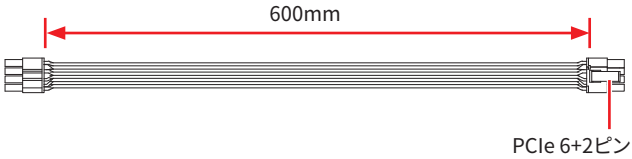

X 1

MAG A750GL PCIE5

MAG A750GL PCIE5 II

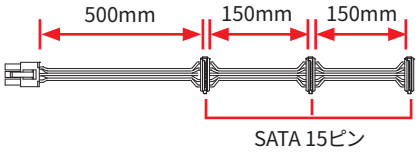

X 2

MAG A650GL

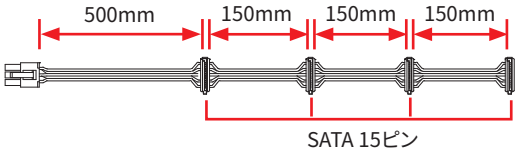

X 2

MAG A850GL PCIE5

MAG A850GL PCIE5 WHITE

MAG A850GL PCIE5 II

MAG A850GL PCIE5 TOY STORY EDITION

MAG A750GL PCIE5

MAG A750GL PCIE5 II

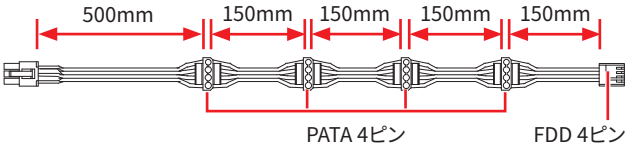

X 1

MAG A850GL PCIE5

MAG A850GL PCIE5 WHITE

MAG A850GL PCIE5 II

MAG A850GL PCIE5 TOY STORY EDITION

MAG A750GL PCIE5

MAG A750GL PCIE5 II

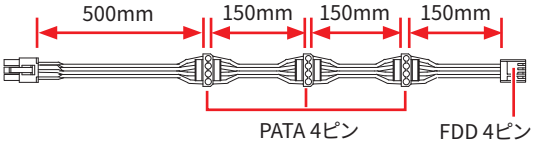

X 1

MAG A650GL

PCIe 16ピン ケーブルの取り付け

警告

ケーブルを奥までしっかりと挿し込んでください。

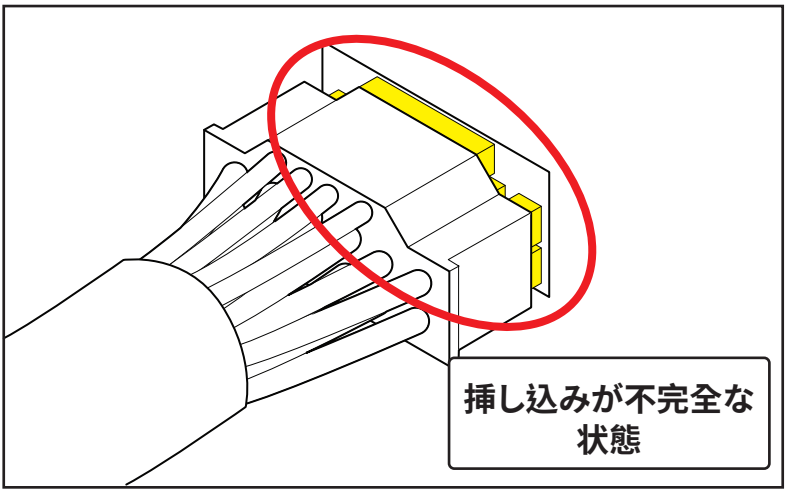

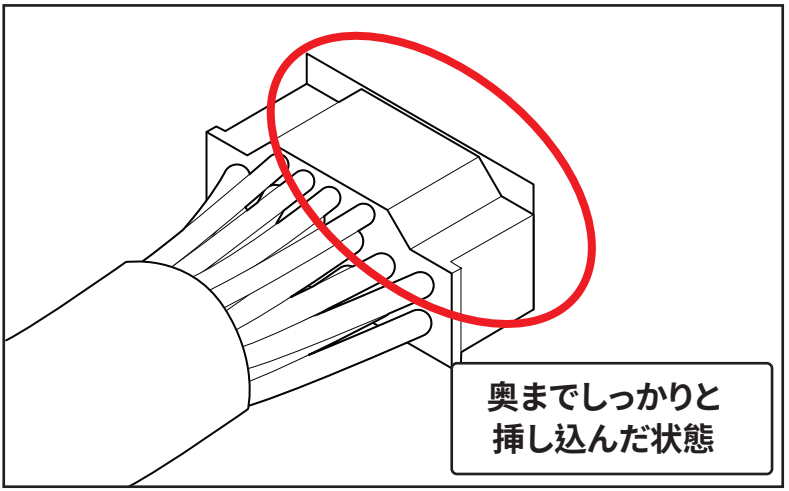

목차

사양 2
치수 3
전원 커넥터 수 4
탈착식 커넥터 5
연결 및 케이블 길이 6
PCIe 16 핀케이블 설치 8

사양

850W					
전압	+5V	+3.3V	+12V	-12V	+5Vsb
최대 하중	20.0A	20.0A	70.5A	0.3A	2.5A
결합 전원	110W		846W	3.6W	12.5W
토탈 전원	850W				
규격	±3%	±3%	±3%	±10%	±3%
리플 & 노이즈	40mVp-p	40mVp-p	60mVp-p	80mVp-p	40mVp-p

750W					
전압	+5V	+3.3V	+12V	-12V	+5Vsb
최대 하중	20.0A	20.0A	62.0A	0.3A	2.5A
결합 전원	110W		744W	3.6W	12.5W
토탈 전원	750W				
규격	±3%	±3%	±3%	±10%	±3%
리플 & 노이즈	40mVp-p	40mVp-p	60mVp-p	80mVp-p	40mVp-p

650W					
전압	+5V	+3.3V	+12V	-12V	+5Vsb
최대 하중	20.0A	20.0A	54.0A	0.3A	2.5A
결합 전원	100W		648W	3.6W	12.5W
토탈 전원	650W				
규격	±3%	±3%	±3%	±10%	±3%
리플 & 노이즈	40mVp-p	40mVp-p	60mVp-p	80mVp-p	40mVp-p

치수

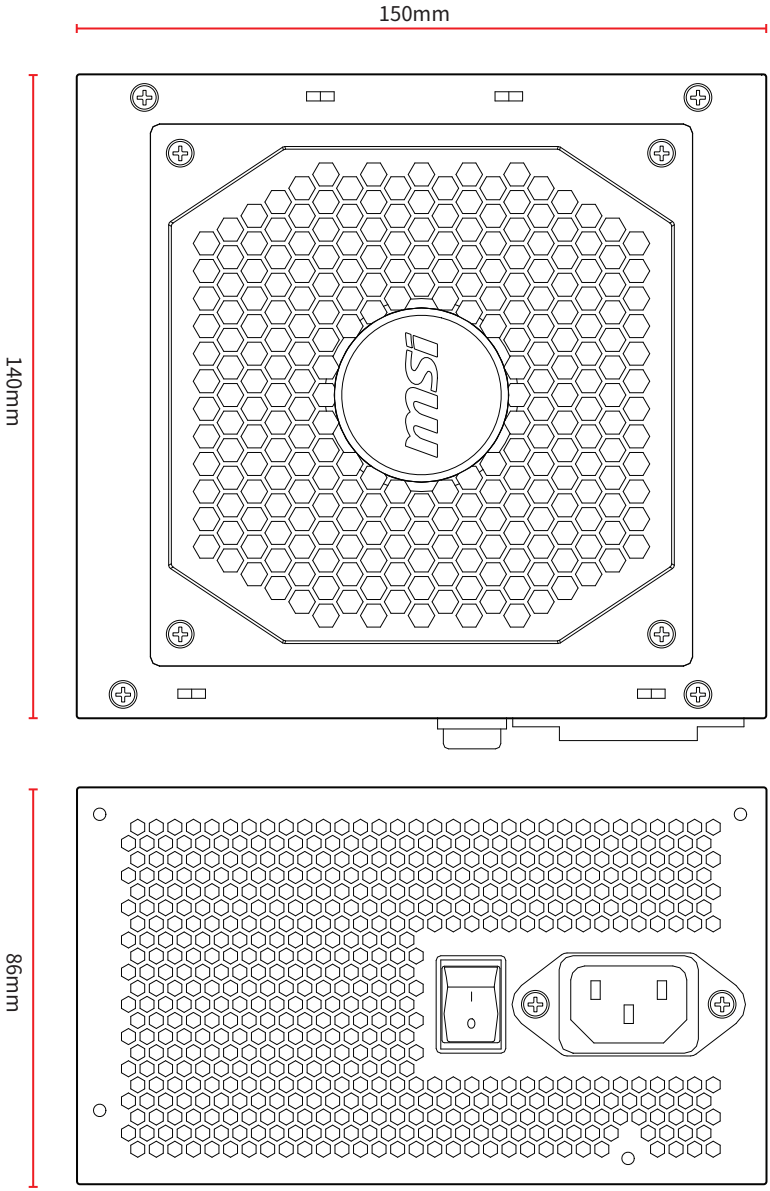

전원 커넥터 수

전원 커넥터	A850GL	A750GL	A650GL
ATX12V (메인보드) 20+4 핀	1	1	1
PCIe 16 핀	1	1	0
EPS12V (CPU) 4+4 핀	2	2	2
PCIe (VGA) 6+2 핀	4	3	4
SATA 15 핀	8	8	6
주변기기(PATA) 4핀	4	4	3
FDD 4 핀	1	1	1

탈착식 커넥터

A850GL & A750GL

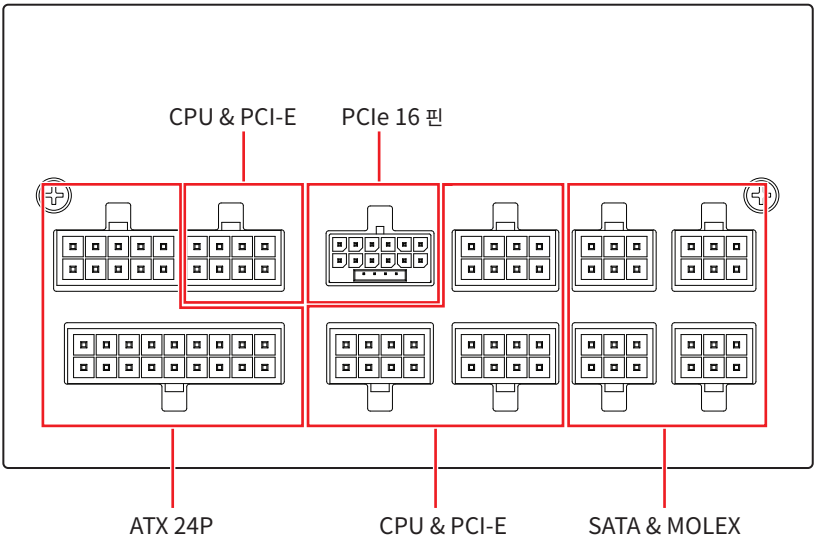

A650GL

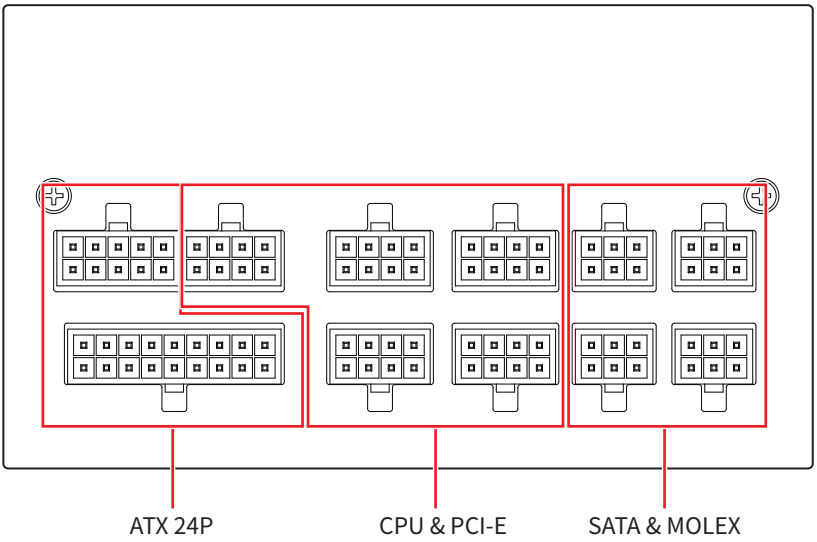

연결 및 케이블 길이

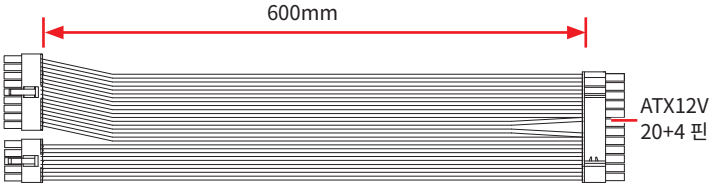

X 1

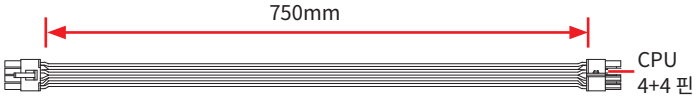

X 2

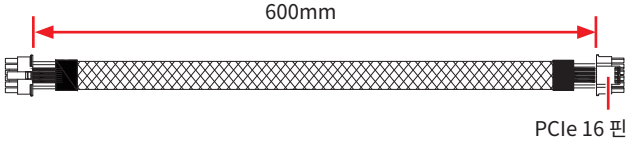

X 1

MAG A850GL PCIE5

MAG A850GL PCIE5 WHITE

MAG A850GL PCIE5 II

MAG A850GL PCIE5 TOY STORY EDITION

MAG A750GL PCIE5

MAG A750GL PCIE5 II

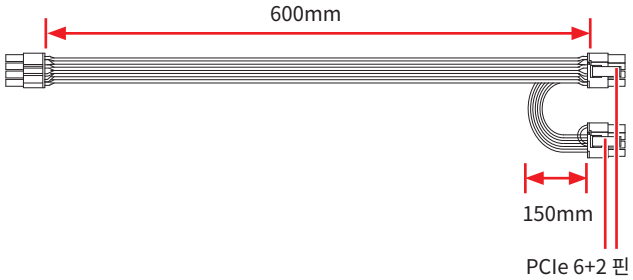

X 2

MAG A850GL PCIE5

MAG A850GL PCIE5 WHITE

MAG A850GL PCIE5 II

MAG A850GL PCIE5 TOY STORY EDITION

MAG A650GL

X 1

MAG A750GL PCIE5

MAG A750GL PCIE5 II

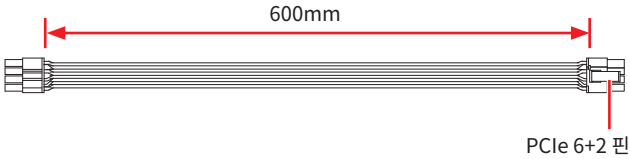

X 1

MAG A750GL PCIE5

MAG A750GL PCIE5 II

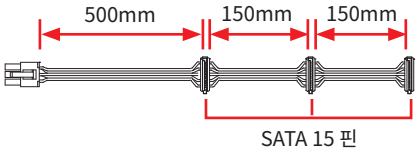

X 2

MAG A650GL

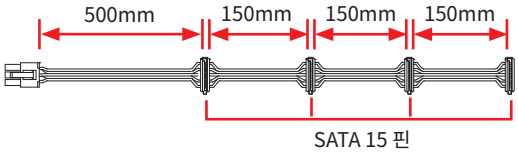

X 2

MAG A850GL PCIE5

MAG A850GL PCIE5 WHITE

MAG A850GL PCIE5 II

MAG A850GL PCIE5 TOY STORY EDITION

MAG A750GL PCIE5

MAG A750GL PCIE5 II

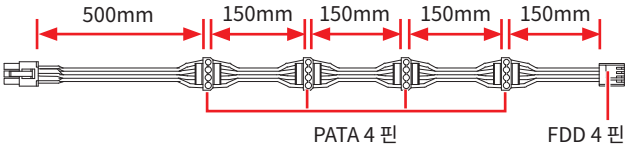

X 1

MAG A850GL PCIE5

MAG A850GL PCIE5 WHITE

MAG A850GL PCIE5 II

MAG A850GL PCIE5 TOY STORY EDITION

MAG A750GL PCIE5

MAG A750GL PCIE5 II

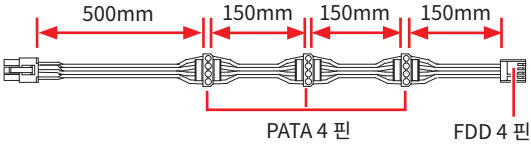

X 1

MAG A650GL

PCIe 16 핀케이블 설치

주의

사용하기 전에 케이블을 완전히 삽입하십시오.

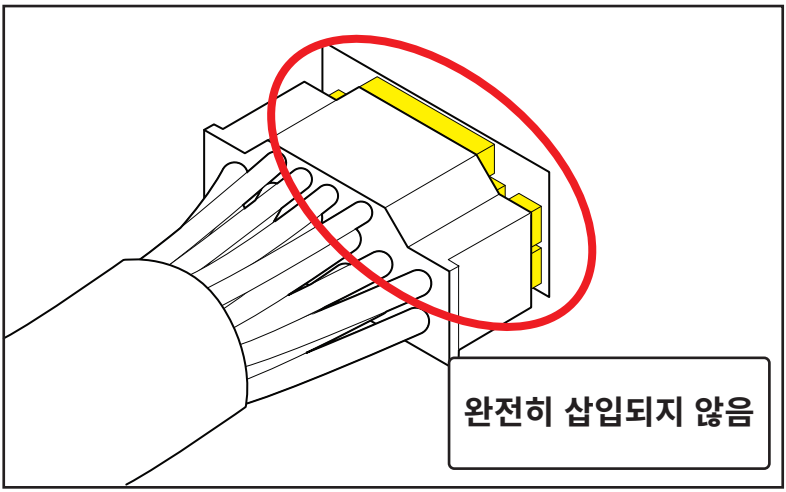

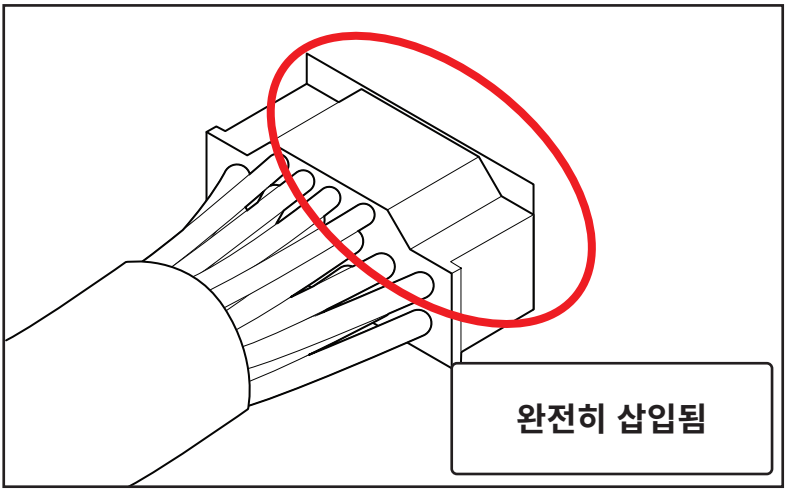

目錄

規格 2
尺寸 3
電源接頭數量 4
可拆卸接頭 5
連接頭和電纜長度 6
PCIe 16 針線材安裝 7

規格

850W					
電壓	+5V	+3.3V	+12V	-12V	+5Vsb
最大負載	20.0A	20.0A	70.5A	0.3A	2.5A
結合功率	110W		846W	3.6W	12.5W
總功率	850W				
調節	±3%	±3%	±3%	±10%	±3%
紋波雜訊	40mVp-p	40mVp-p	60mVp-p	80mVp-p	40mVp-p

750W					
電壓	+5V	+3.3V	+12V	-12V	+5Vsb
最大負載	20.0A	20.0A	62.0A	0.3A	2.5A
結合功率	110W		744W	3.6W	12.5W
總功率	750W				
調節	±3%	±3%	±3%	±10%	±3%
紋波雜訊	40mVp-p	40mVp-p	60mVp-p	80mVp-p	40mVp-p

650W					
電壓	+5V	+3.3V	+12V	-12V	+5Vsb
最大負載	20.0A	20.0A	54.0A	0.3A	2.5A
結合功率	100W		648W	3.6W	12.5W
總功率	650W				
調節	±3%	±3%	±3%	±10%	±3%
紋波雜訊	40mVp-p	40mVp-p	60mVp-p	80mVp-p	40mVp-p

尺寸

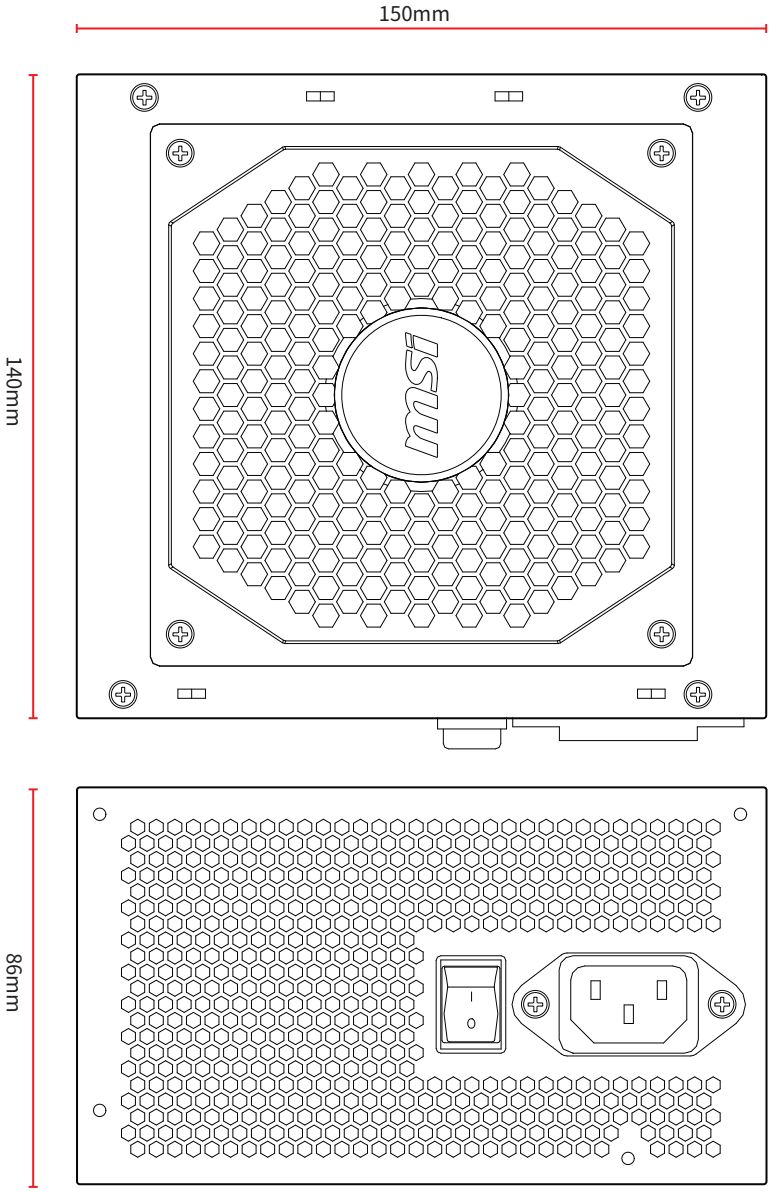

電源接頭數量

電源接頭	A850GL	A750GL	A650GL
ATX12V (主機板) 20+4 針	1	1	1
PCIe 16 針	1	1	0
EPS12V (CPU) 4+4 針	2	2	2
PCIe (VGA) 6+2 針	4	3	4
SATA 15 針	8	8	6
週邊設備 (PATA) 4 針	4	4	3
FDD 4 針	1	1	1

可拆卸接頭

A850GL & A750GL

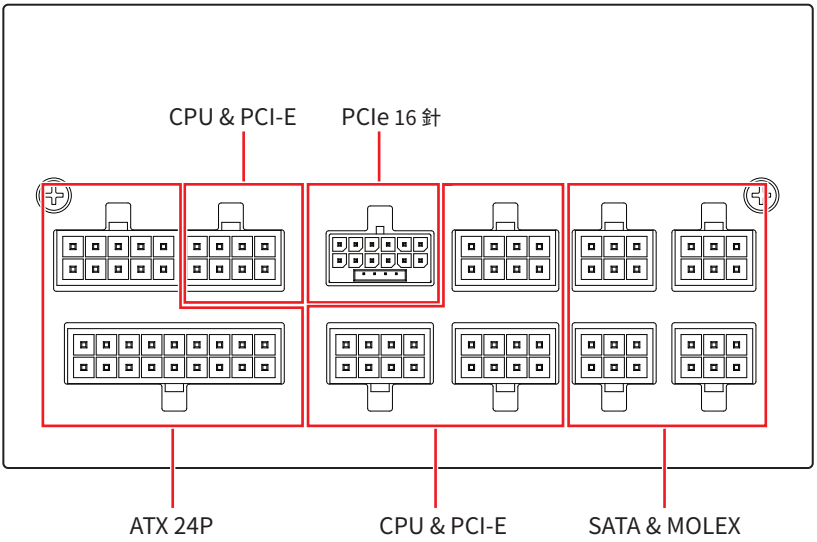

A650GL

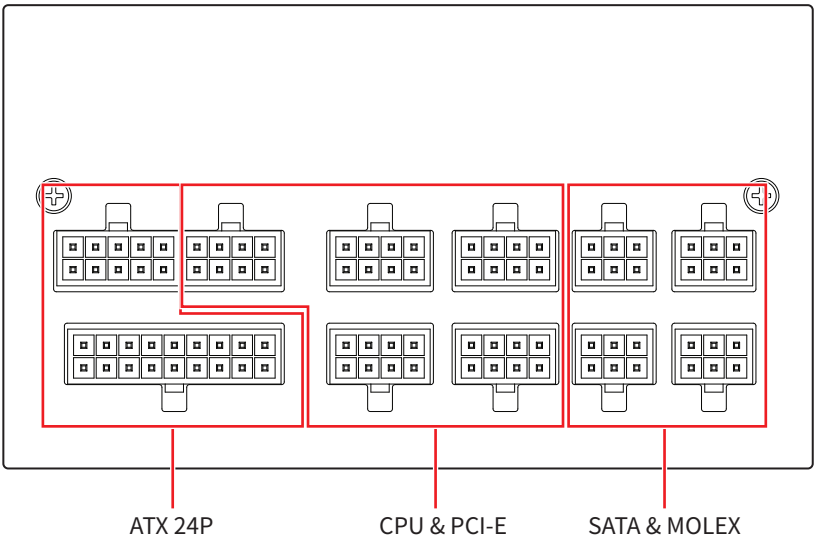

連接頭和電纜長度

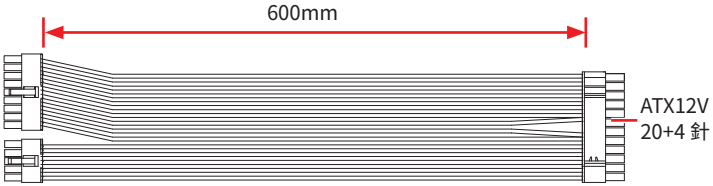

X 1

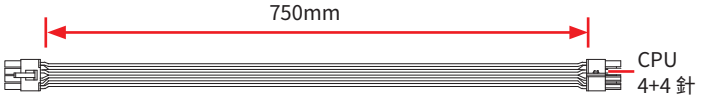

X 2

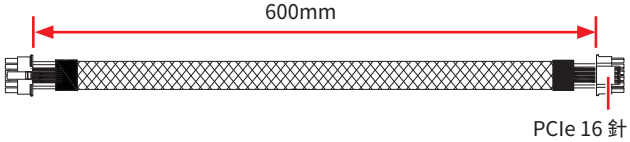

X 1

MAG A850GL PCIE5

MAG A850GL PCIE5 WHITE

MAG A850GL PCIE5 II

MAG A850GL PCIE5 TOY STORY EDITION

MAG A750GL PCIE5

MAG A750GL PCIE5 II

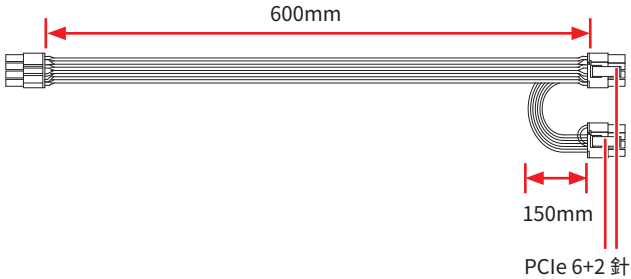

X 2

MAG A850GL PCIE5

MAG A850GL PCIE5 WHITE

MAG A850GL PCIE5 II

MAG A850GL PCIE5 TOY STORY EDITION

MAG A650GL

X 1

MAG A750GL PCIE5

MAG A750GL PCIE5 II

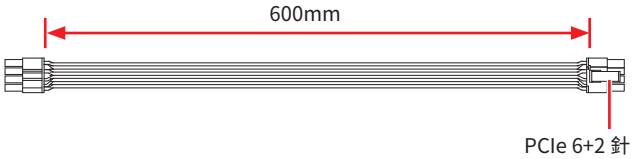

X 1

MAG A750GL PCIE5

MAG A750GL PCIE5 II

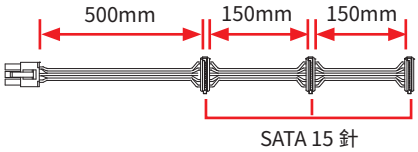

X 2

MAG A650GL

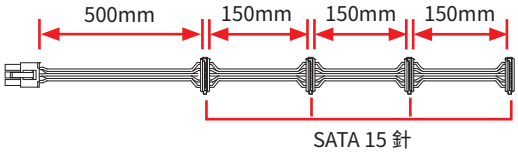

X 2

MAG A850GL PCIE5

MAG A850GL PCIE5 WHITE

MAG A850GL PCIE5 II

MAG A850GL PCIE5 TOY STORY EDITION

MAG A750GL PCIE5

MAG A750GL PCIE5 II

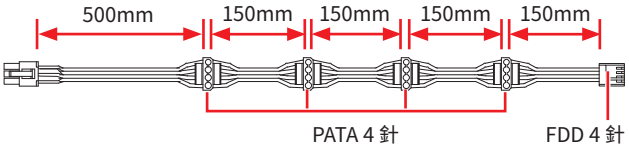

X 1

MAG A850GL PCIE5

MAG A850GL PCIE5 WHITE

MAG A850GL PCIE5 II

MAG A850GL PCIE5 TOY STORY EDITION

MAG A750GL PCIE5

MAG A750GL PCIE5 II

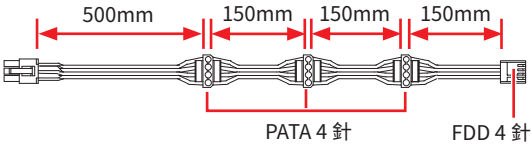

X 1

MAG A650GL

PCIe 16 針線材安裝

注意

使用前請確實插好插頭。

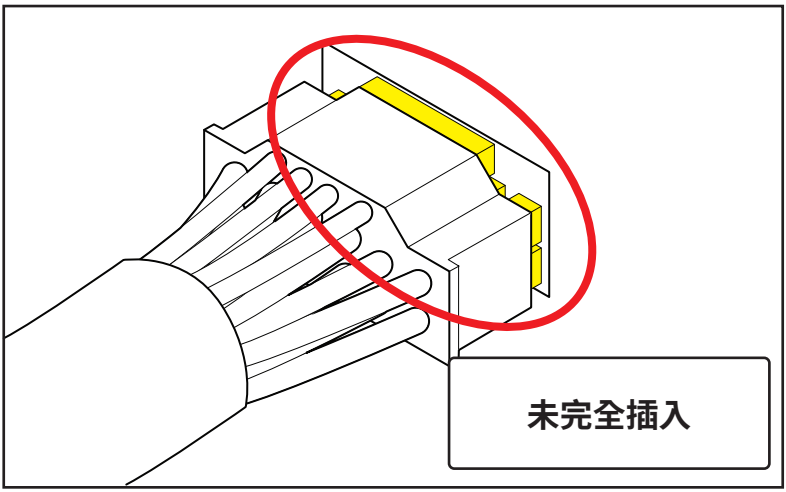

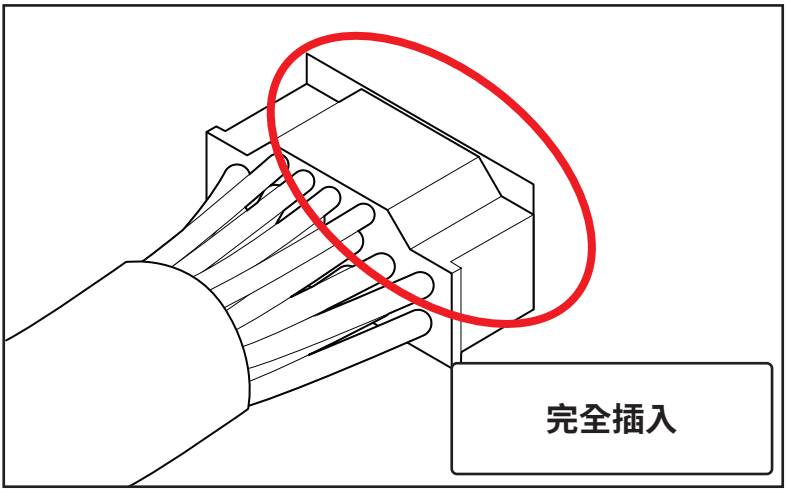

目录

产品规格 2
尺寸 3
电源接口数量 4
可拆卸接口 5
连接口和电缆的长度 6
PCIe 16 针电缆安装 8

产品规格

850W					
电压	+5V	+3.3V	+12V	-12V	+5Vsb
最大负载	20.0A	20.0A	70.5A	0.3A	2.5A
组合功率	110W		846W	3.6W	12.5W
总功率	850W				
调节	±3%	±3%	±3%	±10%	±3%
波纹噪声	40mVp-p	40mVp-p	60mVp-p	80mVp-p	40mVp-p

750W					
电压	+5V	+3.3V	+12V	-12V	+5Vsb
最大负载	20.0A	20.0A	62.0A	0.3A	2.5A
组合功率	110W		744W	3.6W	12.5W
总功率	750W				
调节	±3%	±3%	±3%	±10%	±3%
波纹噪声	40mVp-p	40mVp-p	60mVp-p	80mVp-p	40mVp-p

650W					
电压	+5V	+3.3V	+12V	-12V	+5Vsb
最大负载	20.0A	20.0A	54.0A	0.3A	2.5A
组合功率	100W		648W	3.6W	12.5W
总功率	650W				
调节	±3%	±3%	±3%	±10%	±3%
波纹噪声	40mVp-p	40mVp-p	60mVp-p	80mVp-p	40mVp-p

尺寸

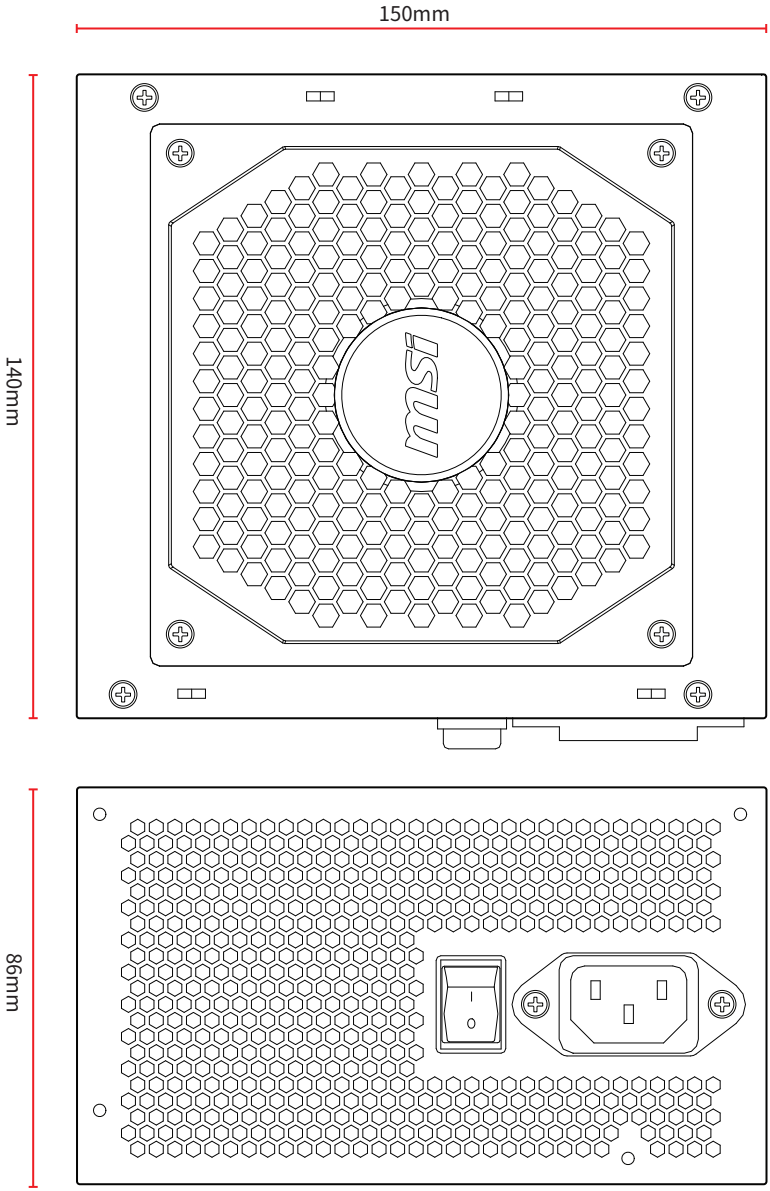

电源接口数量

电源接口	A850GL	A750GL	A650GL
ATX12V (主板) 20+4 针	1	1	1
PCIe 16 针	1	1	0
EPS12V (CPU) 4+4 针	2	2	2
PCIe (VGA) 6+2 针	4	3	4
SATA 15 针	8	8	6
外围设备 (PATA) 4 针	4	4	3
FDD 4 针	1	1	1

可拆卸接口

A850GL & A750GL

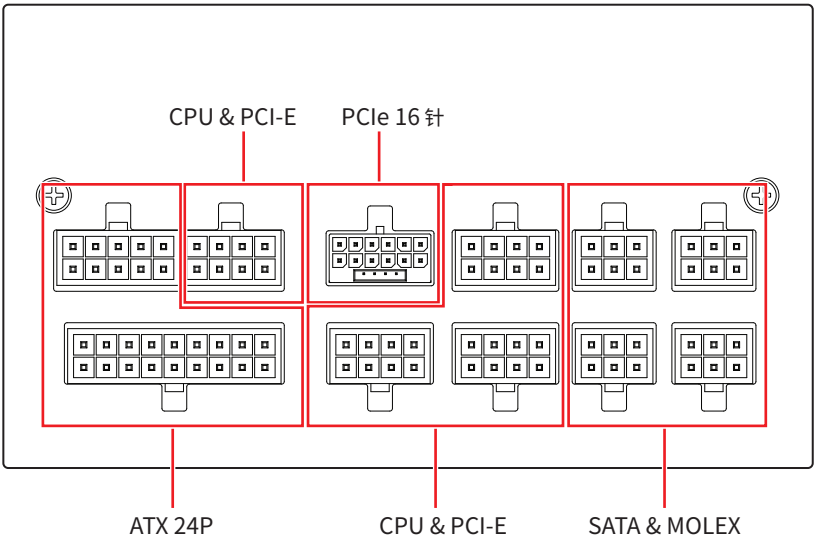

A650GL

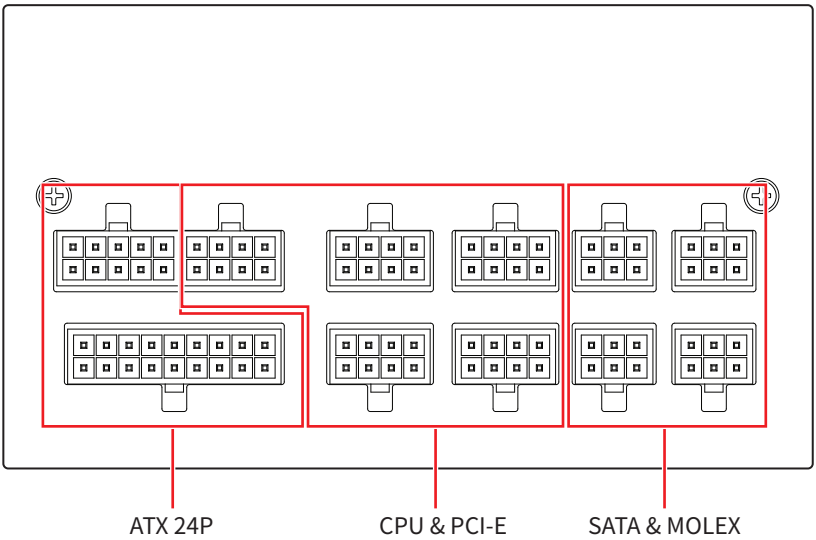

连接口和电缆的长度

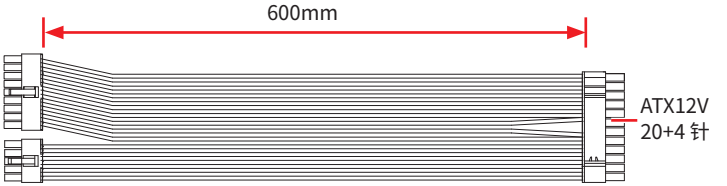

X 1

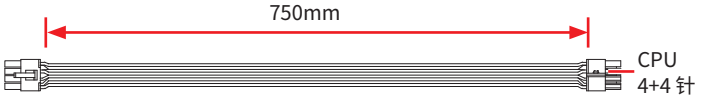

X 2

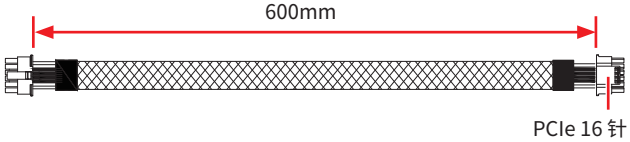

X 1

MAG A850GL PCIE5

MAG A850GL PCIE5 WHITE

MAG A850GL PCIE5 II

MAG A850GL PCIE5 TOY STORY EDITION

MAG A750GL PCIE5

MAG A750GL PCIE5 II

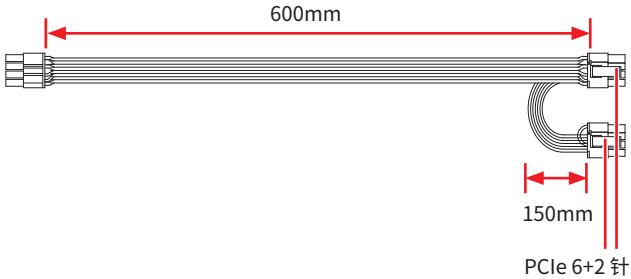

X 2

MAG A850GL PCIE5

MAG A850GL PCIE5 WHITE

MAG A850GL PCIE5 II

MAG A850GL PCIE5 TOY STORY EDITION

MAG A650GL

X 1

MAG A750GL PCIE5

MAG A750GL PCIE5 II

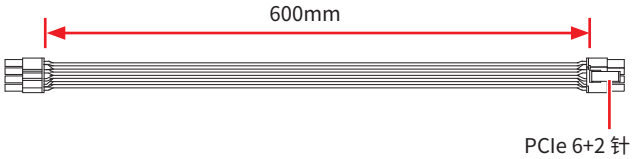

X 1

MAG A750GL PCIE5

MAG A750GL PCIE5 II

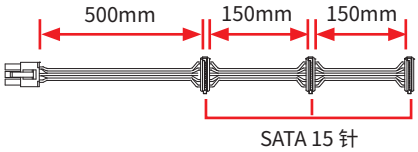

X 2

MAG A650GL

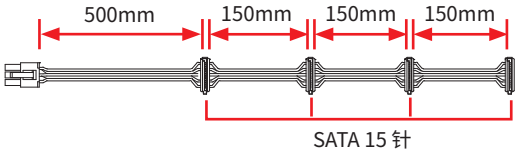

X 2

MAG A850GL PCIE5

MAG A850GL PCIE5 WHITE

MAG A850GL PCIE5 II

MAG A850GL PCIE5 TOY STORY EDITION

MAG A750GL PCIE5

MAG A750GL PCIE5 II

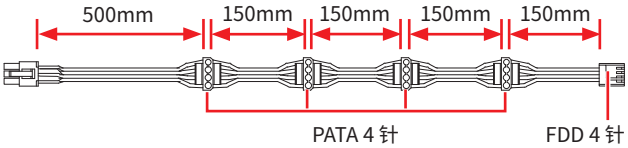

X 1

MAG A850GL PCIE5

MAG A850GL PCIE5 WHITE

MAG A850GL PCIE5 II

MAG A850GL PCIE5 TOY STORY EDITION

MAG A750GL PCIE5

MAG A750GL PCIE5 II

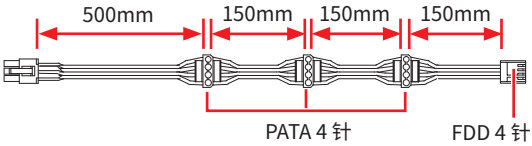

X 1

MAG A650GL

PCIe 16 针电缆安装

警告

使用前请确认将电缆完全插入。

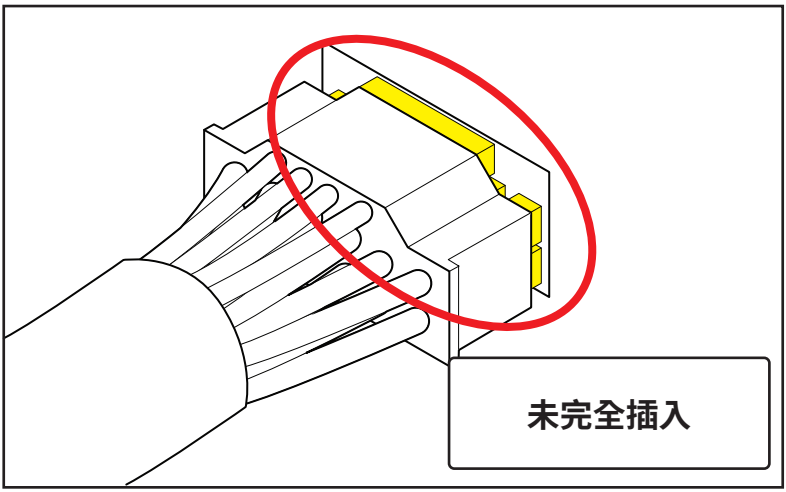

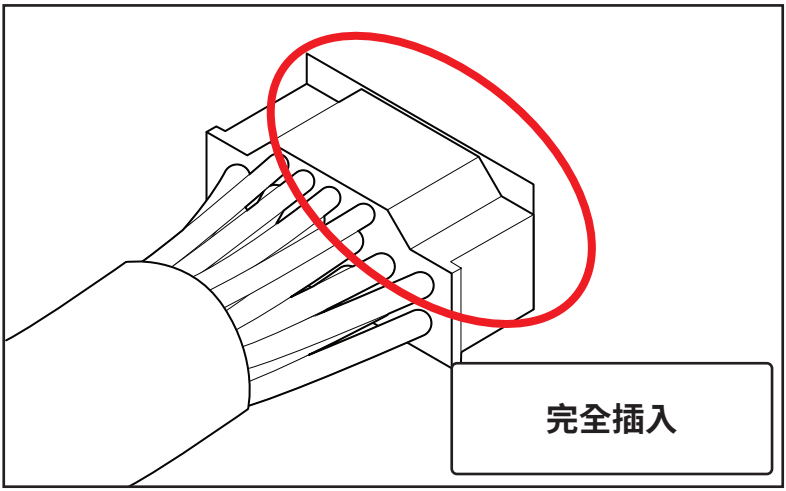

Contenuti

Specifiche 2

Dimensioni 3

Numero di connettori di alimentazione 4

Connettori rimovibili 5

Connettività e lunghezza dei cavi 6

Installazione del cavo PCIe a 16 pin 8

Specifiche

850 W					
Tensione	+5 V	+3,3 V	+12 V	-12 V	+5 Vsb
Carico max.	20,0 A	20,0 A	70,5 A	0,3 A	2,5 A
Potenza combinata	110 W		846 W	3,6 W	12,5 W
Potenza totale	850 W				
Regolazione	±3%	±3%	±3%	±10%	±3%
Ondulazione e rumore	40□Vp-p	40□Vp-p	60□Vp-p	80□Vp-p	40□Vp-p

750 W					
Tensione	+5 V	+3,3 V	+12 V	-12 V	+5 Vsb
Carico max.	20,0 A	20,0 A	62,0 A	0,3 A	2,5 A
Potenza combinata	110 W		744 W	3,6 W	12,5 W
Potenza totale	750 W				
Regolazione	±3%	±3%	±3%	±10%	±3%
Ondulazione e rumore	40□Vp-p	40□Vp-p	60□Vp-p	80□Vp-p	40□Vp-p

650 W					
Tensione	+5 V	+3,3 V	+12 V	-12 V	+5 Vsb
Carico max.	20,0 A	20,0 A	54,0 A	0,3 A	2,5 A
Potenza combinata	100 W		648 W	3,6 W	12,5 W
Potenza totale	650 W				
Regolazione	±3%	±3%	±3%	±10%	±3%
Ondulazione e rumore	40□Vp-p	40□Vp-p	60□Vp-p	80□Vp-p	40□Vp-p

Dimensioni

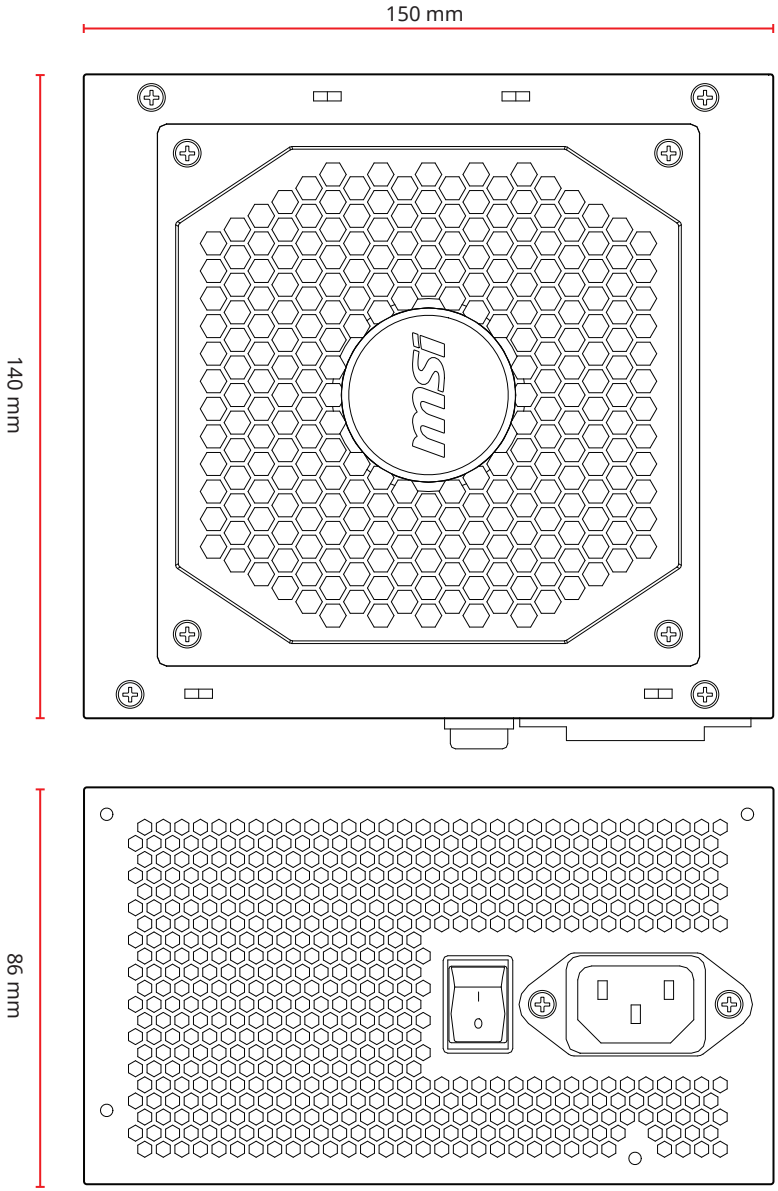

Numero di connettori di alimentazione

Connettori di alimentazione	A850GL	A750GL	A650GL
ATX12V (scheda madre) 20+4 pin	1	1	1
PCIe 16 pin	1	1	0
EPS12V (CPU) 4+4 pin	2	2	2
PCIe (VGA) 6+2 pin	4	3	4
SATA 15 pin	8	8	6
Periferica (PATA) 4 pin	4	4	3
FDD 4 pin	1	1	1

Connettori rimovibili

A850GL & A750GL

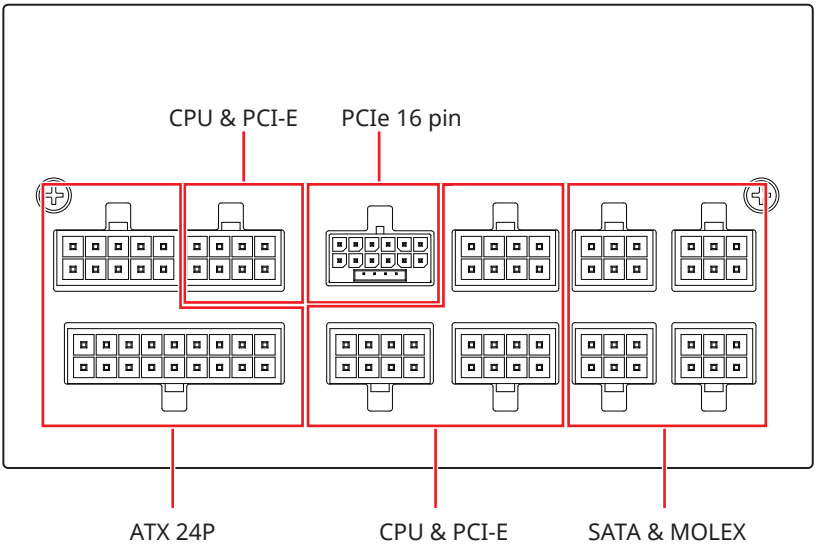

A650GL

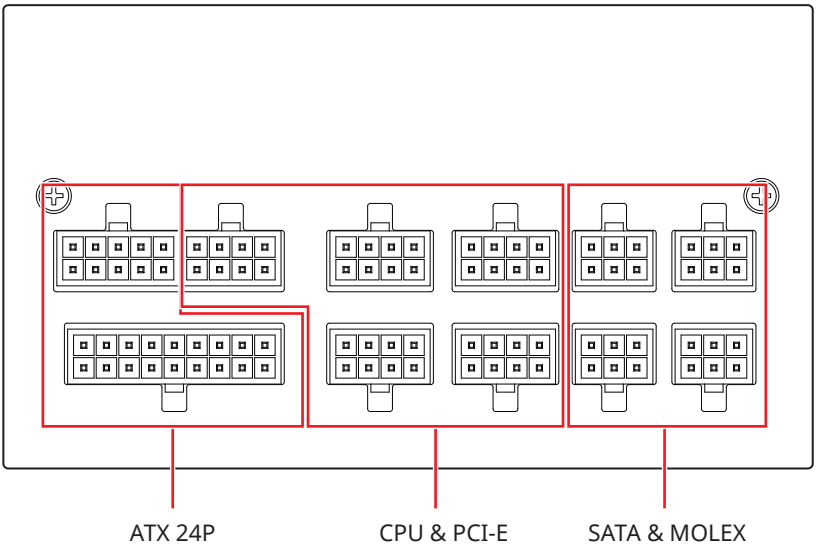

Connettività e lunghezza dei cavi

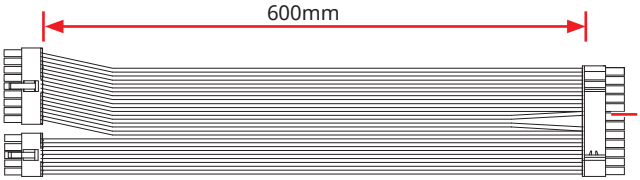

X 1

X 2

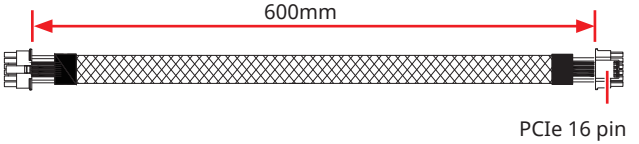

X 1

MAG A850GL PCIE5

MAG A850GL PCIE5 WHITE

MAG A850GL PCIE5 II

MAG A850GL PCIE5 TOY STORY EDITION

MAG A750GL PCIE5

MAG A750GL PCIE5 II

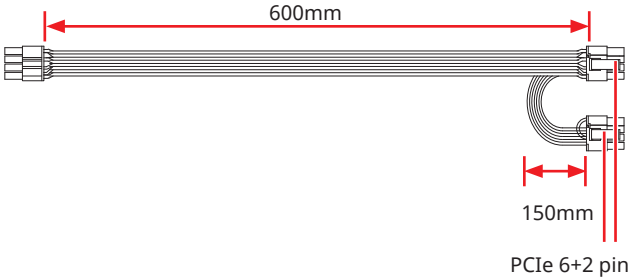

X 2

MAG A850GL PCIE5

MAG A850GL PCIE5 WHITE

MAG A850GL PCIE5 II

MAG A850GL PCIE5 TOY STORY EDITION

MAG A650GL

X 1

MAG A750GL PCIE5

MAG A750GL PCIE5 II

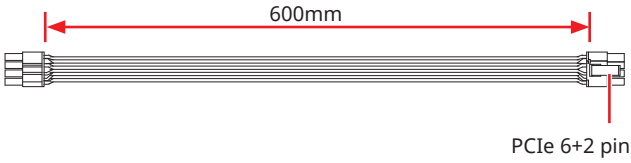

X 1

MAG A750GL PCIE5

MAG A750GL PCIE5 II

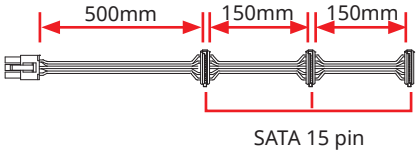

X 2

MAG A650GL

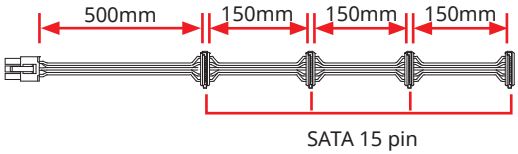

X 2

MAG A850GL PCIE5

MAG A850GL PCIE5 WHITE

MAG A850GL PCIE5 II

MAG A850GL PCIE5 TOY STORY EDITION

MAG A750GL PCIE5

MAG A750GL PCIE5 II

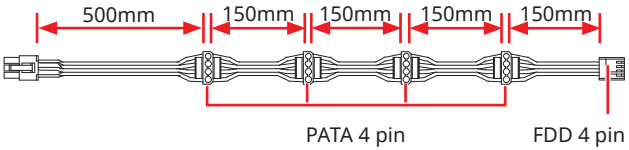

X 1

MAG A850GL PCIE5

MAG A850GL PCIE5 WHITE

MAG A850GL PCIE5 II

MAG A850GL PCIE5 TOY STORY EDITION

MAG A750GL PCIE5

MAG A750GL PCIE5 II

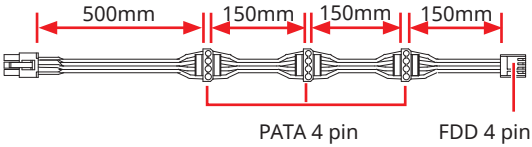

X 1

MAG A650GL

Installazione del cavo PCIe a 16 pin

ATTENZIONE

Inserire completamente il cavo prima dell'uso.

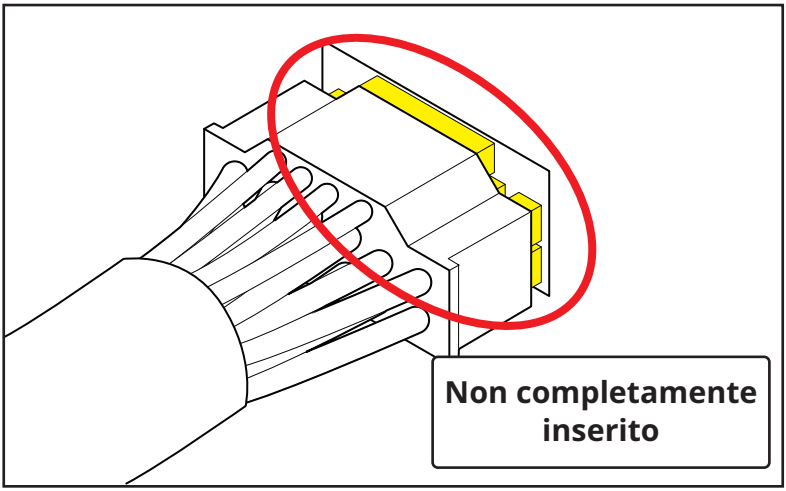

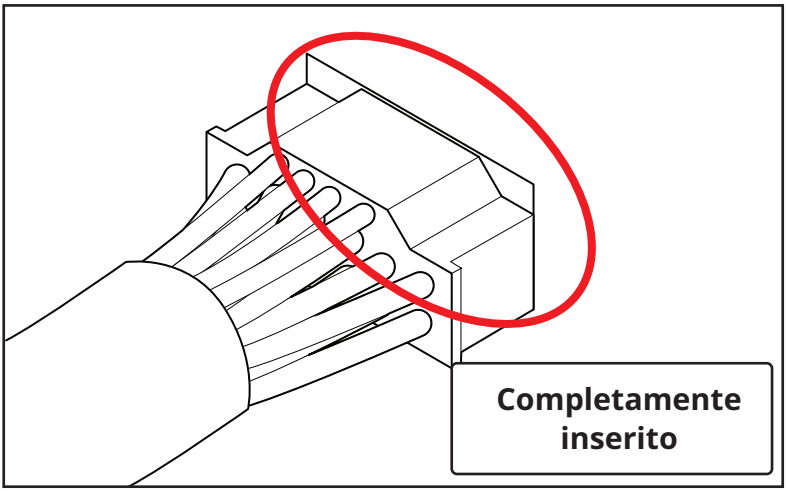

Spis treści

Dane techniczne 2

Wymiary 3

Liczba złączy zasilania 4

Odłączane złącza 5

Połączenia i długość kabli 6

Podłączanie 16-pinowego kabla PCIe 8

Dane techniczne

850 W					
Napięcie	+5 V	+3,3 V	+12 V	-12 V	+5 Vsb
Maks. obciążenie	20,0 A	20,0 A	70,5 A	0,3 A	2,5 A
Łączna moc	110 W		846 W	3,6 W	12,5 W
Całkowita moc	850 W				
Regulacja	±3%	±3%	±3%	±10%	±3%
Tętnienia i szumy	40□Vp-p	40□Vp-p	60□Vp-p	80□Vp-p	40□Vp-p

750 W					
Napięcie	+5 V	+3,3 V	+12 V	-12 V	+5 Vsb
Maks. obciążenie	20,0 A	20,0 A	62,0 A	0,3 A	2,5 A
Łączna moc	110 W		744 W	3,6 W	12,5 W
Całkowita moc	750 W				
Regulacja	±3%	±3%	±3%	±10%	±3%
Tętnienia i szumy	40□Vp-p	40□Vp-p	60□Vp-p	80□Vp-p	40□Vp-p

650 W					
Napięcie	+5 V	+3,3 V	+12 V	-12 V	+5 Vsb
Maks. obciążenie	20,0 A	20,0 A	54,0 A	0,3 A	2,5 A
Łączna moc	100 W		648 W	3,6 W	12,5 W
Całkowita moc	650 W				
Regulacja	±3%	±3%	±3%	±10%	±3%
Tętnienia i szumy	40□Vp-p	40□Vp-p	60□Vp-p	80□Vp-p	40□Vp-p

Wymiary

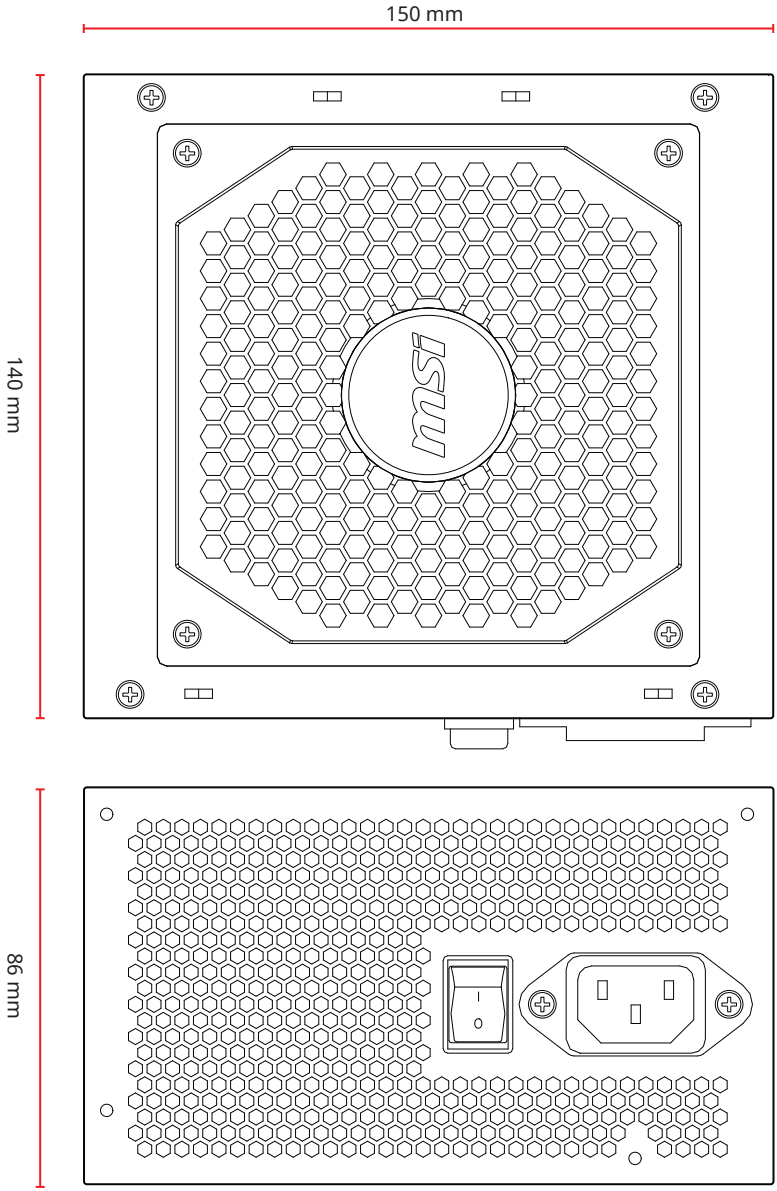

Liczba złączy zasilania

Złącza zasilania	A850GL	A750GL	A650GL
ATX12V (płyta główna) 20+4 piny	1	1	1
PCIe 16 pinyów	1	1	0
EPS12V (procesor) 4+4 piny	2	2	2
PCIe (VGA) 6+2 piny	4	3	4
SATA 15 pinyów	8	8	6
Peryferyjne (PATA) 4 piny	4	4	3
FDD 4 piny	1	1	1

Odłączane złącza

A850GL & A750GL

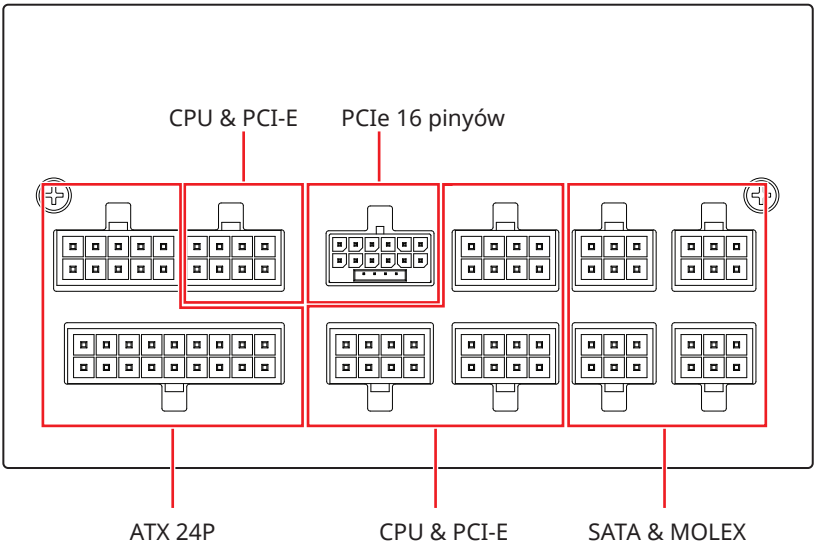

A650GL

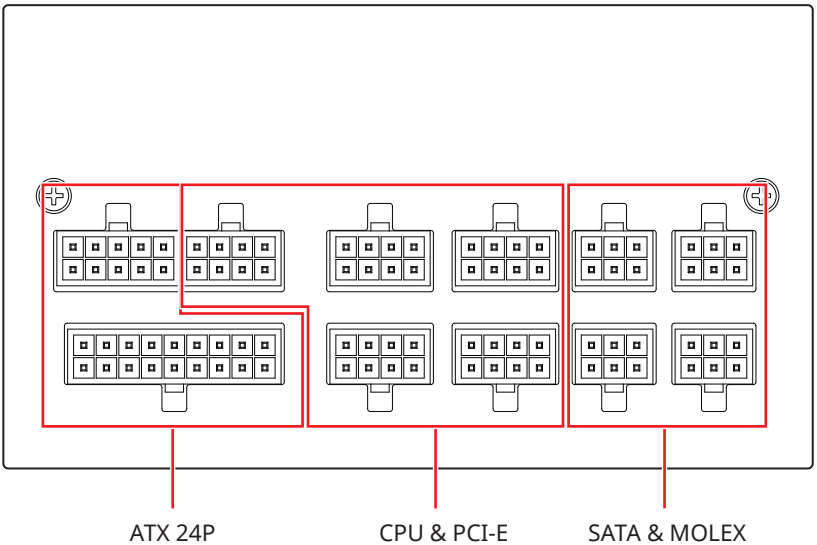

Połączenia i długość kabli

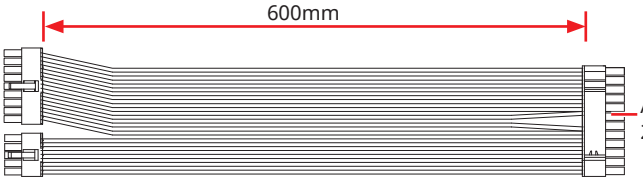

X 1

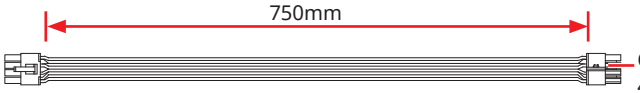

X 2

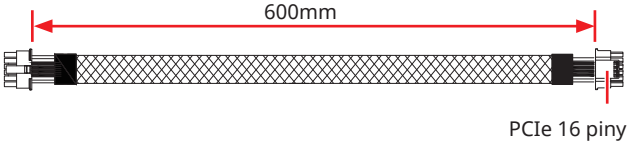

X 1

MAG A850GL PCIE5

MAG A850GL PCIE5 WHITE

MAG A850GL PCIE5 II

MAG A850GL PCIE5 TOY STORY EDITION

MAG A750GL PCIE5

MAG A750GL PCIE5 II

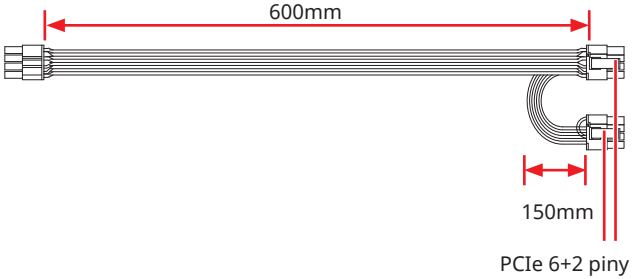

X 2

MAG A850GL PCIE5

MAG A850GL PCIE5 WHITE

MAG A850GL PCIE5 II

MAG A850GL PCIE5 TOY STORY EDITION

MAG A650GL

X 1

MAG A750GL PCIE5

MAG A750GL PCIE5 II

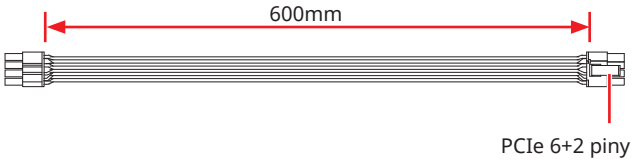

X 1

MAG A750GL PCIE5

MAG A750GL PCIE5 II

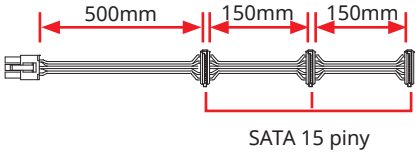

X 2

MAG A650GL

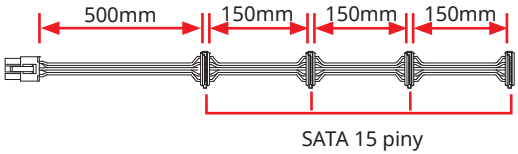

X 2

MAG A850GL PCIE5

MAG A850GL PCIE5 WHITE

MAG A850GL PCIE5 II

MAG A850GL PCIE5 TOY STORY EDITION

MAG A750GL PCIE5

MAG A750GL PCIE5 II

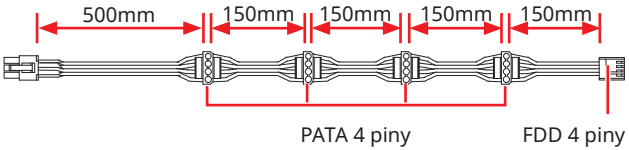

X 1

MAG A850GL PCIE5

MAG A850GL PCIE5 WHITE

MAG A850GL PCIE5 II

MAG A850GL PCIE5 TOY STORY EDITION

MAG A750GL PCIE5

MAG A750GL PCIE5 II

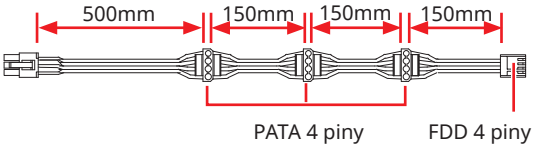

X 1

MAG A650GL

Podłączanie 16-pinowego kabla PCIe

PRZESTROGA

Kabel należy włożyć do końca gniazda.

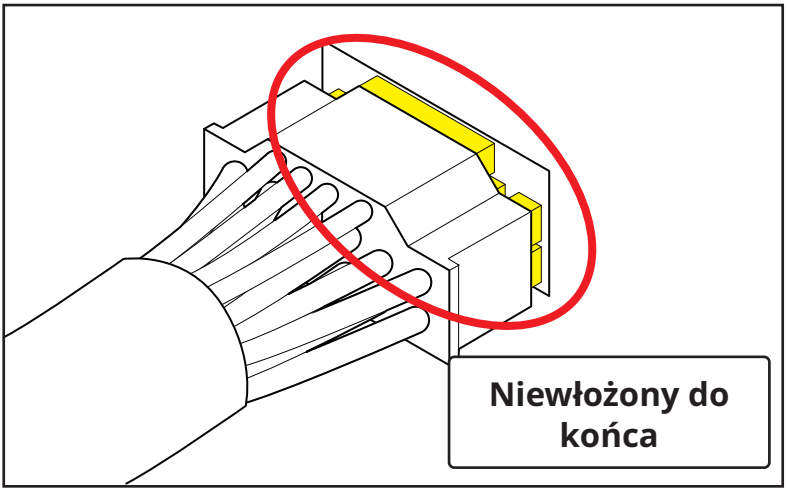

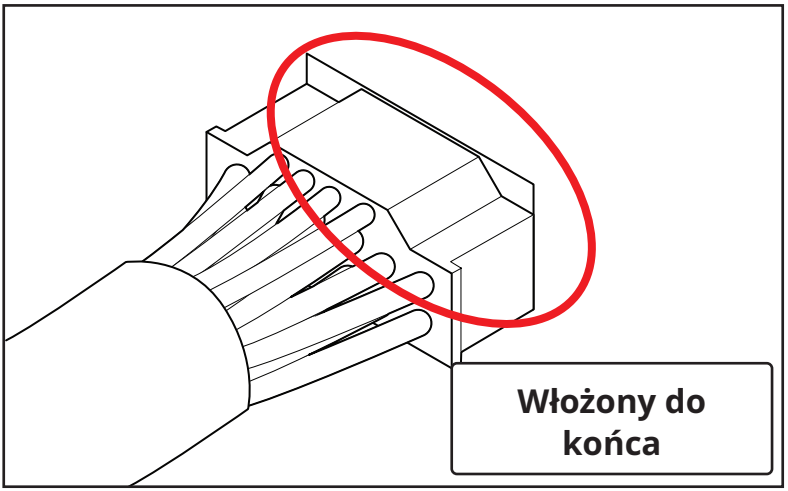

Índice

Especificações 2

Dimensões 3

Número de conectores de alimentação 4

Conectores amovíveis 5

Conectividade e comprimentos dos cabos 6

Instalação do cabo PCIe de 16 pinos 8

Especificações

850W					
Tensão	+5V	+3,3V	+12V	-12V	+5Vsb
Carga máx.	20,0A	20,0A	70,5A	0,3A	2,5A
Potência combinada	110W		846W	3,6W	12,5W
Potência total	850W				
Regulação	±3%	±3%	±3%	±10%	±3%
Ruído e ondulação	40□Vp-p	40□Vp-p	60□Vp-p	80□Vp-p	40□Vp-p

750W					
Tensão	+5V	+3,3V	+12V	-12V	+5Vsb
Carga máx.	20,0A	20,0A	62,0A	0,3A	2,5A
Potência combinada	110W		744W	3,6W	12,5W
Potência total	750W				
Regulação	±3%	±3%	±3%	±10%	±3%
Ruído e ondulação	40□Vp-p	40□Vp-p	60□Vp-p	80□Vp-p	40□Vp-p

650W					
Tensão	+5V	+3,3V	+12V	-12V	+5Vsb
Carga máx.	20,0A	20,0A	54,0A	0,3A	2,5A
Potência combinada	100W		648W	3,6W	12,5W
Potência total	650W				
Regulação	±3%	±3%	±3%	±10%	±3%
Ruído e ondulação	40□Vp-p	40□Vp-p	60□Vp-p	80□Vp-p	40□Vp-p

Dimensões

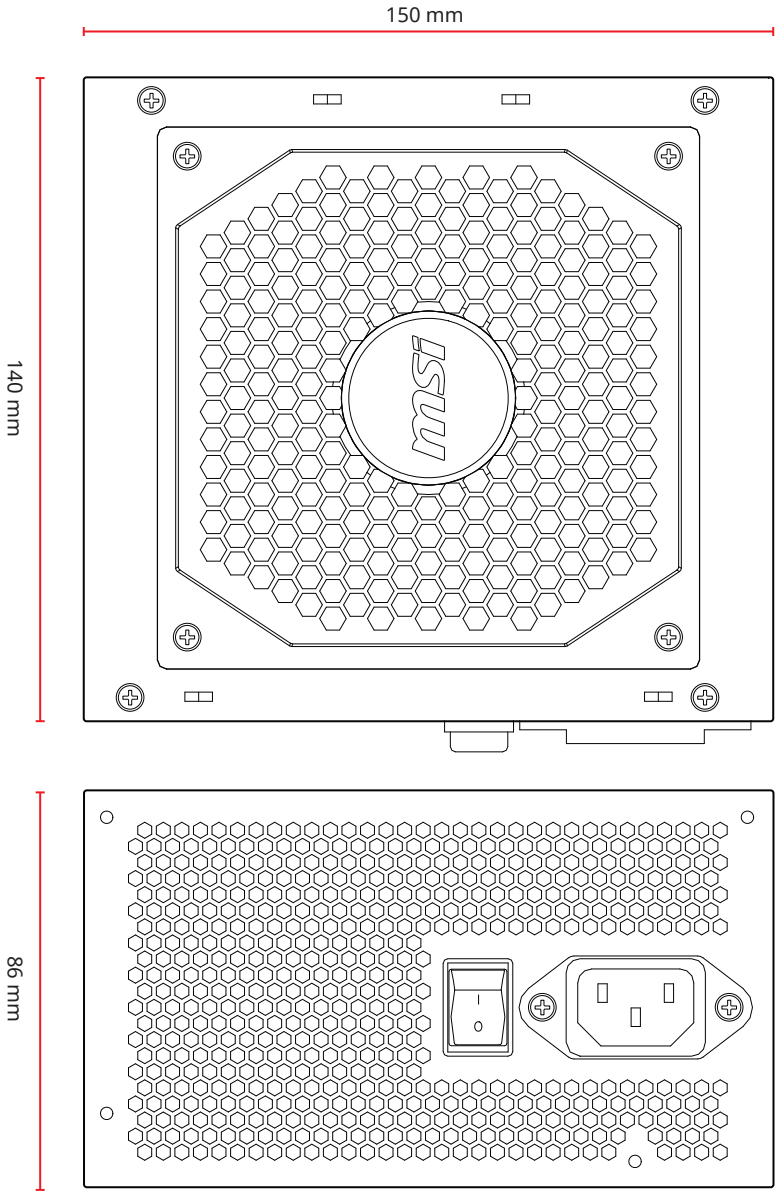

Número de conectores de alimentação

Conectores de alimentação	A850GL	A750GL	A650GL
ATX12V (placa principal) 20+4 pinos	1	1	1
PCIe 16 pinos	1	1	0
EPS12V (CPU) 4+4 pinos	2	2	2
PCIe (VGA) 6+2 pinos	4	3	4
SATA 15 pinos	8	8	6
Periférico (PATA) 4 pinos	4	4	3
FDD 4 pinos	1	1	1

Conectores amovíveis

A850GL & A750GL

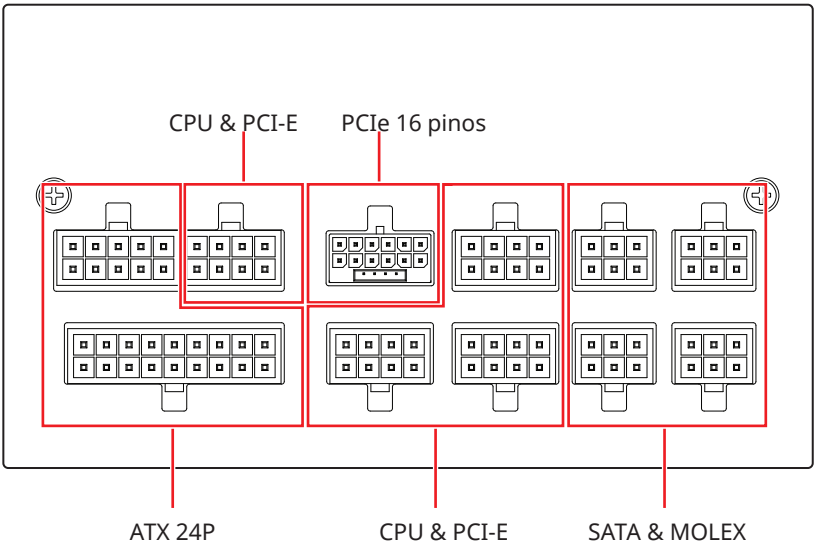

A650GL

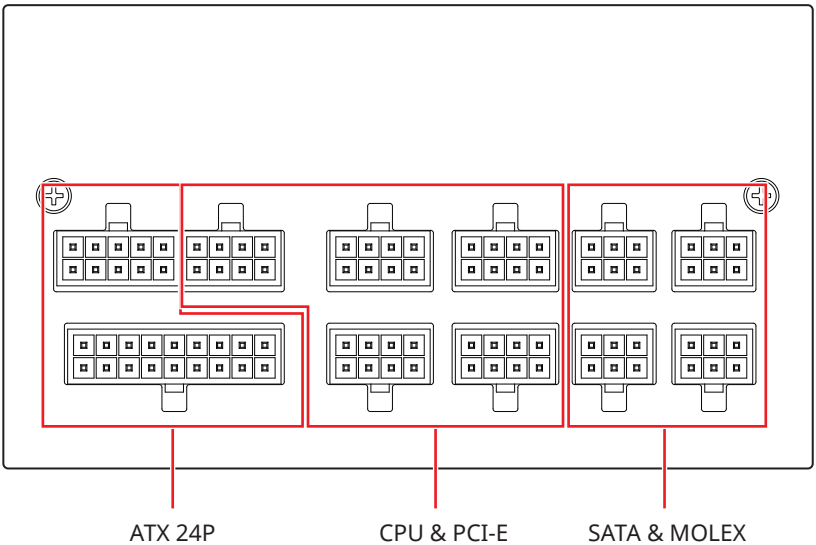

Conectividade e comprimentos dos cabos

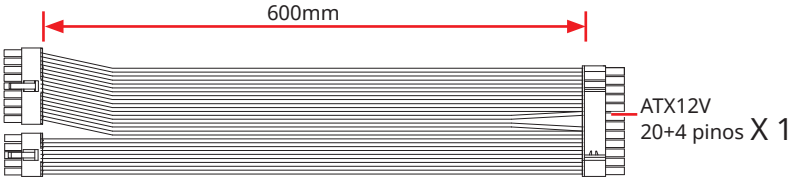

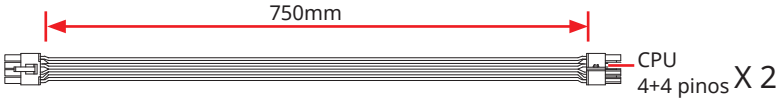

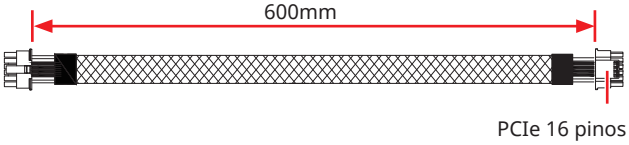

X 1

MAG A850GL PCIE5

MAG A850GL PCIE5 WHITE

MAG A850GL PCIE5 II

MAG A850GL PCIE5 TOY STORY EDITION

MAG A750GL PCIE5

MAG A750GL PCIE5 II

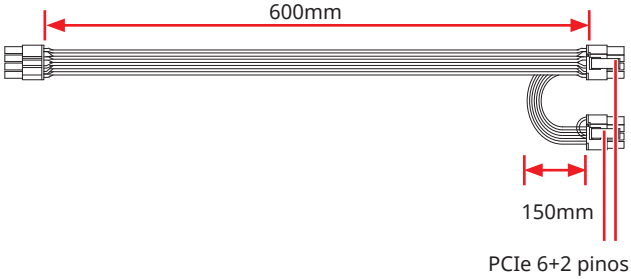

X 2

MAG A850GL PCIE5

MAG A850GL PCIE5 WHITE

MAG A850GL PCIE5 II

MAG A850GL PCIE5 TOY STORY EDITION

MAG A650GL

X 1

MAG A750GL PCIE5

MAG A750GL PCIE5 II

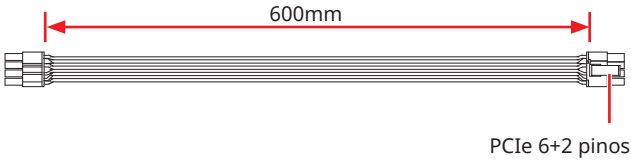

X 1

MAG A750GL PCIE5

MAG A750GL PCIE5 II

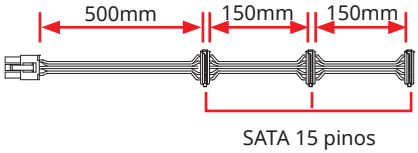

X 2

MAG A650GL

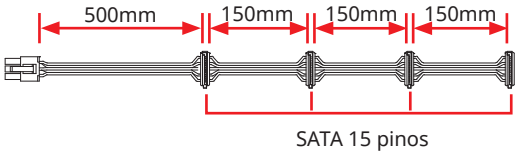

X 2

MAG A850GL PCIE5

MAG A850GL PCIE5 WHITE

MAG A850GL PCIE5 II

MAG A850GL PCIE5 TOY STORY EDITION

MAG A750GL PCIE5

MAG A750GL PCIE5 II

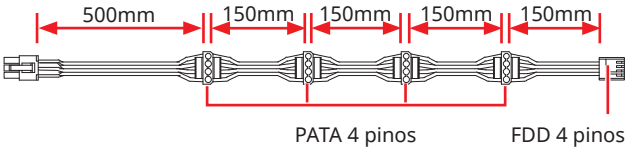

X 1

MAG A850GL PCIE5

MAG A850GL PCIE5 WHITE

MAG A850GL PCIE5 II

MAG A850GL PCIE5 TOY STORY EDITION

MAG A750GL PCIE5

MAG A750GL PCIE5 II

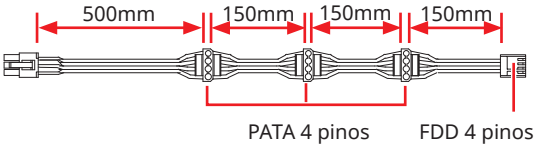

X 1

MAG A650GL

Instalação do cabo PCIe de 16 pinos

ATENÇÃO

Introduza o cabo totalmente antes de utilizar.

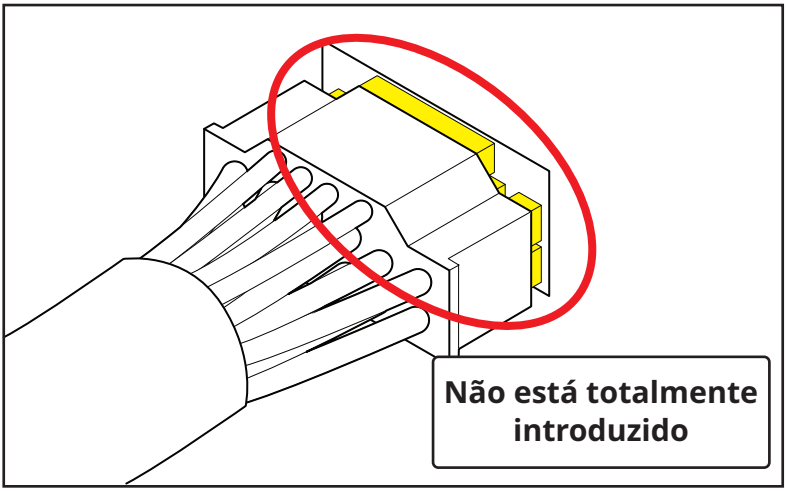

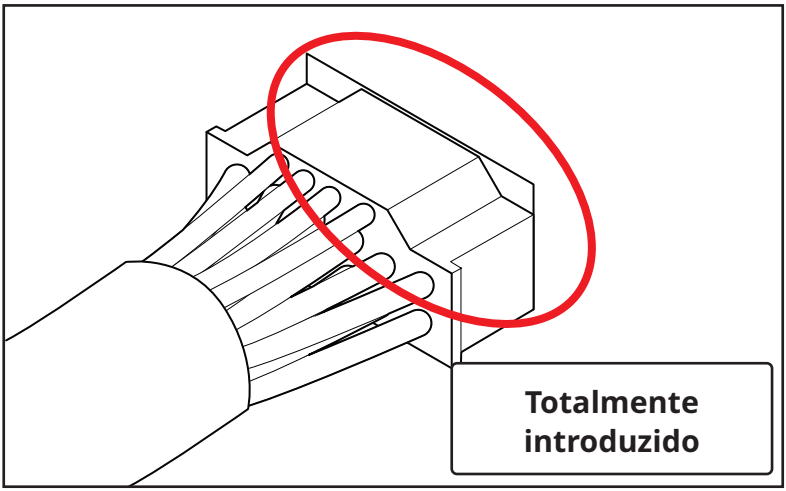

Contenido

Especificaciones 2
Dimensiones 3
Número de conectores de alimentación 4
Conectores desmontables 5
Conectividad y longitud de los cables 6
Instalación del cable PCIe de 16 contactos 8

Especificaciones

850 W					
Tensión	+5 V	+3,3 V	+12 V	-12 V	+5 Vsb
Carga máxima	20,0 A	20,0 A	70,5 A	0,3 A	2,5 A
Potencia combinada	110 W		846 W	3,6 W	12,5 W
Potencia total	850 W				
Regulación	±3%	±3%	±3%	±10%	±3%
Pulso y ruido	40 mVp-p	40 mVp-p	60 mVp-p	80 mVp-p	40 mVp-p

750 W					
Tensión	+5 V	+3,3 V	+12 V	-12 V	+5 Vsb
Carga máxima	20,0 A	20,0 A	62,0 A	0,3 A	2,5 A
Potencia combinada	110 W		744 W	3,6 W	12,5 W
Potencia total	750 W				
Regulación	±3%	±3%	±3%	±10%	±3%
Pulso y ruido	40 mVp-p	40 mVp-p	60 mVp-p	80 mVp-p	40 mVp-p

650 W					
Tensión	+5 V	+3,3 V	+12 V	-12 V	+5 Vsb
Carga máxima	20,0 A	20,0 A	54,0 A	0,3 A	2,5 A
Potencia combinada	100 W		648 W	3,6 W	12,5 W
Potencia total	650 W				
Regulación	±3%	±3%	±3%	±10%	±3%
Pulso y ruido	40 mVp-p	40 mVp-p	60 mVp-p	80 mVp-p	40 mVp-p

Dimensiones

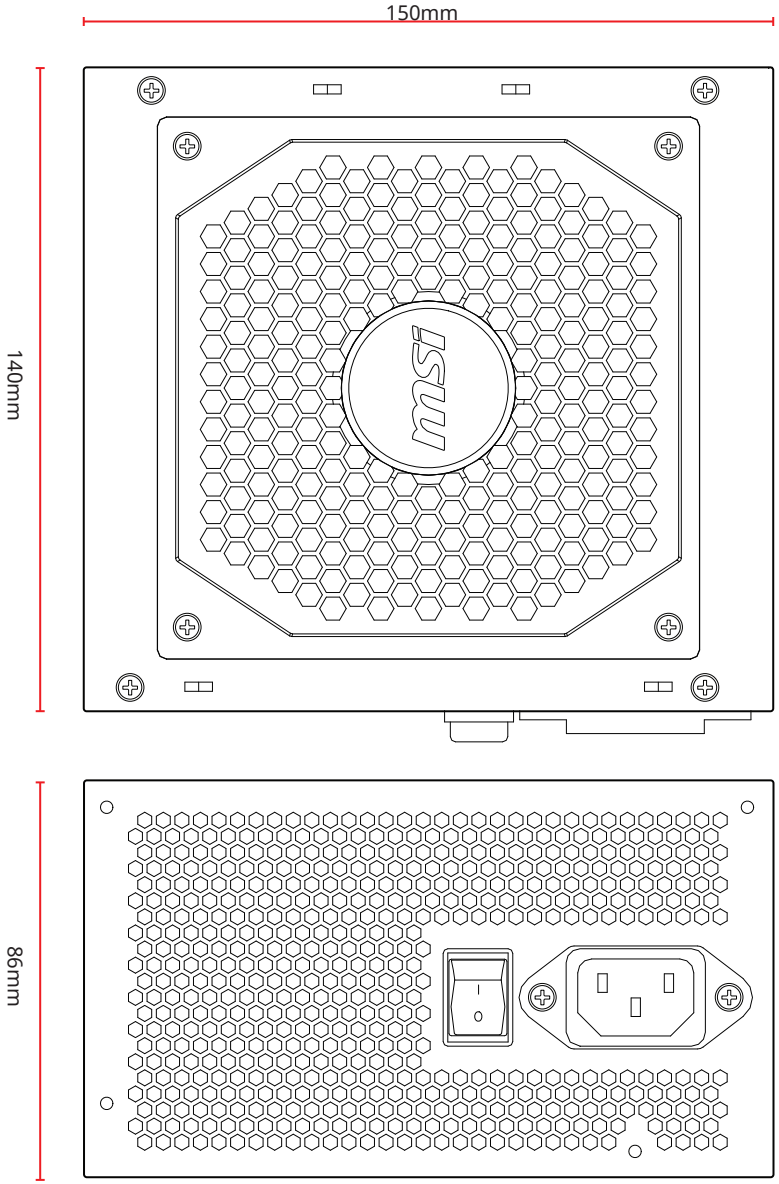

Número de conectores de alimentación

Conectores de alimentación	A850GL	A750GL	A650GL
ATX12V (placa base) de 20+4 contactos	1	1	1
PCIe de 16 contactos	1	1	0
EPS12V (CPU) de 4+4 contactos	2	2	2
PCIe (VGA) de 6+2 contactos	4	3	4
SATA de 15 contactos	8	8	6
Periférico (PATA) de 4 contactos	4	4	3
FDD de 4 contactos	1	1	1

Conectores desmontables

A850GL y A750GL

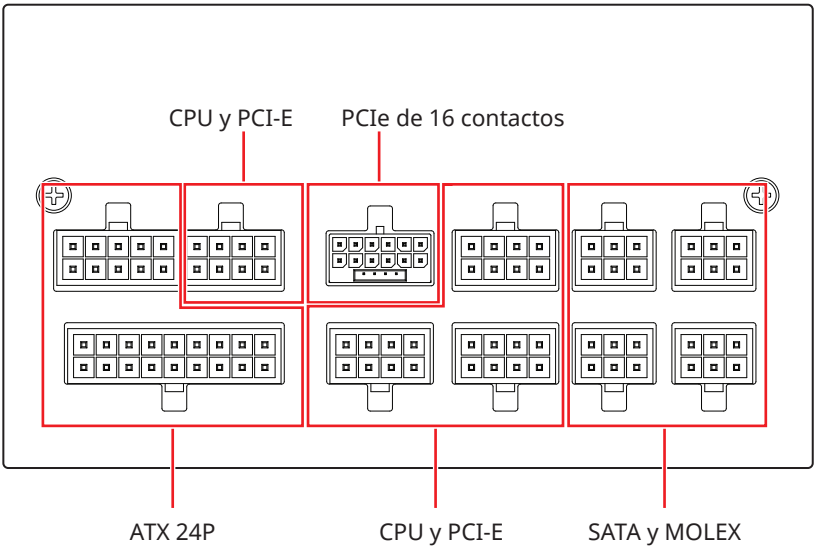

A650GL

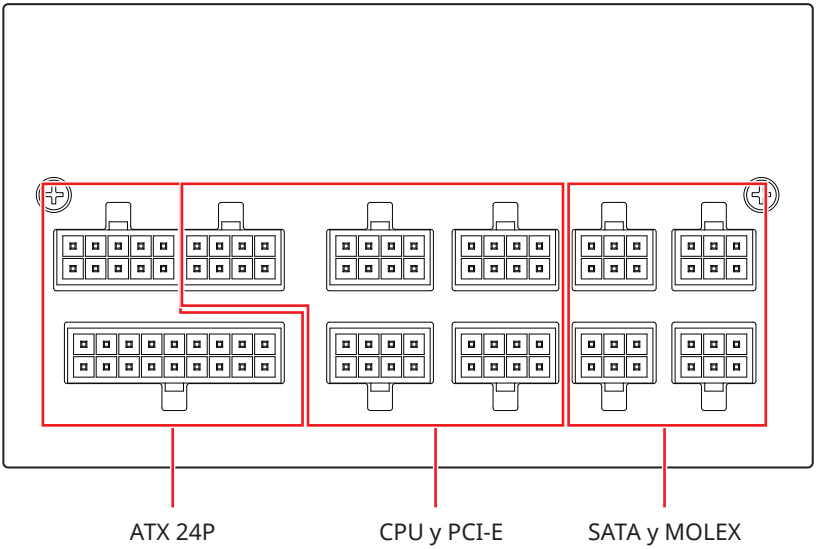

Conectividad y longitud de los cables

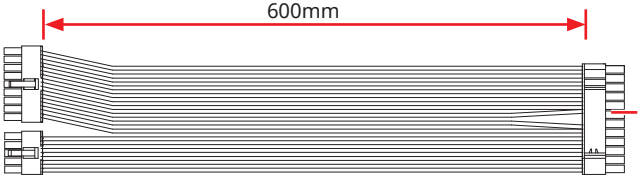

ATX12V
20+4
contactos

X 1

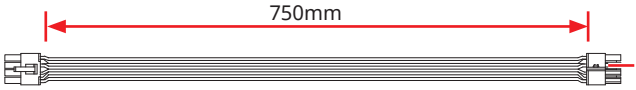

CPU
4+4
contactos

X 2

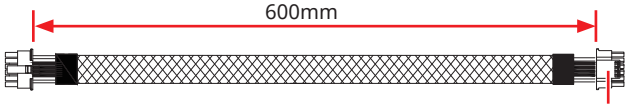

PCIe 16 contactos

X 1

MAG A850GL PCIE5

MAG A850GL PCIE5 WHITE

MAG A850GL PCIE5 II

MAG A850GL PCIE5 TOY STORY EDITION

MAG A750GL PCIE5

MAG A750GL PCIE5 II

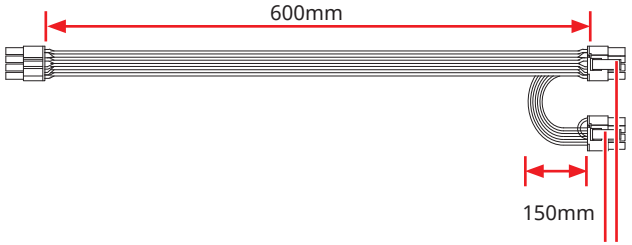

PCIe 6+2 contactos

X 2

MAG A850GL PCIE5

MAG A850GL PCIE5 WHITE

MAG A850GL PCIE5 II

MAG A850GL PCIE5 TOY STORY EDITION

MAG A650GL

X 1

MAG A750GL PCIE5

MAG A750GL PCIE5 II

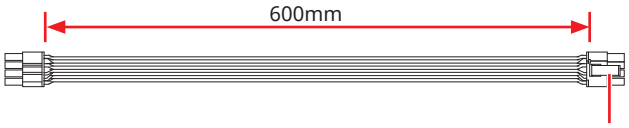

X 1

MAG A750GL PCIE5

MAG A750GL PCIE5 II

PCIe 6+2 contactos

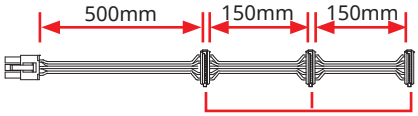

X 2

MAG A650GL

SATA 15 contactos

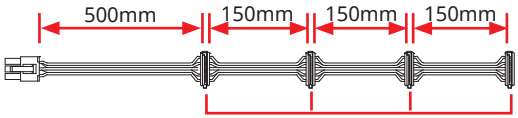

X 2

MAG A850GL PCIE5

MAG A850GL PCIE5 WHITE

MAG A850GL PCIE5 II

MAG A850GL PCIE5 TOY STORY EDITION

MAG A750GL PCIE5

MAG A750GL PCIE5 II

SATA 15 contactos

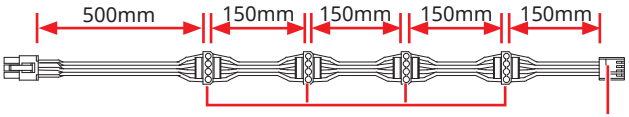

X 1

MAG A850GL PCIE5

MAG A850GL PCIE5 WHITE

MAG A850GL PCIE5 II

MAG A850GL PCIE5 TOY STORY EDITION

MAG A750GL PCIE5

MAG A750GL PCIE5 II

PATA 4 contactos

FDD 4 contactos

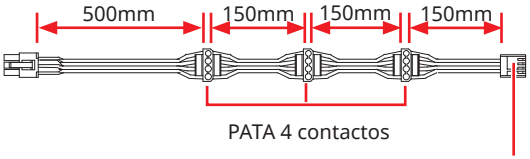

X 1

MAG A650GL

PATA 4 contactos

FDD 4 contactos

Instalación del cable PCIe de 16 contactos

PRECAUCIÓN

Inserte completamente el cable antes de utilizarlo.

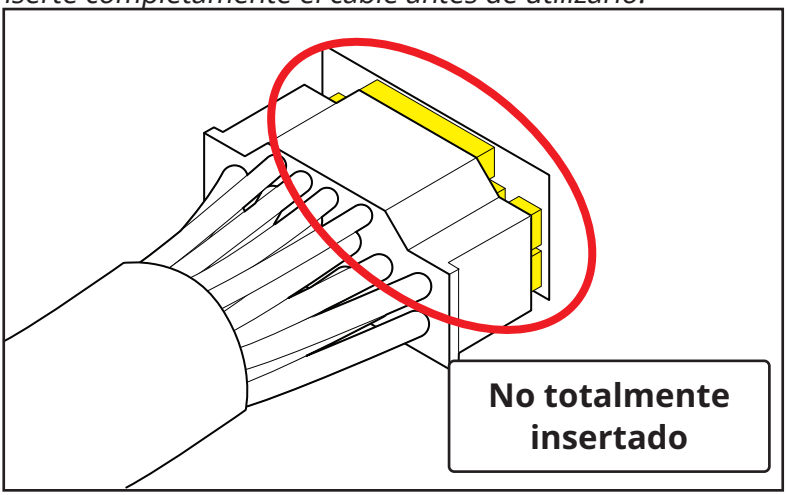

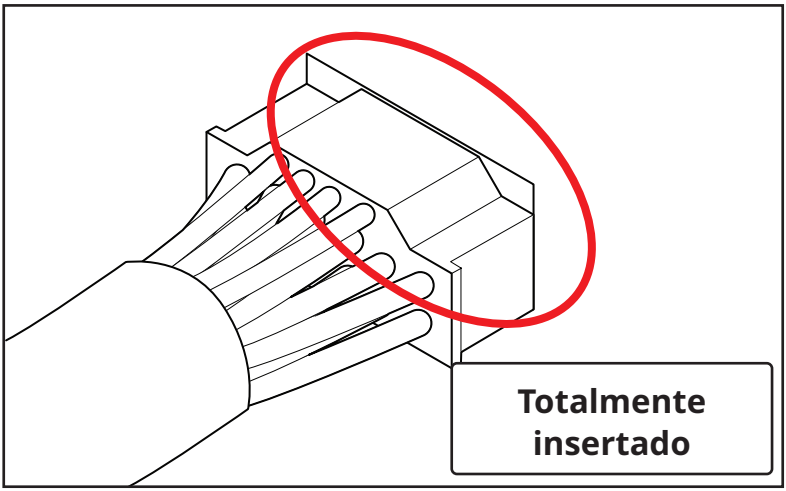

İçindekiler

Teknik Özellikler 2

Boyutlar 3

Güç Konektörü Sayısı 4

Ayrılabilir Konektörler 5

Bağlantı ve Kablo Uzunlukları 6

PCIe 16 Pin Kablo Kurulumu 8

Teknik Özellikler

850W					
Voltaj	+5V	+3,3V	+12V	-12V	+5Vsb
Maks. yük	20,0A	20,0A	70,5A	0,3A	2,5A
Birleşik güç	110W		846W	3,6W	12,5W
Toplam Güç	850W				
Regülasyon	±%3	±%3	±%3	±%10	±%3
Dalgalanma ve Gürültü	40□Vp-p	40□Vp-p	60□Vp-p	80□Vp-p	40□Vp-p

750W					
Voltaj	+5V	+3,3V	+12V	-12V	+5Vsb
Maks. yük	20,0A	20,0A	62,0A	0,3A	2,5A
Birleşik güç	110W		744W	3,6W	12,5W
Toplam Güç	750W				
Regülasyon	±%3	±%3	±%3	±%10	±%3
Dalgalanma ve Gürültü	40□Vp-p	40□Vp-p	60□Vp-p	80□Vp-p	40□Vp-p

650W					
Voltaj	+5V	+3,3V	+12V	-12V	+5Vsb
Maks. yük	20,0A	20,0A	54,0A	0,3A	2,5A
Birleşik güç	100W		648W	3,6W	12,5W
Toplam Güç	650W				
Regülasyon	±%3	±%3	±%3	±%10	±%3
Dalgalanma ve Gürültü	40□Vp-p	40□Vp-p	60□Vp-p	80□Vp-p	40□Vp-p

Boyutlar

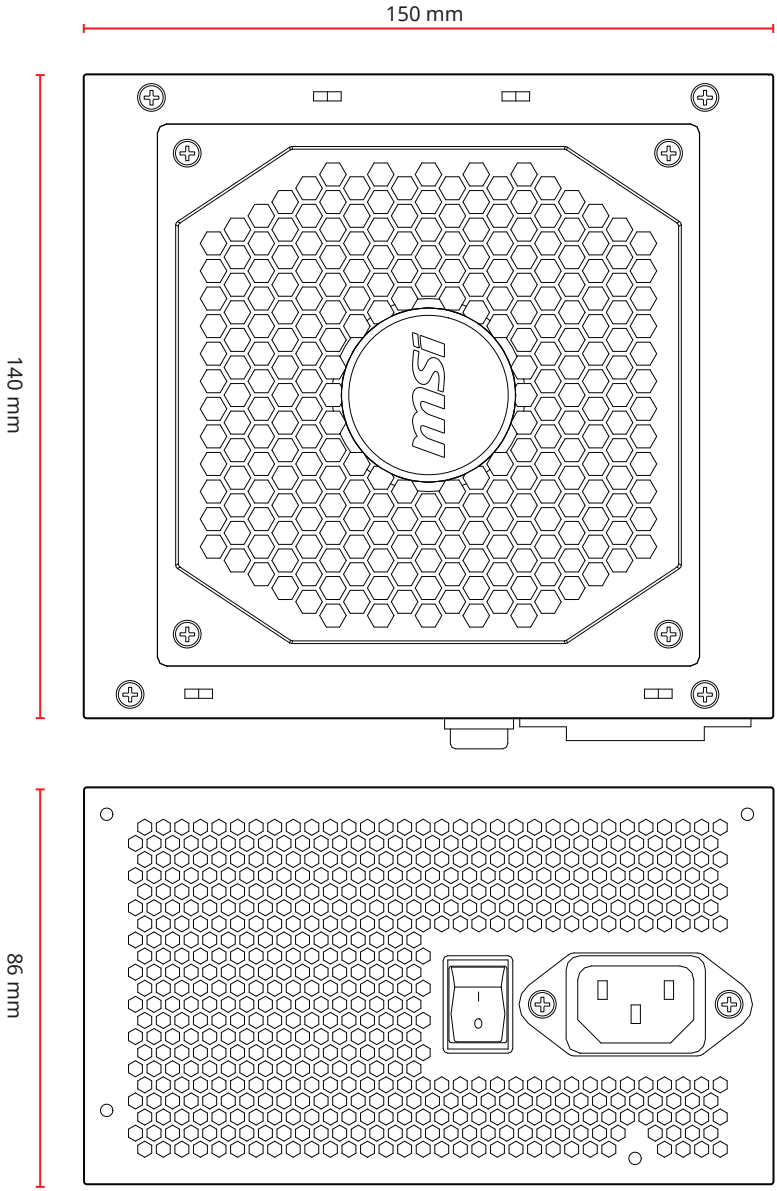

Güç Konektörü Sayısı

Güç Konektörleri	A850GL	A750GL	A650GL
ATX12V (Anakart) 20+4 pin	1	1	1
PCIe 16 pin	1	1	0
EPS12V (CPU) 4+4 pin	2	2	2
PCIe (VGA) 6+2 pin	4	3	4
SATA 15 pin	8	8	6
Çevresel (PATA) 4 pin	4	4	3
FDD 4 pin	1	1	1

Ayrılabilir Konektörler

A850GL & A750GL

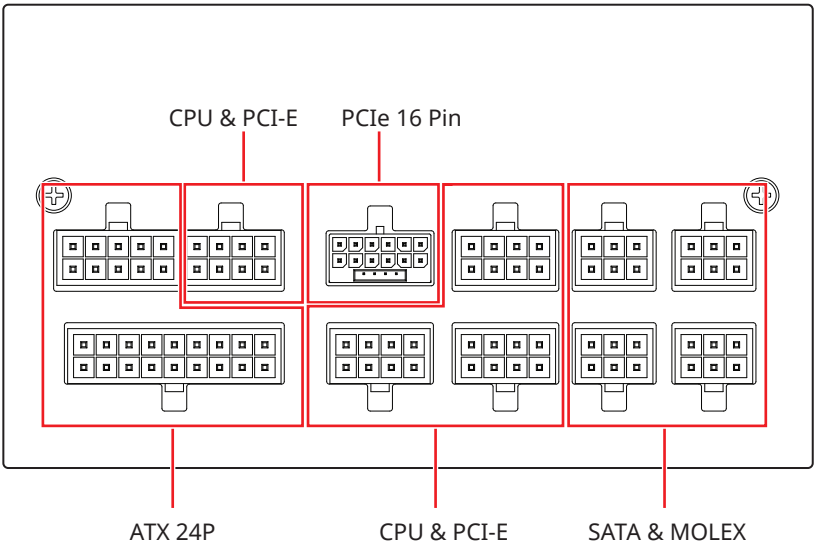

A650GL

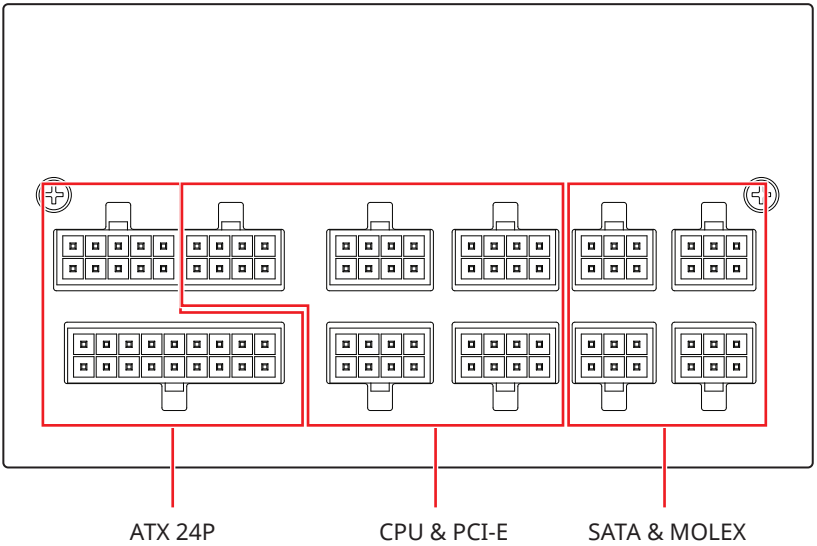

Bağlantı ve Kablo Uzunlukları

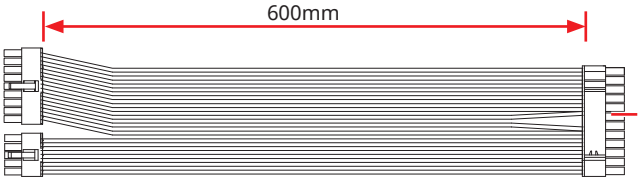

ATX12V
20+4 pin X 1

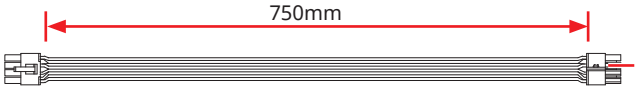

CPU
4+4 pin X 2

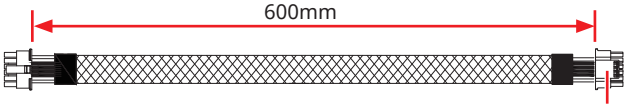

PCIe 16 pin

X 1

MAG A850GL PCIE5

MAG A850GL PCIE5 WHITE

MAG A850GL PCIE5 II

MAG A850GL PCIE5 TOY STORY EDITION

MAG A750GL PCIE5

MAG A750GL PCIE5 II

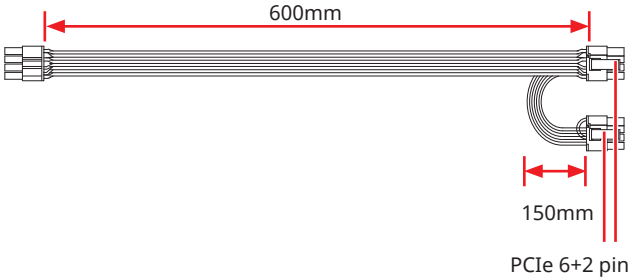

PCIe 6+2 pin

X 2

MAG A850GL PCIE5

MAG A850GL PCIE5 WHITE

MAG A850GL PCIE5 II

MAG A850GL PCIE5 TOY STORY EDITION

MAG A650GL

X 1

MAG A750GL PCIE5

MAG A750GL PCIE5 II

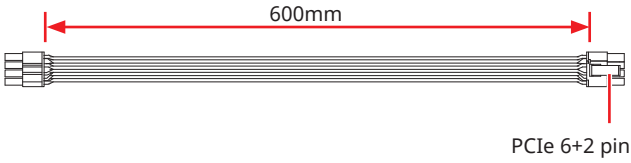

X 1

MAG A750GL PCIE5

MAG A750GL PCIE5 II

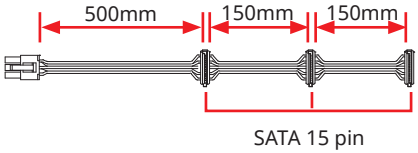

X 2

MAG A650GL

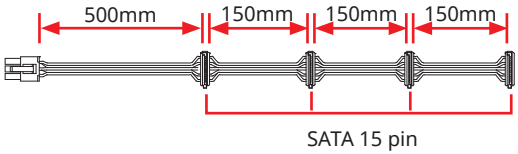

X 2

MAG A850GL PCIE5

MAG A850GL PCIE5 WHITE

MAG A850GL PCIE5 II

MAG A850GL PCIE5 TOY STORY EDITION

MAG A750GL PCIE5

MAG A750GL PCIE5 II

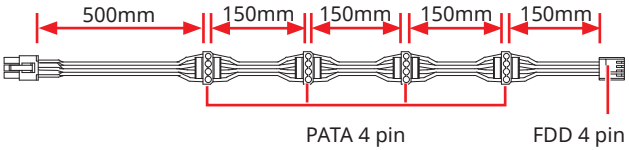

X 1

MAG A850GL PCIE5

MAG A850GL PCIE5 WHITE

MAG A850GL PCIE5 II

MAG A850GL PCIE5 TOY STORY EDITION

MAG A750GL PCIE5

MAG A750GL PCIE5 II

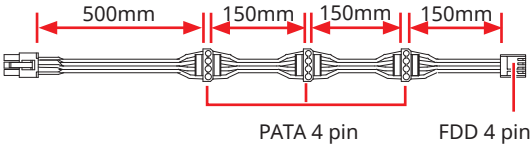

X 1

MAG A650GL

PCIe 16 Pin Kablo Kurulumu

DİKKAT

Kullanmadan önce kabloyu lütfen sonuna kadar takın.

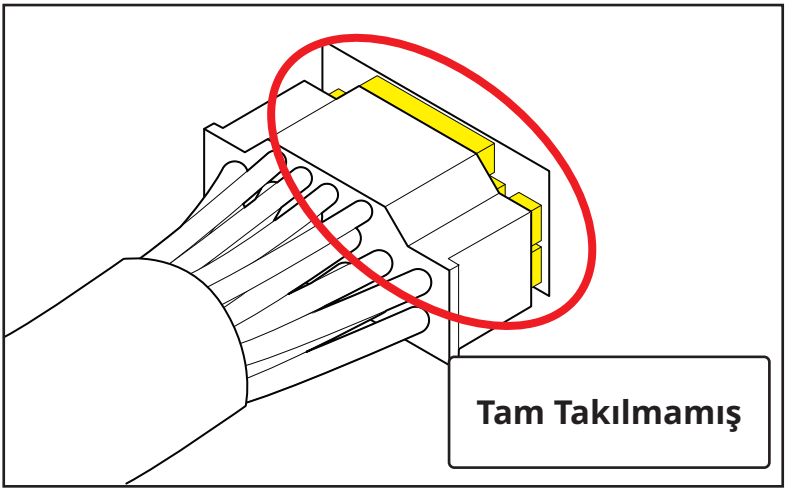

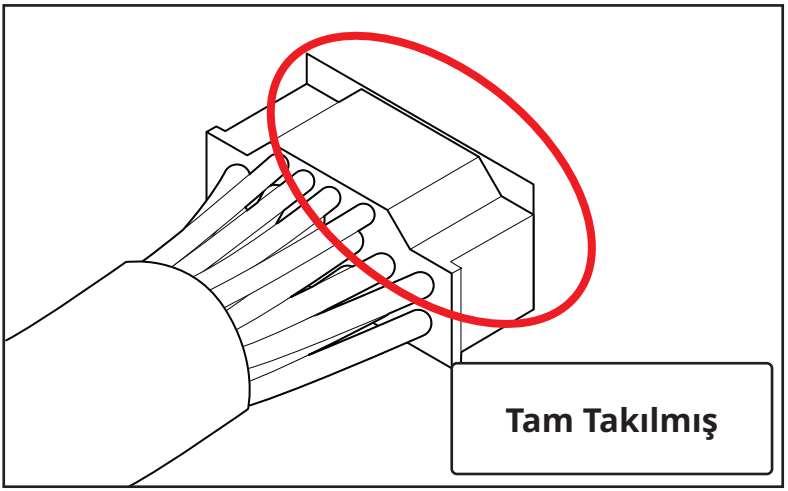

Obsah

Technické údaje 2

Rozměry 3

Počet napájecích konektorů 4

Odnímatelné konektory 5

Možnosti připojení a délka kabelů 6

Instalace 16 kolíkového kabelu PCIe 8

Technické údaje

850 W					
Napětí	+5 V	+3,3 V	+12 V	-12 V	+5Vsb
Maximální zatížení	20,0 A	20,0 A	70,5 A	0,3 A	2,5 A
Kombinovaný výkon	110 W		846 W	3,6 W	12,5 W
Celkový výkon	850 W				
Regulace	±3%	±3%	±3%	±10%	±3%
Zvlnění a šum	40 mVp-p	40 mVp-p	60 mVp-p	80 mVp-p	40 mVp-p

750 W					
Napětí	+5 V	+3,3 V	+12 V	-12 V	+5Vsb
Maximální zatížení	20,0 A	20,0 A	62,0 A	0,3 A	2,5 A
Kombinovaný výkon	110 W		744 W	3,6 W	12,5 W
Celkový výkon	750 W				
Regulace	±3%	±3%	±3%	±10%	±3%
Zvlnění a šum	40 mVp-p	40 mVp-p	60 mVp-p	80 mVp-p	40 mVp-p

650 W					
Napětí	+5 V	+3,3 V	+12 V	-12 V	+5Vsb
Maximální zatížení	20,0 A	20,0 A	54,0 A	0,3 A	2,5 A
Kombinovaný výkon	100 W		648 W	3,6 W	12,5 W
Celkový výkon	650 W				
Regulace	±3%	±3%	±3%	±10%	±3%
Zvlnění a šum	40 mVp-p	40 mVp-p	60 mVp-p	80 mVp-p	40 mVp-p

Rozměry

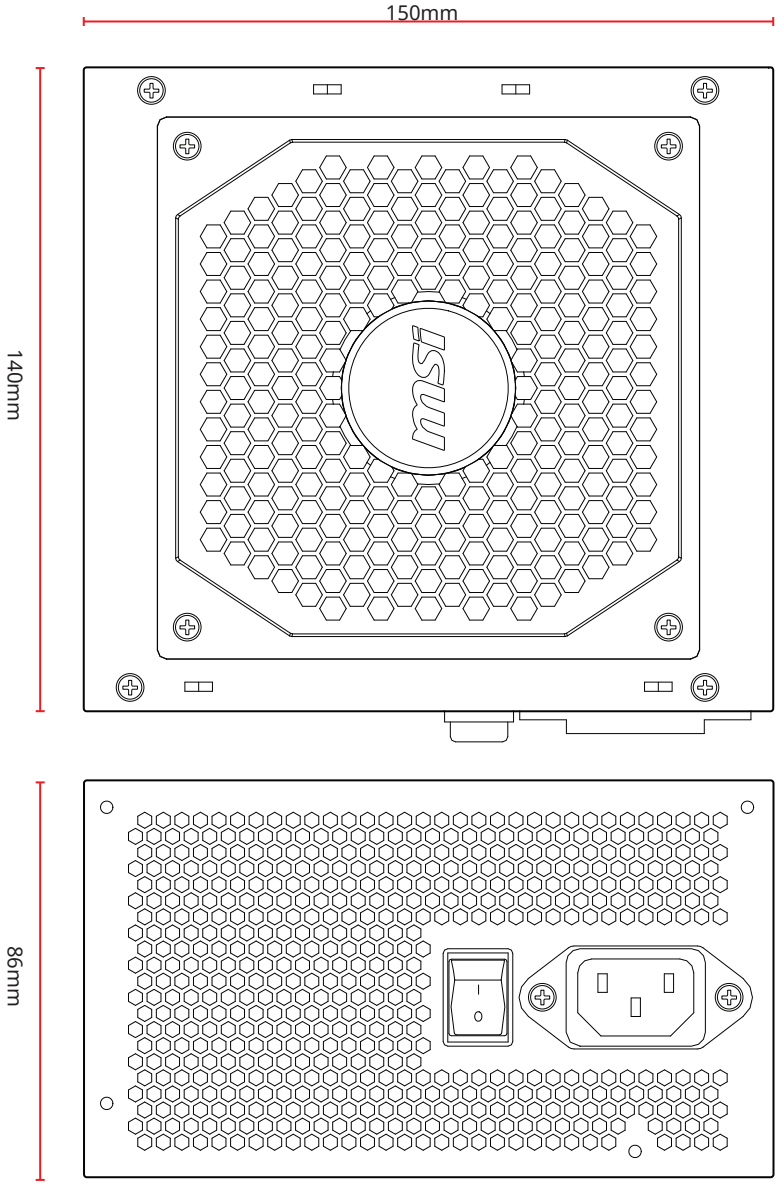

Počet napájecích konektorů

Napájecí konektory	A850GL	A750GL	A650GL
ATX12V (základní deska) 20+4 kolíky	1	1	1
PCIe 16 kolíků	1	1	0
EPS12V (CPU) 4+4 kolíky	2	2	2
PCIe (VGA) 6+2 kolíky	4	3	4
SATA 15 kolíků	8	8	6
Periferní (PATA) 4 kolíky	4	4	3
FDD 4 kolíky	1	1	1

Odnímatelné konektory

A850GL a A750GL

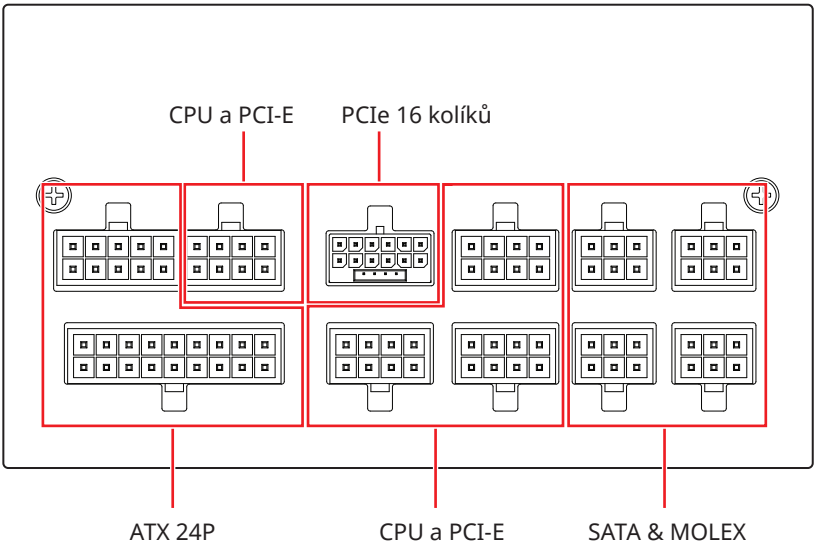

A650GL

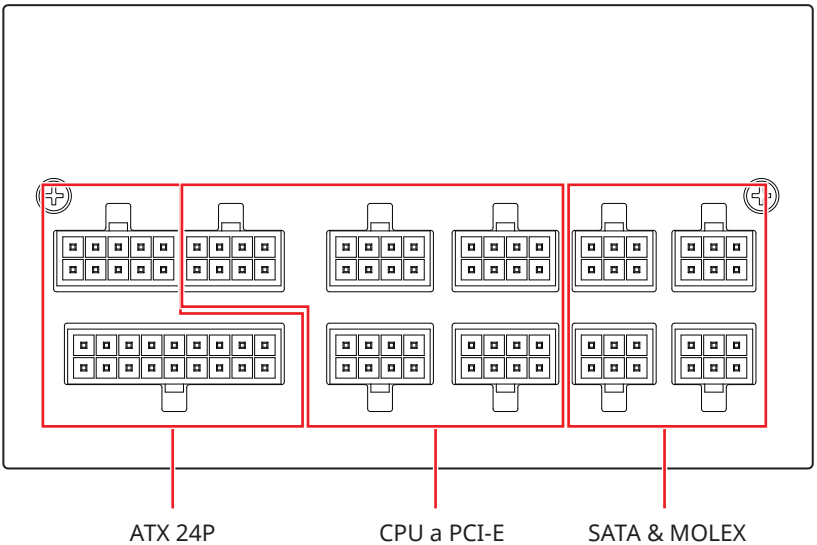

Možnosti připojení a délka kabelů

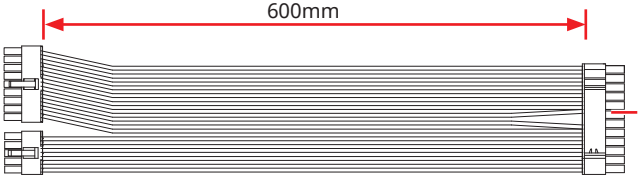

X 1

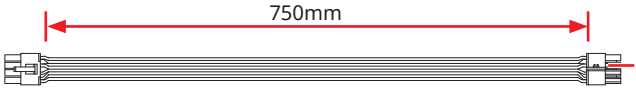

X 2

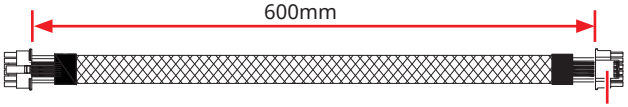

X 1

MAG A850GL PCIE5

MAG A850GL PCIE5 WHITE

MAG A850GL PCIE5 II

MAG A850GL PCIE5 TOY STORY EDITION

MAG A750GL PCIE5

MAG A750GL PCIE5 II

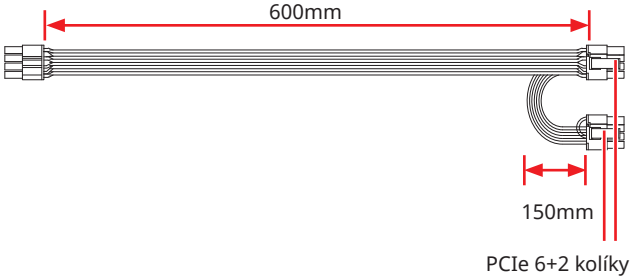

X 2

MAG A850GL PCIE5

MAG A850GL PCIE5 WHITE

MAG A850GL PCIE5 II

MAG A850GL PCIE5 TOY STORY EDITION

MAG A650GL

X 1

MAG A750GL PCIE5

MAG A750GL PCIE5 II

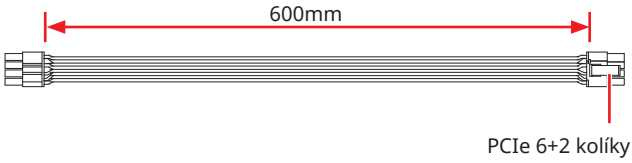

X 1

MAG A750GL PCIE5

MAG A750GL PCIE5 II

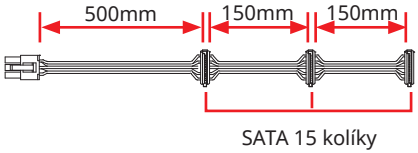

X 2

MAG A650GL

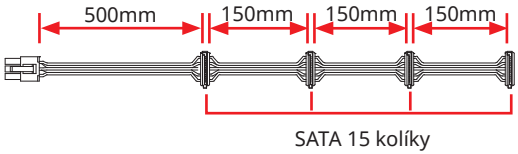

X 2

MAG A850GL PCIE5

MAG A850GL PCIE5 WHITE

MAG A850GL PCIE5 II

MAG A850GL PCIE5 TOY STORY EDITION

MAG A750GL PCIE5

MAG A750GL PCIE5 II

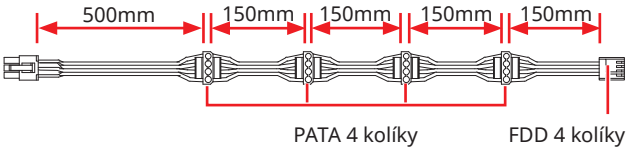

X 1

MAG A850GL PCIE5

MAG A850GL PCIE5 WHITE

MAG A850GL PCIE5 II

MAG A850GL PCIE5 TOY STORY EDITION

MAG A750GL PCIE5

MAG A750GL PCIE5 II

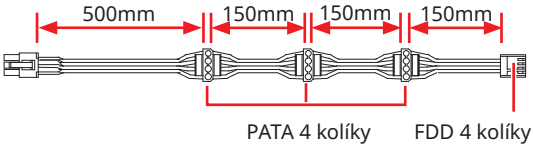

X 1

MAG A650GL

Instalace 16 kolíkového kabelu PCIe

POZOR

Před použitím kabel zcela zasuňte.

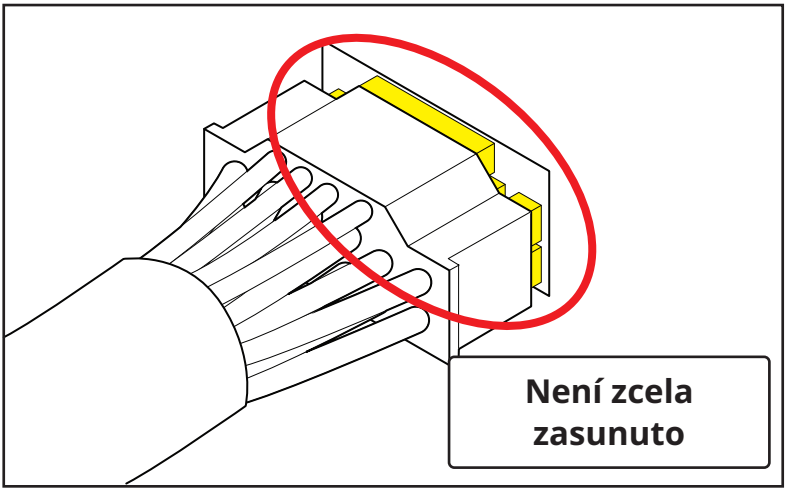

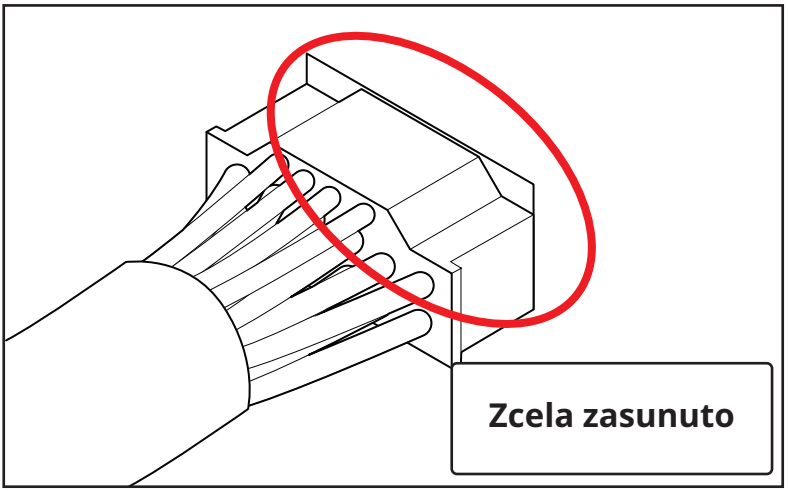

Obsah

Technické údaje 2

Rozmery 3

Počet napájacích konektorov 4

Odpojiteľné konektory 5

Možnosti pripojenia a dĺžky káblov 6

Inštalácia kábla PCIe so 16 kolíkmi 8

Technické údaje

850 W					
Napätie	+5V	+3,3V	+12V	-12V	+5Vsb
Max. záťaž	20,0 A	20,0 A	70,5 A	0,3 A	2,5 A
Kombinovaný výkon	110 W		846 W	3,6 W	12,5 W
Celkový výkon	850 W				
Regulácia	±3%	±3%	±3%	±10%	±3%
Zvlnenie a šum	40 mVš-š	40 mVš-š	60 mVš-š	80 mVš-š	40 mVš-š

750 W					
Napätie	+5V	+3,3V	+12V	-12V	+5Vsb
Max. záťaž	20,0 A	20,0 A	62,0 A	0,3 A	2,5 A
Kombinovaný výkon	110 W		744 W	3,6 W	12,5 W
Celkový výkon	750 W				
Regulácia	±3%	±3%	±3%	±10%	±3%
Zvlnenie a šum	40 mVš-š	40 mVš-š	60 mVš-š	80 mVš-š	40 mVš-š

650 W					
Napätie	+5V	+3,3V	+12V	-12V	+5Vsb
Max. záťaž	20,0 A	20,0 A	54,0 A	0,3 A	2,5 A
Kombinovaný výkon	100 W		648 W	3,6 W	12,5 W
Celkový výkon	650 W				
Regulácia	±3%	±3%	±3%	±10%	±3%
Zvlnenie a šum	40 mVš-š	40 mVš-š	60 mVš-š	80 mVš-š	40 mVš-š

Rozmery

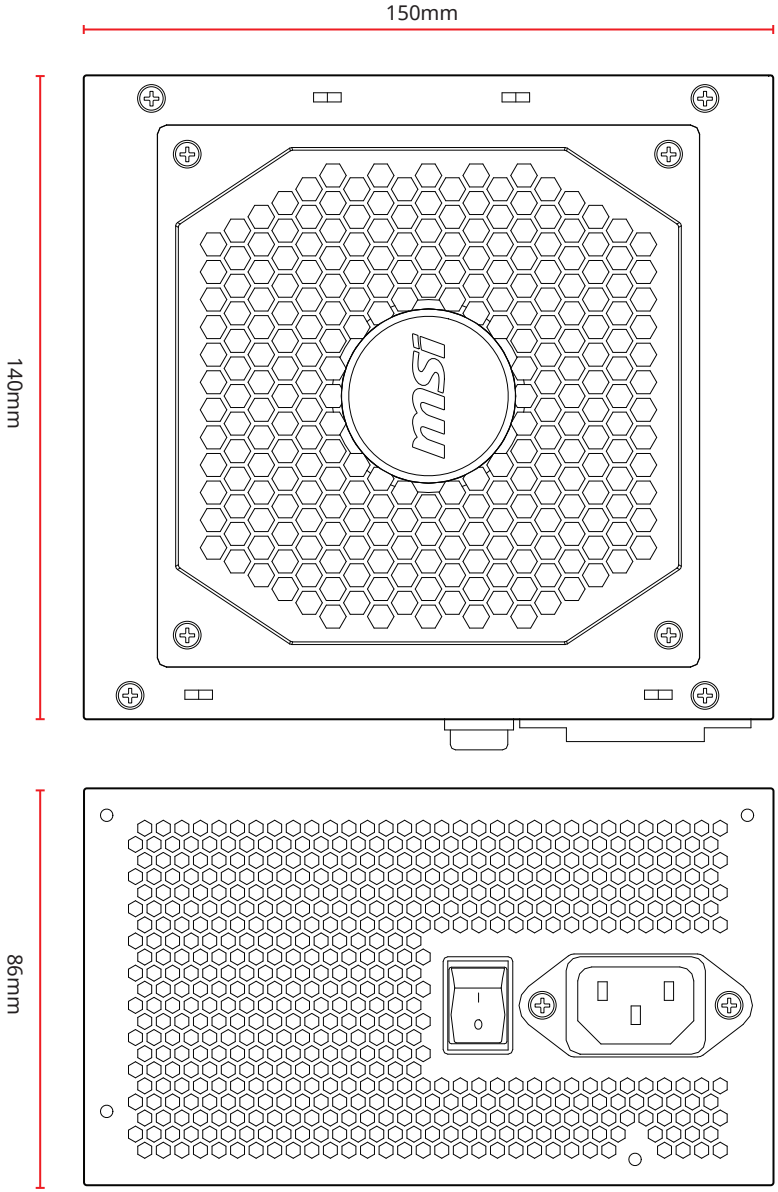

Počet napájacích konektorov

Napájacie konektory	A850GL	A750GL	A650GL
ATX12V (základná doska) 20+4 kolíkov	1	1	1
PCIe 16 kolíkov	1	1	0
EPS12V (CPU) 4+4 kolíkov	2	2	2
PCIe (VGA) 6+2 kolíkov	4	3	4
SATA 15 kolíkov	8	8	6
Periférne zariadenia (PATA) 4 kolíky	4	4	3
FDD 4 kolíky	1	1	1

Odpojiteľné konektory

MAG A850GL & MAG A750GL

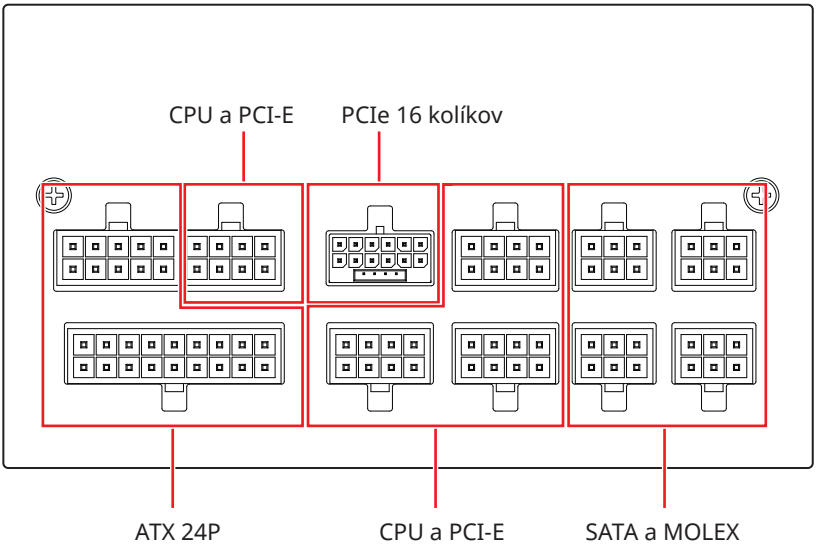

MAG A650GL

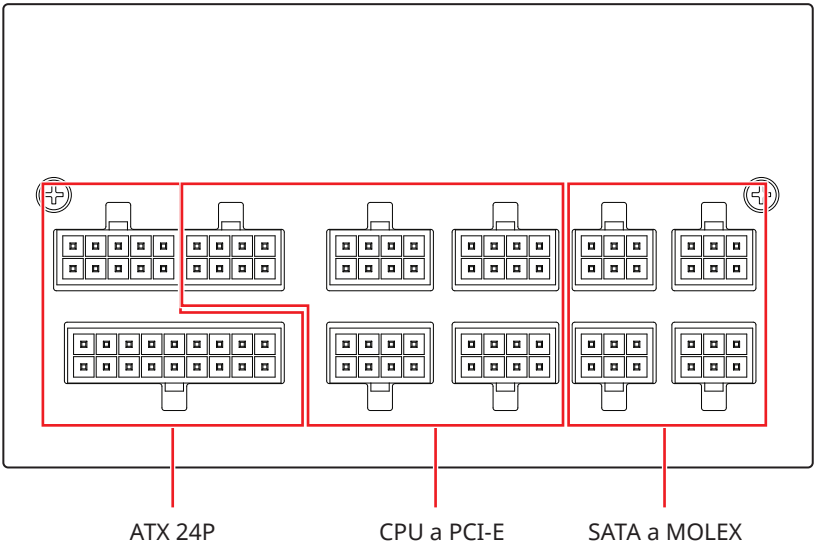

Možnosti pripojenia a dĺžky káblov

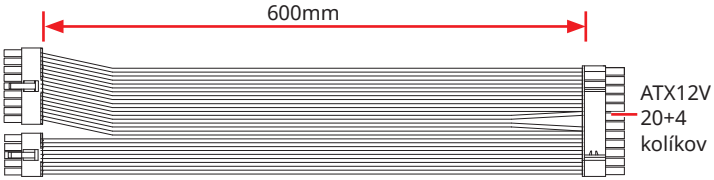

X 1

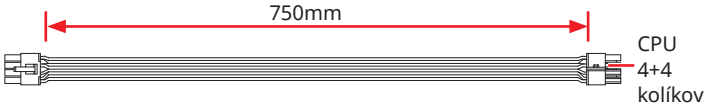

X 2

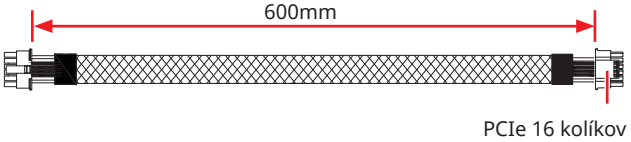

X 1

MAG A850GL PCIE5

MAG A850GL PCIE5 WHITE

MAG A850GL PCIE5 II

MAG A850GL PCIE5 TOY STORY EDITION

MAG A750GL PCIE5

MAG A750GL PCIE5 II

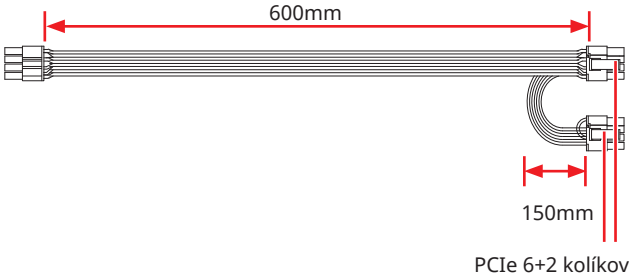

X 2

MAG A850GL PCIE5

MAG A850GL PCIE5 WHITE

MAG A850GL PCIE5 II

MAG A850GL PCIE5 TOY STORY EDITION

MAG A650GL

X 1

MAG A750GL PCIE5

MAG A750GL PCIE5 II

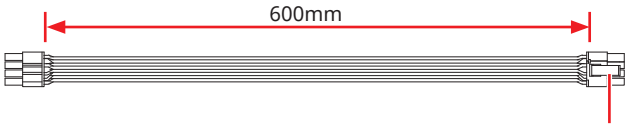

X 1

MAG A750GL PCIE5

MAG A750GL PCIE5 II

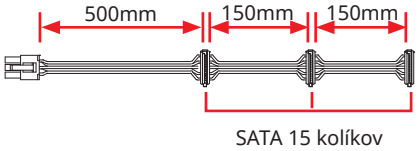

X 2

MAG A650GL

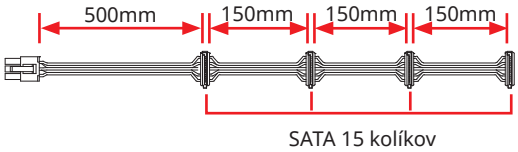

X 2

MAG A850GL PCIE5

MAG A850GL PCIE5 WHITE

MAG A850GL PCIE5 II

MAG A850GL PCIE5 TOY STORY EDITION

MAG A750GL PCIE5

MAG A750GL PCIE5 II

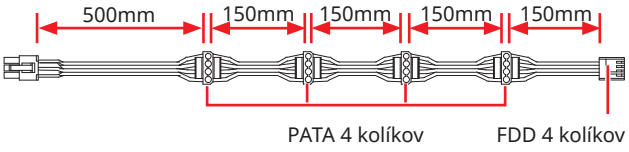

X 1

MAG A850GL PCIE5

MAG A850GL PCIE5 WHITE

MAG A850GL PCIE5 II

MAG A850GL PCIE5 TOY STORY EDITION

MAG A750GL PCIE5

MAG A750GL PCIE5 II

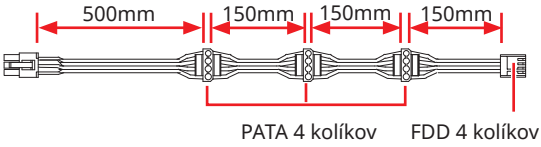

X 1

MAG A650GL

Inštalácia kábla PCIe so 16 kolíkmi

UPOZORNENIE

Pred použitím úplne pripojte kábel.

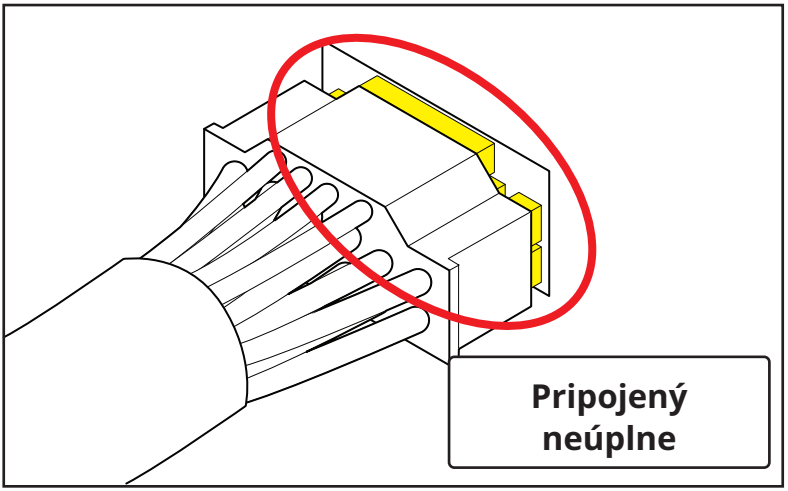

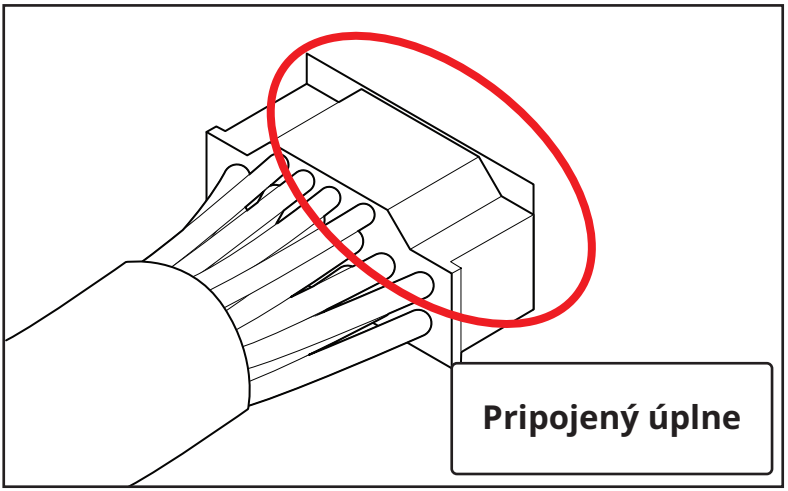

Regulatory Notices

KC인증서

MAG A850GL PCIE5, MAG A850GL PCIE5 WHITE, MAG A850GL PCIE5 II, MAG A850GL PCIE5 TOY STORY EDITION

XU100111-23113A
R-R-MSI-MAGA850GL

제품명: 컴퓨터용 전원공급장치
모델: MAG A850GL PCIE5
A/S TEL: 1644-4038
제조자: Channel Well Technology (Guangzhou) Co., Ltd.
제조국가: 중국

MAG A750GL PCIE5, MAG A750GL PCIE5 II

XU100111-23112A
R-R-MSI-MAGA850GL

제품명: 컴퓨터용 전원공급장치
모델: MAG A750GL PCIE5
A/S TEL: 1644-4038
제조자: Channel Well Technology (Guangzhou) Co., Ltd.
제조국가: 중국

MAG A650GL

XU100111-23111A
R-R-MSI-MAGA650GL

제품명: 컴퓨터용 전원공급장치
모델: MAG A650GL
A/S TEL: 1644-4038
제조자: Channel Well Technology (Guangzhou) Co., Ltd.
제조국가: 중국

Model Number

Model No.: 7ZP8A. 7ZP8B. 7ZP8C