ORIGINAL QUALITY OE

AEROVANTAGE

PREMIUM QUALITY WIPER BLADES

LEFT HAND DRIVE

CATCM1805

2019

2020

FEDERAL-MOGUL MOTORPARTS

THERE'S A CHAMPION IN HERE

TAKE A HEAD START
EXPAND YOUR KNOWLEDGE ON CHAMPION PARTS

Visit our website and find out everything you need to know about the Champion Range.

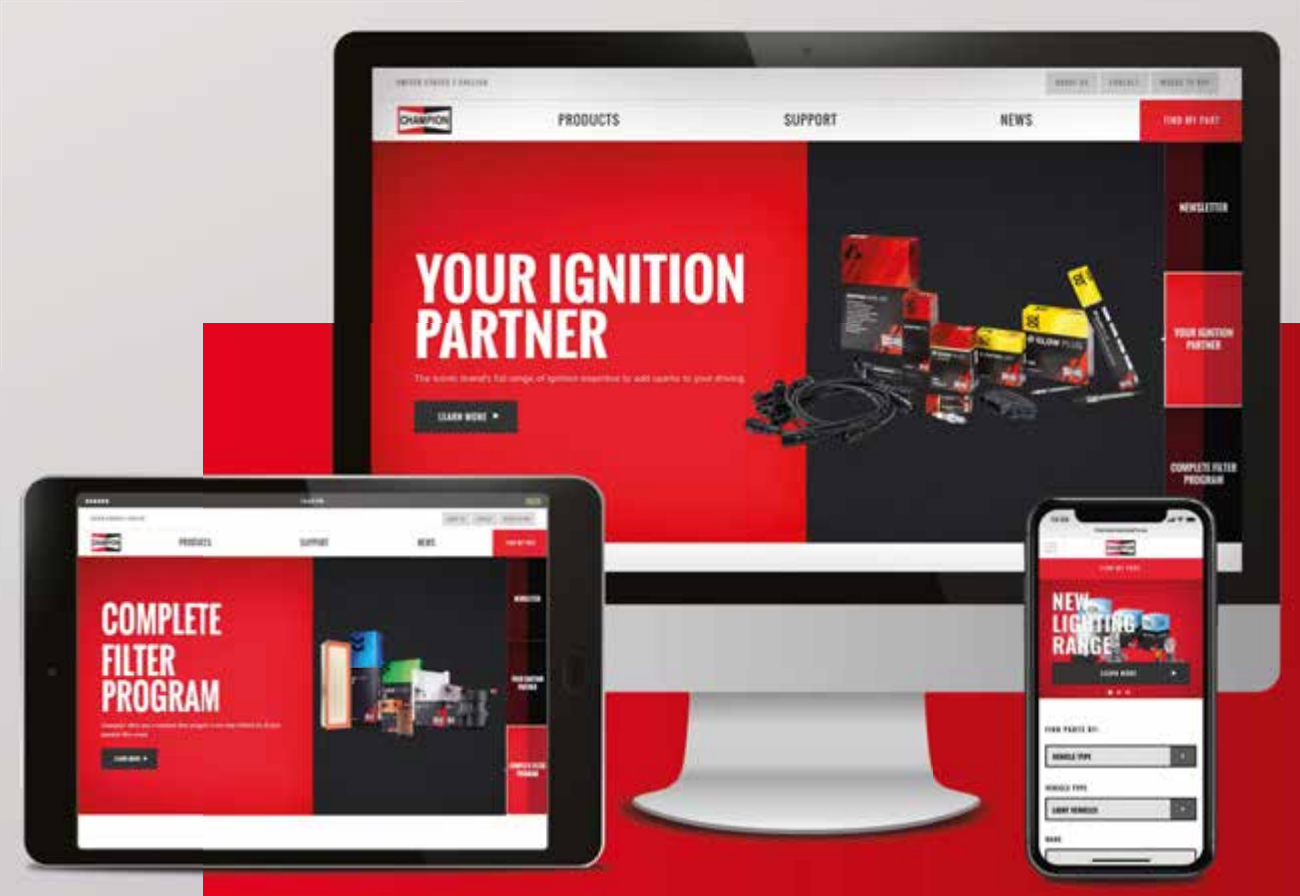

- Stay informed about new Champion Autoparts
- Discover the full Champion range: Ignition, Filters, Wipers, Lighting, Braking and Batteries
- Solve your installation issues with trouble tracers
- Watch our instructional installation videos
- ... and much, much more

www.championautoparts.eu

Table of contents

AEROVANTAGE II

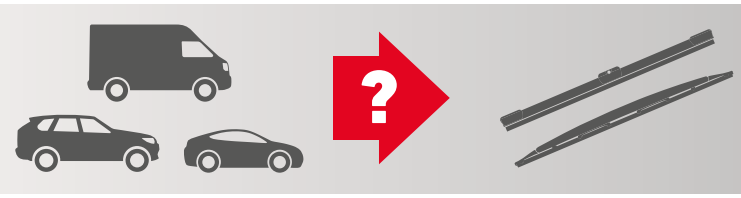

1

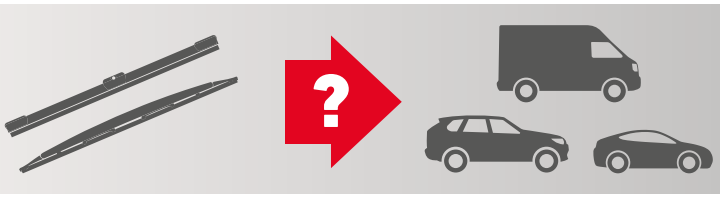

109

AEROVANTAGE 150

Premium original fit wipers for over 98%* of all vehicles

Champion now offers a completely re-engineered range of premium quality Aerovantage wipers for both passenger cars and commercial vehicles under one brand.

Matching OE technology

- Aerovantage wipers are **designed to deliver first class wiping** results and levels of durability that meet or exceed the performance of OE wipers.

ORIGINAL QUALITY OE

The benefits of Aerovantage

- Matching OE design for all **flat blades, metal blades hybrid and rear blades**.
- **A full range of single blades** coupled with an extensive program of **application specific kits** for all car makes.
- **Maximum choice in OE quality**.

MOBILE WEBSITE

Packaging with QR code

- **Striking graphics** for greater customer appeal.
- **Flat blades** in Pillow pack.
- **QR code** for easy wiper blade selection and installation.
- **Detailed application data/fitting instructions** on every pack.
- "Priospot" **anti-counterfeit protection**.

Champion part numbering system: easier to understand, quicker to find!

A FL 53 A

Sub-brand
A = Aerovantage

Wiper Type
S = Spoiler
F = Flat
H = Hybrid
P = Plastic
W = Wet (wash kit)
C = Curved
- = Standard

L/R hand drive
L = Left hand drive
R = Right hand drive
U = Universal (LHD & RHD)

Numbers = wiper size (cm)
Two digits = length of single blade
Four digits = length of both blades in a kit

Fitting variant
(A, B, C...)

More info? Just go to **www.championaerovantage.com**

*Source : FMPI/TecDoc : Parc Coverage Summary (for more info : www.tecalliance.net/en/company) 2018

MULTI-FIT SINGLE BLADES DEDICATED KIT RANGE

- Champion's Aerovantage Flat blades are designed to meet **the stringent standards demanded by original equipment customers**.
- **Asymmetric precision spoiler** designed to reduce wind lift at high speed.
- Unique rubber formulation ensures **optimum screen contact** and **outstanding wipe quality** even in **extreme temperatures**.
- Market leading **CHAMPION Master Connector System** delivers **wide application coverage and** guarantees they are **simple to replace** and fit perfectly **on any vehicle**.

The benefits of the Aerovantage flat blade range:

- Manufactured to **OE specifications**.
- A **complete program** offering extensive coverage across all vehicle makes.
- A compact range of single blades – in striking blister packaging.
- A **comprehensive range** of **dedicated kits**, specifically designed with the **professional user in mind**.
- Single blades and kits **100% interchangeable** and fully **compatible** with the catalogued applications.

ALL-METAL STANDARD BLADE WITH UNIVERSAL CONNECTOR

CHAMPION low mass metal wiper blade – key features:

- **Pre-fitted multi-function connector** with **anti-rotational feature** which prevents the blade from flipping upside down when cleaning the windscreen.
- **OE grade wiper element** for extended service life, increased abrasion resistance, and reduced noise.
- **Integrated connector rivet** – provides high structural strength against side load impact.
- **Extruded lug articulations and integrated bearings** ensure smooth, well controlled joint rotation to reduce lateral play and juddering.
- **Upright claw design** allows for smooth rubber movement throughout the sweep of the blade.

The benefits of Aerovantage metal blade wipers:

- Simple to fit.
- Tough and durable.
- Low friction.
- Higher wipe quality.
- Less wind lift.

- Available **as single and/or kits.**
- Packaged in **high quality blister packaging.**
- Fully featured – **standard, spoiler, wet and curved varieties.**

FOR ASIAN VEHICLES

CHAMPION "hybrid" blades – designed for Asian vehicles.

Hybrid blades share features of both conventional and flat blades:

- **Articulated plastic frame** with conventional hook type connection.
- **Steel sub-structure** supporting twin spring flexors and rubber wiping element.
- **Aerodynamic shape** acts as air spoiler for improved wiper performance.
- **Curved or bowed flexor shape** equalizes pressure along the blade to optimize contact with the windscreen.

The benefits of Aerovantage hybrid wipers:

- Matching OE technology on **Asian, American and European vehicles**.
- Simple to fit - standard **hook connection**.
- Aerodynamic spoiler design **reduces wind lift and improves water clearance**.
- Graphite coated element **reduces friction and noise**.
- Full range of sizes (35 to 65cm) provide **maximum parc coverage**.

Hybrid blades are fitted as original equipment by:

Acura, Buick, Cadillac, Chevrolet, Citroën, Honda, Hyundai, Infiniti, Kia, Lancia, Land Rover, Lexus, Mazda, Mitsubishi, Nissan, Opel, Peugeot, Saab, Scion, Subaru, Toyota, Vauxhall

WORN WIPERS ARE DANGEROUS
CHANGE YOUR WIPERS IN TIME

Good visibility

A perfect wipe? You must be using brand new Champion wipers. One or two minor streaks in the margins of the windscreen this is acceptable.

Wind lift

If the wiper "misses" parts of the windscreen at high speed, replace the wiper blades and check the wiper arm for damage or wear - replace if necessary.

Unwashed areas

Deterioration of wiper blade linkage or decreased wiper pressure can leave parts of the windscreen unwashed.

Permanent small streaks

Multiple and recurring streaks in the central part of the windshield are indicators the wiper is due for replacement. We recommend you change your wipers at the next opportunity.

Lace curtains

Lack of use can result in deformation of the wiper blade lip causing a veil effect across the windscreen – particularly dangerous at night. Change your wipers as soon as possible.

Chatter hopping

Deformed wiper rubber, worn linkage or wiper arm can cause juddering across the screen leaving behind radial streaks. Change your wiper blades and replace other parts as necessary.

Noisy

Noisy wipers may be a sign that the wiper element is deformed or hardened or that the wiper blade structure is worn. Time to replace them.

Lines or bands

Wiper rubber wears out or becomes damaged with age resulting in thick bands of uncleared water left on the windscreen. Change your wipers straight away.

FIND THE RIGHT WIPER FOR YOUR CAR!

www.championautoparts.eu

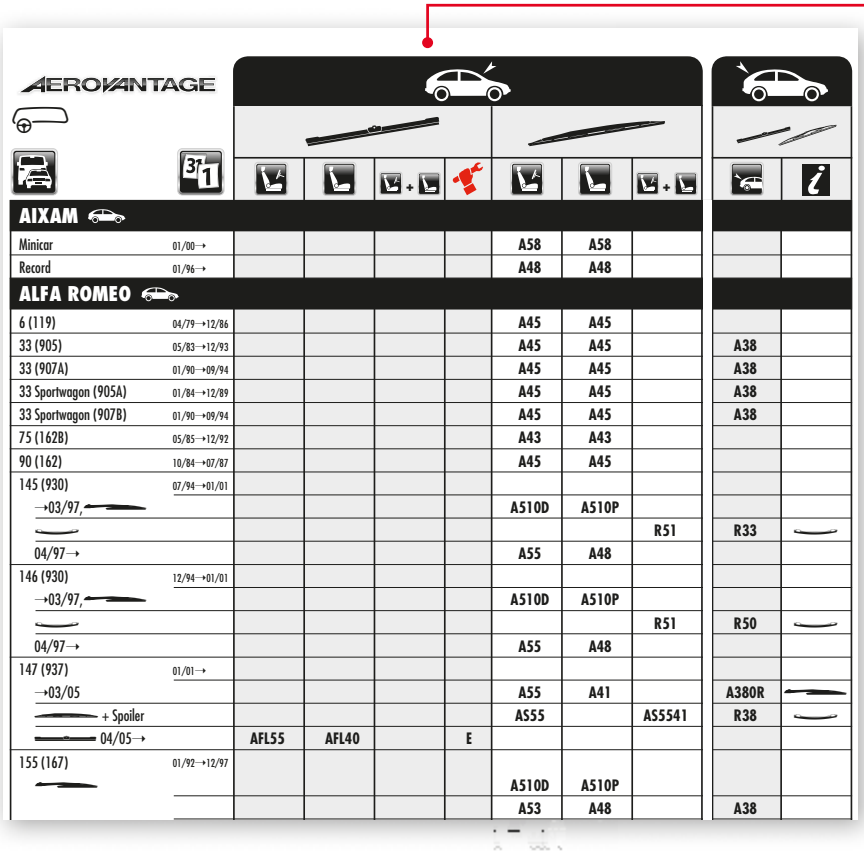

AEROVANTAGE										
AIXAM										
Minicar	01/00→					A58	A58			
Record	01/96→					A48	A48			
ALFA ROMEO										
6 (119)	04/79→12/86					A45	A45			
33 (905)	05/83→12/93					A45	A45		A38	
33 (907A)	01/90→09/94					A45	A45		A38	
33 Sportwagon (905A)	01/84→12/89					A45	A45		A38	
33 Sportwagon (907B)	01/90→09/94					A45	A45		A38	
75 (162B)	05/85→12/92					A43	A43			
90 (162)	10/84→07/87					A45	A45			
145 (930)	07/94→01/01									
→03/97,						A510D	A510P			
								R51	R33	
04/97→						A55	A48			
146 (930)	12/94→01/01									
→03/97,						A510D	A510P			
								R51	R50	
04/97→						A55	A48			
147 (937)	01/01→									
→03/05						A55	A41		A380R	
+ Spoiler						A555		A55541	R38	
04/05→		AFL55	AFL40		E					
155 (167)	01/92→12/97					A510D	A510P			
						A53	A48		A38	

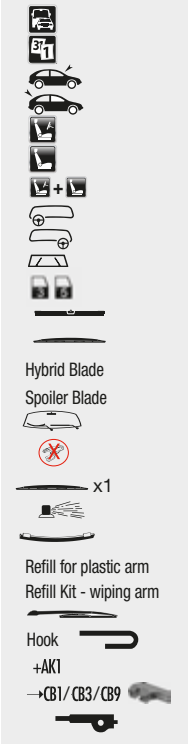

EN

Type and Make (Car/Van)
Production Period Car
Front Screen
Rear Screen
Driver Side
Passenger Side
Kit
For Left Hand Drive
For Right Hand Drive
Opposing wipers (Butterfly)
3-doors / 5-doors
OE Flat Blade
Conventional Blade
Hybrid Blade
Spoiler Blade
Curved passenger Blade
Flat Blades
(cover cannot be refitted)
Mono Blade
Integrated washer spray
Refill Kit
Refill for plastic arm
Refill Kit - wiping arm
Wiping Arm
Hook Connection
Use AK1 Kit
Use CB1, CB3 or CB9 Connector
Side fitting pin

FR

Type et Marque (Voiture / VUL)
A partir de... --> Jusqu'à
Pare-brise avant
Pare-brise arrière
Côté conducteur
Côté passager
Kit
Pour conduite à gauche
Pour conduite à droite
Système papillon (balais opposés)
3 portes / 5 portes
Balais plats d'origine
Balais conventionnels
Balais hybrides
Balais avec spoiler
Balais côté passager courbés
Balais plats
(ne peut pas être rééquipé)
Balai unitaire
Rampe de lavage intégrée
Kit de renouvellement
Renouvellement pour bras plastiques
Kit de renouvellement - bras balais
Bras balais
Connexion crochet
Utilisez le kit AK1
Utilisez le connecteur CB1, CB3 ou CB9
Attache sur le côté

DE

Fahrzeugtyp u. -hersteller (Pkw/Transporter)
Baujahr
Frontscheibe
Heckscheibe
Fahrerseite
Beifahrerseite
Satz
Für Linkslenkung
Für Rechtslenkung
Gegenläufige Wischer (Schmetterlingssystem)
3-Türer/5-Türer
OE-Flachwischblatt
Herkömmliches Wischblatt
Hybird-Wischblatt
Spoiler-Wischblatt
Gebogenes Wischblatt
Flachwischblatt

Einzelnes Wischblatt
Mit integrierten Wischdüsen
Ersatz-Wischblattgummi
Ersatz-Wischblattgummi für Wischerarm aus Kunststoff
Ersatz-Wischblattgummi - Wischerarm
Wischerarm
Hakenanschluss
Verwenden Sie den AK1-Satz
Verwenden Sie den CB1-, CB3- oder CB9-Adapter
Side-Pin

IT

Tipo e Marca (Vettura/Furgone)
Vettura - anno
Parabrezza
Lunotto posteriore
Lato conducente
Lato passeggero
Kit
Per guida a sinistra
Per guida a destra
Tergicristalli a farfalla
3 porte / 5 porte
Spazzola piatta OE
Spazzola convenzionale
Spazzole ibride
Spazzole spoilerate
Spazzole curve lato passeggero
Spazzole piatte (la protezione non
può essere rimontata)
Spazzola singola
Con spruzzatore integrato
Kit refil
Refil per braccio in plastica
Refil per braccio spazzolante
Braccio spazzolante
Connessione a gancio
Usare kit AK1
Usare connettore CB1, CB3 o CB9
Montaggio ad innesto laterale

ES

Tipo y constructor (coche/furgoneta)
Fecha de fabricación
Parabrisas delantero
Parabrisas trasero
Posición conductor
Posición pasajero
Kit
Conducción con volante a la izquierda
Conducción con volante a la derecha
Escobillas opuestas (sistema mariposa)
3 puertas / 5 puertas
Escobilla plana de equipo original
Escobilla convencional
Escobilla híbrida
Escobilla con deflector
Escobilla de turismo curvada
Escobillas plana
(La cobertura no puede volverse a montar)
Escobilla única
Difusor integrado
Kit de repuesto
Repuesto para brazo plástico
Kit de repuesto - brazo limpiaparabrisas
Brazo limpiaparabrisas
Conector en gancho
Usar kit AK1
Usar conector CB1, CB3 o CB9
Fijación lateral

RU

Тип и производитель (легковой автомобиль/фургон)
Период выпуска
Переднее стекло
Заднее стекло
Сторона водителя
Сторона пассажира
Комплект
Для автомобиля с левосторонним управлением
Для автомобиля с правосторонним управлением
Противостоящие стеклоочистители (бабочка)
3 двери / 5 дверей
Бескаркасная щетка оригинального качества OE
Щетка каркасного типа
Щетка гибридного типа
Щетка со спойлером
Щетка с изогнутым профилем - сторона пассажира
Бескаркасные щетки (замена накладки невозможна)
Моно-щетка
Щетка со встроенными форсунками омывателя
Комплект резиноэлемента
Резиноэлемент для пластиковой щетки
Комплект резиноэлемента для щетки-рычага
Щетка-рычаг
Разъем-крючок
Используйте комплект AK1
Используйте разъем CB1, CB3 или CB9
Боковой штифт

PL

Typ i marka (osobowy/dostawczy)
Okres produkcji pojazdu
Przednia szyba
Tylna szyba
Strona kierowcy
Strona pasażera
Zestaw
Kierownica po lewej
Kierownica po prawej
Wycieraczki przeciwbieżne (“motyl”)
3-drzwi / 5-drzwi
Pióro płaskie oryginalne (OE)
Pióro konwencjonalne
Pióro hybrydowe
Pióro ze spojlerem
Zakrzywione pióro pasażera
Pióra płaskie (pokrywa jednorazowa)
Pióro pojedyncze (mono)
Zintegrowany spryskiwacz
Zestaw naprawczy
Zestaw do ramion plastikowych
Zestaw naprawczy ramienia wycieraczki
Ramię wycieraczki
Złącze haczykowe
Użyj zestawu AK1
Użyj złącza CB1, CB3 lub CB9
Sworzeń boczny

CZ

Typ a značka (osobní/dodávkový)
Období výroby vozu
Přední okno
Zadní okno
Strana řidiče
Strana spolujezdce
Sada
Pro levostranné řízení
Pro pravostranné řízení
Protisměrné stěrače (tzv. motýl)
3dveřový/5dveřový
Plochá lišta z prvovýroby
Konvenční lišta
Hybridní stěrač
Stěrač se spoilerem
Zahnutý stěrač
Ploché stěrače
Jediný stěrač
Zabudovaná tryska ostřikovače
Sada náhradních pryží stěrače
Náhradní sada pro plastikové raménko
Náhradní sada - raménko stěrače
Raménko stěrače
Uchycení na hák
Použít sadu AK1
Použít konektor CB1, CB3 nebo CB9
Stranový upínací čep

HU

Típus és gyártmány (személygépkocsi/VAN)
A személygépkocsi gyártási időszaka
Első szélvédő
Hátsó szélvédő
Vezetőoldal
Utasoldal
Készlet
Balkormányos
Jobbkormányos
Egymással szembeni ablaktörlők (pillangó)
3 ajtós/5 ajtós
Gyári lapos ablaktörlő lapát
Hagyományos ablaktörlő lapát
Hibrid lapát
Spoileres lapát
Hajlított utasoldali lapát
Lapos ablaktörlő lapát (nem felújítható)
Egykaros ablaktörlő lapát
Beépített ablakmosó fúvóka
Felújító készlet
Felújító készlet műanyag karhoz
Felújító készlet - ablaktörlő kar
Ablaktörlő kar
Kampós csatlakozás
Használja az AK1 készletet.
Használja a CB1, CB3 vagy CB9 csatlakozót.
Oldalsó illesztő tüske

RO

Tip și marcă (autoturism/furgonetă)
Perioadă de fabricație autoturism
Parbriz
Lunetă
Partea șoferului
Partea pasagerului
Kit
Pentru vehiculele cu volan pe partea stângă
Pentru vehiculele cu volan pe partea dreaptă
Ștergătoare opuse (fluture)
3 uși / 5 uși
Ștergător plat OE
Ștergător plat convențional
Ștergător hibrid
Ștergător cu spoiler
Ștergător curbat pasager
Ștergătoare plate (carcasa nu poate fi refolosită)
Ștergător mono
Duză ștergător integrată
Kit înlocuire
Lamelă înlocuire pentru braț din plastic
Kit înlocuire - braț ștergător
Braț ștergător
Conexiune cu cârlig
Utilizați kitul AK1
Utilizați conectorul CB1, CB3 sau CB9
Știft lateral

BG

Вид и модел (автомобил/ван)
Производствен автомобил
Предно стъкло
Задно стъкло
Страна на шофьора
Страна на пътника
Комплект
За ляв волан
За десен волан
Противоположни чистачки (пеперуда)
3-врати / 5-врати
Плоска чистачка за оригинално вграждане
Конвенционална чистачка
Хибридна чистачка
чистачка със спойлер
извита чистачка от страната на пътника
Плоска чистачка (не може да се подменя перото)
Единична чистачка
Интегриран спрей за почистване
Комплект за подмяна
Подмяна с пласмасово рамо
Ремонтен комплект - перо за чистачка
перо
Свързване с кука
Използвайте комплект AK1
Използвайте конектор CB1, CB3 или CB9
със странично монтиране

RS

Tip i marka (automobil/kombi)
Period proizvodnje automobila
Prednji vetrobran
Zadnji vetrobran
Strana vozača
Strana suvozača
Komplet
Za upravljače na levoj strani
Za upravljače na desnoj strani
Nasuprot postavljeni brisači (leptir)
3 vrata/5 vrata
OE ravni brisači
Standardni brisači
Hibridni brisači
Brisači sa spojlerom
Zakrivljeni brisač na suvozačevoj strani
Ravni brisači (poklopac ne može da bude ponovo montiran)
Mono brisači
Integrisana brizgaljka
Komplet guma brisača
Guma brisača za plastični nosač brisača
Komplet guma brisača - nosač brisača
Nosač brisača
Kukasti konektor
Koristite komplet AK1
Koristite konektor CB1, CB3 ili CB9
Osovinica sa bočnom montažom

TK

Türü ve Markası (Araba/Kamyonet)
Araba Üretim Dönemi
Ön Cam
Arka Cam
Sürücü Tarafı
Yolcu Tarafı
Kit
Soldan Sürüş İçin
Sağdan Sürüş İçin
Çapraz silecekler (Kelebek)
3 kapılı / 5 kapılı
OE muz tipi silecek
Geleneksel Silecek
Hibrit Silecek
Spoyler Silecek
Kavisli Yolcu Tarafı Sileceği
Muz tipi silecek (üst kısım tekrar takılamaz)
Tek Silecek
Entegre Temizleme Spreyi
Değiştirme Kiti
Plastik kol için değiştirme
Silecek kolu için değiştirme kiti
Silecek Kolu
Kanca bağlantısı
AK1 Setini Kullanın
CB1, CB3 veya CB9 konektörünü kullanın
Yandan takmalı pin

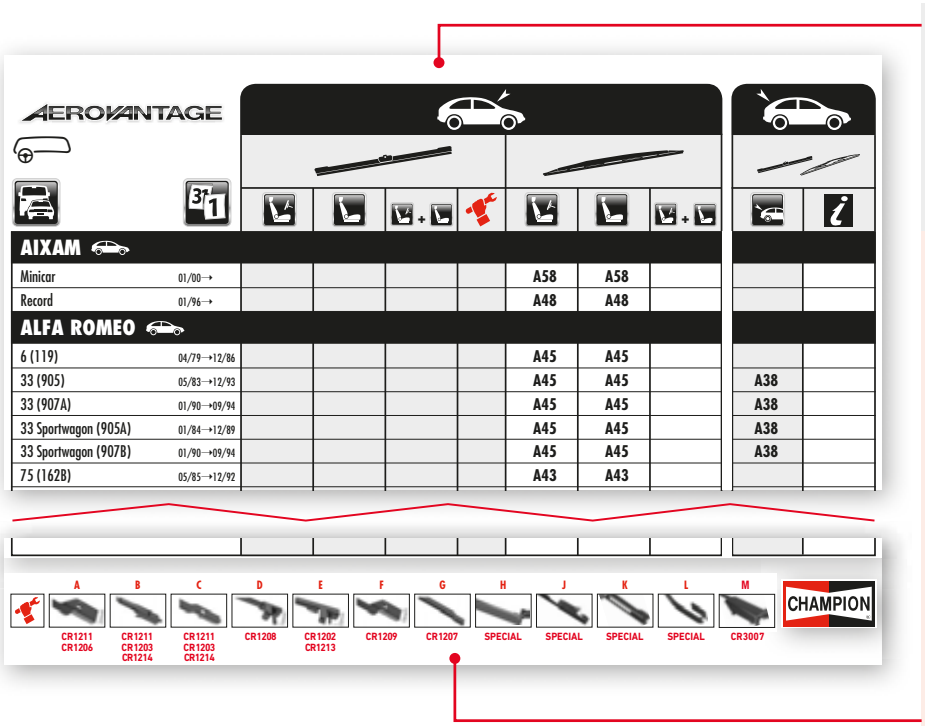

Split rear door
Hatchback
Tailgate
EU production
JAPAN Production
Optional

EN

Split rear door
Hatchback
Tailgate
EU production
JAPAN production
Optional

Installation instructions
Bayonet (22mm) connection
Top Lock connection
Top Lock (BMW) connection
Side Pin (19mm) connection
Side Pin (22mm) connection
Bayonet (19mm) connection
Flat Bayonet connection
Top Pin connection
Top Claw connection
Top Lock V connection
Hook connection
Top Lock 2 connection

Split rear door
Hatchback
Tailgate
EU production
JAPAN Production
Optional

FR

Lunette arrière ouvrante
Hayon
Hayon avec seuil de chargement
Fabrication UE
Production japonnaise
Optionnel

Instruction d'installation
Connexion baïonnette (22 mm)
Connecteur Top lock
Connecteur Top lock (BMW)
Connecteur Side Pin (19 mm)
Connecteur Side Pin (22 mm)
Connexion baïonnette (19 mm)
Connecteur plat à baïonnette
Connecteur Top Pin
Connecteur Top Claw
Connecteur Top Lock V
Connecteur à crochet
Connecteur Top lock 2

DE

Geteilte Hecktüre
Schrägheck
Heckklappe
EU-Produktion
Japan-Produktion
Wahlweise

Montage-Hinweise
Bajonett-Anschluss (22 mm)
Top Lock-Anschluss
Top Lock (BMW)-Anschluss
Stiftanschluss (19 mm)
Stiftanschluss (22 mm)
Bajonett-Anschluss (19 mm)
Flachbajonett-Anschluss
Top-Pin Anschluss
Top-Claw Anschluss
Top Lock V-Anschluss
Haken-Aschluss
Top Lock-Anschluss 2

IT

Portellone posteriore diviso in due
Portellone posteriore
Baule
Produzione EU
Produzione giapponese
Optional

Istruzioni di montaggio
Connessione a baionetta (22 mm)
Connessione Top Lock
Connessione Top Lock (BMW)
Connessione ad innesto (19 mm)
Connessione ad innesto (22 mm)
Connessione a baionetta (19 mm)
Connessione a baionetta spazzola piatta
Connessione Top Pin
Connessione Top Claw
Connessione Top Lock V
Connessione ad uncino
Connessione Top Lock 2

ES

Luneta trasera partida
Portón trasero
Maletero
Fabricado en EU
Producción Japonesa
Opcional

Instrucciones de montaje
Conector de bayoneta (22mm)
Conector Top Lock
Conector Top lock (BMW)
Conector Pin lateral (19mm)
Conector Pin lateral (22mm)
Conexión bayoneta (19mm)
Conector plano a bayoneta
Conector Pin superior
Conector de gancho superior
Conector Top Lock V
Conector a gancho
Conector Top Lock 2

RU

Раздельная задняя дверь
Хэтчбек
Задняя дверь
Производство ЕС
Производство ЯПОНИЯ
Вспомогательно

Инструкции по установке
Байонетный разъем (22 мм)
Разъем с верхним фиксатором
Разъем с верхним фиксатором (BMW)
Разъем с боковым штифтом (19 мм)
Разъем с боковым штифтом (22 мм)
Байонетный разъем (19 мм)
Плоский байонетный разъем
Разъем со штифтом верхнего крепления
Разъем с зубчатым фиксатором верхнего крепления
Разъем с V-образным фиксатором верхнего крепления
Разъем под крючок
Разъем с верхним фиксатором 2

PL

Tylne drzwi dwuskrzydłowe
Hatchback
Klapa tylna
Produkcja UE
Produkcja Japonia
Opcja

Instrukcje montażu
Złącze bagnetowe (22mm)
Złącze z górnym zatrzaskiem
Złącze z górnym zatrzaskiem (BMW)
Złącze ze sworzniem bocznym (19mm)
Złącze ze sworzniem bocznym (22mm)
Złącze bagnetowe (19mm)
Złącze bagnetowe płaskie
Złącze ze sworzniem górnym
Złącze z zatrzaskiem górnym
Złącze z zatrzaskiem górnym typu V
Złącze haczykowe
Złącze z górnym zatrzaskiem 2

CZ

Dělené zadní dveře
Hatchback
Výklopná záď
Výroba EU
Japonská výroba
Volitelný

Instalační pokyny
Bajonetové připojení (22mm)
Adaptér Top Lock
Adaptér Top Lock (BMW)
Uchycení postranním čepem (19 mm)
Uchycení postranním čepem (22 mm)
Bajonetové připojení (19mm)
Uchycení plochým bajonetem
Horní úchyt
Adaptér s zobáčkem
Adaptér Top Lock V
Hákové připojení
Adaptér Top Lock 2

HU

Osztott hátsó ajtó
Hatchback
Lehajtható hátsó fal
EU gyártmány
Japán gyártmány
Opciós

Szerelési utasítás
Bajonettcsatlakozás (22 mm)
Felsőzáras csatlakozás
Felsőzáras csatlakozás (BMW)
Oldaltüskés (19 mm) csatlakozás
Oldaltüskés (22 mm) csatlakozás
Bajonettcsatlakozás (19 mm)
Lapos bajonettcsatlakozás
Felsőtüskés csatlakozó
Felső körmös csatlakozó
Felsőzáras V csatlakozó
Horog csatlakozó
Felsőzáras csatlakozás 2

RO

Ușă spate dublă
Hatchback
Ușă spate
Producție UE
Producție Japonia
Opțional

Instrucțiuni montaj
Conexiune baionetă (22 mm)
Conexiune cu blocare superioară
Conexiune cu blocare superioară (BMW)
Conexiune cu știft lateral (19 mm)
Conexiune cu știft lateral (22 mm)
Conexiune baionetă (19 mm)
Conexiune baionetă plată
Conexiune cu știft superior
Conexiune cu gheară
Conexiune cu blocare superioară V
Conexiune cârlig
Conexiune cu blocare superioară 2

BG

Задна врата с две крила
Хечбек
Врата на багажник
Произведено в ЕС
Произведено в Япония
Опция

Инструкции за монтаж
Bayonet (22 мм) свързване
Свързване с горно заключване
Свързване с горно заключване (BMW)
Свързване със страничен щифт (19 мм)
Свързване със страничен щифт (22 мм)
Bayonet (19 мм) свързване
Плоско Bayonet свързване
с горно монтиране
с горно захващане
с горно заключване
Свързване с кука
Свързване с горно заключване 2

RS

Podeljena zadnja vrata
Hatchback
Zadnja vrata na podizanje
Proizvedeno u EU
Proizvodnja u Japanu
Opcioni

Instrukcije za instalaciju
Bajonet (22 mm) konektor
Konektor sa zaključavanjem sa gornje strane
Konektor sa zaključavanjem sa gornje strane (BMW)
Konektor sa bočnom osovinicom (19 mm)
Konektor sa bočnom osovinicom (22 mm)
Bajonet (19 mm) konektor
Ravni bajonet konektor
Konektor sa osovinicom sa gornje strane
Konektor sa gornjom čeljusti
Konektor sa V zaključavanjem sa gornje strane
Kukasti konektor
Konektor sa zaključavanjem sa gornje strane 2

TK

Arka kapı
Hatchback
Bagaj kapısı
EU üretimi
JAPONYA Üretimi
Opsiyonel

Montaj talimatları
Bayonet (22 mm) bağlantısı
Tepe Kilit bağlantısı
Tepe Kilit (BMW) bağlantısı
Yan Pim (19 mm) bağlantısı
Yan Pim (22 mm) bağlantısı
Bayonet (19 mm) bağlantısı
Düz Bayonet bağlantısı
Üst Pim bağlantısı
Üst Pençe bağlantısı
Üst V Kilit Bağlantısı
Kanca Bağlantısı
Tepe Kilit bağlantısı 2

AEROVANTAGE x1

Part No	Stock Code	Description	Type	Quantity Unit	Length (mm)	Length (in)	Adaptor Enclosed	Barcode
A29	A29/B01	Wiper Blade	Conventional	1	290	11	E3, B	4044197672936
A30	A30/B01	Wiper Blade	Conventional	1	290	11	SR4516	4044197907199
A33	A33/B01	Wiper Blade	Conventional	1	330	13	E3, B	4044197672943
A36	A36/B01	Wiper Blade	Conventional	1	350	14	E3, B	4044197672950
A38	A38/B01	Wiper Blade	Conventional	1	380	15	CR5078, CH19, CD1	4044197672967
A41	A41/B01	Wiper Blade	Conventional	1	400	16	CR5078, CH19, CH31	4044197672974
A43	A43/B01	Wiper Blade	Conventional	1	430	17	CR5078, CH19, CH31	4044197672981
A45	A45/B01	Wiper Blade	Conventional	1	450	18	CR5078, CH19, CH31	4044197672998
A48	A48/B01	Wiper Blade	Conventional	1	480	19	CR5078, CH19, CH31	4044197673001
A51	A51/B01	Wiper Blade	Conventional	1	500	20	CR5078, CH19, CH31	4044197673018
A53	A53/B01	Wiper Blade	Conventional	1	530	21	CR5078, CH19	4044197673025
A55	A55/B01	Wiper Blade	Conventional	1	550	22	CR5078, CH24	4044197673032
A58	A58/B01	Wiper Blade	Conventional	1	580	23	CH22, CH31, CH24	4044197673049
A60	A60/B01	Wiper Blade	Conventional	1	600	24	CR5078, CH31, CH24	4044197673056
A61	A61/B01	Wiper Blade	Conventional	1	600	24	CH15 + BD5 (PA4152)	4044197675524
A65	A65/B01	Wiper Blade	Conventional	1	650	26	CR5078, CH24	4044197673063
A70	A70/B01	Wiper Blade	Conventional	1	700	28	CR5078, CH24	4044197673070
T65H01	T65H01/C01	Wiper Blade	Conventional	1	650	26	CH34 + CS16	4044197468324
T65H01	T65H01/P01	Wiper Blade	Conventional	1	650	26	CH34 + CS16	4044197252497
T70H01	T70H01/C01	Wiper Blade	Conventional	1	700	28	CH34 + CS16	4044197468362
T70H01	T70H01/P01	Wiper Blade	Conventional	1	700	28	CH34 + CS16	4044197252466
AFL35	AFL35/B01	Wiper Blade	Flat	1	350	14	CR1211, CR1207	4044197673544
AFL38	AFL38/B01	Wiper Blade	Flat	1	380	15	CR1211	4044197673551
AFL40	AFL40/B01	Wiper Blade	Flat	1	400	16	CR1211, CR1202, CR1207, CR1209	4044197673568
AFL43	AFL43/B01	Wiper Blade	Flat	1	430	17	CR1211, CR1202, CR1208	4044197673575
AFL45	AFL45/B01	Wiper Blade	Flat	1	450	18	CR1211, CR1202, CR1207, CR1208, CR1209	4044197673582
AFL48	AFL48/B01	Wiper Blade	Flat	1	480	19	CR1211, CR1202, CR1207, CR1209	4044197673599
AFL48A	AFL48A/B01	Wiper Blade	Flat	1	480	19	CR1202	4044197673605
AFL50	AFL50/B01	Wiper Blade	Flat	1	500	20	CR1211, CR1202, CR1209	4044197673612
AFL53	AFL53/B01	Wiper Blade	Flat	1	530	21	CR1211, CR1202, CR1207, CR1209	4044197673629
AFL53A	AFL53A/B01	Wiper Blade	Flat	1	530	21	CR1202	4044197673636
AFL55	AFL55/B01	Wiper Blade	Flat	1	550	22	CR1211, CR1202, CR1207	4044197673643
AFL58	AFL58/B01	Wiper Blade	Flat	1	580	23	CR1211, CR1202, CR1207, CR1209	4044197673667
AFL60	AFL60/B01	Wiper Blade	Flat	1	600	24	CR1211, CR1202, CR1207, CR1208, CR1209	4044197673674
AFL63	AFL63/B01	Wiper Blade	Flat	1	630	25	CR1211	4044197673681
AFL65	AFL65/B01	Wiper Blade	Flat	1	650	26	CR1211, CR1202, CR1207, CR1208, CR1209	4044197673698
AFL68	AFL68/B01	Wiper Blade	Flat	1	680	27	CR1211, CR1202, CR1209	4044197673704
AFL70	AFL70/B01	Wiper Blade	Flat	1	700	28	CR1211, CR1202, CR1209	4044197673711
AFL75	AFL75/B01	Wiper Blade	Flat	1	750	30	CR1211, CR1202, CR1207	4044197673728
AFL80	AFL80/B01	Wiper Blade	Flat	1	800	32	CR1211, CR1202, CR1207	4044197673735
AFR40	AFR40/B01	Wiper Blade	Flat	1	400	16	CR1211, CR1202, CR1207, CR1209	4044197673766
AFR45	AFR45/B01	Wiper Blade	Flat	1	450	18	CR1211, CR1202, CR1207, CR1208, CR1209	4044197673780
AFR48	AFR48/B01	Wiper Blade	Flat	1	480	19	CR1211, CR1202, CR1207, CR1209	4044197673797
AFR50	AFR50/B01	Wiper Blade	Flat	1	500	20	CR1211, CR1202, CR1209	4044197673810
AFR53	AFR53/B01	Wiper Blade	Flat	1	530	21	CR1211, CR1202, CR1207, CR1209	4044197673827
AFR55	AFR55/B01	Wiper Blade	Flat	1	550	22	CR1211, CR1202, CR1207	4044197673841
AFR58	AFR58/B01	Wiper Blade	Flat	1	580	23	CR1211, CR1202, CR1207, CR1209	4044197673865
AFR60	AFR60/B01	Wiper Blade	Flat	1	600	24	CR1211, CR1202, CR1207, CR1208, CR1209	4044197673872

	AFR63	AFR63/B01	Wiper Blade	Flat	1	630	25	CR1211	4044197673889
	AFR65	AFR65/B01	Wiper Blade	Flat	1	650	26	CR1211, CR1202, CR1207, CR1208, CR1209	4044197673896
	AFR70	AFR70/B01	Wiper Blade	Flat	1	700	28	CR1211, CR1202, CR1209	4044197673919
	AFR75	AFR75/B01	Wiper Blade	Flat	1	750	30	CR1211, CR1202, CR1207	4044197673926
	AHL35	AHL35/B01	Wiper Blade	Hybrid	1	350	14	9x3/9x4	4044197675555
	AHL40	AHL40/B01	Wiper Blade	Hybrid	1	400	16	9x3/9x4	4044197675562
	AHL45	AHL45/B01	Wiper Blade	Hybrid	1	450	18	9x3/9x4	4044197675579
	AHL48	AHL48/B01	Wiper Blade	Hybrid	1	480	19	9x3/9x4	4044197675586
	AHL50	AHL50/B01	Wiper Blade	Hybrid	1	500	20	9x3/9x4	4044197675593
	AHL55	AHL55/B01	Wiper Blade	Hybrid	1	550	22	9x3/9x4	4044197675609
	AHL60	AHL60/B01	Wiper Blade	Hybrid	1	600	24	9x3/9x4	4044197675616
	AHL65	AHL65/B01	Wiper Blade	Hybrid	1	650	26	9x3/9x4	4044197675623
	AS45	AS45/B01	Wiper Blade	with spoiler	1	450	18	CR5078, CH19	4044197673148
	AS48	AS48/B01	Wiper Blade	with spoiler	1	480	19	CR5078, CH19	4044197673155
	AS51	AS51/B01	Wiper Blade	with spoiler	1	500	20	CR5078, CH19	4044197673162
	AS53	AS53/B01	Wiper Blade	with spoiler	1	530	21	CR5078, CH19	4044197673179
	AS55	AS55/B01	Wiper Blade	with spoiler	1	550	22	CR5078	4044197673186
	AS60	AS60/B01	Wiper Blade	with spoiler	1	600	24	CR5078, CH24, CH18	4044197673193
	AS65	AS65/B01	Wiper Blade	with spoiler	1	650	26	CR5078	4044197673209
	AS70	AS70/B01	Wiper Blade	with spoiler	1	700	28	CH25	4044197673216
	AW45	AW45/B01	Wiper Blade	with integrated washer-fluid jet	1	450	18	CR5078, CH24	4044197673094
	AW55	AW55/B01	Wiper Blade	with integrated washer-fluid jet	1	550	22	CR5078	4044197673117
	AW60	AW60/B01	Wiper Blade	with integrated washer-fluid jet	1	600	24	CR5078, CH24	4044197673124
	AW65	AW65/B01	Wiper Blade	with integrated washer-fluid jet	1	650	26	CR5078	4044197673131
	AP23	AP23/B01	Wiper Blade (rear)		1	230	9		4044197672783
	AP25B	AP25B/B01	Wiper Blade (rear)		1	250	10		4044197850792
	AP26	AP26/B01	Wiper Blade (rear)			260	10		4044197770847
	AP28	AP28/B01	Wiper Blade (rear)		1	280	11		4044197672790
	AP28A	AP28A/B01	Wiper Blade (rear)		1	280	11		4044197850808
	AP29	AP29/B01	Wiper Blade (rear)		1	290	11		4044197672806
	AP30	AP30/B01	Wiper Blade (rear)		1	300	12		4044197672813
	AP30A	AP30A/B01	Wiper Blade (rear)		1	300	12		4044197672820
	AP30B	AP30B/B01	Wiper Blade (rear)		1	300	12		4044197672837
NEW	AP30C	AP30C/B01	Wiper Blade (rear)		1	300	12		4060426204600
	AP30V	AP30V/B01	Wiper Blade (rear)		1	300	12		4044197850815
	AP31	AP31/B01	Wiper Blade (rear)		1	300	12		4044197672844
	AP34	AP34/B01	Wiper Blade (rear)		1	350	14		4044197672851
	AP35	AP35/B01	Wiper Blade (rear)		1	350	14		4044197672868
	AP35A	AP35A/B01	Wiper Blade (rear)		1	350	14		4044197672875
	AP35B	AP35B/B01	Wiper Blade (rear)		1	350	14		4044197672882
NEW	AP35C	AP35C/B01	Wiper Blade (rear)		1	350	14		4060426204617
	AP37	AP37/B01	Wiper Blade (rear)		1	380	15		4044197672899
	AP37C	AP37C/B01	Wiper Blade (rear)		1	370	15		4044197907182
	AP38	AP38/B01	Wiper Blade (rear)		1	400	16		4044197672905
	AP40	AP40/B01	Wiper Blade (rear)		1	400	16		4044197672912
	AP40A	AP40A/B01	Wiper Blade (rear)		1	400	16		4044197850822
NEW	AP40D	AP40D/B01	Wiper Blade (rear)		1	400	16		4060426240486
	AF25	AF25/B01	Wiper Blade (rear)	Flat	1	250	10	SR2000	4044197673940
	AF27	AF27/B01	Wiper Blade (rear)	Flat	1	280	11	SR2000	4044197673957
	AF28	AF28/B01	Wiper Blade (rear)	Flat	1	280	11	SR2000	4044197673964
	AF28X	AF28X/B01	Wiper Blade (rear)	Flat	1	280	11	75683	4044197907090
	AF28Z	AF28Z/B01	Wiper Blade (rear)	Flat	1	280	11	75681	4044197907106

AF30Z	AF30Z/B01	Wiper Blade (rear)	Flat	1	300	12	75681	4044197907113
AF33X	AF33X/B01	Wiper Blade (rear)	Flat	1	330	13	75683	4044197907120
AF34	AF34/B01	Wiper Blade (rear)	Flat	1	350	14	SR2000	4044197673971
AF34Y	AF34Y/B01	Wiper Blade (rear)	Flat	1	340	13		4044197907151
AF37Y	AF37Y/B01	Wiper Blade (rear)	Flat	1	370	15		4044197907168
AF38X	AF38X/B01	Wiper Blade (rear)	Flat	1	380	15	75683	4044197907137
AF38Z	AF38Z/B01	Wiper Blade (rear)	Flat	1	380	15	75681	4044197907144
AF39Y	AF39Y/B01	Wiper Blade (rear)	Flat	1	390	15		4044197907175
AF40	AF40/B01	Wiper Blade (rear)	Flat	1	400	16	SR2000	4044197673988
A290R	A290R/113	Wiping Arm (rear)		1	290	11		5010874081505
A321R	A321R/113	Wiping Arm (rear)		1	330	13		5010874081512
A323R	A323R/113	Wiping Arm (rear)		1	330	13		5010874081536
A332R	A332R/113	Wiping Arm (rear)		1	330	13		5010874081567
A335R	A335R/113	Wiping Arm (rear)		1	330	13		5010874081598
A338R	A338R/113	Wiping Arm (rear)		1	330	13		4044197141616
A339R	A339R/113	Wiping Arm (rear)		1	330	13		5010874081628
A350R	A350R/113	Wiping Arm (rear)		1	350	14		5010874081635
A351R	A351R/113	Wiping Arm (rear)		1	350	14		5010874081642
A352R	A352R/113	Wiping Arm (rear)		1	350	14		5010874081659
A353R	A353R/113	Wiping Arm (rear)		1	350	14		5010874081666
A354R	A354R/113	Wiping Arm (rear)		1	350	14		5010874081673
A380R	A380R/113	Wiping Arm (rear)		1	380	15		5010874081680
A382R	A382R/113	Wiping Arm (rear)		1	380	15		4044197141586
A410R	A410R/113	Wiping Arm (rear)		1	400	16		5010874081727
A411R	A411R/113	Wiping Arm (rear)		1	400	16		5010874081734
A480D	A480D/113	Wiping Arm (rear)		1	480	18		4044197675517

PREMIUM PERFORMANCE

AEROVANTAGE

x 2

Part No	Stock Code	Description	Type	Quantity Unit	Length 1/ Length 2 (mm)	Length 1 / Length 2 (inch)	Adaptor Enclosed	Barcode
A5050	A5050/B02	Wiper Blade (set)		Set (2 wipers)	500/500	20/20		4044197673254
A5840	A5840/B02	Wiper Blade (set)		Set (2 wipers)	580/400	23/16	CH31	4044197770830
A5841	A5841/B02	Wiper Blade (set)		Set (2 wipers)	580/400	23/16	CH22	4044197673292
A6051	A6051/B02	Wiper Blade (set)		Set (2 wipers)	600/500	24/20	CH24	4044197673308
A6555	A6555/B02	Wiper Blade (set)		Set (2 wipers)	650/550	26/22		4044197675807
A6565	A6565/B02	Wiper Blade (set)		Set (2 wipers)	650/650	26/26		4044197675531
A7065	A7065/B02	Wiper Blade (set)		Set (2 wipers)	700/650	28/26	CH25	4044197673322
AS4545	AS4545/B02	Wiper Blade (set)	with spoiler	Set (2 wipers)	450/450	18/18	CR5078	4044197673353
AS4548	AS4548/B02	Wiper Blade (set)	with spoiler	Set (2 wipers)	450/480	18/19	CR5078	4044197673360
AS4848	AS4848/B02	Wiper Blade (set)	with spoiler	Set (2 wipers)	480/480	19/19	CR5078	4044197673377
AS5145	AS5145/B02	Wiper Blade (set)	with spoiler	Set (2 wipers)	500/450	20/18	CR5078	4044197673384
AS5148	AS5148/B02	Wiper Blade (set)	with spoiler	Set (2 wipers)	500/480	20/19	CR5078	4044197673391
AS5345	AS5345/B02	Wiper Blade (set)	with spoiler	Set (2 wipers)	530/450	21/18	CR5078	4044197673407
AS5348	AS5348/B02	Wiper Blade (set)	with spoiler	Set (2 wipers)	530/480	21/19	CR5078	4044197673414
AS5541	AS5541/B02	Wiper Blade (set)	with spoiler	Set (2 wipers)	550/400	22/16	CR5078	4044197673421
AS5545	AS5545/B02	Wiper Blade (set)	with spoiler	Set (2 wipers)	550/450	22/18	CR5078	4044197673438
AS5548	AS5548/B02	Wiper Blade (set)	with spoiler	Set (2 wipers)	550/480	22/19	CR5078	4044197673445

	AS5551	AS5551/B02	Wiper Blade (set)	with spoiler	Set (2 wipers)	550/500	22/20	CR5078	4044197673452
	AS5555	AS5555/B02	Wiper Blade (set)	with spoiler	Set (2 wipers)	550/550	22/22	CR5078	4044197673469
	AS6048	AS6048/B02	Wiper Blade (set)	with spoiler	Set (2 wipers)	600/480	24/19	CR5078	4044197673476
	AS6060	AS6060/B02	Wiper Blade (set)	with spoiler	Set (2 wipers)	600/600	24/24	CR5078, CH18	4044197673483
	AS6541	AS6541/B02	Wiper Blade (set)	with spoiler	Set (2 wipers)	650/400	26/16	CR5078	4044197675715
	ASC5348	ASC5348/B02	Wiper Blade (set)	Curved with spoiler	Set (2 wipers)	530/480	21/19	CH28	4044197673490
	ASC5353	ASC5353/B02	Wiper Blade (set)	Curved with spoiler	Set (2 wipers)	530/530	21/21	CH28	4044197673506
	ASC5553	ASC5553/B02	Wiper Blade (set)	Curved with spoiler	Set (2 wipers)	550/530	22/21	CH28	4044197673513
	ASC6055	ASC6055/B02	Wiper Blade (set)	Curved with spoiler	Set (2 wipers)	600/550	24/22	CH28	4044197673520
	ASW7065	ASW7065/B02	Wiper Blade (set)	with integrated washer-fluid jet	Set (2 wipers)	700/650	28/26	CH25	4044197673537
	AW6060	AW6060/B02	Wiper Blade (set)	with integrated washer-fluid jet	Set (2 wipers)	600/600	24/24	CR5078	4044197673339
	AW6555	AW6555/B02	Wiper Blade (set)	with integrated washer-fluid jet	Set (2 wipers)	650/550	26/22	CR5078	4044197673346
	AFL4850B	AFL4850B/C02	Wiper Blade (set)	Flat	Set (2 wipers)	480/500	19/20	CR1203 or CR1214	4044197673995
	AFL5035G	AFL5035G/C02	Wiper Blade (set)	Flat	Set (2 wipers)	500/350	20/14	CR1207	4044197843732
	AFL5050B	AFL5050B/C02	Wiper Blade (set)	Flat	Set (2 wipers)	500/500	20/20	CR1203 or CR1214	4044197674008
	AFL5050L	AFL5050L/C02	Wiper Blade (set)	Flat	Set (2 wipers)	500/500	20/20		4044197858804
	AFL5345L	AFL5345L/C02	Wiper Blade (set)	Flat	Set (2 wipers)	530/450	21/18		4044197858811
	AFL5348A	AFL5348A/C02	Wiper Blade (set)	Flat	Set (2 wipers)	530/480	21/19	CR1206	4044197674015
	AFL5348L	AFL5348L/C02	Wiper Blade (set)	Flat	Set (2 wipers)	530/480	21/19		4044197858828
	AFL5350L	AFL5350L/C02	Wiper Blade (set)	Flat	Set (2 wipers)	530/500	21/20		4044197858835
	AFL5353A	AFL5353A/C02	Wiper Blade (set)	Flat	Set (2 wipers)	530/530	21/21	CR1206	4044197674022
	AFL5353F	AFL5353F/C02	Wiper Blade (set)	Flat	Set (2 wipers)	530/530	21/21	CR1209, CR1202	4044197843749
	AFL5353L	AFL5353L/C02	Wiper Blade (set)	Flat	Set (2 wipers)	530/530	21/21		4044197858842
	AFL5535L	AFL5535L/C02	Wiper Blade (set)	Flat	Set (2 wipers)	550/350	22/14		4044197858859
	AFL5540L	AFL5540L/C02	Wiper Blade (set)	Flat	Set (2 wipers)	550/400	22/16		4044197858863
NEW	AFL5540M	AFL5540M/C02	Wiper Blade (set)	Flat	Set (2 wipers)	550/400	22/16	CR3007	4060426187927
	AFL5545B	AFL5545B/C02	Wiper Blade (set)	Flat	Set (2 wipers)	550/450	22/18	CR1203 or CR1214	4044197674039
	AFL5545E	AFL5545E/C02	Wiper Blade (set)	Flat	Set (2 wipers)	550/450	22/18	CR1213, CR1202	4044197674046
NEW	AFL5548G	AFL5548G/C02	Wiper Blade (set)	Flat	Set (2 wipers)	550/480	22/19	CR1207, CR1203 or CR1214	4060426158385
	AFL5548L	AFL5548L/C02	Wiper Blade (set)	Flat	Set (2 wipers)	550/480	22/19		4044197858873
NEW	AFL5550A	AFL5550A/C02	Wiper Blade (set)	Flat	Set (2 wipers)	550/500	22/20	CR1206, CR1214, CR1209	4060426158354
	AFL5550L	AFL5550L/C02	Wiper Blade (set)	Flat	Set (2 wipers)	550/500	22/20		4044197858880
	AFL5553B	AFL5553B/C02	Wiper Blade (set)	Flat	Set (2 wipers)	550/530	22/21	CR1203 or CR1214	4044197674053
	AFL5555B	AFL5555B/C02	Wiper Blade (set)	Flat	Set (2 wipers)	550/550	22/22	CR1203 or CR1214	4044197843756
	AFL5555J	AFL5555J/C02	Wiper Blade (set)	Flat	Set (2 wipers)	550/550	22/22		4044197674060
	AFL5555K	AFL5555K/C02	Wiper Blade (set)	Flat	Set (2 wipers)	550/550	22/22		4044197674077
	AFL5845E	AFL5845E/C02	Wiper Blade (set)	Flat	Set (2 wipers)	580/450	23/18	CR1213, CR1206, CR1202	4044197674084
	AFL5853G	AFL5853G/C02	Wiper Blade (set)	Flat	Set (2 wipers)	580/530	23/21	CR1207	4044197674091
NEW	AFL5853M	AFL5853M/C02	Wiper Blade (set)	Flat	Set (2 wipers)	580/530	23/21	CR3007	4060426187965
	AFL6035A	AFL6035A/C02	Wiper Blade (set)	Flat	Set (2 wipers)	600/350	24/14	CR1206	4044197674107
	AFL6035L	AFL6035L/C02	Wiper Blade (set)	Flat	Set (2 wipers)	600/350	24/14		4044197858894
	AFL6038A	AFL6038A/C02	Wiper Blade (set)	Flat	Set (2 wipers)	600/380	24/15	CR1206, CR1203 or CR1214	4044197674114
	AFL6040A	AFL6040A/C02	Wiper Blade (set)	Flat	Set (2 wipers)	600/400	24/16	CR1206	4044197674121
	AFL6040E	AFL6040E/C02	Wiper Blade (set)	Flat	Set (2 wipers)	600/400	24/16	CR1202, CR1203 or CR1214	4044197674138
	AFL6040F	AFL6040F/C02	Wiper Blade (set)	Flat	Set (2 wipers)	600/400	24/16	CR1209	4044197674145
	AFL6040G	AFL6040G/C02	Wiper Blade (set)	Flat	Set (2 wipers)	600/400	24/16	CR1207	4044197674152
	AFL6040L	AFL6040L/C02	Wiper Blade (set)	Flat	Set (2 wipers)	600/400	24/16		4044197858903
	AFL6045A	AFL6045A/C02	Wiper Blade (set)	Flat	Set (2 wipers)	600/450	24/18	CR1206, CR1202	4044197674169
	AFL6045B	AFL6045B/C02	Wiper Blade (set)	Flat	Set (2 wipers)	600/450	24/18	CR1203 or CR1214, CR1209	4044197843763

	AFL6045G	AFL6045G/C02	Wiper Blade (set)	Flat	Set (2 wipers)	600/450	24/18	CR1207	4044197674176
	AFL6045L	AFL6045L/C02	Wiper Blade (set)	Flat	Set (2 wipers)	600/450	24/18		4044197858910
NEW	AFL6045M	AFL6045M/C02	Wiper Blade (set)	Flat	Set (2 wipers)	600/450	24/18	CR3007	4060426187941
	AFL6048A	AFL6048A/C02	Wiper Blade (set)	Flat	Set (2 wipers)	600/480	24/19	CR1206	4044197674183
	AFL6048B	AFL6048B/C02	Wiper Blade (set)	Flat	Set (2 wipers)	600/480	24/19	CR1203 or CR1214	4044197674190
	AFL6048E	AFL6048E/C02	Wiper Blade (set)	Flat	Set (2 wipers)	600/480	24/19	CR1213, CR1202	4044197674206
	AFL6048F	AFL6048F/C02	Wiper Blade (set)	Flat	Set (2 wipers)	600/480	24/19	CR1209	4044197674213
	AFL6048L	AFL6048L/C02	Wiper Blade (set)	Flat	Set (2 wipers)	600/480	24/19		4044197858927
	AFL6050F	AFL6050F/C02	Wiper Blade (set)	Flat	Set (2 wipers)	600/500	24/20	CR1209, CR1206	4044197674220
	AFL6050L	AFL6050L/C02	Wiper Blade (set)	Flat	Set (2 wipers)	600/500	24/20		4044197858934
NEW	AFL6050M	AFL6050M/C02	Wiper Blade (set)	Flat	Set (2 wipers)	600/500	24/20	CR3007	4060426240523
	AFL6053A	AFL6053A/C02	Wiper Blade (set)	Flat	Set (2 wipers)	600/530	24/21	CR1206	4044197674237
	AFL6053L	AFL6053L/C02	Wiper Blade (set)	Flat	Set (2 wipers)	600/530	24/21		4044197858941
	AFL6055B	AFL6055B/C02	Wiper Blade (set)	Flat	Set (2 wipers)	600/550	24/22	CR1203 or CR1214	4044197674244
	AFL6060A	AFL6060A/C02	Wiper Blade (set)	Flat	Set (2 wipers)	600/600	24/24	CR1206, CR1202, CR1208	4044197843770
	AFL6060E	AFL6060E/C02	Wiper Blade (set)	Flat	Set (2 wipers)	600/600	24/24	CR1213, CR1208, CR1202	4044197674251
	AFL6535A	AFL6535A/C02	Wiper Blade (set)	Flat	Set (2 wipers)	650/350	26/14	CR1206	4044197843787
	AFL6535G	AFL6535G/C02	Wiper Blade (set)	Flat	Set (2 wipers)	650/350	26/14	CR1207	4044197843794
	AFL6535L	AFL6535L/C02	Wiper Blade (set)	Flat	Set (2 wipers)	650/350	26/14		4044197858958
NEW	AFL6535M	AFL6535M/C02	Wiper Blade (set)	Flat	Set (2 wipers)	650/350	26/14	CR3007, CR1207	4060426187903
	AFL6538A	AFL6538A/C02	Wiper Blade (set)	Flat	Set (2 wipers)	650/380	26/15	CR1206	4044197674268
	AFL6538B	AFL6538B/C02	Wiper Blade (set)	Flat	Set (2 wipers)	650/380	26/15	CR1203 or CR1214	4044197674275
	AFL6540A	AFL6540A/C02	Wiper Blade (set)	Flat	Set (2 wipers)	650/400	26/16	CR1206	4044197674282
	AFL6540B	AFL6540B/C02	Wiper Blade (set)	Flat	Set (2 wipers)	650/400	26/16	CR1203 or CR1214	4044197674299
	AFL6540F	AFL6540F/C02	Wiper Blade (set)	Flat	Set (2 wipers)	650/400	26/16	CR1209	4044197843800
	AFL6540G	AFL6540G/C02	Wiper Blade (set)	Flat	Set (2 wipers)	650/400	26/16	CR1207	4044197674305
	AFL6540L	AFL6540L/C02	Wiper Blade (set)	Flat	Set (2 wipers)	650/400	26/16		4044197858965
NEW	AFL6540M	AFL6540M/C02	Wiper Blade (set)	Flat	Set (2 wipers)	650/400	26/18	CR3007	4060426240516
	AFL6543E	AFL6543E/C02	Wiper Blade (set)	Flat	Set (2 wipers)	650/430	26/17	CR1213, CR1202	4044197674312
	AFL6545D	AFL6545D/C02	Wiper Blade (set)	Flat	Set (2 wipers)	650/450	26/18	CR1208	4044197674329
	AFL6545F	AFL6545F/C02	Wiper Blade (set)	Flat	Set (2 wipers)	650/450	26/18	CR1209	4044197674336
	AFL6545L	AFL6545L/C02	Wiper Blade (set)	Flat	Set (2 wipers)	650/450	26/18		4044197858972
	AFL6548A	AFL6548A/C02	Wiper Blade (set)	Flat	Set (2 wipers)	650/480	26/19	CR1206	4044197674343
	AFL6548B	AFL6548B/C02	Wiper Blade (set)	Flat	Set (2 wipers)	650/480	26/19	CR1203 or CR1214	4044197843817
	AFL6548E	AFL6548E/C02	Wiper Blade (set)	Flat	Set (2 wipers)	650/480	26/19	CR1213, CR1202	4044197674350
	AFL6548F	AFL6548F/C02	Wiper Blade (set)	Flat	Set (2 wipers)	650/480	26/19	CR1209, CR1206	4044197858767
	AFL6548G	AFL6548G/C02	Wiper Blade (set)	Flat	Set (2 wipers)	650/480	26/19	CR1207	4044197674367
	AFL6550A	AFL6550A/C02	Wiper Blade (set)	Flat	Set (2 wipers)	650/500	26/20	CR1206, CR1202	4044197674374
	AFL6553F	AFL6553F/C02	Wiper Blade (set)	Flat	Set (2 wipers)	650/530	26/21	CR1209	4044197674381
	AFL6555A	AFL6555A/C02	Wiper Blade (set)	Flat	Set (2 wipers)	650/550	26/22	CR1206	4044197674398
	AFL6560B	AFL6560B/C02	Wiper Blade (set)	Flat	Set (2 wipers)	650/600	26/24	CR1203 or CR1214	4044197674404
	AFL6565E	AFL6565E/C02	Wiper Blade (set)	Flat	Set (2 wipers)	650/650	26/26	CR1213, CR1202, CR1208	4044197674411
	AFL6858A	AFL6858A/C02	Wiper Blade (set)	Flat	Set (2 wipers)	680/580	27/23	CR1206	4044197674428
	AFL6863A	AFL6863A/C02	Wiper Blade (set)	Flat	Set (2 wipers)	680/630	27/25	CR1206	4044197674435
	AFL7040A	AFL7040A/C02	Wiper Blade (set)	Flat	Set (2 wipers)	700/400	28/16	CR1206, CR1209	4044197843824
	AFL7055	AFL7055/C02	Wiper Blade (set)	Flat	Set (2 wipers)	700/550	28/22	9x3	4044197674442
	AFL7055B	AFL7055B/C02	Wiper Blade (set)	Flat	Set (2 wipers)	700/550	28/22	CR1203 or CR1214	4044197674459
NEW	AFL7060A	AFL7060A/C02	Wiper Blade (set)	Flat	Set (2 wipers)	700/600	28/24	CR1206	4060426059613
NEW	AFL7550A	AFL7550A/C02	Wiper Blade (set)	Flat	Set (2 wipers)	750/500	30/20	CR1206	4060426158361
	AFL7563B	AFL7563B/C02	Wiper Blade (set)	Flat	Set (2 wipers)	750/630	30/25	CR1203 or CR1214	4044197843831
	AFL7570A	AFL7570A/C02	Wiper Blade (set)	Flat	Set (2 wipers)	750/700	30/28	CR1206	4044197843848
	AFL8070A	AFL8070A/C02	Wiper Blade (set)	Flat	Set (2 wipers)	800/700	32/28	CR1206	4044197674466
	AFL8075E	AFL8075E/C02	Wiper Blade (set)	Flat	Set (2 wipers)	800/750	32/30	CR1213, CR1207	4044197674473

AFU5555	AFU5555/C02	Wiper Blade (set)	Flat	Set (2 wipers)	550/550	22/22	9x3	4044197675548
AFU5853B	AFU5853B/C02	Wiper Blade (set)	Flat	Set (2 wipers)	580/530	23/21	CR1203 or CR1214	4044197674978
AFU6040A	AFU6040A/C02	Wiper Blade (set)	Flat	Set (2 wipers)	600/400	24/16	CR1206	4044197674985
AFU6058C	AFU6058C/C02	Wiper Blade (set)	Flat	Set (2 wipers)	600/580	24/23	CR1203	4044197674992
AFU6555G	AFU6555G/C02	Wiper Blade (set)	Flat	Set (2 wipers)	650/550	26/22	CR1207	4044197675005
AFU6555H	AFU6555H/C02	Wiper Blade (set)	Flat	Set (2 wipers)	650/550	26/22	Special	4044197675012
AFU6558B	AFU6558B/C02	Wiper Blade (set)	Flat	Set (2 wipers)	650/580	26/23	CR1203 or CR1214	4044197675029
AFU6565A	AFU6565A/C02	Wiper Blade (set)	Flat	Set (2 wipers)	650/650	26/26	CR1206	4044197675036
AFU6565B	AFU6565B/C02	Wiper Blade (set)	Flat	Set (2 wipers)	650/650	26/26	CR1203 or CR1214	4044197675043
AFU6565E	AFU6565E/C02	Wiper Blade (set)	Flat	Set (2 wipers)	650/650	26/26	CR1213	4044197675050
AFU7060B	AFU7060B/C02	Wiper Blade (set)	Flat	Set (2 wipers)	700/600	28/24	CR1203 or CR1214	4044197675074
AFU7065B	AFU7065B/C02	Wiper Blade (set)	Flat	Set (2 wipers)	700/650	28/26	CR1203 or CR1214	4044197675081
AFU7065E	AFU7065E/C02	Wiper Blade (set)	Flat	Set (2 wipers)	700/650	28/26	CR1213	4044197675098
AFU7070B	AFU7070B/C02	Wiper Blade (set)	Flat	Set (2 wipers)	700/700	28/28	CR1203 or CR1214	4044197858781
AFU7070E	AFU7070E/C02	Wiper Blade (set)	Flat	Set (2 wipers)	700/700	28/28	CR1213, CR1202	4044197675104
AFU7565A	AFU7565A/C02	Wiper Blade (set)	Flat	Set (2 wipers)	750/650	30/26	CR1206	4044197675111
AFU7565G	AFU7565G/C02	Wiper Blade (set)	Flat	Set (2 wipers)	750/650	30/26	CR1207	4044197675128
AFU7570E	AFU7570E/C02	Wiper Blade (set)	Flat	Set (2 wipers)	750/700	30/28	CR1213, CR1202	4044197675135
AFU7575A	AFU7575A/C02	Wiper Blade (set)	Flat	Set (2 wipers)	750/750	30/30	CR1206	4044197675142
AFU7575B	AFU7575B/C02	Wiper Blade (set)	Flat	Set (2 wipers)	750/750	30/30	CR1203 or CR1214	4044197858798

AEROVANTAGE

x 1

Part No	Stock Code	Description	Type	Quantity Unit			Adaptor Enclosed	Barcode
R29	R29/C01	Wiper Blade Rubber		1			n/a	5010874950238
R32	R32/C01	Wiper Blade Rubber		1			n/a	5010874950245
R33	R33/C01	Wiper Blade Rubber		1			n/a	5010874950252
R35	R35/C01	Wiper Blade Rubber		1			n/a	5010874950269
R38	R38/C01	Wiper Blade Rubber		1			n/a	5010874950276
R40	R40/C01	Wiper Blade Rubber		1			n/a	5010874950283
R41	R41/C01	Wiper Blade Rubber		1			n/a	5010874950290
R50	R50/C01	Wiper Blade Rubber		1			n/a	5010874950306

AEROVANTAGE

x 2

Part No	Stock Code	Description	Type	Quantity Unit			Adaptor Enclosed	Barcode
R51	R51/C02	Wiper Blade Rubber (set)		2			n/a	5010874950320
R53	R53/C02	Wiper Blade Rubber (set)		2			n/a	4044197340088
R55	R55/113	Wiper Blade Rubber (set)		2			n/a	5010874960220
R65C	R65C/C02	Wiper Blade Rubber (set)		2			n/a	5010874950344
R65D	R65D/C02	Wiper Blade Rubber (set)		2			n/a	5010874950351

EN - IMPORTANT

Reproduction of this catalogue or parts thereof is only allowed with our explicit permission in writing. Pictorial representations and design are copyrighted. Claims for damages, of any form whatsoever, resulting from details made in this catalogue or from incorrect use, application, storage or handling, are explicitly excluded. Contractual rights and any resulting or related claims based thereon, irrespective of form, initially come into being on the basis of a separate written agreement, in particular on the basis of our general terms of sale and delivery. All former statements lose their validity with the publication of this catalogue. The catalogue is not an operating manual for the use and installation of the wipers. It does not contain any advice in a legal sense. The catalogue neither replaces the constantly applicable technical regulations – particularly for tolerances – nor the installation and maintenance stipulations of the individual vehicle manufacturer. Also, it is not possible to forego the expertise of those carrying out the installation and application. The individual references made in this catalogue for the installation and the application of the wipers are instructions solely for the technically qualified specialist and are to be checked and verified by them for their suitability in each case. Federal-Mogul accepts no responsibility for application decisions. The contents of the catalogue are not intended to create or substitute any contractual agreement which has to be reserved exclusively to a separate agreement between 2 identified parties, whereby seller can be only one of our Federal-Mogul entities as mentioned on the back cover page. The right is retained to correct errors and alterations, particularly with regard to amendments in the vehicle manufacturer's details and stipulations.

FR - IMPORTANT

La reproduction de ce catalogue, même partielle, n'est autorisée qu'avec notre accord préalable et par écrit. Les illustrations graphiques et la présentation font l'objet d'un copyright. Nous excluons toutes réclamations ayant pour objet ce catalogue ou pouvant résulter de son incompréhension, portant sur de mauvaises utilisations, manipulations, manutentions ou mauvais stockage. Des droits contractuels et des droits dérivés, de quelque nature qu'ils soient, ne peuvent résulter que d'un accord écrit, particulièrement sur la base de nos conditions générales de ventes et de livraisons. Ce catalogue annule et remplace toute édition antérieure. Le catalogue n'est pas une notice d'utilisation et de montage des balais d'essuie-glaces. Il ne contient pas de directives en tant que telles. Le catalogue ne remplace ni les prescriptions techniques, toujours prioritaires, particulièrement pour les tolérances, ni les prescriptions de montage et d'entretien des constructeurs automobiles. Il ne peut en aucun cas remplacer les connaissances professionnelles nécessaires pour le montage et l'utilisation. Les remarques données pour le montage et l'utilisation des balais d'essuie-glaces sont exclusivement destinées au professionnel averti et de formation technique, à qui il appartiendra de vérifier la conformité des indications pour chaque cas. La responsabilité des décisions d'utilisation ne peut être prise en charge par Federal-Mogul. Le contenu de ce catalogue ne peut constituer ou remplacer un contrat qui doit faire l'objet d'un document séparé établit entre 2 parties, dont l'une doit être une entité légale de Federal-Mogul dont la liste figure sur la couverture arrière. Nous nous réservons le droit d'apporter des corrections d'erreurs et modifications, suite notamment à de nouvelles données fournies par les constructeurs.

DE - WICHTIGE HINWEISE

Nachdruck, auch auszugsweise, ist nur mit unserer ausdrücklichen schriftlichen Zustimmung gestattet. Die bildlichen Darstellungen und Ausstattungen sind geschützt. Ersatzansprüche, gleich welcher Art, aufgrund der Angaben in diesem Katalog oder auf Grund unsachgemäßem Umgang, unsachgemäßer Verwendung, Lagerung oder Handhabung der angebotenen Produkte, sind ausdrücklich ausgeschlossen. Vertragliche Ansprüche und daraus abgeleitete oder darauf beruhende Ansprüche, gleich welcher Art, kommen erst auf Grund einer besonderen schriftlichen Vereinbarung, insbesondere auf der Grundlage unserer allgemeinen Verkaufs- und Lieferbedingungen, zustande. Der Katalog ist keine Einbauanleitung für Scheibenwischer. Er enthält keine Beratung im Rechtssinne. Der Katalog ersetzt weder die immer vorrangigen technischen Vorschriften, insbesondere für Toleranzen, sowie die Einbau- und Wartungsvorschriften des jeweiligen Automobilherstellers, noch kann auf das notwendige Fachwissen des die Montage und die Verwendung Durchführenden verzichtet werden. Die in diesem Katalog jeweils gegebenen Hinweise für Einbau und Verwendung der Scheibenwischer sind Hinweise ausschließlich für den technisch ausgebildeten und versierten Fachmann, die von ihm im jeweiligen Anwendungsfall auf ihre Eignung geprüft und entschieden werden müssen. Eine Haftung wird von Federal-Mogul für Anwendungsentscheidungen nicht übernommen. Die Inhalte dieses Katalogs sind nicht dazu bestimmt eine vertragliche Verpflichtung zu begründen oder zu ersetzen, was ausschliesslich einer gesonderten Vereinbarung zwischen 2 konkret bezeichneten Parteien vorbehalten bleibt, wobei der Verkäufer eine unserer Federal-Mogul Gesellschaften sein wird, wie auf der Rückseite des Kataloges. Die Korrektur von Irrtümern und Änderungen, insbesondere auf Grund von geänderten Angaben und Vorschriften der Automobilhersteller, bleibt vorbehalten.

IT - IMPORTANTE

La riproduzione di questo catalogo, anche parziale, e' permessa soltanto in seguito ad una autorizzazione scritta. I grafici ed i disegni sono marchio depositato. Reclami per difetti, di qualsiasi natura essi siano, relativi al contenuto di questo catalogo, o all'uso improprio di esso, verranno respiniti. Le pretese avanzate od i reclami dovranno essere in conformita' con le nostre condizioni generali di vendita. Il presente catalogo annulla e sostituisce tutte le edizioni precedenti. Il catalogo non e' un manuale per l'utilizzo ed il montaggio delle spazzole. Non contiene indicazioni in questo senso. Esso non sostituisce le descrizioni tecniche, sempre priotarie, in particolare per le tolleranze, ne le istruzioni relative al montaggio ed alla manutenzione date dai costruttori. Non puo' in nessun caso essere paragonato alla conoscenza professionale necessaria per il montaggio e l'utilizzo. Le considerazioni sul montaggio delle spazzole, fatte su questo catalogo, sono destinate esclusivamente a professionisti con formazione tecnica i quali verificheranno l'esattezza della informazioni, in ogni caso. Le responsabilita' derivanti dall'utilizzo improprio dello stesso non potranno essere addebitate alla Federal-Mogul. I contenuti del catalogo non sostituiscono in alcun modo gli accordi contrattuali che sono riservati esclusivamente a due contraenti definiti, come venditore si intende una delle società Federal-Mogul menzionate sul retro del catalogo. Ci riserviamo di apportare correzioni e modifiche relative, in particolare a dati o istruzioni ricevute dal costruttore.

ES - IMPORTANTE

Queda totalmente prohibida la reproducción, total o parcial, del contenido de este catálogo, salvo nuestra previa autorización por escrito. Están, asimismo, reservados todos los derechos sobre el diseño y representación pictórica del catálogo. No se aceptará ningún tipo de reclamación fundamentada en la interpretación de los datos contenidos en este catálogo, así como en el incorrecto uso, manipulación o almacenaje de nuestras piezas. Únicamente se aceptarán reclamaciones que estén basadas en derechos contractuales o en los motivos arriba indicados siempre que exista un acuerdo especial y por escrito, con base en nuestras condiciones generales de venta y suministro. Con la edición de este catálogo queda anulada toda la información contenida en publicaciones anteriores. El catálogo no es un manual para el uso e instalación de las escobillas limpiaparabrisas, y no representa una asesoría técnica en el sentido legal. Los datos del catálogo no sustituyen, en ningún caso, a las especificaciones técnicas, tanto en lo que se refiere a tolerancias como a las instrucciones de instalación y mantenimiento indicadas por los fabricantes de vehículos, especificaciones que serán siempre prioritarias. Las indicaciones sobre uso y montaje de las escobillas limpiaparabrisas contenidas en este catálogo están exclusivamente dirigidas a profesionales con la debida cualificación y formación técnica, que deben decidir en cada caso sobre la exactitud de las mismas. La responsabilidad de estas decisiones no puede ser, en ningún caso, atribuida a Federal-Mogul. La información facilitada en el catálogo no representa o sustituye ningún tipo de acuerdo, quedando a tal efecto el acuerdo por separado entre dos partes identificadas, donde la parte vendedora sólo puede ser una de las entidades de Federal-Mogul mencionadas en la contraportada del catálogo. Los datos e instrucciones contenidos en este catálogo podrán ser corregidos o modificados sin previo aviso.

RU - ВАЖНО

Копирование данного каталога или его частей дозволяется исключительно при получении нашего разрешения в письменной форме. Иллюстрации и дизайн защищены авторским правом. Требования о возмещении ущерба любой формы, исходя из содержания каталога или из-за неправильного использования, хранения или обращения, абсолютно исключены. Договорные права и любые результирующие или связанные с этим требования, независимо от их формы, должны являться частью отдельного письменного соглашения и основываться на наших общих условиях продаж и поставок. Все прежние утверждения теряют свою юридическую силу с момента публикации данного каталога. Каталог не является руководством пользователя и инструкцией по установке стеклоочистителей. Он не содержит советов в юридическом понимании этого слова. Каталог не является заменой для издаваемых автопроизводителями технических инструкций по ремонту, в особенности для допусков технических величин, а также инструкций по монтажу и регламентному обслуживанию. Отдельные ссылки для установки и использования стеклоочистителей, приведенные в этом каталоге, являются инструкциями исключительно для технически компетентного специалиста и в каждом случае должны быть проверены им на предмет их пригодности. Federal-Mogul не несет ответственность за ремонтные работы. Содержимое каталога не предназначено для создания или замены любого контрактного соглашения, которое может быть оформлено только в виде отдельного соглашения между двумя установленными сторонами, где продавцом может являться только одно из юридических лиц Federal-Mogul, как упомянуто на внутренней стороне обложки каталога. Federal-Mogul оставляет за собой право вносить исправления и изменения в частности в отношении поправок по деталям изготовителей транспортных средств и их условиям.

PL - WAŻNE

Powielanie tego katalogu lub jakiejkolwiek jego części jest dopuszczalne wyłącznie po uzyskaniu naszej jednoznacznej pisemnej zgody. Prezentacje graficzne i projekt są chronione prawami autorskimi. Jednoznacznie wykluczone są roszczenia odnośnie wszelkiego rodzaju szkód wynikających z informacji zawartych w tym katalogu, a także z nieprawidłowego użycia, zastosowania, magazynowania lub przechowywania. Wszelkie uprawnienia kontraktowe, a także wszelkie inne oparte na nich roszczenia, niezależnie od ich formy, wymagają do swej ważności osobnego pisemnego porozumienia sporządzonego w oparciu o nasze ogólne warunki sprzedaży i dostawy. Wszelkie wcześniejsze oświadczenia tracą ważność wraz z publikacją niniejszego katalogu. Niniejszy katalog nie jest podręcznikiem obsługi, opisującym sposób użytkowania i montażu wycieraczek szyb samochodowych. Nie zawiera on żadnych porad o

charakterze prawnym. Niniejszy katalog nie zastępuje także aktualnie obowiązujących norm technologicznych – w szczególności dotyczących tolerancji – ani wskazówek poszczególnych producentów pojazdów odnośnie montażu i konserwacji. Nie może także zastępować specjalistycznego doświadczenia w zakresie montażu i zastosowań. Wszelkie podane w tym katalogu informacje odnośnie montażu i zastosowania wycieraczek są przeznaczone wyłącznie dla specjalistów o odpowiednich kwalifikacjach technicznych i muszą być zawsze sprawdzane oraz weryfikowane pod kątem ich odpowiedniości do konkretnego przypadku. Firma Federal-Mogul nie ponosi odpowiedzialności za decyzje odnośnie konkretnych zastosowań. Treść niniejszego katalogu nie może stanowić ani zastępować porozumienia, które musi przyjmować formę osobnej umowy pomiędzy dwoma ściśle określonymi stronami, w której jako Sprzedawca może występować wyłącznie jeden z podmiotów Federal-Mogul (zob. wykaz na tylnej okładce). Zastrzegamy sobie prawo do wprowadzania poprawek i zmian, a w szczególności do modyfikacji danych wprowadzanych przez producentów pojazdów.

CZ - DŮLEŽITÉ

Jakákoliv reprodukce tohoto katalogu nebo jeho části je přípustná jen s naším výslovným písemným povolením. Ilustrace a design jsou chráněny autorským právem. Výslovně se vylučují jakékoliv nároky na odškodnění jakéhokoliv druhu v souvislostí s detaily uvedenými v tomto katalogu nebo s nesprávným použitím, aplikací, skladováním nebo manipulací. Smluvní práva a jakékoliv vyplývající nebo související nároky, bez ohledu na jejich formu, primárně vycházejí ze samostatné písemné dohody, zejména z našich všeobecných prodejních a dodacích podmínek. S publikací tohoto katalogu ztrácejí platnost veškerá předchozí prohlášení. Katalog není provozním návodem k použití a instalaci stěračů. Neobsahuje žádné rady v zákonném slova smyslu. Katalog ani nenahrazuje trvale platné technické předpisy – zejména tolerance – ani podmínky instalace či údržby stanovené jednotlivými výrobci vozidel. Dále je nutno zajistit kvalifikovanost osob provádějících instalaci a použití výrobku. Jednotlivé odkazy obsažené v tomto katalogu ve vztahu k instalaci a použití stěračů jsou pokyny určené výhradně pro technicky kvalifikované specialisty, kteří jsou v každém případě povinni zkontrolovat a ověřit jejich vhodnost. Společnost Federal-Mogul nepřijímá žádnou odpovědnost za rozhodnutí o aplikaci (použití). Obsah katalogu není určen k vytvoření nebo nahrazení jakékoliv smluvní dohody, které je nutno realizovat výlučně na základě samostatné smlouvy mezi 2 identifikovanými stranami, přičemž prodávající může být pouze jeden z našich subjektů Federal-Mogul uvedených na vnitřní straně obálky katalogu. Ponecháváme si právo na opravu chyb a provádění změn, zvláště ve vztahu ke změnám detailů a podmínek výrobců vozidel.

HU - FONTOS

Ennek a katalógusnak vagy részének a sokszorosítása csak kifejezett írásos engedéllyel megengedett. A képi illusztrációkat és a formai kialakítást szerzői jog védi. Az ebben a katalógusban foglaltakkal kapcsolatban, illetve nem megfelelő használatból, alkalmazásból, tárolásból vagy kezelésből eredően kárigény nem támasztható . A szerződéses jogok, illetve az ezen alapuló vagy ebből eredő követelések jellegüktől függetlenül egy külön írásos szerződés keretén belül lépnek hatályra, különös tekintettel az általános értékesítési és szolgáltatási feltételeink szerint. Minden korábbi megállapodás elveszíti az rvényességét a katalógus kiadását követően. Ez a katalógus nem egy, az ablaktörlő lapátok használatára és beszerelésére vonatkozó kézikönyv. Jogi értelemben nem tartalmaz semmilyen tanácsot. A katalógus nem helyettesíti a mindenkor érvényben lévő műszaki előírásokat (különösen a tűréseket nem), illetve az egyes járműgyártók beszerelési és arbantartási utasításait. Ezen felül nem helyettesíti a beszerelést és alkalmazást végzők tapasztalatát. Az ebben a katalógusban lévő, ablaktörlő lapátok beszerelésére és alkalmazására vonatkozó egyes hivatkozások kizárólag műszakilag képzett szakembereknek szólnak, és megfelelőségüket az egyes esetekben nekik kell ellenőrizniük. A Federal-Mogul nem vállal felelősséget az alkalmazással kapcsolatos döntésekért. Ennek a katalógusnak a tartalma nem hoz létre vagy helyettesít egy olyan szerződéses megállapodást, amelyet kizárólag két fél között kívántak létrehozni, ahol az eladó valamelyik, a belső hátsó borítón említett Federal-Mogul mint jogi személy. Fenntartjuk a jogot a hibák kijavítására és a módosításokra, különös tekintettel a motorgyártó részleteinek és a kikötéseinek részleteivel kapcsolatban.

RO - IMPORTANT

Reproducerea totală sau parţială a acestui catalog este permisă doar cu acordul nostru explicit în scris. Ilustraţiile şi designul sunt protejate de drepturi de autor. Revendicările de daune, sub orice formă, care rezultă din detaliile prezentate în acest catalog sau prin utilizarea, aplicarea, stocarea sau manipularea incorectă, sunt excluse în mod explicit. Drepturile contractuale şi orice revendicări rezultate sau aferente bazate pe acestea, indiferent de formă, îşi au originea pe baza unui acord scris separat, în special pe baza condiţiilor noastre generale de comercializare şi livrare. Toate declaraţiile anterioare îşi pierd valabilitatea odată cu publicarea acestui catalog. Catalogul nu este un manual de utilizare destinat folosirii şi montării ştergătoarelor. Acesta nu conţine nicio recomandare din punct de vedere legal. Catalogul nu înlocuieşte normele tehnice aplicabile în mod constant – în special pentru toleranţe – şi nici specificaţiile privind montarea şi întreţinerea ale producătorului de vehicule individual. De asemenea, nu are prioritate asupra experienţei celor care efectuează montarea şi aplicarea. Referinţele individuale din acest catalog pentru instalarea şi aplicarea ştergătoarelor sunt instrucţiuni destinate exclusiv specialiştilor cu calificare tehnică şi trebuie verificate de aceştia în vederea determinării oportunităţii lor. Federal-Mogul nu acceptă nicio responsabilitate pentru deciziile de aplicare. Conţinutul catalogului nu este conceput să creeze sau să substituie niciun acord contractual care trebuie rezervat exclusiv între-un acord separat între două părţi identificate, prin care vânzătorul poate fi doar una dintre organizaţiile noastre Federal-Mogul, aşa cum se menţionează pe interiorul contracoperţii. Ne rezervăm dreptul de a corecta erorile şi modificările, în special cu privire la amendamentele din detaliile şi specificaţiile producătorilor de vehicule.

BG - ВАЖНО

Възпроизвеждането на този каталог или на части от него може да става само с нашето изрично писмено разрешение. Картинните изображения и проекти са предмет на авторско право. Рекламации за повреди в каквато и да е форма в резултат на данни в този каталог или на неправилно използване, прилагане, съхранение или манипулация, се изключват изрично. Договорни права и всякакви произтичащи или свързани рекламации, основани на тях, независимо от формата им, първоначално възникват на основата на отделно писмено споразумение, по-специално на основата на нашите общи условия за продажба и доставка. Всички предишни изявления стават невалидни след публикуването на този каталог. Каталогът не представлява ръководство за експлоатация и използване на чистачките. Той не съдържа съвети в правния смисъл на думата. Каталогът не заменя непрекъснато приложимите технически регламенти - по-специално тези, отнасящи се до допуските - нито препоръките за монтаж и техническо обслужване на всеки отделен производител на превозно средство. Също така не е възможно да се пренебрегне опитът на тези, които извършват монтажа и приложението. Отделните препратки в този каталог относно монтажа и приложението на чистачките представляват инструкции единствено за технически квалифицираните специалисти, които трябва да проверяват дали те са подходящи за всеки отделен случай. Federal-Mogul не поема отговорност за решения за приложение. Съдържанието на каталога няма за цел да създава или замества някакво договорно споразумение, като това може да стане изключително с отделно споразумение между 2 идентифицирани страни, като продавачът може да бъде само един от нашите Federal-Mogul субекти, както е посочено на задната корица. Запазваме си правото да коригираме грешки и да правим изменения, по-специално по отношение на изменения на данните и условията относно производителя на превозното средство.

RS - VAŽNO

Reprodukcija ovog kataloga ili njegovih delova je dozvoljena samo uz izričitu pismenu dozvolu. Slikovne reprezentacije i dizajn su zaštićeni autorskim pravima. Zahtevi za obeštećenje, u bilo kom obliku, koji se zasnivaju na detaljima iz ovog kataloga ili na neispravnoj upotrebi, primeni, skladištenju ili rukovanju, izričito su isključeni. Ugovorna prava i bilo koji proizilazeći ili povezani zahtevi zasnovani na njima, bez oblika na oblik, prvobitno nastaju na osnovu posebnog pismenog ugovora, posebno na osnovu naših opštih uslova prodaje i isporuke. Sve prethodne izjave gube svoju važnost sa objavljivanjem ovog kataloga. Ovaj katalog ne predstavlja uputstvo za upotrebu i instalaciju brisača. On ne sadrži nikakav savet u pravnom smislu. Katalog takođe ne menja stalno primenljive tehničke propise – posebno za tolerancije – niti navode za instalaciju i održavanje proizvođača vozila. Takođe, nije moguće zanemariti stručnost osoba koje obavljaju instalaciju i primenu. Pojedinačne reference koje su navede u ovom katalogu za instalaciju i primenu brisača su uputstva samo za tehnički kvalifikovanog stručnjaka koje on u svakom slučaju treba da proveri i potvrdi u smislu njihove valjanosti. Federal-Mogul ne prihvata nikakvu odgovornost za odluke u vezi sa primenom. Svrha sadržaja kataloga nije da stvori ili zameni bilo koji ugovor koji mora da bude rezervisan isključivo za poseban dogovor između 2 identifikovane strane, gde prodavac može da bude samo jedno od naših Federal-Mogul lica kao što je spomenuto na zadnjoj korici. Zadržavamo pravo da ispravimo greške i izmene, posebno u pogledu modifikacija detalja i navoda proizvođača vozila.

TK - ÖNEMLİ

Bu kataloğun veya bölümlerinin çoğaltılması yalnızca bizim açık, yazılı iznimizle mümkündür. Resimler ve tasarımlar telif haklarıyla orunmaktadır. Bu katalogda yer alan bilgiler veya yanlış kullanım, uygulama veya taşımadan kaynaklanan zarar iddiası, her ne şekilde olursa olsun kabul edilmez. Sözleşmeden doğan haklar veya buna ilişkin veya bundan doğan tüm sonuçlar ayrı bir yazılı anlaşmaya tabi olup genel satış ve teslimat koşullarımıza dayalıdır. Bu kataloğun yayınlanmasıyla birlikte önceki tüm ifadeler geçerliliğini yitirir. Bu katalog, sileceklerin kullanımına ve montajına yönelik bir kullanım kılavuzu değildir ve yasal anlamda herhangi bir tavsiye veya öneri içermemektedir. Bu katalog, ne geçerli teknik düzenlemelerin; özellikle de toleranslara ilgili olanların, ne de araç üreticisinin montaj ve bakım talimatlarının yerine geçemez. Ayrıca, montaj ve uygulama işlemlerini gerçekleştirenlerin uzmanlığından feragat edilemez. Sileceklerin montaj ve uygulanmasına yönelik olarak bu katalogda yer alan referanslar, yalnızca teknik açıdan nitelikli uzmanlar için olup bu referansların uygunluğu her iş parçasında kontrol edilip onaylanmalıdır. Federal-Mogul, uygulama kararlarına ilişkin herhangi bir sorumluluk kabul etmez. Kataloğun içindekiler, satıcının yalnızca, arka kapakta bahsedilen Federal-Mogul markalarından birinin bayisi olabildiği ve tanımlanmış 2 taraf arasında yapılan ayrı bir anlaşmaya özel olması gereken bir sözleşme oluşturma veya böyle bir sözleşmenin yerine geçme amacı taşımaz. Özellikle de araç üreticisinin bilgileri ve koşullarında yapılan değişikliklerle ilgili hata ve değişiklikleri düzeltme hakkımız saklıdır.

© Federal-Mogul Corporation 2013
The contents of this publication are the copyright of Federal-Mogul Corporation.
Unauthorized reproduction in whole or in part is expressly forbidden.
Champion is a trademark of Federal-Mogul Corporation.

AEROVANTAGE

ABARTH												
124 Spider (348_)	03/16→											
Hybrid Blade							AHL45	AHL48				
500 (312_)	01/08→											
		AFL60	AFL35	AFL6035A	A					AP28		
500C (312_)	09/09→											
		AFL60	AFL35	AFL6035A	A							
GRANDE PUNTO (199_)	12/07→12/12											
		AFL65	AFL38	AFL6538B	B					AP30		
PUNTO (199_)	03/12→											
		AFL65	AFL38	AFL6538B	B					AP30		
PUNTO EVO (199_)	07/08→02/12											
		AFL65	AFL38	AFL6538B	B					AP30		
ALFA ROMEO												
4C (960_)	03/13→											
	x 1	AFL58			A							
4C SPIDER (960_)	10/14→											
	x 1	AFL58			A							
8C (920_)	01/07→10/09						A55	A51				
	+ Spoiler						AS55					
8C SPIDER (920_)	01/08→10/10						A55	A51				
	+ Spoiler						AS55					
147 (937_)	11/00→12/10											
→03/05							A55	A41		R38		
→03/05	+ Spoiler						AS55		AS5541	A380R		
04/05→		AFL55	AFL40		E							
156 (932_)	09/97→09/05						A55	A53				
	+ Spoiler						AS55					
									ASC5553			
156 Sportwagon (932_)	01/00→05/06						A55	A53		R38		
	+ Spoiler						AS55			A380R		
									ASC5553			
159 (939_)	09/05→12/12											
		AFL58	AFL45	AFL5845E	E							
159 Sportwagon (939_)	03/06→12/12											
		AFL58	AFL45	AFL5845E	E							
166 (936_)	09/98→06/07						A53	A48				
	+ Spoiler						AS53					
				AFL5348L	L							
BRERA (939_)	01/06→05/11											
		AFL58	AFL45	AFL5845E	E							
GIULIA (952_)	10/15→											
		AFL60	AFL45	AFL6045B	F							

A	B	C	D	E	F	G	H	J	K	L	M
CR1211 CR1206	CR1211 CR1203 CR1214	CR1211 CR1203 CR1214	CR1208	CR1202 CR1213	CR1209	CR1207	Special	Special	Special	Special	CR3007

AEROVANTAGE

...ALFA ROMEO											
GIULIETTA (940_)	04/10→										
		AFL58	AFL45	AFL5845E	A					AP35	
GT (937_)	11/03→09/10										
→03/05						A55	A41				
→03/05 + Spoiler						AS55		AS5541			
04/05→		AFL55	AFL40		E						
MITO (955_)	08/08→										
		AFL65	AFL40	AFL6540B	B					AP30	
SPIDER (939_)	03/06→03/11										
		AFL58	AFL45	AFL5845E	E						
STELVIO (949_)	12/16→										
		AFL65	AFL45	AFL6545F	F						
ALPINA											
B3 (E46)	03/99→01/06							A6051			
B3 (E90)	09/07→05/13										
→08/09		AFL60	AFL48	AFL6048E	E						
09/09→		AFL60	AFL48	AFL6048B	B						
B3 (F30)	03/13→										
		AFL60	AFL48	AFL6048B	B						
B3 Convertible (E46)	03/99→12/05							A6051			
B3 Convertible (E93)	09/07→05/13										
→08/09		AFL60	AFL40	AFL6040E	E						
09/09→		AFL60	AFL40	AFL6040E	B						
B3 Coupe (E36)	04/96→03/99					A53	A51				
+ Spoiler						AS53					
				AFL5350L	L						
B3 Coupe (E46)	03/99→01/06							A6051			
B3 Coupe (E92)	09/07→02/14										
→08/09		AFL60	AFL40	AFL6040E	E						
09/09→		AFL60	AFL40	AFL6040E	B						
B3 Estate (E46)	03/99→01/06							A6051			
B3 Estate (E91)	09/07→05/13										
→08/09		AFL60	AFL48	AFL6048E	E						
09/09→		AFL60	AFL48	AFL6048B	B						
B3 Estate (F31)	03/13→										
		AFL60	AFL48	AFL6048B	B						
B4 Convertible (F33)	03/14→										
		AFL60	AFL45	AFL6045B	B						
B4 Coupe (F32)	03/14→										
		AFL60	AFL45	AFL6045B	B						
B5 (E60)	03/05→09/10										
		AFL60	AFL58	AFU6058C	C						

A	B	C	D	E	F	G	H	J	K	L	M
CR1211 CR1206	CR1211 CR1203 CR1214	CR1211 CR1203 CR1214	CR1208	CR1202 CR1213	CR1209	CR1207	Special	Special	Special	Special	CR3007

...ALPINA

B5 (F10)	09/10→12/16											
		AFL65	AFL45	AFL6545D	D							
B5 (G30)	03/17→											
		AFL65	AFL48	AFL6548A	A							
B5 Estate (E61)	03/05→09/10											
		AFL60	AFL58	AFU6058C	C							
B5 Estate (F11)	09/10→12/16											
		AFL65	AFL45	AFL6545D	D							
B5 Touring (G31)	03/17→											
		AFL65	AFL48	AFL6548A	A							
B6 Convertible (E64)	04/06→08/10											
		AFL60	AFL58	AFU6058C	C							
B6 Convertible (F12)	09/11→											
		AFL65	AFL43		D							
B6 Coupe (E63)	04/06→08/10											
		AFL60	AFL58	AFU6058C	C							
B6 Coupe (F13)	09/11→											
		AFL65	AFL43		D							
B6 Coupe (F06)	04/14→											
		AFL65	AFL43		D							
B7 (F01, F02)	03/09→01/16											
		AFL65	AFL45	AFL6545D	D							
B7 (G12)	02/16→											
		AFL65	AFL48	AFL6548A	A							
B8 (E36)	01/95→03/98					A53	A51					
+ Spoiler						AS53						
				AFL5350L	L							
B8 Convertible (E36)	01/95→03/98					A53	A51					
+ Spoiler						AS53						
				AFL5350L	L							
B8 Coupe (E36)	01/95→03/98					A53	A51					
+ Spoiler						AS53						
				AFL5350L	L							
B8 Estate (E36)	01/95→03/98					A53	A51					
+ Spoiler						AS53						
				AFL5350L	L							
B10 (E39)	12/96→05/04							A6555				
B10 Estate (E39)	01/97→05/04							A6555				
B12 (E38)	12/95→07/01						A60					
+ Spoiler						AS60		AS6060				
D3 (E90)	12/05→02/14											
→08/09		AFL60	AFL48	AFL6048E	E							
09/09→		AFL60	AFL48	AFL6048B	B							

A	B	C	D	E	F	G	H	J	K	L	M
CR1211 CR1206	CR1211 CR1203 CR1214	CR1211 CR1203 CR1214	CR1208	CR1202 CR1213	CR1209	CR1207	Special	Special	Special	Special	CR3007

AEROVANTAGE

...ALPINA											
D3 (F30)	03/14→										
		AFL60	AFL48	AFL6048B	B						
D3 Coupe (E92)	07/08→05/13										
→08/09		AFL60	AFL40	AFL6040E	E						
09/09→		AFL60	AFL40	AFL6040E	B						
D3 Estate (E91)	12/05→05/13										
→08/09		AFL60	AFL48	AFL6048E	E						
09/09→		AFL60	AFL48	AFL6048B	B						
D3 Estate (F31)	03/14→										
		AFL60	AFL48	AFL6048B	B						
D4 Convertible (F33)	09/14→										
		AFL60	AFL45	AFL6045B	B						
D4 Coupe (F32)	09/14→										
		AFL60	AFL45	AFL6045B	B						
D5 (F10)	09/11→12/16										
		AFL65	AFL45	AFL6545D	D						
D5 (G30)	07/17→										
		AFL65	AFL48	AFL6548A	A						
D5 Touring (F11)	09/11→12/16										
		AFL65	AFL45	AFL6545D	D						
D5 Touring (G31)	07/17→										
		AFL65	AFL48	AFL6548A	A						
D10 (E39)	04/00→10/03							A6555			
D10 Estate (E39)	04/00→10/03							A6555			
ROADSTER (Z8)	06/02→10/03					A53	A53				
+ Spoiler						AS53					
ROADSTER S (Z4)	07/03→12/05					A53	A51				
+ Spoiler						AS53					
				AFL5350L	L						
XD3 (F25)	04/13→										
		AFL65	AFL48	AFL6548E	E				AF33X		
AUDI											
A1 (8X1, 8XK)	05/10→										
		AFL60	AFL40	AFL6040F	F				AF37Y		
A1 Sportback (8XA, 8XF)	09/11→										
		AFL60	AFL40	AFL6040F	F				AF37Y		
A2 (8Z0)	02/00→08/05										
→06/01	x 1					T70H01					
07/01→	x 1	AFL75			E						

A	B	C	D	E	F	G	H	J	K	L	M
CR1211 CR1206	CR1211 CR1203 CR1214	CR1211 CR1203 CR1214	CR1208	CR1202 CR1213	CR1209	CR1207	Special	Special	Special	Special	CR3007

AEROVANTAGE

...AUDI

A3 (8L1)	09/96→06/03					A53	A48		A38	
+ Spoiler						AS53				
								ASC5348		
				AFL5348L	L					
				AFL5353L	L					
A3 (8P1)	05/03→08/12									
→10/04		AFL60	AFL48	AFL6048E	E				A33	
11/04→		AFL60	AFL48	AFL6048B	B					
A3 (8V1, 8VK)	04/12→									
		AFL65	AFL45	AFL6545F	F				AF34Y	
A3 Convertible (8P7)	04/08→05/13									
		AFL60	AFL48	AFL6048B	B					
A3 Convertible (8V7, 8VE)	10/13→									
		AFL65	AFL45	AFL6545F	F					
A3 Limousine (8VS, 8VM)	05/13→									
		AFL65	AFL45	AFL6545F	F					
A3 Sportback (8PA)	09/04→03/13									
→10/04		AFL60	AFL48	AFL6048E	E				A33	
11/04→		AFL60	AFL48	AFL6048B	B					
A3 Sportback (8VA, 8VF)	09/12→									
		AFL65	AFL45	AFL6545F	F				AF34Y	
A4 (8E2, B6)	11/00→12/04									
→10/03								R55		
11/03→				AFL5555K	K					
A4 (8EC, B7)	11/04→06/08									
				AFL5555K	K					
A4 (8K2, B8)	11/07→12/15									
		AFL60	AFL50	AFL6050F	F					
A4 (8W2, B9)	05/15→									
		AFL60	AFL50	AFL6050F	F					
A4 Allroad (8KH, B8)	04/09→05/16									
		AFL60	AFL50	AFL6050F	F					
A4 Allroad (8WH, B9)	01/16→									
		AFL60	AFL50	AFL6050F	F				AF37Y	
A4 Avant (8E5, B6)	04/01→12/04									
→10/03								R55		
11/03→				AFL5555K	K					
A4 Avant (8ED, B7)	11/04→06/08									
				AFL5555K	K				A33	
A4 Avant (8K5, B8)	11/07→12/15									
		AFL60	AFL50	AFL6050F	F				AF39Y	
A4 Avant (8W5, B9)	08/15→									
		AFL60	AFL50	AFL6050F	F				AF37Y	

A	B	C	D	E	F	G	H	J	K	L	M
CR1211 CR1206	CR1211 CR1203 CR1214	CR1211 CR1203 CR1214	CR1208	CR1202 CR1213	CR1209	CR1207	Special	Special	Special	Special	CR3007

AEROVANTAGE

...AUDI

A4 Convertible (8H7, B6, 8HE, B7)	04/02→03/09										
→10/03									R55		
11/03→				AFL5555K	K						
A5 (8T3)	06/07→01/17										
→12/07		AFL60	AFL50	AFL6050F	A						
01/08→		AFL60	AFL50	AFL6050F	F						
A5 (F53)	06/16→										
		AFL60	AFL50	AFL6050F	F						
A5 Convertible (8F7)	03/09→01/17										
		AFL60	AFL50	AFL6050F	F						
A5 Convertible (F57)	11/16→										
		AFL60	AFL50	AFL6050F	F						
A5 Sportback (8TA)	09/09→01/17										
		AFL60	AFL50	AFL6050F	F						
A5 Sportback (F5A)	09/16→										
		AFL60	AFL50	AFL6050F	F						
A6 (4B2, C5)	01/97→01/05										
→05/01						A55	A55				
→05/01 + Spoiler						AS55		AS5555			
06/01→				AFL5555K	K						
A6 (4F2, C6)	05/04→03/11										
				AFL5555J	J						
A6 (4G2, C7, 4GC)	11/10→										
		AFL65	AFL53	AFL6553F	F						
A6 Allroad (4FH, C6)	05/06→08/11										
				AFL5555J	J						
A6 Allroad (4GH, 4GJ)	01/12→										
		AFL65	AFL53	AFL6553F	F					AF39Y	
A6 Avant (4B5, C5)	11/97→01/05										
→05/01						A55	A55				
→05/01 + Spoiler						AS55		AS5555			
06/01→				AFL5555K	K						
A6 Avant (4F5, C6)	03/05→08/11										
				AFL5555J	J						
A6 Avant (4G5, C7, 4GD)	05/11→										
		AFL65	AFL53	AFL6553F	F					AF39Y	
A7 Sportback (4GA, 4GF)	10/10→										
				AFL6050F	F						
A7 Sportback (4KA)	10/17→										
				AFL6050F	F						
A8 (4H_)	11/09→										
		AFL68	AFL53		F						

A	B	C	D	E	F	G	H	J	K	L	M
CR1211 CR1206	CR1211 CR1203 CR1214	CR1211 CR1203 CR1214	CR1208	CR1202 CR1213	CR1209	CR1207	Special	Special	Special	Special	CR3007

...AUDI

A8 (4N2, 4N8)	06/17→											
		AFL68	AFL50		F							
ALLROAD (4BH, C5)	05/00→08/05											
→05/01						A55	A55					
→05/01 + Spoiler						AS55		AS5555				
06/01→				AFL5555K	K							
Q2	06/16→											
		AFL60	AFL48	AFL6048F	F						AF34Y	
Q3 (8U)	06/11→											
		AFL60	AFL50	AFL6050F	F						AF39Y	
Q5 (8R)	11/08→											
		AFL60	AFL50	AFL6050F	F						AF34Y	
Q5 (FYB)	05/16→											
		AFL60	AFL50	AFL6050F	F						AF37Y	
Q7 (4L)	03/06→08/15											
		AFL65	AFL65		B						A33	
Q7 (4M)	01/15→											
		AFL68	AFL50		F						AF39Y	
R8	07/15→											
		AFL55	AFL55		F							
R8 Spyder	05/16→											
		AFL55	AFL55		F							
TT (8N3)	10/98→06/06											
→07/03						A53	A53					
→07/03 + Spoiler						AS53						
→07/03								ASC5353				
→07/03				AFL5353L	L							
08/03→		AFL53	AFL53	AFL5353F	E							
TT (8J3)	08/06→06/14											
		AFL55	AFL53	AFL5553B	B							
TT (FV3)	07/14→											
		AFL60	AFL50	AFL6050F	F							
TT Roadster (8N9)	10/99→06/06											
→07/03						A53	A53					
→07/03 + Spoiler						AS53						
→07/03								ASC5353				
→07/03				AFL5353L	L							
08/03→		AFL53	AFL53	AFL5353F	E							
TT Roadster (8J9)	03/07→06/14											
		AFL55	AFL53	AFL5553B	B							
TT Roadster (FV9)	11/14→											
		AFL60	AFL50	AFL6050F	F							

A	B	C	D	E	F	G	H	J	K	L	M
CR1211 CR1206	CR1211 CR1203 CR1214	CR1211 CR1203 CR1214	CR1208	CR1202 CR1213	CR1209	CR1207	Special	Special	Special	Special	CR3007

AEROVANTAGE

BENTLEY												
ARNAGE (RBS_)	04/98→10/09					A60	A60			
AZURE	09/95→06/06					A55	A55			
+ Spoiler						AS55		AS5555		
BENTAYGA	10/15→									
		AFL68	AFL50		F				AF39Y	
MULSANNE (3Y_)	09/09→									
		AFL60	AFL50	AFL6050F	F					
BMW										
1 (E87)	02/03→01/13									
		AFL50	AFL50	AFL5050B	B				AF28Z	
1 (E81)	09/06→12/11									
		AFL50	AFL50	AFL5050B	B				AF28Z	
1 (F20)	11/10→									
		AFL55	AFL45	AFL5545B	B				AP30B	
1 (F21)	12/11→									
		AFL55	AFL45	AFL5545B	B				AP30B	
1 Convertible (E88)	03/08→12/13									
		AFL50	AFL50	AFL5050B	B					
1 Coupe (E82)	10/06→10/13									
		AFL50	AFL50	AFL5050B	B					
2 Active Tourer (F45)	11/13→									
		AFL65	AFL48	AFL6548A	A				AP30B	
2 Convertible (F23)	03/14→									
		AFL55	AFL45	AFL5545B	B					
2 Coupe (F22, F87)	10/12→									
		AFL55	AFL45	AFL5545B	B					
2 Gran Tourer (F46)	07/14→									
		AFL65	AFL48	AFL6548A	A					
3 (E46)	02/98→04/05							A6051		
3 (E90)	02/04→12/11									
→08/09		AFL60	AFL48	AFL6048E	E					
09/09→		AFL60	AFL48	AFL6048B	B					
3 (F30, F35, F80)	03/11→									
		AFL60	AFL48	AFL6048B	B					
3 Compact (E46)	03/01→02/05							A6051	A45	
3 Convertible (E46)	04/00→12/07							A6051		
3 Convertible (E93)	05/06→12/13									
→08/09		AFL60	AFL40	AFL6040E	E					
09/09→		AFL60	AFL40	AFL6040E	B					
3 Coupe (E46)	02/99→07/06							A6051		
3 Coupe (E92)	01/05→12/13									
→08/09		AFL60	AFL40	AFL6040E	E					
09/09→		AFL60	AFL40	AFL6040E	B					

A	B	C	D	E	F	G	H	J	K	L	M
CR1211 CR1206	CR1211 CR1203 CR1214	CR1211 CR1203 CR1214	CR1208	CR1202 CR1213	CR1209	CR1207	Special	Special	Special	Special	CR3007

...BMW												
3 Gran Turismo (F34)	07/12→											
		AFL60	AFL48	AFL6048B	B							
3 Touring (E36)	01/95→10/99					A53	A51			A38		
+ Spoiler						AS53						
				AFL5350L	L							
3 Touring (E46)	10/99→05/05							A6051				
3 Touring (E91)	12/04→06/12											
→08/09		AFL60	AFL48	AFL6048E	E							
09/09→		AFL60	AFL48	AFL6048B	B							
3 Touring (F31)	07/11→											
		AFL60	AFL48	AFL6048B	B							
4 Convertible (F33, F83)	10/13→											
		AFL60	AFL45	AFL6045B	B							
4 Coupe (F32, F82)	07/13→											
		AFL60	AFL45	AFL6045B	B							
4 Gran Coupe (F36)	03/14→											
		AFL60	AFL45	AFL6045B	B							
5 (E39)	09/95→06/03							A6555				
								R65C				
5 (E60)	12/01→03/10											
		AFL60	AFL58	AFU6058C	C							
5 (F10, F18)	01/09→10/16											
		AFL65	AFL45	AFL6545D	D							
5 (G30, F90)	09/16→											
		AFL65	AFL48	AFL6548A	A							
5 Gran Turismo (F07)	01/09→02/17											
		AFL65	AFL45	AFL6545D	D							
5 Touring (E39)	09/96→05/04							A6555		A45		
								R65C				
5 Touring (E61)	03/04→12/10											
		AFL60	AFL58	AFU6058C	C							
5 Touring (F11)	11/09→											
		AFL65	AFL45	AFL6545D	D							
5 Touring (G31)	03/17→											
		AFL65	AFL48	AFL6548A	A							
6 (E63)	01/04→12/10											
		AFL60	AFL58	AFU6058C	C							
6 Convertible (E64)	03/04→12/10											
		AFL60	AFL58	AFU6058C	C							
6 Convertible (F12)	03/11→											
		AFL65	AFL43		D							
6 Coupe (F13)	11/10→											
		AFL65	AFL43		D							

A	B	C	D	E	F	G	H	J	K	L	M
CR1211 CR1206	CR1211 CR1203 CR1214	CR1211 CR1203 CR1214	CR1208	CR1202 CR1213	CR1209	CR1207	Special	Special	Special	Special	CR3007

...BMW

6 Gran Coupe (F06)	09/11→										
		AFL65	AFL43		D						
7 (F01, F02, F03, F04)	02/08→12/15										
		AFL65	AFL45	AFL6545D	D						
7 (G11, G12)	10/14→										
		AFL65	AFL48	AFL6548A	A						
i3 (I01)	08/13→										
		AFL70	AFR53		E					AP28	
i8 (I12)	03/14→										
		AFL70	AFR60		E						
i8 Roadster (I15)	03/18→										
		AFL70	AFR60		E						
X1 (E84)	03/09→06/15										
		AFL60	AFL48	AFL6048B	B					AF30Z	
X1 (F48)	11/14→										
		AFL65	AFL40	AFL6540F	F					AF34Y	
X2 (F39)	11/17→										
				AFL6050M	M					AF34Y	
X3 (E83)	01/03→12/11					A55	A51			AP34	
+ Spoiler						AS55		AS5551			
				AFL5550L	L						
X3 (F25)	09/10→										
		AFL65	AFL48	AFL6548E	E					AF33X	
X4 (F26)	05/13→03/18										
		AFL65	AFL50	AFL6550A	E						
X5 (E53)	05/00→02/07					A60	A55			A45	
+ Spoiler						AS60					
				AFL6053L	L						
X5 (E70)	02/06→06/13										
→09/11		AFL60	AFL48	AFL6048E	E						
10/11→		AFL60	AFL48	AFL6048A	A						
X5 (F15, F85)	06/12→										
				AFL6050L	L					AP30B	
Hybrid Blade						AHL60	AHL50				
X6 (E71, E72)	06/07→06/14										
→09/11		AFL60	AFL48	AFL6048E	E						
10/11→		AFL60	AFL48	AFL6048A	A						
X6 (F16, F86)	08/14→										
				AFL6050L	L						
Hybrid Blade						AHL60	AHL50				
Z3 (E36)	10/95→01/03					A51	A51				
+ Spoiler						AS51					
				AFL5050L	L						

	A	B	C	D	E	F	G	H	J	K	L	M
	CR1211 CR1206	CR1211 CR1203 CR1214	CR1211 CR1203 CR1214	CR1208	CR1202 CR1213	CR1209	CR1207	Special	Special	Special	Special	CR3007

AEROVANTAGE

...BMW												
Z3 Coupe (E36)	04/97→06/03					A51	A51		A33	
+ Spoiler						AS51				
				AFL5050L	L					
Z4 (E85)	02/03→12/09					A53	A51			
+ Spoiler						AS53				
				AFL5350L	L					
Z4 Coupe (E86)	03/06→01/09					A53	A51			
+ Spoiler						AS53				
				AFL5350L	L					
Z4 ROADSTER (E89)	05/09→					A55	A51			
+ Spoiler						AS55		AS5551		
				AFL5550L	L					
Z8 (E52)	06/00→06/03					A53	A53			
+ Spoiler						AS53				
CHEVROLET										
ALERO	03/99→09/04					A55	A43			
+ Spoiler						AS55				
AVEO Hatchback (T250, T255)	06/06→					A55	A41			
				AFL5540L	L					
AVEO Hatchback (T300)	03/11→									
		AFL65	AFL38	AFL6538B	B				AP26	
AVEO Saloon (T200)	01/03→12/08									
03/06→						A55	A41			
03/06→				AFL5540L	L					
AVEO Saloon (T250, T255)	03/05→					A55	A41			
				AFL5540L	L					
AVEO Saloon (T300)	03/11→									
		AFL65	AFL38	AFL6538B	B					
BLAZER S10 ('96)	08/96→12/10					A51	A51		A36	
+ Spoiler						AS51				
CAMARO ('09)	02/09→12/15									
Hybrid Blade						AHL60	AHL50			
CAMARO Convertible ('11)	01/11→									
Hybrid Blade						AHL60	AHL50			
CAPTIVA (C100, C140)	06/06→					A60	A41		A29	
+ Spoiler						AS60				
CORVETTE ('97)	01/97→12/04					A55	A55			
+ Spoiler						AS55		AS5555		
CORVETTE (C6)	09/04→					A53	A53			
+ Spoiler						AS53				
CORVETTE Convertible	09/97→09/04					A55	A55			
+ Spoiler						AS55		AS5555		

A	B	C	D	E	F	G	H	J	K	L	M
CR1211 CR1206	CR1211 CR1203 CR1214	CR1211 CR1203 CR1214	CR1208	CR1202 CR1213	CR1209	CR1207	Special	Special	Special	Special	CR3007

BMW

CHEVROLET

...CHEVROLET

CRUZE (J300)	05/09→					A60	A45					
+ Spoiler						AS60						
CRUZE Hatchback (J305)	12/10→					A60	A45					
+ Spoiler						AS60						
EPICA (KL1_)	01/05→					A53	A51					
+ Spoiler						AS53						
EVANDA	03/05→					A55	A51					
HHR	09/05→12/11											
10/07→						A45	A45					
KALOS	03/05→					A55	A41				A38	
				AFL5540L	L							
KALOS Saloon	03/05→					A55	A41					
				AFL5540L	L							
LACETTI (J200)	03/03→					A53	A48				A45	
+ Spoiler						AS53		AS5348				
				AFL5348L	L							
LACETTI Estate (J200)	03/05→					A53	A48					
+ Spoiler						AS53		AS5348				
				AFL5348L	L							
LACETTI Saloon	03/03→03/13					A53	A48					
+ Spoiler						AS53		AS5348				
				AFL5348L	L							
MATIZ (M200, M250)	03/05→					A55	A36				AP31	
+ Spoiler						AS55						
				AFL5535L	L							
NUBIRA Estate	01/05→12/11					A55	A48					
NUBIRA Saloon	01/05→12/11					A55	A48					
ORLANDO (J309)	12/10→					A60	A48					
+ Spoiler						AS60		AS6048				
SPARK ('00)	09/00→12/04					A53	A41					
+ Spoiler						AS53						
SPARK ('05)	05/05→					A55	A36					
SPARK (M300) ('09)	12/09→					A60	A36					
+ Spoiler						AS60						
				AFL6035L	L							
TACUMA	03/05→					A60	A48				A38	
TAHOE (B2W)	12/99→12/06					A58	A58				A41	
TRAILBLAZER (KC_)	09/01→12/09					A55	A55				A41	
+ Spoiler						AS55		AS5555				
				AFL5540L	L							
TRANS SPORT	08/96→09/05					A60	A60				A41	
+ Spoiler						AS60						

A	B	C	D	E	F	G	H	J	K	L	M
CR1211 CR1206	CR1211 CR1203 CR1214	CR1211 CR1203 CR1214	CR1208	CR1202 CR1213	CR1209	CR1207	Special	Special	Special	Special	CR3007

AEROVANTAGE

...CHEVROLET												
TRAX	12/12→											
		AFL65	AFL35	AFL6535A	A							
VOLT	04/11→											
		AFL65	AFR65	AFU6565A	A							
CHRYSLER												
300 C (LX)	09/04→					A55	A55					
+ Spoiler						AS55		AS5555				
300 C	09/10→					A55	A55					
+ Spoiler						AS55		AS5555				
300 C Touring (LX)	09/04→12/10					A55	A55					
+ Spoiler						AS55		AS5555				
300 M (LR)	07/98→09/04					A60	A55					
+ Spoiler						AS60						
CROSSFIRE	07/03→12/08					A51	A55					
+ Spoiler						AS51						
CROSSFIRE Roadster	05/04→12/08					A51	A55					
+ Spoiler						AS51						
DELTA	08/11→											
		AFL60	AFL45	AFL6045A	A						AP28	
GRAND VOYAGER V (RT)	10/07→					A65	A51				AP40	
+ Spoiler						AS65						
NEON II	08/99→12/06					A55	A48					
+ Spoiler						AS55		AS5548				
PT CRUISER (PT_)	06/00→12/10					A51	A53				A41	
+ Spoiler						AS51						
PT CRUISER Convertible	06/00→12/10					A51	A53					
+ Spoiler						AS51						
SEBRING (JR)	09/00→06/07					A55	A55					
+ Spoiler						AS55		AS5555				
SEBRING (JS)	09/06→12/10					A60	A55					
+ Spoiler						AS60						
				AFL6053L	L							
SEBRING Convertible (JR)	04/01→06/07					A55	A55					
+ Spoiler						AS55		AS5555				
SEBRING Convertible (JS)	05/07→12/10					A60	A55					
+ Spoiler						AS60						
				AFL6053L	L							
STRATUS Convertible (JX)	04/96→04/01					A55	A55					
+ Spoiler						AS55		AS5555				
VOYAGER III (GS)	01/95→03/01					A70	A70				A45	
VOYAGER IV (RG, RS)	09/99→12/08					A70	A70				A45	
YPSILON	05/11→											
		AFL60	AFL38	AFL6038A	A							

A	B	C	D	E	F	G	H	J	K	L	M
CR1211 CR1206	CR1211 CR1203 CR1214	CR1211 CR1203 CR1214	CR1208	CR1202 CR1213	CR1209	CR1207	Special	Special	Special	Special	CR3007

CHAMPION

CITROËN

BERLINGO (MF)	07/96→12/11					A55	A55		A36	2 x
+ Spoiler						AS55		AS5555	A41	→10/02 1 x
									R41	11/02→ 1 x
BERLINGO (B9)	04/08→									
		AFL65	AFL40	AFL6540A	A				AP35	
C1 (PM_, PN_)	06/05→09/14									
x 1						A65			AP29	
C1 II	04/14→									
x 1		AFL65			B				AP30A	
C2 (JM_)	09/03→					A60	A45		AP28	
+ Spoiler						AS60	AS45			
				AFL6045L	L					
C3 I (FC_)	02/02→					A60	A45		AP35	
+ Spoiler						AS60	AS45			
				AFL6045L	L					
C3 II	11/09→									
		AFL65	AFL40	AFL6540G	G				AP30	
C3 III (SX)	07/16→									
		AFL65	AFL40	AFL6540A	A				AP28	
C3 Picasso	02/09→									
→03/10		AFL60	AFL40	AFL6040A	A				AP28	
04/10→		AFL60	AFL40	AFL6040G	G					
C3 Pluriel (HB_)	05/03→					A55	A45			
+ Spoiler						AS55		AS5545		
				AFL5345L	L					
C4 AIRCROSS	08/10→					A60	A53		AP25B	
+ Spoiler						AS60				
				AFL6053L	L					
C4 Coupe (LA_)	11/04→07/11									
		AFL70	AFR60	AFU7060B	B					
C4 Grand Picasso I (UA_)	10/06→									
→03/08		AFL80	AFR75	AFL8075E	E				AP34	
04/08→		AFL80	AFR75	AFL8075E	G					
C4 Grand Picasso II	09/13→									
		AFL80	AFR75		A				AP31	
C4 I (LC_)	11/04→07/11									
		AFL70	AFR60	AFU7060B	B				AP31	
C4 II (B7)	11/09→									
		AFL75	AFR65	AFU7565A	A				AP28	

A	B	C	D	E	F	G	H	J	K	L	M
CR1211 CR1206	CR1211 CR1203 CR1214	CR1211 CR1203 CR1214	CR1208	CR1202 CR1213	CR1209	CR1207	Special	Special	Special	Special	CR3007

...CITROËN

C4 Picasso I (UD_)	10/06→10/13										
→03/08		AFL80	AFR75	AFL8075E	E					AP34	
04/08→		AFL80	AFR75	AFL8075E	G						
C4 Picasso II	02/13→										
		AFL80	AFR75		A					AP31	
C4 Saloon	07/06→										
		AFL70	AFR60	AFU7060B	B						
C5 I (DC_)	03/01→03/05										
→11/03						A65	A45			R50	→03/03
→11/03	+ Spoiler					AS65	AS45			AP40	04/03→
12/03→		AFL65	AFL48A		E						
C5 I Break (DE_)	06/01→08/04										
→11/03						A65	A45			AP28	
→11/03	+ Spoiler					AS65	AS45				
12/03→		AFL65	AFL48A		E						
C5 II (RC_)	08/04→										
		AFL65	AFL48A		E						
C5 II Break (RE_)	09/04→										
		AFL65	AFL48A		E					AP28	
C5 III (RD_)	02/08→										
		AFL70	AFR55	AFL7055B	B						
C5 III Break (TD_)	02/08→										
		AFL70	AFR55	AFL7055B	B						
C6 (TD_)	09/05→										
		AFL70	AFR70	AFU7070E	E						
C8 (EA_, EB_)	07/02→										
						AW65	AW65			AP35	
C-CROSSER (EP_)	02/07→										
				AFL6053L	L					AP30B	
Hybrid Blade						AHL60	AHL50				
C-ELYSEE	11/12→										
		AFL60	AFL40	AFL6040G	G						
C-ZERO	10/10→										
Hybrid Blade	x 1					AHL65				AP30B	
DISPATCH MPV	01/07→					A70	A51			AP35	
	+ Spoiler					AS70					
DS3	11/09→07/15										
		AFL60	AFL40	AFL6040G	G					AP28	
DS3 Convertible	01/13→07/15										
		AFL60	AFL40	AFL6040G	G						
DS4	04/11→07/15										
		AFL75	AFR65	AFU7565A	A					AP28	

A	B	C	D	E	F	G	H	J	K	L	M
CR1211 CR1206	CR1211 CR1203 CR1214	CR1211 CR1203 CR1214	CR1208	CR1202 CR1213	CR1209	CR1207	Special	Special	Special	Special	CR3007

AEROVANTAGE

...CITROËN												
DS5	11/11→07/15											
		AFL75	AFR65	AFU7565A	A				AP28			
JUMPY	04/16→											
		AFL65	AFL48	AFL6548G	G							
NEMO Estate	04/09→											
		AFL65	AFL48	AFL6548G	G							
SAXO (S0, S1)	02/96→04/04					A51	A45		A41	→08/99		
	+ Spoiler					AS51		AS5145	AP35	09/99→		
SPACETOURER	04/16→											
		AFL65	AFL48	AFL6548G	G							
XANTIA (X2)	01/98→04/03					A60	A48		A48			
	+ Spoiler					AS60		AS6048				
XANTIA Break (X1)	06/95→01/98					A60	A51		A41			
	+ Spoiler					AS60						
XANTIA Break (X2)	01/98→04/03					A60	A48		A41	→12/99		
	+ Spoiler					AS60		AS6048	AP35	01/00→		
XSARA (N1)	04/97→12/05					A55	A51		A45			
	+ Spoiler					AS55		AS5551				
XSARA Break (N2)	10/97→03/10					A55	A51		AP40			
	+ Spoiler					AS55		AS5551				
XSARA Coupe (N0)	01/98→04/05					A55	A51		A45			
	+ Spoiler					AS55		AS5551				
XSARA PICASSO (N68)	12/99→											
	→08/05					A65	A65		AP40			
	09/05→	AFL65	AFR65	AFU6565E	E							
CITROËN												
BERLINGO Box (M_)	07/96→12/11					A55	A55		A36	2 x		
	+ Spoiler					AS55		AS5555	A41	→10/02 1 x		
									R41	11/02→ 1 x		
BERLINGO Box (B9)	04/08→											
		AFL65	AFL40	AFL6540A	A				AP35			
BERLINGO Platform/Chassis (B9)	04/08→											
		AFL65	AFL40	AFL6540A	A							
C2 ENTERPRISE	04/09→					A60	A45		AP28			
	+ Spoiler					AS60	AS45					
				AFL6045L	L							
C-CROSSER ENTERPRISE	01/09→											
				AFL6053L	L				AP30B			
	Hybrid Blade					AHL60	AHL50					

	A	B	C	D	E	F	G	H	J	K	L	M
CHAMPION	CR1211 CR1206	CR1211 CR1203 CR1214	CR1211 CR1203 CR1214	CR1208	CR1202 CR1213	CR1209	CR1207	Special	Special	Special	Special	CR3007

AEROVANTAGE

...CITROËN												
DISPATCH Platform/Chassis	10/99→10/06					A65	A51			
+ Spoiler						AS65				
DISPATCH Platform/Chassis	07/11→					A70	A51			
+ Spoiler						AS70				
DISPATCH Van/Box	01/07→					A70	A51		AP35	
+ Spoiler						AS70				
DISPATCH Van/Box ('16)	04/16→									
		AFL65	AFL48	AFL6548G	G					
JUMPY Platform/Chassis	09/16→									
		AFL65	AFL48	AFL6548G	G					
NEMO Box (AA_)	02/08→									
		AFL65	AFL48	AFL6548G	G					
RELAY Bus (244, Z_)	04/02→					A55	A55		A45	
+ Spoiler						AS55		AS5555		
RELAY Bus	04/06→									
		AFL65	AFL55	AFL6555A	A					
RELAY Platform/Chassis (244)	02/02→					A55	A55			
+ Spoiler						AS55		AS5555		
RELAY Platform/Chassis	04/06→									
		AFL65	AFL55	AFL6555A	A					
RELAY Van/Box (244)	04/02→					A55	A55		A45	
+ Spoiler						AS55		AS5555		
RELAY Van/Box	04/06→									
		AFL65	AFL55	AFL6555A	A					
XSARA Box	05/98→08/05					A55	A51		AP40	
+ Spoiler						AS55		AS5551		
DACIA										
DOKKER	11/12→									
→04/15						A55	A41		AP26	
→04/15 + Spoiler						AS55		AS5541		
→04/15				AFL5540L	L					
05/15→				AFL5540M	M					
DUSTER	04/10→									
→10/14						A51	A51		AP35	
→10/14 + Spoiler						AS51				
→10/14				AFL5050L	L					
11/14→11/16						A60	A45			
11/14→11/16 + Spoiler						AS60				
11/14→11/16				AFL6045L	L					
12/16→				AFL6045M	M					
DUSTER	10/17→									
		AFL55	AFL48	AFL5548G	G				AP28	

A	B	C	D	E	F	G	H	J	K	L	M
CR1211 CR1206	CR1211 CR1203 CR1214	CR1211 CR1203 CR1214	CR1208	CR1202 CR1213	CR1209	CR1207	Special	Special	Special	Special	CR3007

CHAMPION

AEROVANTAGE

...DACIA											
LODGY	03/12→										
→04/15						A55	A41		AP28		
→04/15	+ Spoiler					AS55		AS5541			
→04/15				AFL5540L	L						
05/15→				AFL5540M	M						
LOGAN (LS_)	09/04→					A51	A51				
				AFL5050L	L						
LOGAN II	10/12→										
→02/15						A55	A51				
→02/15	+ Spoiler					AS55		AS5551			
→02/15				AFL5550L							
03/15→		AFL55	AFL48	AFL5548G	G						
LOGAN MCV (KS_)	02/07→					A51	A51		AP35		
				AFL5050L	L						
LOGAN MCV II	02/13→										
→02/15						A55	A51		AP28		
→02/15	+ Spoiler					AS55		AS5551			
→02/15				AFL5550L							
03/15→		AFL55	AFL48	AFL5548G	G						
LOGAN Pickup (US_)	03/08→					A51	A51				
				AFL5050L	L						
NOVA	04/96→03/03					A48	A48				
SANDERO	06/08→					A51	A51		AP40		
				AFL5050L	L						
SANDERO II	10/12→										
→02/15						A55	A51		AP28		
→02/15	+ Spoiler					AS55		AS5551			
→02/15				AFL5550L							
03/15→		AFL55	AFL48	AFL5548G	G						
SOLENZA (B41_)	02/03→					A48	A48				
SUPERNOVA	04/00→03/03					A48	A48				
DACIA											
DOKKER Express	12/12→										
→04/15						A55	A41		AP26		
→04/15	+ Spoiler					AS55		AS5541			
→04/15				AFL5540L	L						
05/15→				AFL5540M	M						

A	B	C	D	E	F	G	H	J	K	L	M
CR1211 CR1206	CR1211 CR1203 CR1214	CR1211 CR1203 CR1214	CR1208	CR1202 CR1213	CR1209	CR1207	Special	Special	Special	Special	CR3007

AEROVANTAGE

...DACIA											
DUSTER Box	04/11→										
→10/14							A51	A51		AP35	
→10/14 + Spoiler							AS51				
→10/14				AFL5050L	L						
11/14→11/16							A60	A45			
11/14→11/16 + Spoiler							AS60				
11/14→11/16				AFL6045L	L						
12/16→				AFL6045M	M						
LOGAN EXPRESS (FS_)	03/09→						A51	A51		AP35	
				AFL5050L	L						
DAEWOO											
ARANOS	01/95→11/97						A45	A45			
+ Spoiler							AS45		AS4545		
EVANDA (KLAL)	08/02→						A55	A51			
+ Spoiler							AS55				
KALOS (KLAS)	09/02→						A55	A41		A38	
KALOS Saloon (KLAS)	11/02→12/04						A55	A41			
KORANDO (KJ)	01/99→						A45	A41			
KORANDO Cabrio (KJ)	02/99→						A45	A41			
LACETTI Hatchback (KLAN)	02/02→						A55	A43		A45	
LANOS (KLAT)	05/97→						A48	A48		A48	
+ Spoiler							AS48		AS4848		
LANOS Saloon (KLAT)	02/97→						A48	A48			
+ Spoiler							AS48		AS4848		
LEGANZA (KLAV)	03/97→04/04						A53	A48			
+ Spoiler							AS53		AS5348		
MATIZ (KLYA)	09/98→						A53	A41		A36	
+ Spoiler							AS53				
MUSSO (FJ)	07/98→						A51	A45		A36	
+ Spoiler							AS51				
NEXIA (KLETN)	02/95→08/97						A45	A45		A45	
+ Spoiler							AS45				
NEXIA Saloon (KLETN)	02/95→06/08						A45	A45			
+ Spoiler							AS45				
NEXIA Saloon	07/08→						A45	A45			
+ Spoiler							AS45				
NUBIRA (KLAJ)	04/97→						A51	A51		A45	
+ Spoiler							AS51				
NUBIRA Saloon (KLAJ)	04/97→						A51	A51			
+ Spoiler							AS51				
NUBIRA Saloon (KLAN)	07/03→						A55	A48			
+ Spoiler							AS55				

A	B	C	D	E	F	G	H	J	K	L	M
CR1211 CR1206	CR1211 CR1203 CR1214	CR1211 CR1203 CR1214	CR1208	CR1202 CR1213	CR1209	CR1207	Special	Special	Special	Special	CR3007

CHAMPION

...DAEWOO												
NUBIRA Wagon (KLAJ)	04/97→					A51	A51		A38	
+ Spoiler						AS51				
NUBIRA Wagon (KLAN)	07/03→					A55	A48			
+ Spoiler						AS55				
REXTON (GAB_)	04/02→					A51	A51		A36	
+ Spoiler						AS51				
REZZO / TACUMA (KLAU)	06/00→					A60	A48		A38	
TICO (KLY3)	02/95→12/00					A45	A41		A36	
DAEWOO										
LUBLIN II Box	04/97→					A55	A55			
LUBLIN II Bus	04/97→					A55	A55			
LUBLIN II Platform/Chassis	04/97→					A55	A55			
DAIHATSU										
APPLAUSE II (A101)	07/97→05/00					A45+AK1	A45+AK1		A45	
CHARADE (L2_)	03/03→					A53	A29		AP30A	
CHARADE	05/11→					A60	A33		AP31	
COPEN (L880_, L881_)	03/02→09/12					A45	A41			
+ Spoiler						AS45				
CUORE V (L5)	11/96→10/98					A45	A41		A29	
+ Spoiler						AS45				
CUORE V (L7_)	10/98→05/03					A45	A38		A29	
+ Spoiler						AS45				
CUORE VI (L251, L250_, L260_)	03/03→					A53	A29		AP30A	
CUORE VII (L275_, L285_, L276_)	12/06→					A53	A29		AP30A	
GRAN MOVE (G3)	10/96→					A51	A45		A29	
+ Spoiler						AS51				
HIJET Pickup	04/98→					A41	A41			
MATERIA (M4_)	10/06→					A51	A48		AP30A	
+ Spoiler						AS51				
MOVE (L6_, L9_)	09/98→09/02					A43	A38		A29	
SIRION (M1)	04/98→04/05					A48	A45		A33	
+ Spoiler						AS48				
SIRION (M3_)	01/05→					A51	A41		AP35A	
+ Spoiler						AS51				
TERIOS (J1_)	05/97→10/06					A51	A36		A29	
+ Spoiler						AS51				
TERIOS (J2_)	11/05→					A53	A45		AP30A	
+ Spoiler						AS53				
				AFL5345L	L					
TREVIS	06/06→					A51	A41		AP30A	
+ Spoiler						AS51				

A	B	C	D	E	F	G	H	J	K	L	M
CR1211 CR1206	CR1211 CR1203 CR1214	CR1211 CR1203 CR1214	CR1208	CR1202 CR1213	CR1209	CR1207	Special	Special	Special	Special	CR3007

AEROVANTAGE

...DAIHATSU												
YRV (M2)	02/01→					A53	A36		AP30A	
+ Spoiler						AS53				
DAIHATSU										
EXTOL Box	07/00→					A48	A41		A36	
+ Spoiler						AS48				
EXTOL Bus (S22_, S23_)	07/00→11/11					A48	A41		A36	
+ Spoiler						AS48				
DODGE										
AVENGER	06/07→					A60	A55			
+ Spoiler						AS60				
				AFL6053L	L					
CALIBER	06/06→					A60	A43		A29	
+ Spoiler						AS60				
CARAVAN ('95)	01/95→03/01					A70	A70		A45	
CARAVAN ('00) (RG_)	02/00→12/07					A70	A70		A45	
CARAVAN ('08)	01/08→					A65	A51		AP40	
JOURNEY	06/08→					A60	A43		AP30A	
+ Spoiler						AS60				
NEON II	08/99→					A55	A48			
+ Spoiler						AS55		AS5548		
NITRO	09/06→12/12					A48	A48		AP29	
+ Spoiler						AS48		AS4848		
VIPER Convertible ('02)	09/02→12/10					A41	A41			
FIAT										
124 Spider (348_)	03/16→									
Hybrid Blade						AHL45	AHL48			
500 (312_)	10/07→									
		AFL60	AFL35	AFL6035A	A				AP28	
500 C (312_)	09/09→									
		AFL60	AFL35	AFL6035A	A					
500X (334_)	09/14→									
		AFL65	AFL35	AFL6535A	A				AP28	
500L (199_)	09/12→									
		AFL60	AFL38	AFL6038A	A				AP28	
BARCHETTA (183_)	03/95→05/05					A48	A48			
+ Spoiler						AS48		AS4848		
BRAVA (182_)	10/95→06/03					A58	A48			
BRAVO I (182_)	10/95→10/01					A58	A48		R33	
									A332R	
BRAVO II (198_)	11/06→									
		AFL60	AFL45	AFL6045A	A				AP28	

A	B	C	D	E	F	G	H	J	K	L	M
CR1211 CR1206	CR1211 CR1203 CR1214	CR1211 CR1203 CR1214	CR1208	CR1202 CR1213	CR1209	CR1207	Special	Special	Special	Special	CR3007

CHAMPION

...FIAT

CROMA (194_)	06/05→										
		AFL60	AFL40	AFL6040E	E				R38		
DOBLO MPV (119_, 223_)	03/01→					A55	A45		R35		
+ Spoiler						AS55		AS5545	A354R		
				AFL5345L	L						
DOBLO MPV (263_)	11/09→										
		AFL60	AFL40	AFL6040A	A				AF38Z		
FREEMONT (JC_, JF_)	08/11→					A60	A48		AP30A		
+ Spoiler						AS60		AS6048			
FULLBACK Pickup (KT_)	01/16→					A55	A45				
+ Spoiler						AS55		AS5545			
				AFL5345L	L						
GRANDE PUNTO (199_)	10/05→										
		AFL65	AFL38	AFL6538B	B				AP30		
IDEA (350_)	12/03→										
→03/08						A55	A41	A5840	R38		
→03/08 + Spoiler								AS5541	A382R		
→03/08				AFL5540L	L						
04/08→		AFL58	AFL38		A						
LINEA (323_)	06/07→										
		AFL65	AFL38	AFL6538B	B						
MAREA (185_)	09/96→12/07					A58	A48				
MAREA Weekend (185_)	09/96→12/07					A58	A48		A410R		
MULTIPLA (186_)	04/99→06/10										
→04/06						A60	A55		R35		
05/06→		AFL60	AFL55	AFL6055B	B				A350R	08/04→	
PALIO (178BX)	04/96→					A58	A45		R33		
PALIO Weekend (178_)	04/96→					A58	A45		R33		
PANDA (169_)	09/03→					A55	A41	A5840	R33		
+ Spoiler								AS5541	A338R		
				AFL5540L	L						
PANDA (312_, 319_)	02/12→										
		AFL60	AFL38	AFL6038A	A				AP28		
PUNTO (188_)	09/99→07/12					A55	A45		R35		
+ Spoiler						AS55		AS5545	A351R		
				AFL5345L	L				A352R		
PUNTO (199_)	03/12→										
		AFL65	AFL38	AFL6538B	B				AP30		
PUNTO EVO (199_)	07/08→										
		AFL65	AFL38	AFL6538B	B				AP30	10/09→	

A	B	C	D	E	F	G	H	J	K	L	M
CR1211 CR1206	CR1211 CR1203 CR1214	CR1211 CR1203 CR1214	CR1208	CR1202 CR1213	CR1209	CR1207	Special	Special	Special	Special	CR3007

...FIAT												
QUBO (225_)	02/08→											
		AFL65	AFL48	AFL6548G	G							
SCUDO (270_, 272_)	01/07→					A70	A51		AP35			
+ Spoiler						AS70						
SCUDO Combinato (220_)	02/96→12/06					A65	A51					
+ Spoiler						AS65						
SEDICI (FY_)	06/06→10/14					A65	A36		AP25B			
+ Spoiler						AS65						
				AFL6535L	L							
SEICENTO / 600 (187_)	01/98→01/10					A48	A48		R33			
+ Spoiler						AS48		AS4848	A332R			
SIENA (178_)	04/96→10/13					A58	A45					
SIENA (172_)	08/06→					A58	A45					
STILO (192_)	10/01→11/10											
→05/06						A55	A48		A353R			
→05/06 + Spoiler						AS55		AS5548				
→05/06				AFL5548L	L							
06/06→		AFL55	AFL48	AFL5548G	B							
STILO Multi Wagon (192_)	01/03→08/08											
→05/06						A55	A48		AP35			
→05/06 + Spoiler						AS55		AS5548				
→05/06				AFL5548L	L							
06/06→		AFL55	AFL48	AFL5548G	B							
STRADA Pickup (178_)	02/98→					A58	A45					
STRADA Pickup (278_)	01/09→					A58	A45					
TIPO Estate (356_)	03/16→											
		AFL65	AFL40	AFL6540A	A							
TIPO Hatchback (356_)	03/16→											
		AFL65	AFL40	AFL6540A	A							
TIPO Saloon (356_)	10/15→											
		AFL65	AFL40	AFL6540A	A							
ULYSSE (179_)	08/02→06/11											
						AW65	AW65		AP35			
UNO (146_)	08/00→12/13											
x 1						A45			R32			
									A323R			
FIAT												
BRAVO Van (198_)	03/08→06/14											
		AFL60	AFL45	AFL6045A	A				AP28			
DOBLO Box Body / Estate (263_)	02/10→											
		AFL60	AFL40	AFL6040A	A				AF38Z			

A	B	C	D	E	F	G	H	J	K	L	M
CR1211 CR1206	CR1211 CR1203 CR1214	CR1211 CR1203 CR1214	CR1208	CR1202 CR1213	CR1209	CR1207	Special	Special	Special	Special	CR3007

...FIAT

DOBLO Cargo (223_)	11/00→					A55	A45		A354R	
+ Spoiler						AS55		AS5545		
DOBLO Platform/Chassis (263_)	02/10→									
		AFL60	AFL40	AFL6040A	A					
DUCATO Box (244_)	04/02→					A55	A55			
+ Spoiler						AS55		AS5555		
DUCATO Box (250_, 290_)	07/06→									
		AFL65	AFL55	AFL6555A	A					
DUCATO Bus (244_)	04/02→					A55	A55			
+ Spoiler						AS55		AS5555		
DUCATO Bus (250_, 290_)	07/06→									
		AFL65	AFL55	AFL6555A	A					
DUCATO Platform/Chassis (244_)	04/02→					A55	A55			
+ Spoiler						AS55		AS5555		
DUCATO Platform/Chassis (250_, 290_)	07/06→									
		AFL65	AFL55	AFL6555A	A					
FIORINO Box Body / Estate (225_)	01/07→									
		AFL65	AFL48	AFL6548G	G					
GRANDE PUNTO Van (199_)	10/05→06/13									
		AFL65	AFL38	AFL6538B	B				AP30	
PANDA Van (169_)	03/04→					A55	A41	A5840		
+ Spoiler								AS5541		
				AFL5540L	L					
PANDA VAN (312_)	02/12→									
		AFL60	AFL38	AFL6038A	A				AP28	
PUNTO EVO Van (199_)	03/09→02/12									
		AFL65	AFL38	AFL6538B	B				AP30	10/09→
PUNTO Van (176_)	04/96→02/00					A58	A41	A5841	R33	
PUNTO Van (188_)	02/00→10/09					A55	A45		R35	
+ Spoiler						AS55		AS5545		
				AFL5345L	L					
PUNTO Van (199_)	02/06→									
		AFL65	AFL38	AFL6538B	B				AP30	
SCUDO Box (220_)	02/96→12/06					A65	A51			
+ Spoiler						AS65				
SCUDO Box (270_, 272_)	01/07→					A70	A51		AP35	
+ Spoiler						AS70				
SCUDO Platform/Chassis (220_)	09/96→12/06					A65	A51			
+ Spoiler						AS65				

A	B	C	D	E	F	G	H	J	K	L	M
CR1211 CR1206	CR1211 CR1203 CR1214	CR1211 CR1203 CR1214	CR1208	CR1202 CR1213	CR1209	CR1207	Special	Special	Special	Special	CR3007

AEROVANTAGE

...FIAT												
SCUDO Platform/Chassis (270_, 272_)	01/07→					A70	A51			
+ Spoiler						AS70				
SEICENTO / 600 Van (287_)	01/98→01/10					A48	A48		A332R	
+ Spoiler						AS48		AS4848		
TALENTO Box	06/16→									
		AFL65	AFL48	AFL6548A	A					
TALENTO Kombi	06/16→									
		AFL65	AFL48	AFL6548A	A					
TALENTO Multicab	06/16→									
		AFL65	AFL48	AFL6548A	A					
TALENTO Platform/Chassis	06/16→									
		AFL65	AFL48	AFL6548A	A					
FORD										
B-MAX (JK)	10/12→									
		AFL75	AFR63	AFL7563B	B				AP30	
C-MAX (DM2)	02/07→09/10									
		AFL65	AFL48	AFL6548E	E				A29	
C-MAX II (DXA/CB7, DXA/CEU)	04/10→									
		AFL75	AFR63	AFL7563B	B				AP30	
COUGAR (EC_)	08/98→12/01					A55	A51		A55	
+ Spoiler						AS55		AS5551		
				AFL5550L	L					
ECOSPORT	09/11→					A55	A41		A29	
+ Spoiler						AS55		AS5541		
ESCORT CLASSIC (AAL, ABL)	10/98→07/00					A51	A51		A51	
+ Spoiler						AS51				
ESCORT CLASSIC Turnier (ANL)	02/99→07/00					A51	A51		A36	
+ Spoiler						AS51				
ESCORT VII (GAL, AAL, ABL)	01/95→10/02					A51	A51		A51	
+ Spoiler						AS51				
ESCORT VII Convertible (ALL)	02/95→08/00					A51	A51			
+ Spoiler						AS51				
ESCORT VII Estate (GAL, ANL)	01/95→10/02					A51	A51		A36	
+ Spoiler						AS51				
ESCORT VII Saloon (GAL, AFL)	01/95→08/02					A51	A51			
+ Spoiler						AS51				
FIESTA IV (JA_, JB_)	08/95→09/02					A48	A48		A48	
+ Spoiler						AS48		AS4848		
FIESTA V (JH_, JD_)	11/01→03/10					A55	A41		A29	
+ Spoiler						AS55		AS5541		
FIESTA VI	06/08→									
		AFL65	AFL38	AFL6538A	A				AP31	

A	B	C	D	E	F	G	H	J	K	L	M
CR1211 CR1206	CR1211 CR1203 CR1214	CR1211 CR1203 CR1214	CR1208	CR1202 CR1213	CR1209	CR1207	Special	Special	Special	Special	CR3007

...FORD

FIESTA VII	01/17→										
		AFL65	AFL38	AFL6538A	A				AP31		
FIESTA Saloon	04/10→										
		AFL65	AFL38	AFL6538A	A						
FOCUS (DAW, DBW)	10/98→12/07					A55	A48		A38		
+ Spoiler						AS55		AS5548			
				AFL5548L	L						
FOCUS C-MAX	10/03→03/07										
		AFL65	AFL48	AFL6548E	E				A29		
FOCUS Estate (DNW)	02/99→12/07					A55	A48		A29		
+ Spoiler						AS55		AS5548			
				AFL5548L	L						
FOCUS II (DA_)	07/04→09/12										
		AFL65	AFL43	AFL6543E	E				A36	→01/08	
									AP34	02/08→	
FOCUS II Convertible	10/06→09/10										
		AFL65	AFL43	AFL6543E	E						
FOCUS II Estate (DA_)	07/04→09/12										
		AFL65	AFL43	AFL6543E	E				A29	→10/08	
									AP31	11/08→	
FOCUS II Saloon (DA_)	04/05→										
		AFL65	AFL43	AFL6543E	E						
FOCUS III	07/10→										
		AFL75	AFR75	AFU7575A	A				AP31		
FOCUS III Saloon	07/10→										
		AFL75	AFR75	AFU7575A	A						
FOCUS III Turnier	07/10→										
		AFL75	AFR75	AFU7575A	A				AP31		
FOCUS Saloon (DFW)	02/99→12/07					A55	A48				
+ Spoiler						AS55		AS5548			
				AFL5548L	L						
FUSION (JU_)	08/02→12/12					A55	A41		A29		
+ Spoiler						AS55		AS5541			
GALAXY (WGR)	03/95→05/06										
→08/01								A7065	A41		
09/01→		AFL70	AFR70	AFU7070E	E						
GALAXY (WA6)	05/06→06/15										
		AFL75	AFR65	AFU7565A	A				A41	→11/08	
									AP34	12/08→	
GALAXY	01/15→										
		AFL75	AFR75	AFU7575B	B						
GRAND C-MAX (DXA/CB7, DXA/CEU)	12/10→										
		AFL75	AFR63	AFL7563B	B				AP30		

A	B	C	D	E	F	G	H	J	K	L	M
CR1211 CR1206	CR1211 CR1203 CR1214	CR1211 CR1203 CR1214	CR1208	CR1202 CR1213	CR1209	CR1207	Special	Special	Special	Special	CR3007

...FORD

KA (RB_)	09/96→11/08					A48	A43		A41	
+ Spoiler						AS48				
KA	01/08→									
→10/10						A60	A36		AP28	
→10/10 + Spoiler						AS60				
→10/10				AFL6035L	L					
11/10→		AFL60	AFL35	AFL6035A	A					
KA (RU8)	10/08→									
→10/10						A60	A36		AP28	
→10/10 + Spoiler						AS60				
→10/10				AFL6035L	L					
11/10→		AFL60	AFL35	AFL6035A	A					
KA	08/14→									
		AFL55	AFL40		A					
KA + Saloon	08/14→									
		AFL55	AFL40		A					
KUGA I	03/08→									
		AFL60	AFL40	AFL6040A	A				AP34	
KUGA II (DM2)	05/12→									
		AFL70	AFR65	AFU7065B	B					
MAVERICK	02/01→					A48	A48		A29	
+ Spoiler						AS48		AS4848		
MONDEO II (BAP)	08/96→09/00					A53	A51		A55	
+ Spoiler						AS53				
				AFL5350L	L					
MONDEO II Estate (BNP)	08/96→09/00					A53	A51		A33	
+ Spoiler						AS53				
				AFL5350L	L					
MONDEO II Saloon (BFP)	08/96→09/00					A53	A51		A51	
+ Spoiler						AS53				
				AFL5350L	L					
MONDEO III (B5Y)	10/00→03/07					A55	A51		A48	
+ Spoiler						AS55		AS5551		
				AFL5550L	L					
MONDEO III Estate (BWY)	10/00→03/07					A55	A51		A29	
+ Spoiler						AS55		AS5551		
				AFL5550L	L					
MONDEO III Saloon (B4Y)	10/00→03/07					A55	A51			
+ Spoiler						AS55		AS5551		
				AFL5550L	L					
MONDEO IV (BA7)	03/07→01/15									
		AFL65	AFL48	AFL6548A	A				AFR48	

A	B	C	D	E	F	G	H	J	K	L	M
CR1211 CR1206	CR1211 CR1203 CR1214	CR1211 CR1203 CR1214	CR1208	CR1202 CR1213	CR1209	CR1207	Special	Special	Special	Special	CR3007

...FORD											
MONDEO IV Saloon (BA7)	03/07→01/15										
		AFL65	AFL48	AFL6548A	A						
MONDEO IV Turnier (BA7)	03/07→01/15										
		AFL65	AFL48	AFL6548A	A				AP31		
MONDEO V Hatchback	09/14→										
		AFL70	AFR70	AFU7070B	B						
MONDEO V Saloon	09/12→										
		AFL70	AFR70	AFU7070B	B						
MONDEO V Turnier	09/14→										
		AFL70	AFR70	AFU7070B	B						
PUMA (EC_)	03/97→06/02					A48	A48				
+ Spoiler						AS48		AS4848			
RANGER (ER, EQ)	04/97→06/06					A45	A45				
+ Spoiler						AS45		AS4545			
RANGER (ET)	01/05→07/12					A45	A45				
+ Spoiler						AS45		AS4545			
RANGER (TKE)	04/11→					A60	A41				
+ Spoiler						AS60					
S-MAX (WA6)	05/06→12/14										
		AFL75	AFR65	AFU7565A	A				A36	→01/09	
									AP34	02/09→	
S-MAX	01/15→										
		AFL75	AFR75	AFU7575B	B						
STREET KA (RL2)	03/03→07/05					A48	A43				
+ Spoiler						AS48					
TOURNEO CONNECT	06/02→12/13					A55	A51		A38	1 x	
+ Spoiler						AS55			A33	2 x	
TOURNEO CONNECT / GRAND TOURNEO CONNECT Kombi	09/13→										
		AFL75	AFR75	AFU7575B	B				AP35		
TOURNEO COURIER Kombi	02/14→										
		AFL70	AFL38	AFL7040A	B				AP35		
TRANSIT CONNECT Kombi	02/13→										
		AFL75	AFR75	AFU7575B	B				AP35		
TRANSIT COURIER Kombi	02/14→										
		AFL70	AFL38	AFL7040A	B				AP35		
FORD											
B-MAX Van	10/12→										
		AFL75	AFR63	AFL7563B	B				AP30		
C-MAX II Van	12/10→										
		AFL75	AFR63	AFL7563B	B				AP30		
ESCORT '95 Box (AVL)	01/95→06/01					A51	A51				
+ Spoiler						AS51					

A	B	C	D	E	F	G	H	J	K	L	M
CR1211 CR1206	CR1211 CR1203 CR1214	CR1211 CR1203 CR1214	CR1208	CR1202 CR1213	CR1209	CR1207	Special	Special	Special	Special	CR3007

CHAMPION

AEROVANTAGE

...FORD

FIESTA Box (J5_, J3_)	02/96→					A48	A48			
+ Spoiler						AS48		AS4848		
FIESTA Box (JV_)	05/98→08/03					A48	A48			
+ Spoiler						AS48		AS4848		
FIESTA V Van	10/03→12/10					A55	A41		A29	
+ Spoiler						AS55		AS5541		
FIESTA VI Van	01/09→									
		AFL65	AFL38	AFL6538A	A				AP31	
FOCUS III Box Body / Estate	02/12→									
		AFL75	AFR75	AFU7575A	A				AP31	
FOCUS III Box Body / Hatchback	01/11→									
		AFL75	AFR75	AFU7575A	A				AP31	
FOCUS III Van	02/12→									
		AFL75	AFR75	AFU7575A	A				AP31	
GRAND C-MAX Van	12/10→									
		AFL75	AFR63	AFL7563B	B				AP30	
KA Van (RB)	05/02→05/05					A48	A43		A38	
+ Spoiler						AS48				
KUGA II Van	05/12→									
		AFL70	AFR65	AFU7065B	B					
TOURNEO CUSTOM Bus	04/12→									
		AFL75	AFL70	AFL7570A	A				AP35	
TRANSIT Box (FA_ _)	01/00→05/06					A70	A60		A45	1 x
+ Spoiler						AS70			A41	2 x
TRANSIT Bus (FD_ _, FB_ _, FS_ _, FZ_ _, FC_ _)	01/00→05/06					A70	A60		A45	1 x
+ Spoiler						AS70			A41	2 x
TRANSIT Bus ('06)	04/06→					A70	A60		A45	1 x
+ Spoiler						AS70			A41	2 x
TRANSIT Bus ('13)	08/13→									
		AFL75	AFL50	AFL7550A	A					
TRANSIT CONNECT (P65_, P70_, P80_)	06/02→					A55	A51		A38	1 x
+ Spoiler						AS55			A33	2 x
TRANSIT CONNECT Box	02/13→									
		AFL75	AFR75	AFU7575B	B				AP35	
TRANSIT COURIER Box	02/14→									
		AFL70	AFL38	AFL7040A	B				AP35	
TRANSIT CUSTOM Box	04/12→									
		AFL75	AFR70	AFL7570A	A				AP35	
TRANSIT CUSTOM Bus	04/12→									
		AFL75	AFL70	AFL7570A	A				AP35	

A	B	C	D	E	F	G	H	J	K	L	M
CR1211 CR1206	CR1211 CR1203 CR1214	CR1211 CR1203 CR1214	CR1208	CR1202 CR1213	CR1209	CR1207	Special	Special	Special	Special	CR3007

...FORD											
TRANSIT Platform/Chassis (FM_ _, FN_ _)	01/00→05/06					A70	A60			
+ Spoiler						AS70				
TRANSIT Platform/Chassis ('06)	04/06→08/14					A70	A60			
+ Spoiler						AS70				
TRANSIT Platform/Chassis ('13)	08/13→									
		AFL75	AFL50	AFL7550A	A					
TRANSIT TOURNEO ('06)	07/06→08/14					A70	A60		A45	1 x
+ Spoiler						AS70			A41	2 x
TRANSIT Van/Box ('06)	04/06→					A70	A60		A45	1 x
+ Spoiler						AS70			A41	2 x
TRANSIT Van/Box ('13)	08/13→									
		AFL75	AFL50	AFL7550A	A					
HONDA											
ACCORD V (CE, CF)	09/95→10/98					A55	A51			
+ Spoiler						AS55		AS5551		
ACCORD VI (CG, CK)	03/97→12/03					A55	A48			
+ Spoiler						AS55		AS5548		
ACCORD VI Coupe (CG)	12/97→06/03					A55	A43			
+ Spoiler						AS55				
ACCORD VI Hatchback (CH)	12/99→12/02					A55	A48		AP40	
+ Spoiler						AS55		AS5548		
ACCORD VII (CM)	09/02→05/08					A65	A41			
+ Spoiler						AS65		AS6541		
				AFL6540L	L					
ACCORD VII (CL)	01/03→09/12					A65	A41			
+ Spoiler						AS65		AS6541		
				AFL6540L	L					
ACCORD VII Tourer (CM)	04/03→05/08					A65	A41		AP30B	
+ Spoiler						AS65		AS6541		
				AFL6540L	L					
ACCORD VIII (CP)	09/07→					A60	A55			
				AFL6053L	L					
Hybrid Blade						AHL60	AHL55			
ACCORD VIII (CU)	06/08→					A60	A55			
				AFL6053L	L					
Hybrid Blade						AHL60	AHL55			
ACCORD VIII Estate	07/08→					A60	A55		AP30B	
				AFL6053L	L					
Hybrid Blade						AHL60	AHL55			
ACCORD IX Saloon (CR)	09/12→					A65	A41			
+ Spoiler						AS65		AS6541		
				AFL6540L	L					

	A	B	C	D	E	F	G	H	J	K	L	M
	CR1211 CR1206	CR1211 CR1203 CR1214	CR1211 CR1203 CR1214	CR1208	CR1202 CR1213	CR1209	CR1207	Special	Special	Special	Special	CR3007

AEROVANTAGE

...HONDA

CIVIC VI Aerodeck (MB, MC)	04/98→02/01						A51	A45			A38	
CIVIC VI Coupe (EJ, EM1)	03/96→12/00						A51	A45				
CIVIC VI Hatchback (EJ, EK)	10/95→02/01						A51	A45			A38	
CIVIC VI Saloon (EJ, EK)	06/95→03/01						A51	A45				
CIVIC VII Coupe (EM2)	02/01→12/05						A53	A48			A29	
+ Spoiler							AS53					
				AFL5348L	L							
CIVIC VII Hatchback (EU, EP, EV)	03/99→02/06						A60	A38			AP30	
+ Spoiler							AS60					
CIVIC VII Saloon (ES)	10/00→04/06						A60	A38				
+ Spoiler							AS60					
CIVIC VIII Hatchback (FN, FK)	09/05→											
				AFL7055	L							
CIVIC VIII Saloon (FD, FA)	09/05→											
				AFL7055	L							
CIVIC IX (FK)	02/12→						A65	A45			AHL48	
				AFL6545L	L							
Hybrid Blade							AHL65	AHL45				
CIVIC IX Saloon (FB, FG)	09/11→						A65	A45				
				AFL6545L	L							
Hybrid Blade							AHL65	AHL45				
CIVIC IX Tourer (FK)	01/14→						A65	A45			AP30B	
				AFL6545L	L							
Hybrid Blade							AHL65	AHL45				
CIVIC X Hatchback (FC_, FK)	09/16→						A65	A45				
				AFL6545L	L							
Hybrid Blade							AHL65	AHL45				
CIVIC X Saloon (FC_)	09/15→						A65	A45				
				AFL6545L	L							
Hybrid Blade							AHL65	AHL45				
CR-V I (RD)	10/95→02/02						A48	A48			A29	
+ Spoiler							AS48		AS4848			
CR-V II (RD_)	09/01→12/06						A53	A51			A29	
+ Spoiler							AS53					
				AFL5350L	L							
CR-V III (RE)	06/06→						A65	A43			AP35B	
+ Spoiler							AS65					
CR-V IV (RE)	01/12→						A65	A41				
				AFL6540L	L							
Hybrid Blade							AHL65	AHL40				
CR-Z (ZF1)	06/10→						A65	A51				
Hybrid Blade							AHL65	AHL50				

A	B	C	D	E	F	G	H	J	K	L	M
CR1211 CR1206	CR1211 CR1203 CR1214	CR1211 CR1203 CR1214	CR1208	CR1202 CR1213	CR1209	CR1207	Special	Special	Special	Special	CR3007

...HONDA

ELEMENT	07/02→12/11						A51	A51				
+ Spoiler							AS51					
FR-V (BE)	08/04→						A65	A48			A29	
+ Spoiler							AS65					
HR-V (GH)	03/99→						A51	A43				
+ Spoiler							AS51					
HR-V (RU)	11/14→						A65	A45			AP25B	
				AFL6545L	L							
INSIGHT (ZE)	04/00→12/06						A51	A45			A41	
+ Spoiler							AS51		AS5145			
INSIGHT (ZE_)	04/09→											
				AFL6540L	L							
Hybrid Blade							AHL65	AHL40				
INTEGRA (DC5)	08/01→						A51	A45			A48	
+ Spoiler							AS51		AS5145			
JAZZ II (GD, GE3)	06/01→12/08						A51	A38			AP35B	
+ Spoiler							AS51					
JAZZ III (GE, GG_, GP_)	10/07→						A65	A36			AP35B	
				AFL6535L	L							
Hybrid Blade							AHL65	AHL35				
JAZZ IV (GK)	09/13→						A65	A36			AP35B	
				AFL6535L	L							
Hybrid Blade							AHL65	AHL35				
JAZZ Saloon	05/03→						A51	A36				
+ Spoiler							AS51					
LEGEND III (KA9)	02/96→						A51	A48				
+ Spoiler							AS51		AS5148			
LOGO (GA3)	03/99→03/02						A51	A43				
+ Spoiler							AS51					
NSX Convertible (NA)	03/95→09/05						A51	A51				
+ Spoiler							AS51					
ODYSSEY (RA_)	10/95→10/00						A60	A53			A43	
ODYSSEY (RB_)	09/98→						A60	A53			A43	
PILOT	09/02→07/08						A60	A55				
				AFL6053L	L							
Hybrid Blade							AHL60	AHL55				
PILOT	09/08→						A55	A55				
+ Spoiler							AS55		AS5555			
PRELUDE V (BB)	10/96→04/01						A51	A45				
+ Spoiler							AS51		AS5145			
S2000 (AP)	03/99→						A41	A51				
STREAM (RN)	05/01→						A60	A33				

A	B	C	D	E	F	G	H	J	K	L	M
CR1211 CR1206	CR1211 CR1203 CR1214	CR1211 CR1203 CR1214	CR1208	CR1202 CR1213	CR1209	CR1207	Special	Special	Special	Special	CR3007

HYUNDAI

ACCENT II (LC)	09/99→12/06					A51	A45		A45	
ACCENT II Saloon (LC)	09/99→12/06					A51	A45		A45	
ACCENT III (MC)	11/05→12/10					A55	A41		A51	→03/06
+ Spoiler						AS55		AS5541	AP35A	04/06→
				AFL5540L	L					
ACCENT III Saloon (MC)	11/05→11/10					A55	A41			
+ Spoiler						AS55		AS5541		
				AFL5540L	L					
ACCENT IV (RB)	11/10→					A65	A41			
+ Spoiler						AS65				
				AFL6540L	L					
ACCENT IV Saloon (RB)	08/10→					A65	A41			
+ Spoiler						AS65				
				AFL6540L	L					
AMICA	01/97→					A51	A41		A33	
+ Spoiler						AS51				
COUPE (RD)	06/96→04/02					A55	A45		A51	
+ Spoiler						AS55		AS5545		
				AFL5345L	L					
COUPE (GK)	01/01→11/09					A55	A45		A51	
+ Spoiler						AS55		AS5545		
				AFL5345L	L					
ELANTRA (XD)	03/00→08/06					A51	A45		A51	
ELANTRA Saloon (XD)	03/00→09/06					A51	A45			
ELANTRA Saloon (HD)	11/05→12/11					A51	A45			
ELANTRA Saloon (MD, UD)	09/10→					A65	A36			
ELANTRA Saloon (AD)	09/15→									
				AFL6540L	L					
Hybrid Blade						AHL65	AHL40			
EQUUS / CENTENNIAL ('99)	10/99→03/09					A55	A55			
EQUUS / CENTENNIAL ('09)	03/09→									
		AFL60	AFL48	AFL6048B	B					
GALLOPER II (JK-01)	02/97→12/03					A43	A43		A36	
GENESIS (BH)	01/08→12/15					A60	A48			
+ Spoiler						AS60		AS6048		
				AFL6048L	L					
GENESIS (DH)	06/14→					A65	A48			
+ Spoiler						AS65				
GENESIS Coupe	01/08→					A60	A48			
+ Spoiler						AS60		AS6048		
				AFL6048L	L					
GETZ (TB)	08/02→12/10					A55	A36		A36	
				AFL5535L	L					

A	B	C	D	E	F	G	H	J	K	L	M
CR1211 CR1206	CR1211 CR1203 CR1214	CR1211 CR1203 CR1214	CR1208	CR1202 CR1213	CR1209	CR1207	Special	Special	Special	Special	CR3007

...HYUNDAI

GRANDEUR (TG)	06/03→					A60	A51			
+ Spoiler						AS60				
				AFL6050L	L					
GRANDEUR (HG)	01/11→					A60	A51			
+ Spoiler						AS60				
				AFL6050L	L					
Hybrid Blade						AHL60	AHL50			
GRAND SANTA FÉ	01/13→									
				AFL6535L	L					
Hybrid Blade						AHL65	AHL35			
H-1 / STAREX	06/97→					A65	A51		A43	
i10 (PA)	10/07→02/16					A55	A41			
+ Spoiler						AS55				
				AFL5540L	L					
i10 (IA)	08/13→					A55	A41			
+ Spoiler						AS55				
				AFL5540L	L					
i10 Saloon	12/13→					A55	A41			
+ Spoiler						AS55				
				AFL5540L	L					
i20 (PB, PBT)	08/08→									
				AFL6040L	L				AP30A	
Hybrid Blade						AHL60	AHL40			
i20 (GB)	11/14→									
				AFL6040L	L				AP30	
Hybrid Blade						AHL60	AHL40			
i20 ACTIVE (IB, GB)	09/15→									
				AFL6040L	L				AP30	
Hybrid Blade						AHL60	AHL40			
i20 Coupe	05/15→									
				AFL6040L	L				AP30	
Hybrid Blade						AHL60	AHL40			
i30 (FD)	10/07→11/11									
→03/10		AFL60	AFL45	AFL6045A	A					
04/10→						A60	A45			
04/10→ + Spoiler						AS60				
04/10→				AFL6045L	L					
i30 (GD)	06/11→									
				AFL6535L	L					
Hybrid Blade						AHL65	AHL35			
i30 (PDE, PD)	11/16→									
				AFL6540L	L					
Hybrid Blade						AHL65	AHL40			

A	B	C	D	E	F	G	H	J	K	L	M
CR1211 CR1206	CR1211 CR1203 CR1214	CR1211 CR1203 CR1214	CR1208	CR1202 CR1213	CR1209	CR1207	Special	Special	Special	Special	CR3007

...HYUNDAI

i30 Coupe	05/13→											
				AFL6535L	L							
Hybrid Blade						AHL65	AHL35					
i30 CW (FD)	10/07→06/12											
→03/10		AFL60	AFL45	AFL6045A	A							
04/10→						A60	A45					
04/10→ + Spoiler						AS60						
04/10→				AFL6045L	L							
i30 CW (GD)	06/12→											
				AFL6535L	L							
Hybrid Blade						AHL65	AHL35					
i30 Estate (PDE)	03/17→											
				AFL6540L	L							
Hybrid Blade						AHL65	AHL40					
i30 FASTBACK (PDE)	06/17→											
				AFL6540L	L							
Hybrid Blade						AHL65	AHL40					
i40 (VF)	03/12→											
				AFL6540L	L							
Hybrid Blade						AHL65	AHL40					
i40 CW (VF)	07/11→											
				AFL6540L	L						AP35A	
Hybrid Blade						AHL65	AHL40					
ix20 (JC)	11/10→											
		AFL65	AFL35	AFL6535A	A						AP30	
ix35 (LM, EL, ELH)	08/09→					A60	A41					
+ Spoiler						AS60						
				AFL6040L	L							
ix55	09/06→											
		AFL60	AFL50	AFL6050F	A							
IONIQ	03/16→					A65	A45					
				AFL6545L	L							
Hybrid Blade						AHL65	AHL45					
KONA (OS)	06/17→											
				AFL6540L	L							
Hybrid Blade						AHL65	AHL40					
LANTRA II (J-2)	06/95→12/00					A51	A45					
+ Spoiler						AS51		AS5145				
LANTRA II Wagon (J-2)	06/95→10/00					A51	A45				A36	
+ Spoiler						AS51		AS5145				
MATRIX (FC)	06/01→08/10					A55	A41				A36	
+ Spoiler						AS55		AS5541				
				AFL5540L	L							

A	B	C	D	E	F	G	H	J	K	L	M
CR1211 CR1206	CR1211 CR1203 CR1214	CR1211 CR1203 CR1214	CR1208	CR1202 CR1213	CR1209	CR1207	Special	Special	Special	Special	CR3007

...HYUNDAI

SANTA FÉ I (SM)	11/00→03/06					A55	A51		A33	
+ Spoiler						AS55		AS5551		
				AFL5550L	L					
SANTA FÉ II (CM)	10/05→12/12					A60	A45		AP35A	
+ Spoiler						AS60				
				AFL6045L	L					
SANTA FÉ III (DM)	09/12→									
				AFL6535L	L					
Hybrid Blade						AHL65	AHL35			
SANTAMO	10/98→12/02					A55	A45		A41	
+ Spoiler						AS55		AS5545		
SONATA IV (EF)	03/98→12/05					A55	A48			
+ Spoiler						AS55		AS5548		
				AFL5548L	L					
SONATA V (NF)	12/04→11/12					A60	A48			
+ Spoiler						AS60		AS6048		
				AFL6048L	L					
SONATA VI (YF)	01/09→12/15									
				AFL6545L	L					
Hybrid Blade						AHL65	AHL45			
TERRACAN (HP)	06/01→03/08					A55	A51		A41	
+ Spoiler						AS55		AS5551		
				AFL5550L	L					
TIBURON Coupe	01/01→12/08					A55	A45			
+ Spoiler						AS55		AS5545		
TRAJET (FO)	03/00→07/08					A65	A55		A41	
+ Spoiler						AS65				
TUCSON (JM)	08/04→					A60	A41			
+ Spoiler						AS60				
				AFL6040L	L					
TUCSON (TLE)	05/15→									
				AFL6540L	L					
Hybrid Blade						AHL65	AHL40			
VELOSTER (FS)	03/11→									
				AFL6540L	L					
Hybrid Blade						AHL65	AHL40			
XG (XG)	12/98→12/05					A55	A51			
+ Spoiler						AS55		AS5551		
				AFL5550L	L					
XG Saloon	09/00→12/05					A55	A51			
+ Spoiler						AS55		AS5551		
				AFL5550L	L					

A	B	C	D	E	F	G	H	J	K	L	M
CR1211 CR1206	CR1211 CR1203 CR1214	CR1211 CR1203 CR1214	CR1208	CR1202 CR1213	CR1209	CR1207	Special	Special	Special	Special	CR3007

AEROVANTAGE

HYUNDAI												
H-1 Box	10/97→04/08					A65	A51		A43	
H-1 Platform/Chassis	06/00→10/05					A65	A51			
H100 Platform/Chassis	01/04→					A45	A45			
+ Spoiler						AS45		AS4545		
H350 Box	04/15→					A65	A60			
H350 Bus	04/15→					A65	A60			
H350 Platform/Chassis	04/15→					A65	A60			
HIGHWAY VAN	03/00→03/04					A65	A51		A41	
i800	02/08→					A60	A51		AP35A	
+ Spoiler						AS60				
				AFL6050L	L					
iLoad	02/08→					A60	A51		AP35A	
+ Spoiler						AS60				
				AFL6050L	L					
PORTER Platform/Chassis	05/04→					A45	A45			
INFINITI										
EX	09/07→					A60	A41		AP35B	
+ Spoiler						AS60				
				AFL6040L	L					
FX ('02)	09/02→12/08					A55	A51			
+ Spoiler						AS55		AS5551		
				AFL5550L	L					
FX ('08)	07/08→					A60	A48		AP35B	
+ Spoiler						AS60		AS6048		
				AFL6048L	L					
G Convertible	09/10→					A65	A41			
+ Spoiler						AS65		AS6541		
				AFL6540L	L					
G Coupe	09/07→					A65	A41			
+ Spoiler						AS65		AS6541		
				AFL6540L	L					
G Saloon ('02)	10/02→					A65	A43			
+ Spoiler						AS65				
G Saloon ('07)	01/07→					A65	A41			
+ Spoiler						AS65		AS6541		
				AFL6540L	L					
I30	01/97→					A55	A51			
+ Spoiler						AS55		AS5551		
				AFL5550L	L					
M (Y51)	03/10→					A65	A48			
+ Spoiler						AS65				
Q30	11/15→									
		AFL60	AFL48	AFL6048B	B					

A	B	C	D	E	F	G	H	J	K	L	M
CR1211 CR1206	CR1211 CR1203 CR1214	CR1211 CR1203 CR1214	CR1208	CR1202 CR1213	CR1209	CR1207	Special	Special	Special	Special	CR3007

...INFINITI											
Q50	04/13→					A65	A41			
+ Spoiler						AS65		AS6541		
				AFL6540L	L					
Q60 Convertible	10/13→					A65	A41			
+ Spoiler						AS65		AS6541		
				AFL6540L	L					
Q60 Coupe	10/13→					A65	A41			
+ Spoiler						AS65		AS6541		
				AFL6540L	L					
Q60 Coupe	09/16→					A65	A48			
+ Spoiler						AS65				
				AFL6545L	L					
Hybrid Blade						AHL65	AHL48			
Q70 (Y51)	03/13→					A65	A48		AP35B	
+ Spoiler						AS65				
				AFL6545L	L					
Hybrid Blade						AHL65	AHL48			
QX4	01/97→					A55	A51			
+ Spoiler						AS55		AS5551		
				AFL5550L	L					
QX30	04/16→									
		AFL60	AFL48	AFL6048B	B					
QX50	08/13→					A60	A45			
+ Spoiler						AS60				
				AFL6045L	L					
QX56	01/10→					A60	A55		AP25B	
+ Spoiler						AS60				
QX70	08/13→					A60	A48		AP35B	
+ Spoiler						AS60		AS6048		
				AFL6048L	L					
ISUZU										
ASCENDER	09/02→					A55	A55		A41	
D-MAX (8DH)	05/02→06/12					A55	A48			
+ Spoiler						AS55		AS5548		
D-MAX (TFR, TFS)	06/12→					A55	A48			
+ Spoiler						AS55		AS5548		
KB ('02)	07/02→					A53	A48			
RODEO Closed Off-Road Vehicle	09/97→08/04					A45	A45			
RODEO Pickup	08/06→04/07					A45	A45			
TROOPER	05/98→08/04					A51	A51		A38	
+ Spoiler						AS51				

A	B	C	D	E	F	G	H	J	K	L	M
CR1211 CR1206	CR1211 CR1203 CR1214	CR1211 CR1203 CR1214	CR1208	CR1202 CR1213	CR1209	CR1207	Special	Special	Special	Special	CR3007

AEROVANTAGE

...ISUZU												
TROOPER Open Off-Road Vehicle	04/00→08/04					A51	A51			
+ Spoiler						AS51				
ISUZU										
D-MAX Platform/Chassis (8DH)	01/07→06/12					A55	A48			
+ Spoiler						AS55		AS5548		
D-MAX Platform/Chassis	06/12→					A55	A48			
+ Spoiler						AS55		AS5548		
IVECO										
MASSIF Pickup	10/08→02/11					A45	A41			
MASSIF Station Wagon	10/08→02/11					A45	A41			
IVECO										
DAILY CITYS Bus	06/14→10/16									
		AFL63	AFL63		B					
DAILY III Box Body / Estate	11/97→10/09					A60	A60			
DAILY III Bus	05/99→05/06					A60	A60			
DAILY III Platform/Chassis	03/98→10/09					A60	A60			
DAILY IV Box Body / Estate	05/06→03/12									
						AW60	AW60	AW6060		
DAILY IV Bus	05/06→08/11									
						AW60	AW60	AW6060		
DAILY IV Dumptruck	05/06→08/11									
						AW60	AW60	AW6060		
DAILY IV Platform/Chassis	05/06→09/11									
						AW60	AW60	AW6060		
DAILY V Box Body / Estate	09/11→02/14									
						AW60	AW60	AW6060		
DAILY V Dumptruck	09/11→02/14									
						AW60	AW60	AW6060		
DAILY V Platform/Chassis	09/11→02/14									
						AW60	AW60	AW6060		
DAILY VI Box Body / Estate	03/14→									
		AFL63	AFL63		B					
DAILY VI Platform/Chassis	03/14→									
		AFL63	AFL63		B					
DAILY LINE Bus	06/14→									
		AFL63	AFL63		B					
DAILY TOURYS Bus	06/14→									
		AFL63	AFL63		B					
MASSIF Single Cab	10/08→02/11					A45	A41			

A	B	C	D	E	F	G	H	J	K	L	M
CR1211 CR1206	CR1211 CR1203 CR1214	CR1211 CR1203 CR1214	CR1208	CR1202 CR1213	CR1209	CR1207	Special	Special	Special	Special	CR3007

JAGUAR											
F-PACE (DC_)	09/15→										
		AFL65	AFL48	AFL6548A	A						
F-TYPE Convertible (QQ6_)	10/12→					A55	A53				
+ Spoiler						AS55					
F-TYPE Coupe (QQ6_)	10/13→					A55	A53				
+ Spoiler						AS55					
S-TYPE (CCX_)	01/99→12/08										
→03/02						A55	A55				
→03/02 + Spoiler						AS55		AS5555			
04/02→						AW60	AW45				
XE (JA_)	03/15→										
		AFL70	AFL43		A						
XF (CC9_)	03/08→04/15										
		AFL60	AFL48	AFL6048B	B						
XF (JB_)	05/15→										
		AFL70	AFL43		A						
XF SPORTBRAKE (CC9_)	09/12→04/14										
		AFL60	AFL48	AFL6048B	B				AP30		
XF SPORTBRAKE (X260)	07/17→										
		AFL70	AFL43		A						
XJ (NAW_, NBW_)	09/96→05/03										
x 1						A53					
XJ (N3_)	03/03→03/09										
						AW60	AW45				
XJ (NNA_)	10/09→										
		AFL60	AFL48	AFL6048B	B						
XK 8 Convertible (QDV_)	03/96→12/06					A53	A53				
XK 8 Coupe (QEV_)	03/96→12/06					A53	A53				
XK Convertible (QQ6_)	03/06→07/14					A55	A53				
+ Spoiler						AS55					
XK Coupe (QQ6_)	03/06→07/14					A55	A53				
+ Spoiler						AS55					
X-TYPE (CF1_)	03/01→11/09					A55	A48				
+ Spoiler						AS55		AS5548			
				AFL5548L	L						
X-TYPE Estate (CF1_)	09/03→12/09					A55	A48		AP34		
+ Spoiler						AS55		AS5548			
				AFL5548L	L						
JEEP											
CHEROKEE (KJ)	03/01→01/08					A48	A48		A29		
+ Spoiler						AS48		AS4848			

A	B	C	D	E	F	G	H	J	K	L	M
CR1211 CR1206	CR1211 CR1203 CR1214	CR1211 CR1203 CR1214	CR1208	CR1202 CR1213	CR1209	CR1207	Special	Special	Special	Special	CR3007

AEROVANTAGE

...JEEP												
CHEROKEE (KL)	11/13→											
				AFL6545L	L					AP35A		
Hybrid Blade						AHL65	AHL45					
COMMANDER (XK)	09/05→12/10					A45	A45					
+ Spoiler						AS45		AS4545				
COMPASS (MK49)	08/06→					A55	A51			A29		
+ Spoiler						AS55		AS5551				
GRAND CHEROKEE II (WJ, WG)	09/98→09/05					A53	A53			A29		
+ Spoiler						AS53						
				AFL5353L	L							
GRAND CHEROKEE III (WH, WK)	10/04→10/11					A53	A53			AP30A		
+ Spoiler						AS53						
				AFL5353L	L							
GRAND CHEROKEE IV (WK, WK2)	06/10→					A53	A53			AP30A		
+ Spoiler						AS53						
				AFL5353L	L							
LIBERTY	01/08→					A48	A48			A29		
+ Spoiler						AS48		AS4848				
PATRIOT (MK74)	02/07→					A55	A53					
+ Spoiler						AS55						
				AFL5353L	L							
RENEGADE Closed Off-Road Vehicle (BU)	07/14→											
		AFL55	AFL50	AFL5550A	A							
WRANGLER II (TJ)	08/96→12/08					A33	A33			A45		
WRANGLER III (JK)	04/07→					A38	A38					
KIA												
AVELLA	11/95→12/01					A51	A41					
+ Spoiler						AS51						
AVELLA Hatchback	11/95→12/01					A51	A41					
+ Spoiler						AS51						
CARENS I (FC)	06/99→10/02					A60	A48			A36		
+ Spoiler						AS60		AS6048				
				AFL6048L	L							
CARENS II (FJ)	07/02→					A60	A48			A29		
+ Spoiler						AS60		AS6048				
				AFL6048L	L							
CARENS III (UN)	09/06→					A65	A41			AP35A		
+ Spoiler						AS65		AS6541				
				AFL6540L	L							
CARENS IV	03/13→					A70	A70					
CEE`D Sportswagon (JD)	09/12→											
Hybrid Blade						AHL65	AHL35					

A	B	C	D	E	F	G	H	J	K	L	M
CR1211 CR1206	CR1211 CR1203 CR1214	CR1211 CR1203 CR1214	CR1208	CR1202 CR1213	CR1209	CR1207	Special	Special	Special	Special	CR3007

CHAMPION

...KIA

CEE'D (JD)	05/12→										
				AFL6535L	L						
Hybrid Blade						AHL65	AHL35				
CEE'D Hatchback (ED)	12/06→12/12										
→06/09		AFL60	AFL45	AFL6045A	A						
07/09→						A60	A45				
07/09→ + Spoiler						AS60					
07/09→				AFL6045L	L						
CEE'D SW (ED)	09/07→12/12										
→06/09		AFL60	AFL45	AFL6045A	A						
07/09→						A60	A45				
07/09→ + Spoiler						AS60					
07/09→				AFL6045L	L						
CERATO (LD)	03/04→					A60	A41		AP35A		
+ Spoiler						AS60					
CERATO II (TD)	01/09→					A60	A48				
+ Spoiler						AS60		AS6048			
				AFL6048L	L						
CERATO II Saloon (TD)	01/09→					A60	A48				
+ Spoiler						AS60		AS6048			
				AFL6048L	L						
CERATO KOUP (TD)	01/09→					A60	A48				
+ Spoiler						AS60		AS6048			
				AFL6048L	L						
CERATO Saloon (LD)	04/04→12/09					A60	A41				
+ Spoiler						AS60					
CLARUS (K9A)	05/96→11/01					A53	A48				
+ Spoiler						AS53		AS5348			
CLARUS Estate (GC)	05/98→					A53	A48		A38		
+ Spoiler						AS53		AS5348			
JOICE	02/00→					A55	A45		A41		
+ Spoiler						AS55		AS5545			
MAGENTIS (GD)	05/01→					A55	A51				
+ Spoiler						AS55		AS5551			
				AFL5550L	L						
MAGENTIS (MG)	10/05→					A60	A45				
+ Spoiler						AS60					
				AFL6045L	L						
MENTOR	01/95→10/97					A53	A48		A45		
+ Spoiler						AS53		AS5348			

A	B	C	D	E	F	G	H	J	K	L	M
CR1211 CR1206	CR1211 CR1203 CR1214	CR1211 CR1203 CR1214	CR1208	CR1202 CR1213	CR1209	CR1207	Special	Special	Special	Special	CR3007

AEROVANTAGE

...KIA

NIRO	09/16→						A65	A41				
+ Spoiler							AS65					
					AFL6540L	L						
Hybrid Blade							AHL65	AHL40				
OPIRUS (GH)	09/03→						A60	A45				
+ Spoiler							AS60					
					AFL6045L	L						
OPTIMA I	01/10→						A60	A45				
+ Spoiler							AS60					
					AFL6045L	L						
OPTIMA II	09/15→						A65	A45				
					AFL6545L	L						
Hybrid Blade							AHL65	AHL45				
OPTIMA Sportswagon (JF)	09/16→						A65	A45				
					AFL6545L	L						
Hybrid Blade							AHL65	AHL45				
PICANTO (BA)	04/04→						A55	A41			AP31	
+ Spoiler							AS55		AS5541			
					AFL5540L	L						
PICANTO (TA)	05/11→						A55	A41				
+ Spoiler							AS55		AS5541			
					AFL5540L	L						
PICANTO (JA)	03/17→						A60	A36				
+ Spoiler							AS60					
					AFL6035L	L						
PRIDE Estate	08/98→05/01						A45	A45			A38	
+ Spoiler							AS45		AS4545			
PRO CEE´D (JD)	03/13→											
					AFL6535L	L						
Hybrid Blade							AHL65	AHL35				
PRO CEE'D (ED)	02/08→02/13											
→06/09		AFL60	AFL45	AFL6045A	A							
07/09→							A60	A45				
07/09→ + Spoiler							AS60					
07/09→					AFL6045L	L						
RETONA (CE)	06/99→						A36	A36				
RIO Estate (DC)	07/00→02/05						A53	A45			A33	
					AFL5345L	L						
RIO II (JB)	03/05→						A55	A41			AP35A	
+ Spoiler							AS55		AS5541			
					AFL5540L	L						

A	B	C	D	E	F	G	H	J	K	L	M
CR1211 CR1206	CR1211 CR1203 CR1214	CR1211 CR1203 CR1214	CR1208	CR1202 CR1213	CR1209	CR1207	Special	Special	Special	Special	CR3007

...KIA

RIO II Saloon (JB)	03/05→					A55	A41			
+ Spoiler						AS55		AS5541		
				AFL5540L	L					
RIO III (UB)	09/11→									
				AFL6540L	L				AP28A	
Hybrid Blade						AHL65	AHL40			
RIO III Saloon (UB)	09/10→									
				AFL6540L	L					
Hybrid Blade						AHL65	AHL40			
RIO IV (YB, SC)	01/17→					A65	A41			
+ Spoiler						AS65				
				AFL6540L	L					
Hybrid Blade						AHL65	AHL40			
RIO IV Saloon (SC, FB)	07/17→					A65	A41			
+ Spoiler						AS65				
				AFL6540L	L					
Hybrid Blade						AHL65	AHL40			
RIO Saloon (DC_)	07/00→02/05					A53	A45			
				AFL5345L	L					
ROADSTER	08/99→					A55	A55			
SEDONA I	06/98→10/01					A60	A60		A45	
+ Spoiler						AS60				
SEDONA II	01/99→09/07					A60	A60		A45	
+ Spoiler						AS60				
SEDONA III	09/05→					A65	A41			
+ Spoiler						AS65		AS6541		
				AFL6540L	L					
SHUMA (FB)	09/96→12/01					A53	A48		A45	
+ Spoiler						AS53		AS5348		
				AFL5348L	L					
SHUMA II (FB)	05/01→08/04					A53	A48		A45	
+ Spoiler						AS53		AS5348		
				AFL5348L	L					
SHUMA II Saloon (FB)	05/01→05/04					A53	A48			
+ Spoiler						AS53		AS5348		
				AFL5348L	L					
SHUMA Saloon (FB)	03/96→10/01					A53	A48			
+ Spoiler						AS53		AS5348		
				AFL5348L	L					
SORENTO I (JC)	08/02→					A60	A45		A36	
+ Spoiler						AS60				
				AFL6045L	L					

A	B	C	D	E	F	G	H	J	K	L	M
CR1211 CR1206	CR1211 CR1203 CR1214	CR1211 CR1203 CR1214	CR1208	CR1202 CR1213	CR1209	CR1207	Special	Special	Special	Special	CR3007

AEROVANTAGE

...KIA												
SORENTO II (XM)	11/09→					A60	A51		AP28A	
+ Spoiler						AS60				
				AFL6050L	L					
SORENTO III (UM)	01/15→									
				AFL6540L	L					
Hybrid Blade						AHL65	AHL40			
SOUL (AM)	01/09→					A60	A51		AP28A	
+ Spoiler						AS60				
				AFL6050L	L					
SOUL II (PS)	02/14→					A60	A51		AP28A	
+ Spoiler						AS60				
				AFL6050L	L					
SPORTAGE (JE_, KM_)	09/04→					A60	A41		A33	
+ Spoiler						AS60				
				AFL6040L	L					
SPORTAGE (SL)	09/09→					A60	A45			
+ Spoiler						AS60				
				AFL6045L	L					
SPORTAGE (QL)	09/15→									
				AFL6540L	L					
Hybrid Blade						AHL65	AHL40			
STINGER (CK)	06/17→					A65	A45			
				AFL6545L	L					
Hybrid Blade						AHL65	AHL45			
STONIC (YB)	07/17→					A65	A41		AP28A	
+ Spoiler						AS65				
				AFL6540L	L					
Hybrid Blade						AHL65	AHL40			
VENGA (YN)	02/10→									
		AFL65	AFL35	AFL6535A	A				AP30	
KIA										
K2500 (SD)	06/01→					A53	A48			
+ Spoiler						AS53		AS5348		
K2700 (SD)	10/99→					A53	A45			
+ Spoiler						AS53		AS5345		
K2700	01/04→					A53	A45			
+ Spoiler						AS53		AS5345		
K2900	01/08→					A53	A48			
+ Spoiler						AS53		AS5348		
PREGIO Box (TB)	10/97→					A53	A45			
+ Spoiler						AS53		AS5345		
PREGIO Bus	08/95→09/04					A53	A45			
+ Spoiler						AS53		AS5345		

A	B	C	D	E	F	G	H	J	K	L	M
CR1211 CR1206	CR1211 CR1203 CR1214	CR1211 CR1203 CR1214	CR1208	CR1202 CR1213	CR1209	CR1207	Special	Special	Special	Special	CR3007

LADA											
110	01/95→12/12					A51	A51			
111	01/95→					A51	A51		A29	
112	01/95→12/11					A51	A51		A51	
GRANTA (2190)	10/11→					A60	A41			
+ Spoiler						AS60				
GRANTA (2349)	10/11→					A60	A41			
GRANTA Hatchback (2191)	08/14→					A60	A41			
+ Spoiler						AS60				
KALINA Estate (1117)	10/04→					A60	A41		A36	
KALINA Estate (2194)	11/13→					A60	A41		A33	
KALINA Hatchback (1119)	10/04→12/13					A60	A41		A36	
KALINA Hatchback (2192)	06/13→					A60	A41		A33	
KALINA Saloon (1118)	10/04→					A60	A41			
LARGUS Estate	03/12→					A51	A51		AP35	
+ Spoiler						AS51				
				AFL5050L	L					
NADESCHDA (2120)	12/97→12/06					A51	A51			
NIVA II (2123)	09/02→					A51	A51		A29	
PRIORA Estate (2171)	10/09→					A51	A51			
PRIORA Hatchback (2172)	12/08→					A51	A51		A51	
PRIORA Saloon (2170)	12/08→					A51	A51			
SAMARA Hatchback (2113, 2114, 2115)	03/97→12/13					A51	A51		A33	
VESTA	11/15→					A60	A45			
+ Spoiler						AS60				
				AFL6045L	L					
XRAY	02/16→									
		AFL65	AFL35	AFL6535G	G					
LADA										
LARGUS Box	03/12→					A51	A51		AP35	
+ Spoiler						AS51				
LANCIA										
DELTA III (844_)	08/08→08/14									
		AFL60	AFL45	AFL6045A	A				AP28	
FLAVIA Convertible (JS_)	03/12→12/14					A60	A55			
+ Spoiler						AS60				
				AFL6053L	L					
KAPPA Coupe (838_)	07/96→03/01					A60	A53			
+ Spoiler						AS60				
KAPPA SW (838_)	07/96→10/01					A60	A53		R33	
+ Spoiler						AS60				

A	B	C	D	E	F	G	H	J	K	L	M
CR1211 CR1206	CR1211 CR1203 CR1214	CR1211 CR1203 CR1214	CR1208	CR1202 CR1213	CR1209	CR1207	Special	Special	Special	Special	CR3007

AEROVANTAGE

...LANCIA												
LYBRA (839_)	07/99→10/05					A55	A53			
+ Spoiler						AS55				
								ASC5553		
LYBRA SW (839_)	07/99→10/05					A55	A53		R41	
+ Spoiler						AS55			A411R	
								ASC5553		
MUSA (350_)	10/04→09/12									
→09/07						A55	A41	A5840	R33	
10/07→		AFL58	AFL38		A				A338R	
PHEDRA (179_)	09/02→11/10									
						AW65	AW65		AP35	
THEMA (LX_)	09/11→									
				AFL6053L	L					
Hybrid Blade						AHL60	AHL50			
THESIS (841_)	07/02→07/09					A65	A51			
+ Spoiler						AS65				
VOYAGER MPV (RT_)	09/11→12/14					A65	A51		AP40	
+ Spoiler						AS65				
Y (840_)	11/95→09/03					A58	A41	A5841	R38	
									A380R	
YPSILON (843_)	10/03→12/11					A60	A41		R33	
+ Spoiler						AS60			A339R	
YPSILON (312_)	05/11→									
		AFL60	AFL38	AFL6038A	A					
ZETA (22_)	05/95→09/02					A65	A51		A41	
+ Spoiler						AS65				
LAND ROVER										
DEFENDER Pickup (LD_)	10/95→02/16					A33	A33			
DISCOVERY II (LT_)	10/98→08/04							A5050	AP37	
								R53		
DISCOVERY III (LA_)	07/04→09/09									
				AFU5555	L				A41	
DISCOVERY IV (LA_)	09/09→									
				AFU5555	L				A41	
DISCOVERY SPORT (LC_)	09/14→									
Hybrid Blade						AHL65	AHL50			
FREELANDER (LN_)	02/98→10/06					A55	A53		AP37	
+ Spoiler						AS55				
FREELANDER 2 (LF_)	10/06→10/14									
		AFL60	AFL48	AFL6048B	B				A36	
FREELANDER Soft Top (LN_)	02/98→10/06					A55	A53			
+ Spoiler						AS55				

A	B	C	D	E	F	G	H	J	K	L	M
CR1211 CR1206	CR1211 CR1203 CR1214	CR1211 CR1203 CR1214	CR1208	CR1202 CR1213	CR1209	CR1207	Special	Special	Special	Special	CR3007

AEROVANTAGE

...LAND ROVER											
RANGE ROVER EVOQUE (LV_)	06/11→										
		AFL60	AFL53	AFL6053A	A						
RANGE ROVER EVOQUE Convertible (LV_)	11/15→										
		AFL60	AFL53	AFL6053A	A						
RANGE ROVER III (LM_)	03/02→12/12							A6565	A45		
RANGE ROVER IV (LG_)	08/12→										
				AFL6050L					A45		
Hybrid Blade						AHL60	AHL50				
RANGE ROVER SPORT (LS_)	02/05→03/13										
				AFU5555	L				A41		
RANGE ROVER SPORT (LW_)	04/13→										
				AFL6050L					A38	→07/15	
Hybrid Blade						AHL60	AHL50		AF38Z	08/15→	
LDV											
CONVOY Box	04/96→04/09					A51	A51				
+ Spoiler						AS51					
CONVOY Bus	04/96→04/09					A51	A51				
+ Spoiler						AS51					
CONVOY Platform/Chassis	04/96→04/09					A51	A51				
+ Spoiler						AS51					
CUB	08/98→09/01					A60	A60				
MAXUS Box	02/05→12/09					A55	A55				
MAXUS Bus	02/05→12/09					A55	A55				
MAXUS Platform/Chassis	02/05→12/09					A55	A55				
PILOT Box	04/96→10/05					A38	A38				
PILOT Bus	04/96→10/05					A38	A38				
PILOT Platform/Chassis	04/96→10/05					A38	A38				
LEXUS											
CT (ZWA10_)	12/10→										
				AFL6545L	L						
Hybrid Blade						AHL65	AHL45				
ES (MCV_, VZV_)	10/96→06/08					A60	A48				
+ Spoiler						AS60					
				AFL6048L	L						
ES (_V4_)	03/06→06/12					A60	A48				
+ Spoiler						AS60					
				AFL6048L	L						
ES (_V6_)	06/12→										
				AFL6545L	L						
Hybrid Blade						AHL65	AHL45				

A	B	C	D	E	F	G	H	J	K	L	M
CR1211 CR1206	CR1211 CR1203 CR1214	CR1211 CR1203 CR1214	CR1208	CR1202 CR1213	CR1209	CR1207	Special	Special	Special	Special	CR3007

CHAMPION

...LEXUS

GS (JZS160_, UZS161_, UZS160_)	08/97→12/04						A60	A51				
+ Spoiler							AS60					
					AFL6050L	L						
GS (GRS19_, UZS19_, URS19_)	01/05→11/11											
					AFL6048L	L						
Hybrid Blade							AHL60	AHL48				
GS (GRL1_, GWL1_)	09/11→											
					AFL6545L	L						
Hybrid Blade							AHL65	AHL45				
IS C (GSE2_)	04/09→											
					AFL5550L	L						
Hybrid Blade							AHL55	AHL50				
IS I (JCE1_, GXE1_)	04/99→07/05						A55	A48				
+ Spoiler							AS55		AS5548			
					AFL5548L	L						
IS II (GSE2_, ALE2_, USE2_)	08/05→03/13											
Hybrid Blade							AHL55	AHL50				
IS III (GSE3_, AVE3_)	04/13→											
					AFL6045L	L						
Hybrid Blade							AHL60	AHL45				
IS SportCross	10/01→10/05						A55	A48			AP35A	
+ Spoiler							AS55		AS5548			
					AFL5548L	L						
LFA (LFA10_)	12/10→11/12											
Hybrid Blade x 1							AHL60					
LS (UCF30)	10/00→08/06						A60	A41				
+ Spoiler							AS60					
					AFL6040L	L						
LS (UVF4_, USF4_)	04/06→											
					AFL6048L	L						
Hybrid Blade							AHL60	AHL48				
LX (UZJ100)	09/97→03/08						A60	A53				
+ Spoiler							AS60					
					AFL6053L	L						
LX (URJ201)	08/07→											
					AFL6053L	L						
Hybrid Blade							AHL60	AHL55				
RC (AVC1_, GSC1_, USC1_)	08/14→											
					AFL6045L	L						
Hybrid Blade							AHL60	AHL45				

A	B	C	D	E	F	G	H	J	K	L	M
CR1211 CR1206	CR1211 CR1203 CR1214	CR1211 CR1203 CR1214	CR1208	CR1202 CR1213	CR1209	CR1207	Special	Special	Special	Special	CR3007

...LEXUS											
RX (MCU15)	07/00→05/03					A60	A53		A41	
+ Spoiler						AS60				
				AFL6053L	L					
RX (MHU3_, GSU3_, MCU3_)	02/03→12/08					A65	A55		AP35A	
+ Spoiler						AS65				
RX (GGL1_, GYL1_, AGL1_)	12/08→10/15									
Hybrid Blade						AHL65	AHL55		AP35A	
SC (UZZ40_)	01/01→07/10					A60	A51			
+ Spoiler						AS60				
				AFL6050L	L					
LOTUS										
ELISE ('95)	08/95→01/01					A51				
ELISE ('00)	11/00→									
01/01→						AW60				
01/01→						A65				
ELISE 340 R	02/00→02/01									
						AW60				
						A65				
EUROPA S	07/06→									
						AW60				
						A65				
EVORA	05/09→									
		AFL65	AFL65	AFL6565E	E					
EXIGE (SCC_)	05/00→06/12									
						AW60				
						A65				
EXIGE	06/12→									
						AW60				
						A65				
MAN										
TGE Box (UY_)	02/17→									
		AFL70	AFL65		F					
TGE Platform/Chassis (UZ_)	11/16→									
		AFL70	AFL65		F					
MASERATI										
3200 GT Coupe	10/98→03/02					A55	A55			
4200 GT Coupe	03/02→11/07					A55	A55			
+ Spoiler						AS55				
4200 GT SPYDER Convertible	10/01→					A55	A55			
+ Spoiler						AS55				
GHIBLI (M157)	08/13→									
		AFL65	AFL45		A					

A	B	C	D	E	F	G	H	J	K	L	M
CR1211 CR1206	CR1211 CR1203 CR1214	CR1211 CR1203 CR1214	CR1208	CR1202 CR1213	CR1209	CR1207	Special	Special	Special	Special	CR3007

CHAMPION

...MASERATI												
GRANCABRIO	03/10→					A65	A43			
+ Spoiler						AS65				
GRAN TURISMO	09/07→					A65	A43			
+ Spoiler						AS65				
LEVANTE Closed Off-Road Vehicle	06/16→									
		AFL65	AFL45		A					
QUATTROPORTE V	03/04→					A65	A45			
+ Spoiler						AS65				
QUATTROPORTE VI	11/12→									
		AFL65	AFL48	AFL6548A	A					
MAZDA												
2 (DY)	02/03→06/07					A60	A41		AP35B	
+ Spoiler						AS60				
2 (DE)	07/07→06/15					A60	A36		AP35B	
+ Spoiler						AS60				
				AFL6035L	L					
2 (DL, DJ)	11/14→					A55	A41		AP35B	
+ Spoiler						AS55		AS5541		
				AFL5540L	L					
2 Saloon (DE)	05/10→06/15					A60	A36			
+ Spoiler						AS60				
				AFL6035L	L					
2 Saloon (DL)	01/15→					A55	A41			
+ Spoiler						AS55		AS5541		
				AFL5540L	L					
3 (BK)	10/03→12/09									
		AFL53	AFL48A		E				AP34	
3 (BL)	12/08→09/14					A60	A48		AP35A	
				AFL6048L	L					
3 (BM)	09/13→									
				AFL6045L	L				AP30A	
Hybrid Blade						AHL60	AHL45			
3 Saloon (BK)	09/99→06/09									
		AFL53	AFL48A		E					
3 Saloon (BL)	12/08→					A60	A48			
				AFL6048L	L					
3 Saloon (BM)	09/13→									
				AFL6045L	L					
Hybrid Blade						AHL60	AHL45			
5 (CR19)	02/05→12/10					A65	A41		AP30A	
+ Spoiler						AS65		AS6541		
				AFL6540L	L					

A	B	C	D	E	F	G	H	J	K	L	M
CR1211 CR1206	CR1211 CR1203 CR1214	CR1211 CR1203 CR1214	CR1208	CR1202 CR1213	CR1209	CR1207	Special	Special	Special	Special	CR3007

AEROVANTAGE

...MAZDA

5 (CW)	09/10→					A65	A41		AP30A	
+ Spoiler						AS65		AS6541		
				AFL6540L	L					
6 (GG)	06/02→12/08					A55	A45			
+ Spoiler						AS55		AS5545		
6 (GH)	08/07→12/13									
				AFL6040L	L					
Hybrid Blade						AHL60	AHL40			
6 Estate (GH)	12/07→07/13									
				AFL6040L	L				AP35A	
Hybrid Blade						AHL60	AHL40			
6 Estate (GJ, GH)	12/12→									
				AFL6045L	L				AP30A	
Hybrid Blade						AHL60	AHL45			
6 Hatchback (GG)	08/02→12/08					A55	A45		A51	
+ Spoiler						AS55		AS5545		
6 Hatchback (GH)	08/07→07/13									
				AFL6040L	L				AHL50	
Hybrid Blade						AHL60	AHL40			
6 Saloon (GJ, GH)	12/12→									
				AFL6045L	L					
Hybrid Blade						AHL60	AHL45			
6 Station Wagon (GY)	08/02→12/07					A55	A45		AP30A	
+ Spoiler						AS55		AS5545		
121 III (JASM, JBSM)	03/96→04/03					A48	A48		A48	
+ Spoiler						AS48		AS4848		
323 F VI (BJ)	09/98→05/04					A53	A48		A36	
+ Spoiler						AS53		AS5348		
				AFL5348L	L					
323 P V (BA)	10/96→09/98					A53	A45		A51	
+ Spoiler						AS53		AS5345		
323 S VI (BJ)	05/98→05/04					A53	A48			
+ Spoiler						AS53		AS5348		
				AFL5348L	L					
626 V (GF)	05/97→12/02					A53	A48			
+ Spoiler						AS53		AS5348		
626 V Hatchback (GF)	05/97→12/02					A53	A48		A53	
+ Spoiler						AS53		AS5348		
626 V Station Wagon (GW)	01/98→12/02					A53	A48		A33	
+ Spoiler						AS53		AS5348		
B-SERIE (UN)	11/98→11/06					A45	A45			
+ Spoiler						AS45		AS4545		
BT-50 Pickup (CD, UN)	08/06→12/15					A45	A45			

	A	B	C	D	E	F	G	H	J	K	L	M
	CR1211 CR1206	CR1211 CR1203 CR1214	CR1211 CR1203 CR1214	CR1208	CR1202 CR1213	CR1209	CR1207	Special	Special	Special	Special	CR3007

AEROVANTAGE

...MAZDA												
BT-50 Pickup (B22, B32, UP, UR)	11/11→					A45	A45			
CX-3 (DK)	01/15→									
				AFL5345L	L				AP25B	
Hybrid Blade						AHL55	AHL45			
CX-5 (KE, GH)	11/11→									
				AFL6045L	L				AP35A	
Hybrid Blade						AHL60	AHL45			
CX-7 (ER)	06/06→12/14									
				AFL6540L	L				AP35A	
Hybrid Blade						AHL65	AHL40			
CX-9 (TB)	01/07→									
				AFL6540L	L				AP35A	
Hybrid Blade						AHL65	AHL40			
DEMIO (DW)	01/96→07/03					A51	A41		A41	
+ Spoiler						AS51				
E-SERIE MPV (SG)	06/95→10/01					A41	A41			
MPV II (LW)	08/99→02/06					A60	A60		A41	
MX-5 II (NB)	01/98→10/05					A45	A45			
+ Spoiler						AS45		AS4545		
MX-5 III (NC)	03/05→12/14					A45	A45			
+ Spoiler						AS45		AS4545		
MX-5 IV (ND)	04/15→									
Hybrid Blade						AHL45	AHL45			
MX-5 RF Targa (ND)	10/16→									
Hybrid Blade						AHL45	AHL45			
PREMACY (CP)	07/99→03/05					A60	A41		A33	
RX 8 (SE17)	10/03→06/12					A51	A45			
+ Spoiler						AS51		AS5145		
TRIBUTE (EP)	03/00→05/08					A48	A48		A29	
+ Spoiler						AS48		AS4848		
MAZDA										
B-SERIE Platform/Chassis (UN)	02/99→11/06					A45	A45			
BT-50 Platform/Chassis (CD, UN)	08/06→					A45	A45			
E-SERIE Box (SG)	01/99→12/06					A41	A41			
E-SERIE Platform/Chassis (SD1, SL)	08/99→09/04					A41	A41			
MERCEDES-BENZ										
A-CLASS (W168)	07/97→08/04									
						A65	A60		A33	
+ Spoiler						AS65	AS60			
A-CLASS (W169)	09/04→06/12									
		AFL65	AFR58	AFU6558B	B				AP30	

A	B	C	D	E	F	G	H	J	K	L	M
CR1211 CR1206	CR1211 CR1203 CR1214	CR1211 CR1203 CR1214	CR1208	CR1202 CR1213	CR1209	CR1207	Special	Special	Special	Special	CR3007

...MERCEDES-BENZ

A-CLASS (W176)	06/12→										
		AFL60	AFL48	AFL6048B	B						
AMG GT / GT S (C190)	10/14→										
		AFL50	AFL50		E						
AMG GT Roadster (R190)	11/16→										
		AFL50	AFL50		E						
B-CLASS (W245)	03/05→11/11										
		AFL65	AFR58	AFU6558B	B					AP28	
B-CLASS (W246, W242)	10/11→										
		AFL65	AFL48	AFL6548B	B						
C-CLASS (W203)	05/00→08/07										
→06/03 + Spoiler								ASC6055			
07/03→				AFL5555K	K						
C-CLASS (W204)	01/07→01/14										
→02/13		AFL60	AFL60	AFL6060E	E, D						
03/13→		AFL60	AFL60	AFL6060A	A						
C-CLASS (W205)	07/13→										
		AFL55	AFL53	AFL5553B	B						
C-CLASS Coupe (CL203)	03/01→06/11										
→06/03 + Spoiler								ASC6055			
07/03→				AFL5555K	K						
C-CLASS Coupe (C204)	01/11→										
→02/13		AFL60	AFL60	AFL6060E	E, D						
03/13→		AFL60	AFL60	AFL6060A	A						
C-CLASS Estate (S202)	06/96→03/01										
x 1						A61				A41	
C-CLASS T-Model (S203)	03/01→08/07										
→06/03 + Spoiler								ASC6055		A41	→12/03
07/03→				AFL5555K	K						
C-CLASS T-Model (S204)	08/07→08/14										
→02/13		AFL60	AFL60	AFL6060E	E, D					AP28	
03/13→		AFL60	AFL60	AFL6060A	A						
C-CLASS T-Model (S205)	09/14→										
		AFL55	AFL53	AFL5553B	B						
CITAN Combi (415)	11/12→					A55	A55			AP34	
		AFL58	AFL53	AFL5853G	G					A33	
CLA Coupe (C117)	01/13→										
		AFL60	AFL48	AFL6048B	B						
CLA Shooting Brake (X117)	01/15→										
		AFL60	AFL48	AFL6048B	B						
CLC-CLASS (CL203)	05/08→06/11										
				AFL5555K	K						
CLK (C208)	06/97→09/02					A61					

	A	B	C	D	E	F	G	H	J	K	L	M
	CR1211 CR1206	CR1211 CR1203 CR1214	CR1211 CR1203 CR1214	CR1208	CR1202 CR1213	CR1209	CR1207	Special	Special	Special	Special	CR3007

...MERCEDES-BENZ

CLK (C209)	06/02→05/09										
				AFL5555K	K						
CLK Convertible (A208)	03/98→03/02					A61					
CLK Convertible (A209)	02/03→03/10										
				AFL5555K	K						
CLS (C219)	10/04→02/11										
		AFL65	AFL65	AFL6565E	E						
CLS (C218)	01/11→										
→02/13		AFL60	AFL60	AFL6060E	E, D						
03/13→		AFL60	AFL60	AFL6060A	A						
CLS Shooting Brake (X218)	10/12→										
→02/13		AFL60	AFL60	AFL6060E	E, D					AF30Z	
03/13→		AFL60	AFL60	AFL6060A	A						
E-CLASS (W210)	06/95→08/03										
x 1						A61					
E-CLASS (W211)	03/02→03/09										
		AFL65	AFL65	AFL6565E	E						
E-CLASS (W212)	01/09→										
→02/13		AFL60	AFL60	AFL6060E	E, D						
03/13→		AFL60	AFL60	AFL6060A	A						
E-CLASS Convertible (A207)	01/10→										
→02/13		AFL60	AFL60	AFL6060E	E, D						
03/13→		AFL60	AFL60	AFL6060A	A						
E-CLASS Coupe (C207)	01/09→										
→02/13		AFL60	AFL60	AFL6060E	E, D						
03/13→		AFL60	AFL60	AFL6060A	A						
E-CLASS Estate (S210)	06/96→03/03										
x 1						A61				A41	
E-CLASS T-Model (S211)	03/03→07/09										
		AFL65	AFL65	AFL6565E	E					A41	→03/06
E-CLASS T-Model (S212)	08/09→										
→02/13		AFL60	AFL60	AFL6060E	E, D					AP30	
03/13→		AFL60	AFL60	AFL6060A	A						
GLA-CLASS (X156)	12/13→										
		AFL60	AFL48	AFL6048B	B						
GL-CLASS (X164)	09/06→										
		AFL70	AFL53		B					AP30	
GL-CLASS (X166)	07/12→										
		AFL65	AFL58		A					AP30	
GLE (W166)	04/15→										
		AFL65	AFL58		A						
GLE Coupe (C292)	03/15→										
		AFL65	AFL58		A						

A	B	C	D	E	F	G	H	J	K	L	M
CR1211 CR1206	CR1211 CR1203 CR1214	CR1211 CR1203 CR1214	CR1208	CR1202 CR1213	CR1209	CR1207	Special	Special	Special	Special	CR3007

AEROVANTAGE

...MERCEDES-BENZ

GLK-CLASS (X204)	06/08→										
→01/14		AFL55	AFL45	AFL5545E	E				AP30		
02/14→		AFL55	AFL48		A						
GLS (X166)	11/15→										
		AFL65	AFL58		A				AP30		
M-CLASS (W163)	02/98→06/05					A55	A55		A41		
+ Spoiler						AS55					
M-CLASS (W164)	07/05→12/11										
		AFL70	AFL53		B				AP30		
M-CLASS (W166)	06/11→02/15										
		AFL65	AFL58		A				AP30		
R-CLASS (W251, V251)	01/05→										
		AFL70	AFL53		B				AP30		
S-CLASS (W220)	10/98→08/05										
04/00→		AFL68	AFL68		E						
S-CLASS (W221)	09/05→12/13										
		AFL68	AFL68		E						
S-CLASS (W222, V222, X222)	05/13→										
		AFL63	AFL55		A, B						
S-CLASS Convertible (A217)	12/15→										
		AFL63	AFL55		A, B						
S-CLASS Coupe (C215)	03/99→08/06										
03/00→		AFL68	AFL68		E						
S-CLASS Coupe (C216)	05/06→12/13										
		AFL68	AFL68		E						
S-CLASS Coupe (C217)	04/14→										
		AFL63	AFL55		A, B						
SL (R230)	10/01→01/12										
		AFL65	AFL65	AFL6565E	E						
SLC (R172)	01/16→										
		AFL55	AFL55	AFL5555B	B						
SLK (R170)	04/96→04/04					A55	A55				
+ Spoiler						AS55		AS5555			
SLK (R171)	03/04→02/11										
		AFL55	AFL55	AFL5555B	B						
SLK (R172)	02/11→										
		AFL55	AFL55	AFL5555B	B						
SLR (R199)	04/04→										
		AFL65	AFL65	AFL6565E	E						
SLR ROADSTER (R199)	10/06→										
		AFL65	AFL65	AFL6565E	E						
SLS AMG (C197)	03/10→										
		AFL50	AFL50		E						

A	B	C	D	E	F	G	H	J	K	L	M
CR1211 CR1206	CR1211 CR1203 CR1214	CR1211 CR1203 CR1214	CR1208	CR1202 CR1213	CR1209	CR1207	Special	Special	Special	Special	CR3007

CHAMPION

AEROVANTAGE

...MERCEDES-BENZ											
SLS AMG Convertible (A197)	06/11→										
		AFL50	AFL50		E						
VANEO (414)	02/02→07/05										
→09/04						A65	A60		A41		
10/04→		AFL65	AFR58	AFU6558B	B						
V-CLASS (638/2)	02/96→07/03										
						AW65	AW55	AW6555	A45		
VIANO (W639)	09/03→										
→08/05	+ Spoiler							ASW7065	A41	2 x	
09/05→		AFL70	AFR65	AFU7065B	B				A36	→06/10	
									AF38Z	07/10→	
MERCEDES-BENZ											
CITAN Box (415)	11/12→					A55	A55		AP34		
		AFL58	AFL53	AFL5853G	G				A33		
CITAN Mixto (415)	11/12→					A55	A55		AP34		
		AFL58	AFL53	AFL5853G	G				A33		
SPRINTER 2-t Box (901, 902)	01/95→05/06					A60	A55				
SPRINTER 2-t Bus (901, 902)	01/95→05/06					A60	A55				
SPRINTER 2-t Platform/Chassis (901, 902)	01/95→05/06					A60	A55				
SPRINTER 3,5-t Box (906)	06/06→										
		AFL65	AFL60	AFL6560B	B				AF38Z		
SPRINTER 3,5-t Bus (906)	06/06→										
		AFL65	AFL60	AFL6560B	B				AF38Z		
SPRINTER 3,5-t Platform/Chassis (906)	06/06→										
		AFL65	AFL60	AFL6560B	B						
SPRINTER 3-t Box (903)	01/95→05/06					A60	A55				
SPRINTER 3-t Box (906)	06/06→										
		AFL65	AFL60	AFL6560B	B				AF38Z		
SPRINTER 3-t Bus (903)	01/95→05/06					A60	A55				
SPRINTER 3-t Bus (906)	06/06→										
		AFL65	AFL60	AFL6560B	B				AF38Z		
SPRINTER 3-t Platform/Chassis (903)	01/95→05/06					A60	A55				
SPRINTER 3-t Platform/Chassis (906)	06/06→										
		AFL65	AFL60	AFL6560B	B						
SPRINTER 4,6-t Box (906)	06/06→										
		AFL65	AFL60	AFL6560B	B				AF38Z		
SPRINTER 4,6-t Bus	06/06→										
		AFL65	AFL60	AFL6560B	B				AF38Z		
SPRINTER 4,6-t Platform/Chassis (906)	06/06→										
		AFL65	AFL60	AFL6560B	B						

A	B	C	D	E	F	G	H	J	K	L	M
CR1211 CR1206	CR1211 CR1203 CR1214	CR1211 CR1203 CR1214	CR1208	CR1202 CR1213	CR1209	CR1207	Special	Special	Special	Special	CR3007

...MERCEDES-BENZ											
SPRINTER 4-t Box (904)	02/96→05/06					A60	A55			
SPRINTER 4-t Bus (904)	02/96→05/06					A60	A55			
SPRINTER 4-t Platform/Chassis (904)	02/96→05/06					A60	A55			
SPRINTER 5-t Box (906)	06/06→									
		AFL65	AFL60	AFL6560B	B				AF38Z	
SPRINTER 5-t Bus	06/06→									
		AFL65	AFL60	AFL6560B	B				AF38Z	
SPRINTER 5-t Platform/Chassis (905)	04/01→05/06					A60	A55			
SPRINTER 5-t Platform/Chassis (906)	06/06→									
		AFL65	AFL60	AFL6560B	B					
SPRINTER Dumptruck (905)	04/01→					A60	A55			
VARIO Box Body / Estate	09/96→					A60	A60			
VARIO Bus	09/96→					A60	A60			
VARIO Cab with engine	09/96→					A60	A60			
VARIO Dumptruck	09/96→					A60	A60			
VARIO Platform/Chassis	09/96→					A60	A60			
VITO Box (638)	03/97→07/03									
						AW65	AW55	AW6555	A45	
VITO Bus (638)	02/96→07/03									
						AW65	AW55	AW6555	A45	
VITO Bus (W639)	09/03→									
→08/05 + Spoiler								ASW7065	A41	2 x
09/05→		AFL70	AFR65	AFU7065B	B				A36	→06/10
									AF38Z	07/10→
VITO / MIXTO Box (W639)	09/03→									
→08/05 + Spoiler								ASW7065	A41	2 x
09/05→		AFL70	AFR65	AFU7065B	B				A36	→06/10
									AF38Z	07/10→
MG										
MG 3	04/11→					A55	A43		A36	
+ Spoiler						AS55				
MG 6 Hatchback	11/10→									
		AFL60	AFL45		B					
MG 6 Saloon	11/10→									
		AFL60	AFL45		B					
MGF (RD)	03/95→03/02					A51	A51			
+ Spoiler						AS51				
MG TF	03/02→12/09					A51	A51			
MG X-POWER	01/03→04/08					A55	A55			
+ Spoiler						AS55		AS5555		

A	B	C	D	E	F	G	H	J	K	L	M
CR1211 CR1206	CR1211 CR1203 CR1214	CR1211 CR1203 CR1214	CR1208	CR1202 CR1213	CR1209	CR1207	Special	Special	Special	Special	CR3007

AEROVANTAGE

...MG												
MG ZR	06/01→04/05						A45	A45		A45	→09/04
+ Spoiler							AS45		AS4545	AP40	10/04→
MG ZS	07/01→04/05						A51	A45			
+ Spoiler							AS51		AS5145		
MG ZS Hatchback	07/01→10/05						A51	A45		A45	
+ Spoiler							AS51		AS5145		
MG ZT	06/01→07/05						A55	A55			
+ Spoiler							AS55		AS5555		
MG ZT- T	10/01→07/05						A55	A55			
+ Spoiler							AS55		AS5555		
MG												
EXPRESS Box	03/03→05/05						A45	A45		A45	→09/04
+ Spoiler							AS45		AS4545	AP40	10/04→
MINI												
MINI (R50, R53)	06/01→09/06						A45	A48		AP28	
+ Spoiler							AS45		AS4548		
MINI (R56)	11/05→11/13						A45	A48		AP28	
+ Spoiler							AS45		AS4548		
MINI (F56)	04/13→						A45	A48			
+ Spoiler							AS45		AS4548		
Hybrid Blade							AHL45	AHL48			
MINI (F55)	09/13→						A45	A48			
+ Spoiler							AS45		AS4548		
Hybrid Blade							AHL45	AHL48			
MINI CLUBMAN (R55)	10/06→06/14										
→04/12							A45	A48		AF28Z	2 x
→04/12 + Spoiler							AS45		AS4548		
05/12→		AFL45	AFL48		G						
MINI CLUBMAN (F54)	11/14→										
		AFL55	AFL50	AFL5550A	A					AP25B	
MINI Convertible (R52)	07/04→11/07						A45	A48			
+ Spoiler							AS45		AS4548		
MINI Convertible (R57)	10/07→06/15						A45	A48			
+ Spoiler							AS45		AS4548		
MINI Convertible (F57)	11/14→						A45	A48			
+ Spoiler							AS45		AS4548		
Hybrid Blade							AHL45	AHL48			
MINI COUNTRYMAN (R60)	01/10→10/16										
		AFL48	AFL50	AFL4850B	B					AP28	
MINI COUNTRYMAN (F60)	10/16→										
				AFL5853M	M						
MINI Coupe (R58)	12/10→05/15										
		AFL48	AFL50	AFL4850B	B						

A	B	C	D	E	F	G	H	J	K	L	M
CR1211 CR1206	CR1211 CR1203 CR1214	CR1211 CR1203 CR1214	CR1208	CR1202 CR1213	CR1209	CR1207	Special	Special	Special	Special	CR3007

...MINI											
MINI PACEMAN (R61)	03/12→09/16										
		AFL48	AFL50	AFL4850B	B						
MINI Roadster (R59)	01/11→04/15										
		AFL48	AFL50	AFL4850B	B						
MINI											
MINI CLUBVAN (R55)	12/12→06/14										
		AFL45	AFL48		G				AF28Z	2 x	
MITSUBISHI											
ASX (GA_W_)	01/10→										
				AFL6053L	L				AP25B		
Hybrid Blade						AHL60	AHL50				
CARISMA (DA_)	07/95→06/06					A53	A51		A51	→02/99	
+ Spoiler						AS53			A55	03/99→	
				AFL5350L	L						
CARISMA Saloon (DA_)	09/96→06/06					A53	A51				
+ Spoiler						AS53					
				AFL5350L	L						
COLT CZC Convertible (RG)	05/06→07/09					A65	A29				
+ Spoiler						AS65					
COLT V (CJ_, CP_)	09/95→09/03										
→09/00						A53	A48		A36		
→09/00 + Spoiler						AS53		AS5348			
→09/00				AFL5348L	L						
09/00→						A53	A51				
09/00→ + Spoiler						AS53					
09/00→				AFL5350L	L						
COLT VI (Z3_A, Z2_A)	10/02→12/12					A65	A29		AP34		
+ Spoiler						AS65					
GALANT VI (EA_)	09/96→10/04					A55	A45				
+ Spoiler						AS55		AS5545			
				AFL5345L	L						
GALANT VI Estate (EA_)	09/96→10/03					A55	A45		A41		
+ Spoiler						AS55		AS5545			
				AFL5345L	L						
GALANT Saloon (DJ_, ED_, EF_)	10/03→					A65	A45				
+ Spoiler						AS65					
GALLOPER (JK-01)	09/98→12/03					A43	A43				
GRANDIS (NA_W)	03/03→12/11										
→12/08							A55		AP30B		
→12/08						T70H01					
01/09→						A70	A55				

A	B	C	D	E	F	G	H	J	K	L	M
CR1211 CR1206	CR1211 CR1203 CR1214	CR1211 CR1203 CR1214	CR1208	CR1202 CR1213	CR1209	CR1207	Special	Special	Special	Special	CR3007

...MITSUBISHI

i (HA_)	01/06→											
x 1						A70			AP30B			
L 200 (K7_T, K6_T)	01/96→12/07					A48	A48					
L 200 (KB_T, KA_T)	01/04→12/15											
→10/09						A53	A48					
→10/09				AFL5348L	L							
11/09→						A53	A45					
11/09→				AFL5345L	L							
L 200 / TRITON (KJ_, KK_, KL_)	11/14→					A53	A45					
				AFL5345L	L							
LANCER Estate (CS_W)	09/03→12/08					A60	A45		AP35B			
+ Spoiler						AS60						
				AFL6045L	L							
LANCER VI (CJ-CP_)	09/95→08/03					A53	A48					
+ Spoiler						AS53		AS5348				
				AFL5348L	L							
LANCER Saloon (CS_A, CT0)	03/00→12/13					A60	A45					
+ Spoiler						AS60						
				AFL6045L	L							
LANCER Saloon (CY/Z_A)	03/07→					A60	A45					
+ Spoiler						AS60						
				AFL6045L	L							
LANCER SPORTBACK (CX_A)	10/07→					A60	A45		AP35B			
+ Spoiler						AS60						
				AFL6045L	L							
MIRAGE Hatchback (CJ_A)	09/95→07/03					A53	A48					
+ Spoiler						AS53		AS5348				
				AFL5348L	L							
MIRAGE Saloon (CK_A)	09/95→07/03					A53	A48		A36			
+ Spoiler						AS53		AS5348				
				AFL5348L	L							
MIRAGE Saloon (A10_)	07/13→					A55	A36					
+ Spoiler						AS55						
				AFL5535L	L							
MIRAGE / SPACE STAR Hatchback (A0_A, A05A, LA)	01/12→					A55	A36		AP30A			
+ Spoiler						AS55						
				AFL5535L	L							
OUTLANDER I (CU_W)	03/01→12/06					A55	A45		AP30B			
+ Spoiler						AS55		AS5545				
OUTLANDER II (CW_W)	11/06→12/12											
				AFL6053L	L				AP35A			
Hybrid Blade						AHL60	AHL50					

A	B	C	D	E	F	G	H	J	K	L	M
CR1211 CR1206	CR1211 CR1203 CR1214	CR1211 CR1203 CR1214	CR1208	CR1202 CR1213	CR1209	CR1207	Special	Special	Special	Special	CR3007

AEROVANTAGE

...MITSUBISHI											
OUTLANDER III (GG_W, GF_W, ZJ)	08/12→										
				AFL6545L	L					AP30B	
Hybrid Blade						AHL65	AHL45				
PAJERO / SHOGUN (III) (V7_W, V6_W)	01/99→01/07					A51	A51			A41	
+ Spoiler						AS51					
				AFL5050L	L						
PAJERO / SHOGUN (IV) (V8_W, V9_W)	11/06→					A55	A51			AP35B	
+ Spoiler						AS55					
				AFL5550L	L						
PAJERO / SHOGUN CLASSIC (V2_W)	07/01→					A51	A51			A41	
+ Spoiler						AS51					
PAJERO / SHOGUN PININ (H6_W, H7_W)	03/99→06/07					A45	A48			A38	
+ Spoiler						AS45					
PAJERO / SHOGUN Soft Top (III)	04/00→12/06					A51	A51				
+ Spoiler						AS51					
				AFL5050L	L						
PAJERO / SHOGUN SPORT I (K90)	07/96→					A51	A51			A33	
+ Spoiler						AS51					
				AFL5050L	L						
SANTAMO	03/99→12/04					A55	A45			A41	
+ Spoiler						AS55		AS5545			
SPACE RUNNER (N6_W)	08/99→01/03					A55	A45			A41	
+ Spoiler						AS55		AS5545			
SPACE STAR Hatchback (A0_A)	05/12→					A55	A36			AP30A	
+ Spoiler						AS55					
				AFL5535L	L						
SPACE STAR MPV (DG_A)	06/98→12/04					A53	A45			A33	
				AFL5345L	L						
SPACE WAGON (N9_W, N8_W)	10/98→12/04					A65	A41			A38	
+ Spoiler						AS65					
MITSUBISHI											
ASX Van (GA_W_)	06/10→										
				AFL6053L	L					AP25B	
Hybrid Blade						AHL60	AHL50				
CANTER Platform/Chassis (FB_, FE_, FG_)	08/01→					A51	A51				
L 200 Platform/Chassis (K6_T, K7_T)	01/96→12/06					A48	A48				

	A	B	C	D	E	F	G	H	J	K	L	M
	CR1211 CR1206	CR1211 CR1203 CR1214	CR1211 CR1203 CR1214	CR1208	CR1202 CR1213	CR1209	CR1207	Special	Special	Special	Special	CR3007

AEROVANTAGE

...MITSUBISHI												
OUTLANDER II Van (CW_W)	12/06→11/12										AP35A	
				AFL6053L	L							
Hybrid Blade						AHL60	AHL50					
OUTLANDER III Van (GF_W, GG_W)	04/13→										AP30B	
				AFL6545L	L							
Hybrid Blade						AHL65	AHL45					
PAJERO / SHOGUN Box (IV) (V90, V80)	11/06→					A55	A51				AP35B	
+ Spoiler						AS55						
				AFL5550L	L							
NISSAN												
350 Z Coupe (Z33)	09/02→11/09					A51	A45				A45	
+ Spoiler						AS51		AS5145				
350 Z Roadster (Z33)	10/03→12/09					A51	A45					
+ Spoiler						AS51		AS5145				
370 Z Coupe (Z34)	01/09→											
				AFL6048L	L							
Hybrid Blade						AHL60	AHL48					
370 Z Roadster (Z34)	01/09→											
				AFL6048L	L							
Hybrid Blade						AHL60	AHL48					
ALMERA I (N15)	07/95→07/00					A53	A48					
+ Spoiler						AS53		AS5348				
				AFL5348L	L							
ALMERA I Hatchback (N15)	07/95→01/01					A53	A48				A36	
+ Spoiler						AS53		AS5348				
				AFL5348L	L							
ALMERA II (N16)	06/00→					A53	A41					
+ Spoiler						AS53						
ALMERA II Hatchback (N16)	01/00→					A53	A41				A36	→09/02
+ Spoiler						AS53					AP35	10/02→
ALMERA TINO (V10)	12/98→02/06					A65	A45				A51	
+ Spoiler						AS65						
				AFL6545L	L							
ALTIMA II	08/01→04/07					A65	A43					
+ Spoiler						AS65						
ALTIMA III	10/06→07/13					A65	A41					
+ Spoiler						AS65						
CUBE (Z11)	01/03→09/05					A51	A51					
+ Spoiler						AS51						
				AFL5050L	L							

A	B	C	D	E	F	G	H	J	K	L	M
CR1211 CR1206	CR1211 CR1203 CR1214	CR1211 CR1203 CR1214	CR1208	CR1202 CR1213	CR1209	CR1207	Special	Special	Special	Special	CR3007

...NISSAN

CUBE (Z12)	09/07→					A51	A51		AP30B	
+ Spoiler						AS51				
				AFL5050L	L					
GT-R (R35)	12/07→									
Hybrid Blade						AHL45	AHL45			
JUKE (F15)	06/10→					A55	A36		AP30	
				AFL5535L	L					
KUBISTAR (X76)	08/03→10/09					A51	A51		AP40	
+ Spoiler						AS51				
				AFL5050L	L					
LEAF (ZE0)	11/10→					A65	A38		AP25B	
				AFL6535L	L					
Hybrid Blade						AHL65	AHL35			
MAXIMA / MAXIMA QX IV Station Wagon (A32)	10/97→12/00					A55	A53			
MAXIMA / MAXIMA QX V (A33)	04/99→11/03					A65	A43			
+ Spoiler						AS65				
MICRA C+C III (K12)	08/05→					A53	A45			
+ Spoiler						AS53		AS5345		
				AFL5345L	L					
MICRA III (K12)	03/02→06/10					A53	A45		AP30	
+ Spoiler						AS53		AS5345		
				AFL5345L	L					
MICRA IV (K13)	05/10→					A53	A36		AP30B	
+ Spoiler						AS53				
MICRA V (K14)	12/16→					A65	A36		AP23	
				AFL6535L	L					
Hybrid Blade						AHL65	AHL35			
MURANO I (Z50)	08/03→09/08					A65	A45		AP35B	
				AFL6545L	L					
Hybrid Blade						AHL65	AHL45			
MURANO II (Z51)	10/07→09/14					A65	A41		AP35B	
				AFL6540L	L					
Hybrid Blade						AHL65	AHL40			
MURANO III (Z52)	10/14→					A65	A45		AP30B	
				AFL6545L	L					
Hybrid Blade						AHL65	AHL45			
NAVARA (D22_)	01/97→					A48	A48			
NOTE (E11)	01/05→06/12					A60	A36		AP30B	
+ Spoiler						AS60				
				AFL6035L	L					
NOTE (E12)	09/12→									
Hybrid Blade						AHL60	AHL35		AP30B	

A	B	C	D	E	F	G	H	J	K	L	M
CR1211 CR1206	CR1211 CR1203 CR1214	CR1211 CR1203 CR1214	CR1208	CR1202 CR1213	CR1209	CR1207	Special	Special	Special	Special	CR3007

CHAMPION

...NISSAN

NP300 NAVARA (D40)	10/04→					A60	A48			
+ Spoiler						AS60				
				AFL6048L	L					
NP300 NAVARA Pickup (D23)	07/14→									
				AFL6040L	L					
PATHFINDER II (R50)	09/95→07/05					A55	A53		A29	
+ Spoiler						AS55				
PATHFINDER III (R51)	01/05→					A60	A48		AP30B	
+ Spoiler						AS60				
				AFL6048L	L					
PATHFINDER IV (R52)	09/12→					A60	A48			
+ Spoiler						AS60				
				AFL6048L	L					
PATROL GR V Wagon (Y61)	06/97→					A48	A51		A36	
+ Spoiler						AS48				
PICK UP III (D22)	01/97→					A48	A48			
+ Spoiler						AS48		AS4848		
PICKUP / NP300 PICKUP III (D22)	04/08→					A48	A48			
PIXO (UA0)	03/09→					A55	A36			
+ Spoiler						AS55				
				AFL5535L	L					
PRIMERA (P11)	06/96→12/01					A53	A51			
+ Spoiler						AS53				
				AFL5350L	L					
PRIMERA (P12)	01/02→					A65	A48			
PRIMERA Estate (WP12)	01/02→					A65	A48		AP40	
PRIMERA Hatchback (P11)	06/96→07/02					A53	A51		A53	
+ Spoiler						AS53				
				AFL5350L	L					
PRIMERA Hatchback (P12)	01/02→					A65	A48		R50	06/03→
PRIMERA Traveller (WP11)	06/96→01/02					A53	A51		A41	
+ Spoiler						AS53				
				AFL5350L	L					
PULSAR Hatchback (C13)	08/12→									
		AFL65	AFL35	AFL6535A	A					
QASHQAI II (J11, J11_)	11/13→									
				AFL6540L	L				AP30	
Hybrid Blade						AHL65	AHL40			
QASHQAI / QASHQAI +2 I (J10, JJ10)	12/06→12/13									
		AFL60	AFL38	AFL6038A	B				AP31	
SERENA (C24)	06/99→12/13					A60	A60			

A	B	C	D	E	F	G	H	J	K	L	M
CR1211 CR1206	CR1211 CR1203 CR1214	CR1211 CR1203 CR1214	CR1208	CR1202 CR1213	CR1209	CR1207	Special	Special	Special	Special	CR3007

...NISSAN											
SKYLINE (R34)	01/98→08/02					A51	A51			
+ Spoiler						AS51				
SKYLINE Coupe (R34)	01/98→02/08					A51	A51			
+ Spoiler						AS51				
SKYLINE Coupe (V35)	01/01→12/07					A51	A51			
+ Spoiler						AS51				
TEANA I (J31)	02/03→09/08									
				AFL6048L	L					
Hybrid Blade						AHL60	AHL48			
TIIDA Hatchback	05/04→12/13					A60	A36		AP35A	
+ Spoiler						AS60				
				AFL6035L	L					
TIIDA Hatchback (C11X)	02/06→12/11					A60	A36		AP35A	
+ Spoiler						AS60				
				AFL6035L	L					
TIIDA Saloon (SC11X)	05/04→12/13					A60	A36			
+ Spoiler						AS60				
				AFL6035L	L					
TITAN	10/03→					A60	A55			
+ Spoiler						AS60				
X-TRAIL (T30)	06/01→01/13					A60	A41		A43	
+ Spoiler						AS60				
				AFL6040L	L					
X-TRAIL (T31)	03/07→07/14					A60	A41		AP35B	
+ Spoiler						AS60				
				AFL6040L	L					
X-TRAIL (T32_)	10/13→									
				AFL6540L	L				AP30	
Hybrid Blade						AHL65	AHL40			
NISSAN										
CABSTAR Platform/Chassis (F24_)	09/06→12/13					A51	A51			
INTERSTAR Box (X70)	04/02→									
→04/06						A60	A60			
→04/06 + Spoiler						AS60				
05/06→						AW60	AW60	AW6060		
INTERSTAR Bus (X70)	04/02→									
→04/06						A60	A60			
→04/06 + Spoiler						AS60				
05/06→						AW60	AW60	AW6060		

	A	B	C	D	E	F	G	H	J	K	L	M
	CR1211 CR1206	CR1211 CR1203 CR1214	CR1211 CR1203 CR1214	CR1208	CR1202 CR1213	CR1209	CR1207	Special	Special	Special	Special	CR3007

AEROVANTAGE

...NISSAN												
INTERSTAR Platform/Chassis	08/03→											
→04/06							A60	A60				
→04/06 + Spoiler							AS60					
05/06→							AW60	AW60	AW6060			
KUBISTAR Box (X80)	08/03→						A51	A51		AP40		
+ Spoiler							AS51					
				AFL5050L	L							
NAVARA Platform/Chassis (D22)	03/97→						A48	A48				
NAVARA Platform/Chassis (D23)	01/15→											
				AFL6040L	L							
NP300 NAVARA Platform/Chassis (D40)	08/08→						A60	A48				
				AFL6048L	L							
NV200 Box	02/10→						A55	A41		AP35B		
NV200 / EVALIA Bus	07/10→						A55	A41		AP35B		
NV300 Box (X82)	09/16→											
		AFL65	AFL48	AFL6548A	A							
NV300 Kombi (X82)	09/16→											
		AFL65	AFL48	AFL6548A	A							
NV300 Platform/Chassis (X82)	09/16→											
		AFL65	AFL48	AFL6548A	A							
NV400 Box	11/11→						A65	A65				
NV400 Bus	11/11→						A65	A65				
NV400 Platform/Chassis	11/11→						A65	A65				
PATROL V Platform/Chassis	05/98→						A51	A51				
+ Spoiler							AS51					
PRIMASTAR Box (X83)	09/02→						A60	A53		AP40		
+ Spoiler							AS60					
PRIMASTAR Bus (X83)	03/01→						A60	A53		AP40		
+ Spoiler							AS60					
PRIMASTAR Platform/Chassis	07/02→08/06						A60	A53				
+ Spoiler							AS60					
TERRANO II Van (R20)	06/98→09/07						A53	A51		A29		
+ Spoiler							AS53					
TRADE Box Body / Estate	01/96→12/00						A51	A51				
TRADE Bus	06/96→10/01						A51	A51				
TRADE III Platform/Chassis	06/96→09/04						A51	A51				
TRADE III Van	06/96→10/01						A51	A51				
OPEL												
ADAM	10/12→											
		AFL65	AFL40	AFL6540A	A					AP34		

A	B	C	D	E	F	G	H	J	K	L	M
CR1211 CR1206	CR1211 CR1203 CR1214	CR1211 CR1203 CR1214	CR1208	CR1202 CR1213	CR1209	CR1207	Special	Special	Special	Special	CR3007

NISSAN

OPEL

...OPEL

AGILA (A) (H00)	09/00→12/07					A51	A45		A33	
+ Spoiler						AS51		AS5145		
AGILA (B) (H08)	04/08→					A55	A41		AP25B	
+ Spoiler						AS55		AS5541		
				AFL5540L	L					
AMPERA	11/11→									
		AFL65	AFR65	AFU6565A	A					
ANTARA	05/06→					A60	A41			
+ Spoiler						AS60				
ASTRA CLASSIC Estate (A04)	01/09→									
		AFL55	AFL45	AFL5545E	E				AP28	
ASTRA CLASSIC Hatchback (A04)	01/09→									
		AFL55	AFL45	AFL5545E	E				AP28	
ASTRA CLASSIC Saloon (A04)	01/09→									
		AFL55	AFL45	AFL5545E	E				AP28	
ASTRA F CLASSIC Estate	01/98→01/05					A45	A45		A41	
+ Spoiler						AS45		AS4545		
ASTRA F CLASSIC Hatchback	01/98→08/02					A45	A45		A45	
+ Spoiler						AS45		AS4545		
ASTRA F CLASSIC Saloon	01/98→08/02					A45	A45			
+ Spoiler						AS45		AS4545		
ASTRA G CLASSIC Caravan (F35)	03/04→07/09					A51	A48		AP28	
+ Spoiler						AS51		AS5148		
ASTRA G CLASSIC Saloon (T98)	03/04→07/09					A51	A48		AP40	
+ Spoiler						AS51		AS5148		
ASTRA G Convertible (F67)	03/01→10/05					A51	A48			
+ Spoiler						AS51		AS5148		
ASTRA G Coupe (F07_)	03/00→05/05					A51	A48			
+ Spoiler						AS51		AS5148		
ASTRA G Estate (F35_)	02/98→12/09					A51	A48		AP28	
+ Spoiler						AS51		AS5148		
ASTRA G Hatchback (F48_, F08_)	02/98→12/09					A51	A48		AP40	
+ Spoiler						AS51		AS5148		
ASTRA G Saloon (F69_)	09/98→12/09					A51	A48		AP40	
+ Spoiler						AS51		AS5148		
ASTRA GTC J	10/11→									
		AFL68	AFR63	AFL6863A	A				AP30C	
ASTRA H (L48)	01/04→05/14									
		AFL55	AFL45	AFL5545E	E				AP28	
ASTRA H Estate (L35)	08/04→05/14									
		AFL55	AFL45	AFL5545E	E				AP28	
ASTRA H GTC (L08)	03/05→10/10									
		AFL55	AFL45	AFL5545E	E				AP23	

A	B	C	D	E	F	G	H	J	K	L	M
CR1211 CR1206	CR1211 CR1203 CR1214	CR1211 CR1203 CR1214	CR1208	CR1202 CR1213	CR1209	CR1207	Special	Special	Special	Special	CR3007

...OPEL

ASTRA H Saloon (L69)	02/07→05/14											
		AFL55	AFL45	AFL5545E	E							
ASTRA H TwinTop (L67)	09/05→10/10											
		AFL55	AFL45	AFL5545E	E							
ASTRA J	12/09→											
		AFL68	AFR63	AFL6863A	A						AP30C	
ASTRA J Saloon	06/12→											
		AFL68	AFR63	AFL6863A	A							
ASTRA J Sports Tourer	10/10→											
		AFL68	AFR63	AFL6863A	A						AP30C	
ASTRA K	06/15→											
		AFL70	AFR60	AFL7060A	A							
ASTRA K Sports Tourer	11/15→											
		AFL70	AFR60	AFL7060A	A							
CASCADA (W13)	03/13→											
		AFL68	AFR63	AFL6863A	A							
COMBO Tour	10/01→					A51	A43				AP40	1 x
+ Spoiler						AS51					A36	2 x
COMBO Tour (X12)	02/12→											
		AFL60	AFL40	AFL6040A	A						AF38Z	
CORSA B Estate (F35)	01/99→12/02					A45	A45				A41	
+ Spoiler						AS45		AS4545				
CORSA C (F08, F68)	09/00→12/09					A51	A45				AP40	
+ Spoiler						AS51		AS5145				
CORSA D	07/06→											
		AFL65	AFL40	AFL6540B	B						AP30	
CORSA E	09/14→											
		AFL65	AFL40	AFL6540B	B						AP31	
CROSSLAND X (P17)	03/17→											
		AFL65	AFL40	AFL6540F	F						AP23	
FRONTERA B (6B_)	10/98→09/02					A48	A48				A33	
+ Spoiler						AS48		AS4848				
GRANDLAND X (A18)	06/17→											
		AFL70	AFL48		A						AP28	
GT Convertible	06/07→12/11					A41	A55					
				AFL5540L	L							
INSIGNIA	07/08→											
				AFL6045L	L						AFR50	
Hybrid Blade						AHL60	AHL45					
INSIGNIA A Country Tourer (G09)	07/08→03/17											
				AFL6045L	L						AP30	
Hybrid Blade						AHL60	AHL45					

A	B	C	D	E	F	G	H	J	K	L	M
CR1211 CR1206	CR1211 CR1203 CR1214	CR1211 CR1203 CR1214	CR1208	CR1202 CR1213	CR1209	CR1207	Special	Special	Special	Special	CR3007

...OPEL

INSIGNIA B Country Tourer (Z18)	06/17→										
				AFL6050L	L						
Hybrid Blade						AHL60	AHL50				
INSIGNIA B Grand Sport (Z18)	03/17→										
				AFL6050L	L						
Hybrid Blade						AHL60	AHL50				
INSIGNIA B Sports Tourer (Z18)	03/17→										
				AFL6050L	L						
Hybrid Blade						AHL60	AHL50				
INSIGNIA Estate	07/08→03/17										
				AFL6045L	L					AP30	
Hybrid Blade						AHL60	AHL45				
INSIGNIA Saloon	07/08→										
				AFL6045L	L						
Hybrid Blade						AHL60	AHL45				
KARL	01/15→					A60	A36				
MERIVA	05/03→05/10					A60	A60			AP40	
MERIVA B	06/10→										
		AFL68	AFR58	AFL6858A	A					AP40	
MOKKA	06/12→										
		AFL65	AFL35	AFL6535A	A						
MONTEREY B	07/98→08/99					A51	A51			A38	
+ Spoiler						AS51					
SIGNUM	05/03→12/08					A60	A48			AP38	
+ Spoiler						AS60		AS6048			
				AFL6048L	L						
SINTRA	11/96→04/99					A61	A61			A43	
SPEEDSTER	09/00→										
x 1						A60					
TIGRA TwinTop	06/04→					A51	A45				
+ Spoiler						AS51		AS5145			
VECTRA B (36_)	09/95→04/02					A48	A48				
+ Spoiler						AS48		AS4848			
VECTRA B Estate (31_)	11/96→07/03					A48	A48			A33	
+ Spoiler						AS48		AS4848			
VECTRA B Hatchback (38_)	10/95→07/03					A48	A48			A48	
+ Spoiler						AS48		AS4848			
VECTRA C	04/02→					A60	A48			AP40	→07/05
+ Spoiler						AS60		AS6048			
				AFL6048L	L						
VECTRA C Estate	10/03→					A60	A48			AP38	
+ Spoiler						AS60		AS6048			
				AFL6048L	L						

A	B	C	D	E	F	G	H	J	K	L	M
CR1211 CR1206	CR1211 CR1203 CR1214	CR1211 CR1203 CR1214	CR1208	CR1202 CR1213	CR1209	CR1207	Special	Special	Special	Special	CR3007

CHAMPION

...OPEL											
VECTRA C GTS	08/02→					A60	A48		AP40	→07/05
+ Spoiler						AS60		AS6048		
				AFL6048L	L					
ZAFIRA A (F75_)	04/99→06/05									
						A60	A60		AP40	
ZAFIRA B (A05)	07/05→									
		AFL70	AFR55	AFL7055B	B				AP35	
ZAFIRA TOURER C (P12)	10/11→									
		AFL80	AFR70	AFL8070A	A				AP35C	
OPEL										
ARENA Box	01/97→12/01					A51	A51			
+ Spoiler						AS51				
ARENA Box (TB, TF)	03/98→08/01					A51	A51			
+ Spoiler						AS51				
ARENA Bus	01/97→12/01					A51	A51			
+ Spoiler						AS51				
ARENA Combi (THB)	03/98→08/01					A51	A51			
+ Spoiler						AS51				
ASTRA G Box (F70)	01/99→04/05					A51	A48		AP28	
+ Spoiler						AS51		AS5148		
ASTRA H Box (L70)	02/04→12/13									
		AFL55	AFL45	AFL5545E	E				AP28	
COMBO Box Body / Estate	10/01→					A51	A43		AP40	1 x
+ Spoiler						AS51			A36	2 x
COMBO Box Body / Estate (X12)	02/12→									
		AFL60	AFL40	AFL6040A	A				AF38Z	
COMBO Platform/Chassis	08/12→									
		AFL60	AFL40	AFL6040A	A					
CORSA B Box (73_)	08/99→09/00					A45	A45			
+ Spoiler						AS45		AS4545		
CORSA C Box (F08, W5L)	09/00→					A51	A45		AP40	
+ Spoiler						AS51		AS5145		
CORSA D Van	07/06→									
		AFL65	AFL40	AFL6540B	B				AP30	
CORSA E Van	09/14→									
		AFL65	AFL40	AFL6540B	B				AP31	
MOVANO B Box	05/10→					A65	A65			
MOVANO B Bus	12/10→					A65	A65			
MOVANO Box (F9)	01/99→									
						AW60	AW60	AW60		
MOVANO B Platform/Chassis	05/10→					A65	A65			

A	B	C	D	E	F	G	H	J	K	L	M
CR1211 CR1206	CR1211 CR1203 CR1214	CR1211 CR1203 CR1214	CR1208	CR1202 CR1213	CR1209	CR1207	Special	Special	Special	Special	CR3007

...OPEL											
MOVANO Combi (J9)	07/98→										
						AW60	AW60	AW6060			
MOVANO Dumptruck (H9)	01/99→										
						AW60	AW60	AW6060			
MOVANO Platform/Chassis (U9, E9)	07/98→										
						AW60	AW60	AW6060			
VIVARO Box (F7)	08/01→					A60	A53		AP40	1 x	
	+ Spoiler					AS60			A36	2 x	
VIVARO Box	06/14→										
		AFL65	AFL48	AFL6548A	A				AP40	2 x	
VIVARO Combi (J7)	08/01→					A60	A53		AP40	1 x	
	+ Spoiler					AS60			A36	2 x	
VIVARO Combi	06/14→										
		AFL65	AFL48	AFL6548A	A				AP40	2 x	
VIVARO Platform/Chassis (E7)	08/01→					A60	A53				
	+ Spoiler					AS60					
VIVARO Platform/Chassis	06/14→										
		AFL65	AFL48	AFL6548A	A						
ZAFIRA B Van	07/05→										
		AFL70	AFR55	AFL7055B	B				AP35		
PEUGEOT											
106 II (1)	04/96→05/05					A51	A45		A41	→08/99	
	+ Spoiler					AS51		AS5145	AP35	09/99→	
107	06/05→										
	x 1					A65			AP29		
108	05/14→										
	x 1	AFL65			B				AP30A		
206+ (T3E)	01/09→					A65	A41		AP35		
	+ Spoiler					AS65		AS6541			
				AFL6540L	L						
206 CC (2D)	09/00→					A65	A41				
	+ Spoiler					AS65		AS6541			
				AFL6540L	L						
206 Hatchback (2A/C)	08/98→					A65	A41		AP35		
	+ Spoiler					AS65		AS6541			
				AFL6540L	L						
206 Saloon	03/07→					A65	A41				
	+ Spoiler					AS65		AS6541			
				AFL6540L	L						
206 SW (2E/K)	07/02→					A65	A41		AP34		
	+ Spoiler					AS65		AS6541			
				AFL6540L	L						

A	B	C	D	E	F	G	H	J	K	L	M
CR1211 CR1206	CR1211 CR1203 CR1214	CR1211 CR1203 CR1214	CR1208	CR1202 CR1213	CR1209	CR1207	Special	Special	Special	Special	CR3007

CHAMPION

...PEUGEOT

207 (WA_, WC_)	02/06→											
		AFL65	AFL43	AFL6543E	E					AP40D		
207 CC (WD_)	02/07→											
		AFL65	AFL43	AFL6543E	E							
207 Saloon	12/07→											
		AFL65	AFL43	AFL6543E	E							
207 SW (WK_)	02/07→											
		AFL65	AFL43	AFL6543E	E					AP30		
208	03/12→											
		AFL65	AFL40	AFL6540A	A					AP35		
301	11/12→											
		AFL60	AFL40	AFL6040G	G							
307 (3A/C)	08/00→											
→09/04						A70	A65			AP35		
→09/04	+ Spoiler					AS70	AS65					
10/04→		AFL70	AFR65	AFU7065B	B							
307 Break (3E)	03/02→12/09											
→09/04						A70	A65			AP35		
→09/04	+ Spoiler					AS70	AS65					
10/04→		AFL70	AFR65	AFU7065B	B							
307 CC (3B)	10/03→											
		AFL70	AFR60	AFU7060B	B							
307 SW (3H)	03/02→12/09											
→09/04						A70	A65			AP35		
→09/04	+ Spoiler					AS70	AS65					
10/04→		AFL70	AFR65	AFU7065B	B							
308 (4A_, 4C_)	09/07→											
		AFL75	AFR65	AFU7565A	A					AP30		
308 CC	02/09→											
		AFL75	AFR65	AFU7565A	A							
308 II	09/13→											
		AFL60	AFL45	AFL6045A	A					AP23		
308 SW	09/07→											
		AFL75	AFR65	AFU7565A	A					AP28		
308 SW II	03/14→											
		AFL60	AFL45	AFL6045A	A					AP31		
406 (8B)	10/95→01/05					A60	A55			A45		
	+ Spoiler					AS60						
				AFL6053L	L							
406 Break (8E/F)	10/96→10/04					A60	A55			AP34		
	+ Spoiler					AS60						
				AFL6053L	L							

A	B	C	D	E	F	G	H	J	K	L	M
CR1211 CR1206	CR1211 CR1203 CR1214	CR1211 CR1203 CR1214	CR1208	CR1202 CR1213	CR1209	CR1207	Special	Special	Special	Special	CR3007

...PEUGEOT

406 Coupe (8C)	03/97→02/05					A65	A51			
+ Spoiler						AS65				
407 (6D_)	05/04→									
		AFL70	AFR70	AFU7070E	E				AP28	
407 Coupe (6C_)	10/05→									
		AFL70	AFR70	AFU7070E	E					
407 SW (6E_)	05/04→									
		AFL70	AFR70	AFU7070E	E				AP28	
508	11/10→									
		AFL65	AFR65	AFU6565A	A					
508 SW	11/10→									
		AFL65	AFR65	AFU6565A	A				AP30	
607 (9D, 9U)	01/00→									
								R65D		
807 (E)	06/02→									
						AW65	AW65		AP35	
1007 (KM_)	04/05→					A60	A45		AP30	
+ Spoiler						AS60				
2008	03/13→									
		AFL65	AFL40	AFL6540A	A				AP28	
3008	06/09→12/16									
		AFL80	AFR70	AFL8070A	A				AP30	
3008 SUV (M_)	05/16→									
		AFL70	AFL40	AFL7040A	F				AP31	
4007 (GP_)	02/07→									
				AFL6053L	L				AP30B	
Hybrid Blade						AHL60	AHL50			
4008	05/12→					A60	A53		AP25B	
+ Spoiler						AS60				
				AFL6053L	L					
5008	06/09→									
		AFL80	AFR70	AFL8070A	A				AP28	
5008 II	12/16→									
		AFL70	AFL40	AFL7040A	F				AP31	
BIPPER Tepee	04/08→									
		AFL65	AFL48	AFL6548G	G					
EXPERT (224)	10/95→12/06					A65	A51		A41	1 x
+ Spoiler						AS65			A36	2 x
EXPERT Tepee (VF3V_)	01/07→					A70	A51		AP35	
+ Spoiler						AS70				
ION	11/10→									
Hybrid Blade x 1						AHL65			AP30B	

	A	B	C	D	E	F	G	H	J	K	L	M
	CR1211 CR1206	CR1211 CR1203 CR1214	CR1211 CR1203 CR1214	CR1208	CR1202 CR1213	CR1209	CR1207	Special	Special	Special	Special	CR3007

CHAMPION

AEROVANTAGE

...PEUGEOT												
PARTNER Combispace (5F)	05/96→12/15					A55	A55		A41	1 x
+ Spoiler						AS55		AS5555	A36	2 x
PARTNER Tepee	04/08→									
		AFL65	AFL40	AFL6540A	A				AP35	
RCZ	03/10→									
		AFL65	AFR65	AFU6565A	A					
PEUGEOT										
206 Van	04/99→03/09					A65	A41			
+ Spoiler						AS65		AS6541		
207 Van	04/07→									
		AFL65	AFL43	AFL6543E	E				AP40D	
208 Box	10/12→									
		AFL65	AFL40	AFL6540A	A				AP35	
BIPPER (AA_)	02/08→									
		AFL65	AFL48	AFL6548G	G					
BOXER Box (244)	12/01→					A55	A55			
BOXER Box	04/06→									
		AFL65	AFL55	AFL6555A	A					
BOXER Bus (244, Z_)	12/01→					A55	A55			
BOXER Bus	09/05→									
		AFL65	AFL55	AFL6555A	A					
BOXER Platform/Chassis (244)	12/01→					A55	A55			
BOXER Platform/Chassis	04/06→									
		AFL65	AFL55	AFL6555A	A					
EXPERT Box (222)	07/95→12/06					A65	A51			
+ Spoiler						AS65				
EXPERT Box (VF3A_, VF3U_, VF3X_)	01/07→					A70	A51		AP35	
+ Spoiler						AS70				
EXPERT Box	04/16→									
		AFL65	AFL48	AFL6548G	G					
EXPERT Platform/Chassis (223)	12/95→12/06					A65	A51			
+ Spoiler						AS65				
EXPERT Platform/Chassis	01/07→					A70	A51			
+ Spoiler						AS70				
EXPERT Platform/Chassis	09/16→									
		AFL65	AFL48	AFL6548G	G					
PARTNER Box (5)	04/96→12/15					A55	A55		A41	1 x
+ Spoiler						AS55		AS5555	A36	2 x
PARTNER Box	04/08→									
		AFL65	AFL40	AFL6540A	A				AP35	
PARTNER Platform/Chassis	01/99→07/08					A55	A55			
+ Spoiler						AS55		AS5555		

A	B	C	D	E	F	G	H	J	K	L	M
CR1211 CR1206	CR1211 CR1203 CR1214	CR1211 CR1203 CR1214	CR1208	CR1202 CR1213	CR1209	CR1207	Special	Special	Special	Special	CR3007

CHAMPION

...PEUGEOT											
PARTNER Platform/Chassis	01/09→										
		AFL65	AFL40	AFL6540A	A						
TRAVELLER	04/16→										
		AFL65	AFL48	AFL6548G	G						
PORSCHE											
718 BOXSTER (982)	04/16→										
		AFL53	AFL58		F						
718 CAYMAN (982)	04/16→										
		AFL53	AFL58		F						
911 (996)	09/97→08/05					A55	A53		A55		
+ Spoiler						AS55					
								ASC5553			
911 (997)	07/04→12/12					A55	A53				
+ Spoiler						AS55					
								ASC5553			
911 (991)	12/11→										
		AFL53	AFL58		F						
911 Convertible (996)	02/98→08/05					A55	A53				
+ Spoiler						AS55					
								ASC5553			
911 Convertible (997)	04/05→12/12					A55	A53				
+ Spoiler						AS55					
								ASC5553			
911 Convertible (991)	03/12→										
		AFL53	AFL58		F						
911 Targa (996)	12/01→08/05					A55	A53		A55		
+ Spoiler						AS55					
								ASC5553			
911 Targa (997)	07/06→12/12					A55	A53				
+ Spoiler						AS55					
								ASC5553			
911 Targa (991)	05/14→										
		AFL53	AFL58		F						
BOXSTER (986)	09/96→12/04					A55	A53				
+ Spoiler						AS55					
								ASC5553			
BOXSTER (987)	11/04→12/11					A55	A53				
+ Spoiler						AS55					
								ASC5553			
BOXSTER (981)	04/12→										
		AFL53	AFL58		F						

A	B	C	D	E	F	G	H	J	K	L	M
CR1211 CR1206	CR1211 CR1203 CR1214	CR1211 CR1203 CR1214	CR1208	CR1202 CR1213	CR1209	CR1207	Special	Special	Special	Special	CR3007

AEROVANTAGE

...PORSCHE												
BOXSTER Spyder (987)	09/07→12/11					A55	A53			
+ Spoiler						AS55				
								ASC5553		
BOXSTER Spyder (981)	07/15→									
		AFL53	AFL58		F					
CARRERA GT (980)	07/03→12/06					A55	A55		A55	
+ Spoiler						AS55				
CAYENNE (9PA)	09/02→09/10									
		AFL65	AFL65	AFL6565E	E					
CAYENNE (92A)	06/10→									
		AFL65	AFL65	AFL6565E	E				AF34Y	
CAYMAN (987)	11/05→12/13					A55	A53			
+ Spoiler						AS55				
								ASC5553		
CAYMAN (981)	03/13→									
		AFL53	AFL58		F					
MACAN (95B)	02/14→									
		AFL60	AFL50	AFL6050F	F				AF38Z	
PANAMERA (970)	03/09→10/16					A60	A55			
+ Spoiler						AS60				
PANAMERA (971)	11/16→									
		AFL63	AFL50		F					
PANAMERA Sport Turismo (971)	03/17→									
		AFL63	AFL50		F					
PROTON										
GEN 2 (CM_)	06/04→					A55	A43			
+ Spoiler						AS55				
GEN-2 PERSONA	01/07→07/16					A55	A45			
+ Spoiler						AS55				
IMPIAN	09/01→					A51	A43			
+ Spoiler						AS51				
JUMBUCK Pickup	02/02→					A51	A43			
+ Spoiler						AS51				
PERSONA 300 / SATRIA (C9_M)	03/96→07/04					A51	A43		A36	
+ Spoiler						AS51				
SATRIA / COMPACT (C9_M)	04/96→05/06					A51	A43		A36	
+ Spoiler						AS51				
SATRIA NEO	02/07→					A55	A45			
+ Spoiler						AS55				
SAVVY	10/05→					A55	A43			
+ Spoiler						AS55				
WIRA	05/95→					A51	A43			
+ Spoiler						AS51				

A	B	C	D	E	F	G	H	J	K	L	M
CR1211 CR1206	CR1211 CR1203 CR1214	CR1211 CR1203 CR1214	CR1208	CR1202 CR1213	CR1209	CR1207	Special	Special	Special	Special	CR3007

...PROTON											
WIRA Hatchback	01/00→					A51	A43		A36	3
+ Spoiler						AS51			A45	5
RENAULT										
AVANTIME (DE0_)	09/01→05/03									
						AW65	AW45		AP30	
CAPTUR	06/13→									
→02/16		AFL65	AFL35	AFL6535G	G				AP28	
03/16→				AFL6535M	M					
CLIO Grandtour (KR0/1_)	02/08→									
		AFL60	AFL40	AFL6040G	G				AP30	
CLIO Grandtour IV	01/13→									
		AFL65	AFL35	AFL6535G	G					
CLIO II (BB0/1/2_, CB0/1/2_)	09/98→									
→05/09						A53	A45		AP30	
→05/09 + Spoiler						AS53		AS5345		
→05/09				AFL5345L	L					
05/09→		AFL50	AFL45		G					
CLIO III (BR0/1, CR0/1)	01/05→									
		AFL60	AFL40	AFL6040G	G				AP35	→05/07
									AP30	06/07→
CLIO IV	11/12→									
		AFL65	AFL35	AFL6535G	G					
DUSTER (HS_)	01/11→					A51	A51		AP35	→06/12
+ Spoiler						AS51			AP30	05/12→
				AFL5050L	L					
ESPACE III (JE0_)	11/96→10/02									
						AW65	AW45		AP40	
ESPACE IV (JK0/1_)	11/02→									
		AFL75	AFR70	AFU7570E	E				AP35	
ESPACE V	02/15→									
		AFL75	AFR70	AFL7570A	A				AP31	
EXPRESS Pickup	07/95→10/99					A45	A45			
+ Spoiler						AS45		AS4545		
FLUENCE (L30_)	02/10→									
		AFL60	AFL40	AFL6040G	G					
GRAND SCÉNIC II (JM0/1_)	04/04→									
→12/04				AFU6555H	H				AP26	
01/05→		AFL65	AFL55	AFU6555G	G					
GRAND SCÉNIC III (JZ0/1_)	02/09→									
		AFL75	AFR65	AFU7565G	G				AP31	
GRAND SCÉNIC IV (R9_)	09/16→									
		AFL80	AFR70	AFL8070A	A				AP31	

A	B	C	D	E	F	G	H	J	K	L	M
CR1211 CR1206	CR1211 CR1203 CR1214	CR1211 CR1203 CR1214	CR1208	CR1202 CR1213	CR1209	CR1207	Special	Special	Special	Special	CR3007

CHAMPION

...RENAULT

KADJAR	06/15→										
				AFL6540L	L				AP23		
Hybrid Blade						AHL65	AHL40				
KANGOO (KC0/1_)	08/97→					A51	A51		AP40	1 x	
+ Spoiler						AS51			A38	2 x	
				AFL5050L	L						
KANGOO BE BOP (KW0/1_)	02/09→										
						A55	A55		AP34		
		AFL58	AFL53	AFL5853G	G				A33		
KANGOO / GRAND KANGOO (KW0/1_)	02/08→										
						A55	A55		AP34		
		AFL58	AFL53	AFL5853G	G				A33		
KAPTUR (H5_)	03/16→										
				AFL6540M	M				AP28		
KOLEOS (HY_)	09/08→										
		AFL60	AFL48	AFL6048B	B						
KOLEOS II	08/16→										
				AFL6540L	L				AP23		
Hybrid Blade						AHL65	AHL40				
LAGUNA Coupe (DT0/1)	09/08→										
		AFL65	AFL40	AFL6540G	G						
LAGUNA I Grandtour (K56_)	09/95→08/02					A60	A48		A36		
+ Spoiler						AS60		AS6048			
LAGUNA II (BG0/1_)	03/01→					A60	A51		R50		
+ Spoiler						AS60					
				AFL6050L	L						
LAGUNA II Grandtour (KG0/1_)	03/01→					A60	A51		AP35		
+ Spoiler						AS60					
				AFL6050L	L						
LAGUNA III (BT0/1)	10/07→										
		AFL65	AFL40	AFL6540G	G				A48		
LAGUNA III Grandtour (KT0/1)	10/07→										
		AFL65	AFL40	AFL6540G	G				AP34		
LATITUDE (L70_)	07/10→					A60	A41				
+ Spoiler						AS60					
				AFL6040L	L						
LOGAN I (LS_)	09/04→					A51	A51				
				AFL5050L	L						
LOGAN I Estate (KS_)	04/07→					A51	A51		AP35		
				AFL5050L	L						

A	B	C	D	E	F	G	H	J	K	L	M
CR1211 CR1206	CR1211 CR1203 CR1214	CR1211 CR1203 CR1214	CR1208	CR1202 CR1213	CR1209	CR1207	Special	Special	Special	Special	CR3007

...RENAULT

LOGAN II	09/12→										
→02/15						A55	A51				
→02/15	+ Spoiler					AS55		AS5551			
→02/15				AFL5550L							
03/15→		AFL55	AFL48	AFL5548G	G						
LOGAN II Estate (K8_)	12/13→										
→02/15						A55	A51		AP28		
→02/15	+ Spoiler					AS55		AS5551			
→02/15				AFL5550L							
03/15→		AFL55	AFL48	AFL5548G	G						
MEGANE CC (EZ0/1_)	06/10→										
		AFL60	AFL40	AFL6040G	G						
MEGANE I (BA0/1_)	08/95→12/04					A55	A51		A51		
	+ Spoiler					AS55		AS5551			
				AFL5550L	L						
MEGANE I Cabriolet (EA0/1_)	10/96→08/03					A55	A51				
	+ Spoiler					AS55		AS5551			
				AFL5550L	L						
MEGANE I Classic (LA0/1_)	09/96→08/08					A55	A51				
	+ Spoiler					AS55		AS5551			
				AFL5550L	L						
MEGANE I Coach (DA0/1_)	03/96→08/03					A55	A51		AP40		
	+ Spoiler					AS55		AS5551			
				AFL5550L	L						
MEGANE I Grandtour (KA0/1_)	03/99→08/03					A55	A51		A36	→10/01	
	+ Spoiler					AS55		AS5551	AP35	11/01→	
				AFL5550L	L						
MEGANE II (BM0/1_, CM0/1_)	07/01→10/12										
→10/05						A60	A45		AP23		
→10/05	+ Spoiler					AS60					
→10/05				AFL6045L	L						
11/05→		AFL60	AFL45	AFL6045G	G						
MEGANE II Coupé-Cabriolet (EM0/1_)	09/03→03/10										
→10/05						A60	A45				
→10/05	+ Spoiler					AS60					
→10/05				AFL6045L	L						
11/05→		AFL60	AFL45	AFL6045G	G						
MEGANE II Estate (KM0/1_)	08/03→08/12										
→10/05						A60	A45		AP26		
→10/05	+ Spoiler					AS60					
→10/05				AFL6045L	L						
11/05→		AFL60	AFL45	AFL6045G	G						

A	B	C	D	E	F	G	H	J	K	L	M
CR1211 CR1206	CR1211 CR1203 CR1214	CR1211 CR1203 CR1214	CR1208	CR1202 CR1213	CR1209	CR1207	Special	Special	Special	Special	CR3007

...RENAULT

MEGANE II Saloon (LM0/1_)	09/03→										
→10/05						A60	A45				
→10/05 + Spoiler						AS60					
→10/05				AFL6045L	L						
11/05→		AFL60	AFL45	AFL6045G	G						
MEGANE III Coupe (DZ0/1_)	11/08→										
		AFL60	AFL40	AFL6040G	G					AP34	
MEGANE III Grandtour (KZ0/1)	11/08→										
		AFL60	AFL40	AFL6040G	G					AP35	
MEGANE III Hatchback (BZ0_)	11/08→										
		AFL60	AFL40	AFL6040G	G					AP34	
MEGANE IV (B9A/M_)	11/15→										
		AFL60	AFL45	AFL6045G	G						
MEGANE Scenic (JA0/1_)	10/96→12/01					A60	A41			AP40	
+ Spoiler						AS60					
				AFL6040L	L						
MODUS / GRAND MODUS (F/JP0_)	09/04→										
		AFL70	AFR65	AFU7065E	E					AP26	→05/05
										AP30	06/05→
SAFRANE II (B54_)	07/96→12/00						A60			A55	
+ Spoiler						AS60		AS6060			
SANDERO/STEPWAY I	11/07→					A51	A51			AP40	
				AFL5050L	L						
SANDERO/STEPWAY II	11/13→										
→02/15						A55	A51			AP28	
→02/15 + Spoiler						AS55		AS5551			
→02/15				AFL5550L							
03/15→		AFL55	AFL48	AFL5548G	G						
SCÉNIC I (JA0/1_)	09/99→10/03					A60	A41			AP40	
+ Spoiler						AS60					
				AFL6040L	L						
SCÉNIC II (JM0/1_)	06/03→										
→12/04				AFU6555H	H					AP26	
01/05→		AFL65	AFL55	AFU6555G	G						
SCÉNIC III (JZ0/1_)	02/09→										
		AFL75	AFR65	AFU7565G	G					AP31	
SCÉNIC IV (J9_)	09/16→										
		AFL80	AFR70	AFL8070A	A					AP31	
SPORT SPIDER (EF0_)	03/95→10/99										
x 1						A55					
TALISMAN	06/15→										
		AFL60	AFL45	AFL6045G	G						

A	B	C	D	E	F	G	H	J	K	L	M
CR1211 CR1206	CR1211 CR1203 CR1214	CR1211 CR1203 CR1214	CR1208	CR1202 CR1213	CR1209	CR1207	Special	Special	Special	Special	CR3007

AEROVANTAGE

...RENAULT												
TALISMAN Grandtour	03/16→											
		AFL60	AFL45	AFL6045G	G					AP23		
THALIA I (LB0/1/2_)	02/98→					A53	A45			AP30		
+ Spoiler						AS53		AS5345				
				AFL5345L	L							
THALIA II (LU1/2_)	09/08→											
		AFL60	AFL40	AFL6040G	G							
TWINGO II (CN0_)	03/07→											
		AFL60	AFL40	AFU6040A	A					AP30		
TWINGO III	09/14→											
		AFL50	AFL35	AFL5035G	G					AP31		
TWIZY (MAM_)	04/12→											
x 1						A45						
VEL SATIS (BJ0_)	06/02→											
		AFL75	AFR65		E					AP40		
WIND (E4M_)	07/10→											
		AFL60	AFL40	AFU6040A	A							
ZOE	06/12→											
		AFL63	AFL35		A					AP28		
RENAULT												
CLIO II Box (SB0/1/2_)	09/98→					A53	A45			AP30		
+ Spoiler						AS53		AS5345				
				AFL5345L	L							
CLIO IV Box	01/14→											
		AFL65	AFL35	AFL6535G	G							
KANGOO Express (FC0/1_)	08/97→					A51	A51			AP40	1 x	
+ Spoiler						AS51				A38	2 x	
				AFL5050L	L							
KANGOO Express (FW0/1_)	02/08→											
						A55	A55			AP34		
		AFL58	AFL53	AFL5853G	G					A33		
LOGAN EXPRESS (US_)	04/07→					A51	A51			AP35		
				AFL5050L	L							
MASTER II Box (FD)	07/98→											
						AW60	AW60	AW6060				
MASTER II Bus (JD)	03/98→											
						AW60	AW60	AW6060				
MASTER II Platform/Chassis (ED/HD/UD)	07/98→											
						AW60	AW60	AW6060				
MASTER III Box (FV)	02/10→					A65	A65					
MASTER III Bus (JV)	02/11→					A65	A65					
MASTER III Platform/Chassis (EV, HV, UV)	02/10→					A65	A65					

A	B	C	D	E	F	G	H	J	K	L	M
CR1211 CR1206	CR1211 CR1203 CR1214	CR1211 CR1203 CR1214	CR1208	CR1202 CR1213	CR1209	CR1207	Special	Special	Special	Special	CR3007

CHAMPION

AEROVANTAGE

...RENAULT												
TRAFIC II Box (FL)	03/01→					A60	A53		AP40	2 x
+ Spoiler						AS60			A36	1 x
TRAFIC II Bus (JL)	03/01→					A60	A53		AP40	2 x
+ Spoiler						AS60			A36	1 x
TRAFIC II Platform/Chassis (EL)	03/01→					A60	A53			
+ Spoiler						AS60				
TRAFIC III Box	05/14→									
		AFL65	AFL48	AFL6548A	A				AP40	2 x
TRAFIC III Bus	05/14→									
		AFL65	AFL48	AFL6548A	A				AP40	2 x
TRAFIC III Platform/Chassis	05/14→									
		AFL65	AFL48	AFL6548A	A					
ROLLS-ROYCE										
CORNICHE V Convertible	01/00→09/02					A55	A55			
+ Spoiler						AS55				
SILVER SERAPH	03/98→09/02					A60	A60			
+ Spoiler						AS60				
ROVER										
25 (RF)	09/99→06/06					A45	A45		A45	→09/04
+ Spoiler						AS45		AS4545	AP40	10/04→
45 (RT)	02/00→05/05					A51	A45		A45	
+ Spoiler						AS51		AS5145		
45 Saloon (RT)	02/00→05/05					A51	A45			
+ Spoiler						AS51		AS5145		
75 (RJ)	02/99→05/05					A55	A55			
+ Spoiler						AS55		AS5555		
75 Tourer (RJ)	08/01→06/06					A55	A55		AP34	
+ Spoiler						AS55		AS5555		
200 (RF)	11/95→11/00					A45	A45		A45	
+ Spoiler						AS45		AS4545		
400 (RT)	05/95→03/00					A51	A45			
+ Spoiler						AS51		AS5145		
400 Hatchback (RT)	05/95→03/00					A51	A45		A45	
+ Spoiler						AS51		AS5145		
CITYROVER	09/03→12/05					A51	A51		A29	
+ Spoiler						AS51				
COUPE	03/96→11/99					A45	A45		A51	
+ Spoiler						AS45		AS4545		
STREETWISE	08/03→05/05					A45	A45		A45	→09/04
+ Spoiler						AS45		AS4545	AP40	10/04→

A	B	C	D	E	F	G	H	J	K	L	M
CR1211 CR1206	CR1211 CR1203 CR1214	CR1211 CR1203 CR1214	CR1208	CR1202 CR1213	CR1209	CR1207	Special	Special	Special	Special	CR3007

CHAMPION

SAAB											
9-3 (YS3D)	02/98→08/03					A53	A53		A51	
+ Spoiler						AS53				
				AFL5353L	L					
9-3 (YS3F)	09/02→02/15									
→08/07						A55	A55			
→08/07 + Spoiler						AS55				
09/07→		AFL58	AFL58		B					
9-3 Cabriolet (YS3D)	02/98→08/03					A53	A53			
+ Spoiler						AS53				
				AFL5353L	L					
9-3 Convertible (YS3F)	08/03→02/15									
→08/07						A55	A55			
→08/07 + Spoiler						AS55				
09/07→		AFL58	AFL58		B					
9-3 Estate (YS3F)	03/05→02/15									
→08/07						A55	A55		AP28	
→08/07 + Spoiler						AS55				
09/07→		AFL58	AFL58		B					
9-3X	02/09→12/12									
		AFL58	AFL58		B					
9-5 (YS3E)	09/97→12/09									
→08/07						A60	A55			
→08/07 + Spoiler						AS60				
09/07→		AFL58	AFL58		G					
9-5 (YS3G)	01/10→01/12									
				AFL6053L	L					
Hybrid Blade						AHL60	AHL50			
9-5 Estate (YS3E)	10/98→12/09									
→08/07						A60	A55		AP37	
→08/07 + Spoiler						AS60				
09/07→		AFL58	AFL58		G					
9-7X	06/04→07/12									
→08/07						A60	A55		AP37	
→08/07 + Spoiler						AS60				
09/07→		AFL58	AFL58		G					
SEAT											
ALHAMBRA (7V8, 7V9)	04/96→03/10									
→10/01								A7065	A41	
11/01→		AFL70	AFR70	AFU7070E	E					
ALHAMBRA (710, 711)	06/10→									
		AFL70	AFL40	AFL7040A	F				AF34	

A	B	C	D	E	F	G	H	J	K	L	M
CR1211 CR1206	CR1211 CR1203 CR1214	CR1211 CR1203 CR1214	CR1208	CR1202 CR1213	CR1209	CR1207	Special	Special	Special	Special	CR3007

...SEAT

AROSA (6H)	05/97→06/04										
→02/99							A48	A48		A29	
→02/99 + Spoiler							AS48		AS4848		
03/99→							A53	A48			
03/99→ + Spoiler							AS53		AS5348		
03/99→									ASC5348		
ATECA	04/16→										
		AFL65	AFL45	AFL6545F	F				AF28		
CORDOBA (6K2)	06/99→10/02					A53	A48				
+ Spoiler						AS53		AS5348			
								ASC5348			
				AFL5348L	L						
CORDOBA (6L2)	09/02→11/09										
→04/06						A53	A48				
→04/06 + Spoiler						AS53		AS5348			
→04/06								ASC5348			
→04/06				AFL5348L	L						
05/06→		AFL53	AFL48	AFL5348A	A						
CORDOBA Vario (6K5)	08/96→12/02					A53	A48		A29		
+ Spoiler						AS53		AS5348			
				AFL5348L	L						
CORDOBA Vario (6K5)	06/99→12/02					A53	A48				
+ Spoiler								AS5348			
								ASC5348			
				AFL5348L	L						
EXEO (3R2)	12/08→										
				AFL5555K	K						
EXEO ST (3R5)	05/09→										
				AFL5555K	K				AF33X		
IBIZA III (6K1)	08/99→02/02					A53	A48		A33		
+ Spoiler						AS53		AS5348			
								ASC5348			
				AFL5348L	L						
IBIZA IV (6L1)	02/02→11/09										
→04/06						A53	A48		A33		
→04/06 + Spoiler						AS53		AS5348			
→04/06								ASC5348			
05/06→		AFL53	AFL48	AFL5348A	A						
IBIZA V (6J5, 6P1)	03/08→										
		AFL60	AFL40	AFL6040A	A				A33	→08/11	
									AF33X	09/11→	
IBIZA V (KJ1)	01/17→										
		AFL65	AFL45	AFL6545F	F				AF34		

A	B	C	D	E	F	G	H	J	K	L	M
CR1211 CR1206	CR1211 CR1203 CR1214	CR1211 CR1203 CR1214	CR1208	CR1202 CR1213	CR1209	CR1207	Special	Special	Special	Special	CR3007

AEROVANTAGE

...SEAT											
IBIZA V SPORTCOUPE (6J1, 6P5)	07/08→										
		AFL60	AFL40	AFL6040A	A				A33	→08/11	
									AF33X	09/11→	
IBIZA V ST (6J8, 6P8)	03/10→										
		AFL60	AFL40	AFL6040A	A				A33		
LEON (1M1)	11/99→06/06					A53	A48				
+ Spoiler						AS53		AS5348			
								ASC5348			
				AFL5348L	L						
LEON (1P1)	05/05→12/12										
		AFL65	AFR65	AFU6565B	B				A29	→02/09	
									AF28X	03/09→	
LEON (5F1)	09/12→										
		AFL65	AFL40	AFL6540F	F				AF34		
LEON SC (5F5)	01/13→										
		AFL65	AFL40	AFL6540F	F				AF40		
LEON ST (5F8)	08/13→										
		AFL65	AFL40	AFL6540F	F				AF34		
Mii (KF1_)	10/11→										
		AFL60	AFL40	AFL6040F	F				AF25		
TOLEDO II (1M2)	10/98→05/06					A53	A48				
+ Spoiler						AS53		AS5348			
								ASC5348			
				AFL5348L	L						
TOLEDO IV (KG3)	07/12→										
		AFL60	AFL40	AFL6040F	F				AF40		
SEAT											
INCA (6K9)	11/95→06/03					A53	A45		A45		
SKODA											
CITIGO	10/11→										
		AFL60	AFL40	AFL6040F	F				AF25		
FABIA (6Y2)	08/99→03/08					A53	A48				
+ Spoiler						AS53		AS5348			
								ASC5348			
				AFL5348L	L						
FABIA	12/06→12/14										
		AFL53	AFL53	AFL5353A	A				AF33X		
FABIA (NJ3)	08/14→										
		AFL60	AFL40	AFL6040F	F				AF34		

A	B	C	D	E	F	G	H	J	K	L	M
CR1211 CR1206	CR1211 CR1203 CR1214	CR1211 CR1203 CR1214	CR1208	CR1202 CR1213	CR1209	CR1207	Special	Special	Special	Special	CR3007

AEROVANTAGE

...SKODA

FABIA Combi (6Y5)	04/00→12/07						A53	A48				
+ Spoiler							AS53		AS5348			
									ASC5348			
				AFL5348L	L							
FABIA Combi	10/07→12/14											
		AFL53	AFL53	AFL5353A	A					AF38X		
FABIA Estate (NJ5)	10/14→											
		AFL60	AFL40	AFL6040F	F					AF40		
FABIA Saloon (6Y3)	10/99→12/07						A53	A48				
+ Spoiler							AS53		AS5348			
									ASC5348			
				AFL5348L	L							
FELICIA I Estate (6U5)	07/95→03/98						A51	A51		A41		
+ Spoiler							AS51					
FELICIA I Fun (797)	10/95→04/02						A51	A51				
+ Spoiler							AS51					
FELICIA II (6U1)	01/98→06/01						A51	A51		A41		
+ Spoiler							AS51					
FELICIA II Estate (6U5)	01/98→06/01						A51	A51		A41		
+ Spoiler							AS51					
KAROQ (NU7)	07/17→											
		AFL65	AFL45	AFL6545F	F					AF34		
OCTAVIA (1U2)	09/96→12/10						A53	A48		A36		
+ Spoiler							AS53		AS5348			
									ASC5348			
				AFL5348L	L							
OCTAVIA (1Z3)	02/04→06/13											
		AFL60	AFL48	AFL6048E	E					AF38X		
OCTAVIA (5E3)	11/12→											
		AFL60	AFL48	AFL6048F	F							
OCTAVIA Combi (1U5)	07/98→12/10						A53	A48		A33		
+ Spoiler							AS53		AS5348			
									ASC5348			
				AFL5348L	L							
OCTAVIA Combi (1Z5)	02/04→06/13											
		AFL60	AFL48	AFL6048E	E					AF38X		
OCTAVIA Combi (5E5)	11/12→											
		AFL60	AFL48	AFL6048F	F					AF34		
RAPID (NH3)	07/12→											
		AFL60	AFL40	AFL6040F	F					AF28		
RAPID Spaceback (NH1)	07/12→											
		AFL60	AFL40	AFL6040F	F					AF40		

A	B	C	D	E	F	G	H	J	K	L	M
CR1211 CR1206	CR1211 CR1203 CR1214	CR1211 CR1203 CR1214	CR1208	CR1202 CR1213	CR1209	CR1207	Special	Special	Special	Special	CR3007

...SKODA											
ROOMSTER (5J)	03/06→05/15										
		AFL53	AFL53	AFL5353A	A					AF33X	
SUPERB (3U4)	12/01→03/08										
→10/04		AFL53	AFL53A		E						
11/04→						A53	A48				
11/04→ + Spoiler						AS53		AS5348			
11/04→								ASC5348			
11/04→				AFL5348L	L						
SUPERB (3T4)	03/08→05/15										
		AFL60	AFL45	AFL6045A	A						
SUPERB (3V3)	03/15→										
		AFL65	AFL45	AFL6545F	F						
SUPERB Estate (3T5)	10/09→05/15										
		AFL60	AFL45	AFL6045A	A					AF40	
SUPERB Estate (3V5)	03/15→										
		AFL65	AFL45	AFL6545F	F					AF40	
YETI (5L)	05/09→12/17										
		AFL60	AFL48	AFL6048A	A					AF27	
SKODA											
FABIA Praktik	07/01→12/07					A53	A48				
+ Spoiler						AS53		AS5348			
								ASC5348			
				AFL5348L	L						
ROOMSTER Praktik (5J)	03/07→05/15										
		AFL53	AFL53	AFL5353A	A					AF33X	
SMART											
CABRIO (450)	03/00→01/04										
						A53	A53				
+ Spoiler						AS53					
CITY-COUPE (450)	07/98→01/04										
						A53	A53			A33	
+ Spoiler						AS53					
CROSSBLADE (450)	06/02→12/03										
						A53	A53				
+ Spoiler						AS53					
FORFOUR (454)	01/04→06/06					A65	A45			AP34	
+ Spoiler						AS65					
				AFL6545L	L						
FORFOUR Hatchback (453)	07/14→										
		AFL50	AFL35	AFL5035G	G					AP23	
FORTWO Cabrio (450)	01/04→01/07										
						A53	A53				
+ Spoiler						AS53					

A	B	C	D	E	F	G	H	J	K	L	M
CR1211 CR1206	CR1211 CR1203 CR1214	CR1211 CR1203 CR1214	CR1208	CR1202 CR1213	CR1209	CR1207	Special	Special	Special	Special	CR3007

CHAMPION

AEROVANTAGE

...SMART												
FORTWO Cabrio (451)	01/07→											
		AFL58	AFR53	AFU5853B	B							
FORTWO Convertible (453)	09/15→											
		AFL50	AFL35	AFL5035G	G							
FORTWO Coupe (450)	01/04→02/07											
						A53	A53		A33			
+ Spoiler						AS53						
FORTWO Coupe (451)	01/07→											
		AFL58	AFR53	AFU5853B	B				AP26			
FORTWO Coupe (453)	07/14→											
		AFL50	AFL35	AFL5035G	G							
ROADSTER (452)	04/03→11/05					A51	A45					
+ Spoiler						AS51		AS5145				
ROADSTER Coupe (452)	04/03→11/05					A51	A45					
+ Spoiler						AS51		AS5145				
SSANGYONG												
ACTYON I	11/05→					A53	A48		A51			
+ Spoiler						AS53		AS5348				
				AFL5348L	L							
ACTYON II	08/12→					A53	A48					
+ Spoiler						AS53		AS5348				
				AFL5348L	L							
ACTYON SPORTS I (QJ)	11/05→					A53	A48					
+ Spoiler						AS53		AS5348				
				AFL5348L	L							
ACTYON SPORTS II	10/12→					A53	A48					
+ Spoiler						AS53		AS5348				
				AFL5348L	L							
KORANDO (KJ)	12/96→11/06					A45	A45		A29			
+ Spoiler						AS45		AS4545				
KORANDO	07/10→					A60	A41					
+ Spoiler						AS60						
				AFL6040L	L							
KORANDO Cabrio (KJ)	12/96→11/06					A45	A45					
+ Spoiler						AS45		AS4545				
KYRON	05/05→					A55	A48		A36			
+ Spoiler						AS55						
				AFL5548L	L							
MUSSO SPORTS	08/04→					A51	A45					
+ Spoiler						AS51		AS5145				
REXTON (GAB_)	04/02→					A51	A51		A36			
+ Spoiler						AS51						
				AFL5050L								

A	B	C	D	E	F	G	H	J	K	L	M
CR1211 CR1206	CR1211 CR1203 CR1214	CR1211 CR1203 CR1214	CR1208	CR1202 CR1213	CR1209	CR1207	Special	Special	Special	Special	CR3007

...SSANGYONG												
REXTON W	07/12→					A51	A51		A36	
+ Spoiler						AS51				
				AFL5050L						
RODIUS	05/05→					A60	A45		A29	
+ Spoiler						AS60				
				AFL6045L	L					
RODIUS II	07/13→					A60	A41			
+ Spoiler						AS60				
				AFL6040L	L					
STAVIC	02/05→					A60	A45		A29	
+ Spoiler						AS60				
				AFL6045L	L					
TIVOLI	01/15→									
				AFL6040L	L					
Hybrid Blade						AHL60	AHL40			
TURISMO	08/13→									
				AFL6040L	L					
Hybrid Blade						AHL60	AHL40			
XLV Closed Off-Road Vehicle	04/16→									
				AFL6040L	L					
Hybrid Blade						AHL60	AHL40			
SUBARU										
BRZ	06/12→									
				AFL5550L	L					
Hybrid Blade						AHL55	AHL50			
FORESTER (SF)	03/97→09/02					A53	A48		A38	
+ Spoiler						AS53		AS5348		
				AFL5348L	L					
FORESTER (SG)	06/02→10/12					A53	A48		A38	
+ Spoiler						AS53		AS5348		
				AFL5348L	L					
FORESTER (SH)	01/08→									
				AFL6045L	L				AP35B	
Hybrid Blade						AHL60	AHL45			
FORESTER (SJ)	11/12→									
				AFL6540L	L				AP35B	
Hybrid Blade						AHL65	AHL40			
IMPREZA Estate (GG)	10/00→12/08					A55	A43		A38	
+ Spoiler						AS55				
IMPREZA Estate	07/07→12/12					A53	A45		A41	
+ Spoiler						AS53				
				AFL5345L	L					

A	B	C	D	E	F	G	H	J	K	L	M
CR1211 CR1206	CR1211 CR1203 CR1214	CR1211 CR1203 CR1214	CR1208	CR1202 CR1213	CR1209	CR1207	Special	Special	Special	Special	CR3007

CHAMPION

AEROVANTAGE

...SUBARU												
IMPREZA Hatchback	10/00→12/07						A55	A41			
+ Spoiler							AS55		AS5541		
				AFL5540L	L						
IMPREZA Hatchback (GR, GH, G3)	03/07→05/14										
				AFL6040L	L						
Hybrid Blade						AHL60	AHL40				
IMPREZA Hatchback (GP)	10/11→					A65	A41		AP30B	
+ Spoiler						AS65				
				AFL6540L	L						
IMPREZA Saloon (GD)	09/99→06/09					A55	A43			
+ Spoiler						AS55				
IMPREZA Saloon (GR)	03/07→									
				AFL6040L	L						
Hybrid Blade						AHL60	AHL40				
JUSTY II (JMA, MS)	10/95→11/03					A53	A45		A38	
+ Spoiler						AS53		AS5345		
JUSTY III (G3X)	09/03→					A48	A45		A29	
JUSTY IV	01/07→					A51	A41			
LEGACY III (BE, BH)	10/98→08/03					A55	A51			
				AFL5550L	L						
LEGACY III Estate (BE, BH)	10/98→08/03					A55	A51		A38	
				AFL5550L	L						
LEGACY IV (BL, BP)	09/03→12/15					A60	A45			
				AFL6045L	L						
LEGACY IV Estate (BL, BP, B13_)	09/03→12/09					A60	A45		AP35B	
				AFL6045L	L						
LEGACY V (BM, BR)	05/09→									
				AFL6048L	L						
Hybrid Blade						AHL60	AHL48				
LEGACY V Estate (BM, BR)	06/08→12/14									
				AFL6048L	L						
Hybrid Blade						AHL60	AHL48				
LEGACY OUTBACK (BG)	01/96→12/99					A53	A48		A38	
+ Spoiler						AS53		AS5348		
				AFL5348L	L						
LEVORG	03/15→									
				AFL6540L	L						
Hybrid Blade						AHL65	AHL40				
OUTBACK (BE, BH)	10/98→08/03					A55	A51		A38	
				AFL5550L	L						
OUTBACK (BL, BP)	09/03→06/10					A60	A45		AP35B	
				AFL6045L	L						

A	B	C	D	E	F	G	H	J	K	L	M
CR1211 CR1206	CR1211 CR1203 CR1214	CR1211 CR1203 CR1214	CR1208	CR1202 CR1213	CR1209	CR1207	Special	Special	Special	Special	CR3007

...SUBARU												
OUTBACK (BM, BR)	09/09→											
				AFL6048L	L					AP35B		
Hybrid Blade						AHL60	AHL48					
OUTBACK (BS)	10/14→											
				AFL6540L	L					AP35B		
Hybrid Blade						AHL65	AHL40					
TREZIA	11/10→											
x 1						A70						
TRIBECA (B9)	01/05→						A51					
						T65H01						
WRX Hatchback (GP)	10/11→12/12											
				AFL6540L	L							
Hybrid Blade						AHL65	AHL40					
WRX Saloon (GJ)	07/11→											
				AFL6540L	L							
Hybrid Blade						AHL65	AHL40					
XV	12/11→											
				AFL6540L	L					AP30B		
Hybrid Blade						AHL65	AHL40					
SUZUKI												
ALTO (HA12, HA23)	10/97→09/04					A48	A43			A33		
+ Spoiler						AS48						
ALTO (HA24)	09/04→12/09					A45	A41			A29		
ALTO (HA25, HA35)	01/09→					A55	A36			AP28A		
+ Spoiler						AS55						
				AFL5535L	L							
BALENO (EG)	03/95→12/09					A51	A45					
BALENO	02/16→					A53	A45			AP30A		
BALENO Estate (EG)	04/95→04/05					A51	A45			A36		
BALENO Hatchback (EG)	03/95→05/02					A51	A45			A38		
CELERIO	02/14→					A53	A36			AP30A		
+ Spoiler						AS53						
GRAND VITARA I (FT)	03/98→08/06					A48	A48			A38		
+ Spoiler						AS48		AS4848				
GRAND VITARA I Convertible (GT)	03/98→09/05					A48	A48					
+ Spoiler						AS48		AS4848				
GRAND VITARA II (JT)	04/05→					A48	A48			AP30A		
+ Spoiler						AS48		AS4848				
IGNIS (FH)	10/00→12/05					A48	A45			A36		
IGNIS II	09/03→					A48	A45			A36		

A	B	C	D	E	F	G	H	J	K	L	M
CR1211 CR1206	CR1211 CR1203 CR1214	CR1211 CR1203 CR1214	CR1208	CR1202 CR1213	CR1209	CR1207	Special	Special	Special	Special	CR3007

CHAMPION

...SUZUKI

IGNIS III (MF)	10/16→											
				AFL5348L	L					AP30B		
Hybrid Blade						AHL50	AHL48					
JIMNY (FJ)	07/98→					A45	A41			A29		
+ Spoiler						AS45						
JIMNY Open Off-Road Vehicle (SN)	01/98→					A45	A41					
+ Spoiler						AS45						
KIZASHI (FR)	10/10→											
				AFL6050L	L							
Hybrid Blade						AHL60	AHL50					
LIANA (ER)	10/01→					A55	A45					
LIANA Estate (ER)	07/01→12/07					A55	A45			A29		
LIANA Hatchback	06/01→					A55	A45			AP30B		
SPLASH	01/08→					A53	A41			AP25B		
+ Spoiler						AS53						
SWIFT III (MZ, EZ)	02/05→					A53	A45			AP25B		
+ Spoiler						AS53		AS5345				
				AFL5345L	L							
SWIFT IV (FZ, NZ)	10/10→					A55	A43			AP25B		
+ Spoiler						AS55						
SWIFT V (AZ)	01/17→					A51	A48					
+ Spoiler						AS51		AS5148				
SX4 (EY, GY)	06/06→					A65	A36			AP25B		
+ Spoiler						AS65						
				AFL6535L	L							
SX4 Saloon (GY)	10/07→					A65	A36					
+ Spoiler						AS65						
				AFL6535L	L							
SX4 S-Cross	08/13→											
				AFL6535L	L					AP25B		
Hybrid Blade						AHL65	AHL35					
VITARA (ET)	12/03→12/05					A48	A48					
+ Spoiler						AS48		AS4848				
VITARA (LY)	02/15→											
				AFL6040L	L					AP25B		
Hybrid Blade						AHL60	AHL40					
VITARA Cabrio (ET)	12/03→12/05					A48	A48					
+ Spoiler						AS48		AS4848				
WAGON R	07/03→05/08					A51	A45			A33		
+ Spoiler						AS51		AS5145				
WAGON R+ (EM)	10/97→10/00					A51	A45			A29		
+ Spoiler						AS51		AS5145				

A	B	C	D	E	F	G	H	J	K	L	M
CR1211 CR1206	CR1211 CR1203 CR1214	CR1211 CR1203 CR1214	CR1208	CR1202 CR1213	CR1209	CR1207	Special	Special	Special	Special	CR3007

...SUZUKI												
WAGON R+ (MM)	05/00→					A51	A45		A33	
+ Spoiler						AS51		AS5145		
X-90 (EL)	09/95→12/97					A43	A45			
XL7 (JC)	09/06→12/09					A48	A48			
SUZUKI										
CARRY Box	10/95→03/99					A33	A33			
CARRY Box (FD)	02/99→					A38	A38			
CARRY Pickup (FD)	02/99→					A38	A38			
TESLA										
MODEL S	09/12→									
		AFL70	AFL43		A					
TOYOTA										
4 RUNNER (KZN18_, VZN18_, RZN18_)	11/95→11/02					A43	A43		A36	
AURIS (NRE15_, ZZE15_, ADE15_, ZRE15_, NDE15_)	10/06→09/12					A65	A41		AP30A	
+ Spoiler						AS65		AS6541		
				AFL6540L	L					
AURIS (ZWE18_, NZE18_, ZRE18_)	10/12→									
				AFL6535L	L					
Hybrid Blade						AHL65	AHL35			
AURIS TOURING SPORTS (ADE18_, ZWE18_, ZRE18_)	07/13→									
				AFL6535L	L					
Hybrid Blade						AHL65	AHL35			
AVENSIS (_T22_, ZZT22_)	09/97→02/03					A53	A45			
+ Spoiler						AS53		AS5345		
				AFL5345L	L					
AVENSIS (T25_)	04/03→11/08					A60	A41		AP40A	
+ Spoiler						AS60			A41	
				AFL6040L	L					
AVENSIS Estate (T25, CDT25_, ZZT25_)	04/03→11/08					A60	A41		AP30A	
+ Spoiler						AS60				
				AFL6040L	L					
AVENSIS Liftback (_T22_, ST22_)	09/97→02/03					A53	A45		A51	
+ Spoiler						AS53		AS5345		
				AFL5345L	L					
AVENSIS Saloon (T25)	04/03→11/08					A60	A41			
+ Spoiler						AS60				
				AFL6040L	L					

	A	B	C	D	E	F	G	H	J	K	L	M
	CR1211 CR1206	CR1211 CR1203 CR1214	CR1211 CR1203 CR1214	CR1208	CR1202 CR1213	CR1209	CR1207	Special	Special	Special	Special	CR3007

...TOYOTA

AVENSIS Station Wagon (_T22_, ZZT22_)	09/97→02/03						A53	A45		A36	
+ Spoiler							AS53		AS5345		
				AFL5345L	L						
AVENSIS VERSO (_CLM2_, _ACM2_)	08/01→11/09						A65	A41		AP40A	
+ Spoiler							AS65		AS6541		
				AFL6540L	L						
AYGO (WNB1_, KGB1_)	02/05→										
x 1							A65			AP29	
AYGO (PAB4_, KGB4_)	05/14→										
x 1		AFL65			B					AP30A	
CAMRY (_CV2_, _XV2_)	08/96→11/01						A53	A48			
+ Spoiler							AS53		AS5348		
				AFL5348L	L						
CAMRY (MCV3_, ACV3_, _XV3_)	08/01→11/06						A65	A48			
+ Spoiler							AS65				
CAMRY Saloon (_XV4_)	01/06→12/14										
				AFL6050L	L						
Hybrid Blade							AHL60	AHL50			
CAMRY Saloon (_V5_)	09/11→										
				AFL6545L	L						
Hybrid Blade							AHL65	AHL45			
CELICA (ZZT23_)	08/99→03/06						A65	A41		A51	
+ Spoiler							AS65				
				AFL6540L	L						
COROLLA (_E11_)	04/97→06/02						A51	A45			
+ Spoiler							AS51		AS5145		
COROLLA (CDE12_, ZZE12_, NDE12_, ZDE12_)	01/01→12/07						A55	A45		AP35A	
+ Spoiler							AS55		AS5545		
COROLLA Compact (_E11_)	04/97→01/02						A51	A45		A41	
+ Spoiler							AS51		AS5145		
COROLLA Estate (_E12J_, _E12T_)	03/01→12/08						A60	A41		AP35A	
+ Spoiler							AS60				
				AFL6040L	L						
COROLLA Liftback (_E11_)	04/97→01/02						A51	A45		A41	3
+ Spoiler							AS51		AS5145	A51	5
COROLLA Saloon (_E12J_, _E12T_)	08/00→03/08						A55	A45			
+ Spoiler							AS55		AS5545		
COROLLA Saloon (E15_)	10/06→										
				AFL6540L	L						
Hybrid Blade							AHL65	AHL40			

A	B	C	D	E	F	G	H	J	K	L	M
CR1211 CR1206	CR1211 CR1203 CR1214	CR1211 CR1203 CR1214	CR1208	CR1202 CR1213	CR1209	CR1207	Special	Special	Special	Special	CR3007

...TOYOTA												
COROLLA Saloon (NRE18_, ZRE17_, ZRE18_, NDE18_)	06/13→						A65	A36				
+ Spoiler							AS65					
COROLLA Verso (ZDE12_, CDE12_)	07/01→07/04						A65	A41		AP35A		
+ Spoiler							AS65		AS6541			
				AFL6540L	L							
COROLLA Verso (ZER_, ZZE12_, R1_)	03/04→04/09						A65	A41				
+ Spoiler							AS65		AS6541			
				AFL6540L	L							
COROLLA Wagon (__E11_)	04/97→10/01						A51	A45		A36		
+ Spoiler							AS51		AS5145			
FJ CRUISER (GSJ1_)	01/06→						A41	A36				
Hybrid Blade							AHL40	AHL35				
GT 86 Coupe (ZN6_)	03/12→											
				AFL5550L	L							
Hybrid Blade							AHL55	AHL50				
HILUX Closed Off-Road Vehicle (RZN1_, LN1_)	08/95→08/05						A53	A51				
+ Spoiler							AS53					
HILUX III Pickup (KUN_, TGN_, LAN_, GGN_)	08/04→						A53	A48				
+ Spoiler							AS53		AS5348			
				AFL5348L	L							
IQ (KPJ1_, NGJ1_, KGJ1_, NUJ1_)	11/08→											
				AFL5345L	L							
Hybrid Blade							AHL55	AHL45				
IST (NCP6_)	04/02→07/07											
				AFL6035L	L							
Hybrid Blade							AHL60	AHL35				
LAND CRUISER (LJ12_, KZJ12_, TRJ12_, KDJ12_, GRJ12_)	09/02→08/10						A55	A53		AP40A		
+ Spoiler							AS55			A45		
LAND CRUISER 90 (_J9_)	04/95→						A48	A45		A36		
+ Spoiler							AS48					
LAND CRUISER 100 (FZJ1_, UZJ1_)	01/98→08/07						A48	A45		A36		
+ Spoiler							AS48					
LAND CRUISER 150 (KDJ15_, GRJ15_)	07/09→											
Hybrid Blade							AHL60	AHL55		AP30A		
LAND CRUISER 200 (VDJ2_, UZJ2_)	08/07→											
Hybrid Blade							AHL60	AHL55		AP30A		

	A	B	C	D	E	F	G	H	J	K	L	M
	CR1211 CR1206	CR1211 CR1203 CR1214	CR1211 CR1203 CR1214	CR1208	CR1202 CR1213	CR1209	CR1207	Special	Special	Special	Special	CR3007

...TOYOTA

MATRIX (ZZE13_)	01/02→12/07											
				AFL5345L	L							
Hybrid Blade						AHL55	AHL45					
MR 2 III (ZZW3_)	10/99→06/07					A51	A48					
+ Spoiler						AS51						
PASEO Convertible (EL54)	10/96→01/98					A51	A45					
+ Spoiler						AS51						
PASEO Coupe (EL54)	08/95→12/99					A51	A45					
+ Spoiler						AS51						
PICNIC (_XM10)	05/96→12/01					A60	A41			A38		
+ Spoiler						AS60						
				AFL6040L	L							
PREVIA (MCR3_, ACR3_, CLR3_)	02/00→01/06						A45			AP40A		
						T70H01						
PREVIA III (_R2_, _R5_)	10/05→											
				AFL6540L	L					AP30A		
Hybrid Blade						AHL65	AHL40					
PRIUS (ZVW3_)	04/09→											
				AFL6540L	L					A41		
Hybrid Blade						AHL65	AHL40					
PRIUS Hatchback (NHW20_)	08/03→03/09					A65	A41			A41		
+ Spoiler						AS65		AS6541				
				AFL6540L	L							
PRIUS PLUS (ZVW4_)	05/11→											
				AFL6540L	L							
Hybrid Blade						AHL65	AHL40					
PRIUS Saloon (NHW11_)	05/00→01/04					A60	A43					
RAV 4 I Cabrio (SXA1_)	12/97→06/00					A51	A45					
+ Spoiler						AS51		AS5145				
RAV 4 II (CLA2_, XA2_, ZCA2_, ACA2_)	06/00→11/05					A60	A48			AP30A		
+ Spoiler						AS60		AS6048				
				AFL6048L	L							
RAV 4 III (ACA3_, ACE_, ALA3_, GSA3_, ZSA3_)	06/05→											
				AFL6040L	L					AP30A		
Hybrid Blade						AHL60	AHL40					
RAV 4 IV (WWA4_, AVA4_, ZSA4_, ALA4_)	12/12→											
				AFL6540L	L					AP30A		
Hybrid Blade						AHL65	AHL40					
SIENNA (MCL10_)	08/97→12/02					A60	A45					
+ Spoiler						AS60						

A	B	C	D	E	F	G	H	J	K	L	M
CR1211 CR1206	CR1211 CR1203 CR1214	CR1211 CR1203 CR1214	CR1208	CR1202 CR1213	CR1209	CR1207	Special	Special	Special	Special	CR3007

...TOYOTA												
SIENNA (MCL2_, GSL2_)	01/03→12/09					A65	A48			
+ Spoiler						AS65				
SIENNA (ASL3_, GSL3_)	01/10→									
				AFL6545L	L					
Hybrid Blade						AHL65	AHL45			
STARLET (EP91)	01/96→10/99					A51	A43		A41	
+ Spoiler						AS51				
URBAN CRUISER (NSP1_, NLP1_, ZSP1_, NCP11_)	07/07→									
				AFL6035L	L					
Hybrid Blade						AHL60	AHL35			
VENZA (GGV1_, AGV1_)	11/08→									
Hybrid Blade						AHL65	AHL55			
VERSO (_AUR2_, WAR2_, _ZGR2_)	04/09→									
				AFL6540L	L				AP30A	
Hybrid Blade						AHL65	AHL40			
VERSO S (NLP12_, NCP12_, NSP12_)	11/10→10/16									
x 1						A70				
VIOS/YARIS Saloon (ZSP9_, NCP9_)	08/05→					A60	A36			
+ Spoiler						AS60				
				AFL6035L	L					
YARIS (SCP1_, NLP1_, NCP1_)	01/99→12/05					A53	A36		AP29	
+ Spoiler						AS53				
YARIS (SCP9_, NSP9_, KSP9_, NCP9_, ZSP9_)	01/05→					A60	A36		AP30A	
+ Spoiler						AS60			AP31	
				AFL6035L	L					
YARIS (NHP13_, NSP13_, NCP13_, KSP13_, NLP13_)	12/10→									
x 1						A70			AP30A	
YARIS VERSO (_NLP2_, _NCP2_)	08/99→09/05					A55	A41		A41	→11/02
+ Spoiler						AS55		AS5541	AP40A	12/02→
				AFL5540L	L					
TOYOTA										
AURIS VAN Box (NDE18_)	03/13→									
				AFL6535L	L					
Hybrid Blade						AHL65	AHL35			
DYNA 150 Platform/Chassis ('95) (LY_)	05/95→07/01					A43	A43			
DYNA 150 Platform/Chassis ('00)	01/00→11/08					A43	A43			
DYNA 200 Platform/Chassis ('95)	06/95→07/01					A43	A43			
DYNA 250 Platform/Chassis	06/95→07/01					A51	A51			

A	B	C	D	E	F	G	H	J	K	L	M
CR1211 CR1206	CR1211 CR1203 CR1214	CR1211 CR1203 CR1214	CR1208	CR1202 CR1213	CR1209	CR1207	Special	Special	Special	Special	CR3007

AEROVANTAGE

...TOYOTA												
DYNA 300 Platform/Chassis	06/95→12/02					A51	A51			
DYNA 400 Platform/Chassis (XZU_)	10/00→12/06					A51	A51			
DYNA Platform/Chassis (KD_, LY_, TRY2_, KDY2_, XZU4_, XZU3_,	08/01→					A51	A51			
HIACE / COMMUTER V (TRH2_, KDH2_)	08/04→					A53	A53			
+ Spoiler						AS53				
HIACE IV Box (LXH1_, RZH1_, LH1_)	08/95→					A53			A45	
+ Spoiler						AS53				
HIACE IV Bus (LH1_)	08/95→					A53	A53		A45	
+ Spoiler						AS53				
HIACE IV Platform/Chassis (LXH1_, RCH1_, KLH1_)	08/95→					A53	A53			
+ Spoiler						AS53				
HIACE V Box (TRH2_, KDH2_)	08/04→					A53	A53			
+ Spoiler						AS53				
HILUX VIII Platform/Chassis (_N1_)	05/15→					A55	A41			
+ Spoiler						AS55		AS5541		
				AFL5540L	L					
PROACE Box	02/16→									
		AFL65	AFL48	AFL6548G	G					
PROACE Box Body / Estate	06/13→03/16					A70	A51			
+ Spoiler						AS70				
PROACE Bus	02/16→									
		AFL65	AFL48	AFL6548G	G					
TOWN ACE Bus	05/95→10/01					A55+AK1	A36+AK1			
VOLVO										
C30	09/06→12/13									
		AFL65	AFL50	AFL6550A	A					
C70 I Convertible	03/98→10/05					A53	A53			
+ Spoiler						AS53				
				AFL5353L	L					
C70 I Coupe	03/97→09/02					A53	A53			
+ Spoiler						AS53				
				AFL5353L	L					
C70 II Convertible	03/06→12/13									
		AFL65	AFL48	AFL6548A	A					
S40 I (VS)	07/95→06/04					A53	A51			
+ Spoiler						AS53				
				AFL5350L	L					

A	B	C	D	E	F	G	H	J	K	L	M
CR1211 CR1206	CR1211 CR1203 CR1214	CR1211 CR1203 CR1214	CR1208	CR1202 CR1213	CR1209	CR1207	Special	Special	Special	Special	CR3007

CHAMPION

...VOLVO

S40 II (MS)	01/04→12/12										
→07/05		AFL65	AFL50	AFL6550A	E						
08/05→		AFL65	AFL50	AFL6550A	A						
S60 I	07/00→04/10										
→07/04						A60	A55				
→07/04	+ Spoiler					AS60					
→07/04								ASC6055			
→07/04				AFL6053L	L						
08/04→		AFL60	AFL55	AFL6055B	B						
S60 II	04/10→										
		AFL65	AFL50	AFL6550A	A						
S70 (LS)	11/96→11/00					A53	A53				
	+ Spoiler					AS53					
				AFL5353L	L						
S80 I (TS, XY)	05/98→02/08										
→07/04						A60	A55				
→07/04	+ Spoiler					AS60					
→07/04								ASC6055			
→07/04				AFL6053L	L						
08/04→		AFL60	AFL55	AFL6055B	B						
S80 II (AS)	03/06→										
		AFL65	AFL50	AFL6550A	A						
S90	11/96→12/98					A53	A53				
	+ Spoiler					AS53					
				AFL5353L	L						
S90 II	03/16→										
		AFL63	AFL50	AFL6050F	F						
V40 Estate (VW)	07/95→06/04					A53	A51		A41	→04/00	
	+ Spoiler					AS53					
				AFL5350L	L						
V40 Hatchback	03/12→										
		AFL65	AFL48	AFL6548A	A				AF28X		
V50 (MW)	12/03→12/12										
→07/05		AFL65	AFL50	AFL6550A	E				A36		
08/05→		AFL65	AFL50	AFL6550A	A						
V60	07/10→										
		AFL65	AFL50	AFL6550A	A				A30	→05/15	
									AP31	06/15→	
V70 I (LV)	12/95→12/00					A53	A53		A43		
	+ Spoiler					AS53					
				AFL5353L	L						

	A	B	C	D	E	F	G	H	J	K	L	M
	CR1211 CR1206	CR1211 CR1203 CR1214	CR1211 CR1203 CR1214	CR1208	CR1202 CR1213	CR1209	CR1207	Special	Special	Special	Special	CR3007

AEROVANTAGE

...VOLVO											
V70 II (SW)	11/99→12/08										
→07/04							A60	A55		A41	→07/03
→07/04	+ Spoiler						AS60			AP37C	08/03→
→07/04									ASC6055		
→07/04				AFL6053L	L						
08/04→		AFL60	AFL55	AFL6055B	B						
V70 III (BW)	04/07→										
		AFL65	AFL50	AFL6550A	A						
V90 Estate	11/96→12/98						A53	A53		A36	
	+ Spoiler						AS53				
				AFL5353L	L						
V90 II	03/16→										
		AFL63	AFL50	AFL6050F	F						
XC40 (536)	10/17→										
		AFL60	AFL50	AFL6050F	F						
XC60	05/08→										
		AFL65	AFL50	AFL6550A	A					AP37C	08/10→07/15
XC70 CROSS COUNTRY	10/97→10/07										
→07/04							A60	A55		A41	→07/03
→07/04	+ Spoiler						AS60			AP37C	08/03→
→07/04									ASC6055		
→07/04				AFL6053L	L						
08/04→		AFL60	AFL55	AFL6055B	B						
XC70 II	04/07→										
		AFL65	AFL50	AFL6550A	A						
XC90 I	06/02→12/14										
→07/04							A60	A55		A41	→07/03
→07/04	+ Spoiler						AS60			AP37C	08/10→
→07/04									ASC6055		
→07/04				AFL6053L	L						
08/04→		AFL60	AFL55	AFL6055B	B						
XC90 II	09/14→										
		AFL63	AFL50	AFL6050F	F						
VW											
AMAROK (2H_, S1B)	09/10→										
→04/12							A60	A58			
→04/12	+ Spoiler						AS60				
05/12→		AFL60	AFL60		F						
ARTEON (3H7)	04/17→										
		AFL65	AFL48	AFL6548F	F						

A	B	C	D	E	F	G	H	J	K	L	M
CR1211 CR1206	CR1211 CR1203 CR1214	CR1211 CR1203 CR1214	CR1208	CR1202 CR1213	CR1209	CR1207	Special	Special	Special	Special	CR3007

CHAMPION

...VW

BEETLE (5C1)	04/11→										
		AFL53	AFL53	AFL5353F	F						
BEETLE Convertible (5C7)	12/11→										
		AFL53	AFL53	AFL5353F	F						
BORA (1J2)	10/98→09/05										
→05/02						A53	A48				
→05/02 + Spoiler						AS53		AS5348			
→05/02								ASC5348			
→05/02				AFL5348L	L						
06/02→		AFL53	AFL48A		E						
BORA Estate (1J6)	05/99→05/05										
→05/02						A53	A48		A38		
→05/02 + Spoiler						AS53		AS5348			
→05/02								ASC5348			
→05/02				AFL5348L	L						
06/02→		AFL53	AFL48A		E						
CADDY ALLTRACK Estate (SAB)	05/15→										
		AFL60	AFL45	AFL6045A	A				AF40		
CADDY II Estate (9K9B)	11/95→01/04					A53	A45		A45		
+ Spoiler						AS53		AS5345			
				AFL5345L	L						
CADDY II Pickup (9U7)	06/96→12/00					A53	A45				
+ Spoiler						AS53		AS5345			
				AFL5345L	L						
CADDY III Estate (2KB, 2KJ, 2CB, 2CJ)	03/04→05/15										
→05/06		AFL60	AFL45	AFL6045A	E				AF38X		
06/06→		AFL60	AFL45	AFL6045A	A						
CADDY IV Estate (SAB, SAJ)	05/15→										
		AFL60	AFL45	AFL6045A	A				AF40		
CC (358)	11/11→12/16										
		AFL60	AFL48	AFL6048F	F						
EOS (1F7, 1F8)	03/06→08/15										
		AFL60	AFL48	AFL6048A	A						
FOX (5Z1, 5Z3)	10/03→					A53	A38		AP30V		
+ Spoiler						AS53					
GOLF ALLTRACK (BA5)	12/14→										
		AFL65	AFL45	AFL6545F	F				AF28		
GOLF IV (1J1)	08/97→06/05										
→05/02						A53	A48		A36		
→05/02 + Spoiler						AS53		AS5348			
→05/02								ASC5348			
→05/02				AFL5348L	L						
06/02→		AFL53	AFL48A		E						

A	B	C	D	E	F	G	H	J	K	L	M
CR1211 CR1206	CR1211 CR1203 CR1214	CR1211 CR1203 CR1214	CR1208	CR1202 CR1213	CR1209	CR1207	Special	Special	Special	Special	CR3007

...VW												
GOLF IV Cabriolet (1E7)	06/98→06/02					A53	A48			
+ Spoiler						AS53		AS5348		
								ASC5348		
				AFL5348L	L					
GOLF IV Variant (1J5)	05/99→06/06									
→05/02						A53	A48		A38	
→05/02 + Spoiler						AS53		AS5348		
→05/02								ASC5348		
→05/02				AFL5348L	L					
06/02→		AFL53	AFL48A		E					
GOLF V (1K1)	10/03→02/09									
→10/05		AFL60	AFL48	AFL6048E	E				AF33X	
11/05→		AFL60	AFL48	AFL6048A	A					
GOLF V Variant (1K5)	06/07→07/09									
		AFL60	AFL48	AFL6048A	A				AF33X	
GOLF VI (5K1)	10/08→11/13									
		AFL60	AFL48	AFL6048A	A				AF28	
GOLF VI Convertible (517)	03/11→									
		AFL60	AFL48	AFL6048F	F					
GOLF VI Variant (AJ5)	07/09→07/13									
		AFL60	AFL48	AFL6048A	A				AF33X	
GOLF VII (5G1, BE1)	08/12→									
		AFL65	AFL45	AFL6545F	F				AF28	
GOLF VII Estate (BA5)	04/13→									
		AFL65	AFL45	AFL6545F	F				AF28	
GOLF PLUS (5M1, 521)	01/05→12/13									
		AFL70	AFR70	AFU7070E	E				AF33X	→12/08
									AF34	01/09→
GOLF SPORTSVAN (AM1)	02/14→									
		AFL70	AFL40	AFL7040A	F				AF34	
JETTA III (1K2)	08/05→10/10									
		AFL60	AFL48	AFL6048A	A					
JETTA IV (162, 163)	04/10→									
		AFL60	AFL48	AFL6048F	F					
LUPO (6X1, 6E1)	09/98→07/05									
→05/03						A53	A48		A29	
→05/03 + Spoiler						AS53		AS5348		
→05/03								ASC5348		
06/03→		AFL48	AFL45		E					

A	B	C	D	E	F	G	H	J	K	L	M
CR1211 CR1206	CR1211 CR1203 CR1214	CR1211 CR1203 CR1214	CR1208	CR1202 CR1213	CR1209	CR1207	Special	Special	Special	Special	CR3007

AEROVANTAGE

VW

...VW

MULTIVAN V (7HM, 7HN, 7HF, 7EF, 7EM, 7EN)	04/03→08/15										
→05/13						A60	A55		AF38X	
→05/13 + Spoiler						AS60				
→05/13								ASC6055		
→05/13		AFL60	AFL60	AFL6060E	E					
06/13→		AFL60	AFL60		F					
MULTIVAN VI (SGF, SGM, SGN)	04/15→									
		AFL60	AFL60		F				AF40	
NEW BEETLE (9C1, 1C1)	01/98→09/10					A53	A53			
+ Spoiler						AS53				
								ASC5353		
NEW BEETLE Convertible (1Y7)	09/02→10/10					A53	A53			
+ Spoiler						AS53				
								ASC5353		
PASSAT (3B2)	08/96→12/01					A53	A53			
+ Spoiler						AS53				
PASSAT (3B3)	11/00→05/05									
→05/02						A53	A53			
→05/02 + Spoiler						AS53				
→05/02								ASC5353		
06/02→		AFL53	AFL53A		E					
PASSAT (3C2)	03/05→11/10									
		AFL60	AFL48	AFL6048A	A					
PASSAT (362)	08/10→12/14									
→08/11		AFL60	AFL48	AFL6048A	A					
09/11→		AFL60	AFL48	AFL6048F	F					
PASSAT (A32, A33)	01/11→									
		AFL60	AFL48	AFL6048F	F					
PASSAT (3G2)	08/14→									
		AFL65	AFL48	AFL6548F	F					
PASSAT ALLTRACK (365)	01/12→12/14									
		AFL60	AFL48	AFL6048F	F				AF28X	
PASSAT ALLTRACK (3G5)	05/15→									
		AFL65	AFL48	AFL6548F	F				AF34	
PASSAT CC (357)	05/08→01/12									
		AFL60	AFL48	AFL6048A	A					
PASSAT Estate (3B5)	05/97→12/01					A53	A53		A41	
+ Spoiler						AS53				
PASSAT Variant (3B6)	10/00→08/05									
→05/02						A53	A53		A38	
→05/02 + Spoiler						AS53				
→05/02								ASC5353		
06/02→		AFL53	AFL53A		E					

	A	B	C	D	E	F	G	H	J	K	L	M
	CR1211 CR1206	CR1211 CR1203 CR1214	CR1211 CR1203 CR1214	CR1208	CR1202 CR1213	CR1209	CR1207	Special	Special	Special	Special	CR3007

CHAMPION

...VW

PASSAT Variant (3C5)	08/05→10/11											
		AFL60	AFL48	AFL6048A	A					AF28X		
PASSAT Variant (365)	08/10→12/14											
→08/11		AFL60	AFL48	AFL6048A	A					AF28X		
09/11→		AFL60	AFL48	AFL6048F	F							
PASSAT Variant (3G5)	08/14→											
		AFL65	AFL48	AFL6548F	F					AF34		
PHAETON (3D_)	04/02→03/16											
		AFL60	AFL53		E							
POLO (6N2)	10/99→10/01					A48	A48			A29		
+ Spoiler						AS48		AS4848				
POLO (9N_)	10/01→01/12											
→05/02						A53	A48			A33	→05/02	
→05/02 + Spoiler						AS53		AS5348		AF33X	06/02→03/05	
→05/02								ASC5348		AF28X	04/05→	
→05/02				AFL5348L	L							
06/02→03/05		AFL53	AFL48A		E							
04/05→		AFL53	AFL48	AFL5348A	A							
POLO (6R, 6C)	06/09→											
		AFL60	AFL40	AFL6040F	F					AF28		
POLO (AW1, BZ1)	06/17→											
		AFL65	AFL45	AFL6545F	F					AF28		
POLO CLASSIC (6KV2)	11/95→07/06					A53	A45					
+ Spoiler						AS53		AS5345				
								ASC5348				
				AFL5345L	L							
POLO Saloon (9N4)	09/02→12/10											
→03/05		AFL53	AFL48A		E							
04/05→		AFL53	AFL48	AFL5348A	A							
POLO Saloon (9A4)	09/02→											
→03/05		AFL53	AFL48A		E							
04/05→		AFL53	AFL48	AFL5348A	A							
POLO Saloon (602, 604, 612, 614)	05/09→					A60	A41					
+ Spoiler						AS60						
				AFL6040L	L							
POLO Variant (6KV5)	04/97→09/01					A53	A45					
+ Spoiler						AS53		AS5345				
								ASC5348				
				AFL5345L	L							

A	B	C	D	E	F	G	H	J	K	L	M
CR1211 CR1206	CR1211 CR1203 CR1214	CR1211 CR1203 CR1214	CR1208	CR1202 CR1213	CR1209	CR1207	Special	Special	Special	Special	CR3007

VW

...VW

POLO VIVO Hatchback	02/10→					A53	A45			
+ Spoiler						AS53		AS5345		
								ASC5348		
				AFL5345L	L					
POLO VIVO Saloon	02/10→					A53	A45			
+ Spoiler						AS53		AS5345		
								ASC5348		
				AFL5345L	L					
SCIROCCO (137, 138)	05/08→11/17									
		AFL60	AFL48	AFL6048A	A				AF25	
SHARAN (7M8, 7M9, 7M6)	05/95→03/10									
→10/01								A7065	A41	
11/01→		AFL70	AFR70	AFU7070E	E					
SHARAN (7N1, 7N2)	05/10→									
		AFL70	AFL40	AFL7040A	F				AF34	
TIGUAN (5N_)	09/07→									
		AFL60	AFL53	AFL6053A	A				AF33X	
TIGUAN (AD1)	01/16→									
		AFL63	AFL55	AFL6553F	F				AF34	
TIGUAN ALLSPACE (BW2)	03/17→									
		AFL63	AFL55	AFL6553F	F				AF34	
TOUAREG (7LA, 7L6, 7L7)	10/02→05/10									
		AFL65	AFL65	AFL6565E	E				AF33X	
TOUAREG (7P5)	01/10→									
		AFL65	AFL65	AFL6565E	E				AF37Y	
TOURAN (1T1, 1T2)	02/03→05/10									
		AFL70	AFR70	AFU7070E	E				AF38X	
→10/06		AFL60	AFL45	AFL6045A	E					
11/06→		AFL60	AFL45	AFL6045A	A					
TOURAN (1T3)	05/10→05/15									
		AFL60	AFL45	AFL6045A	A				AF34	
TOURAN (5T1)	05/15→									
		AFL70	AFL40	AFL7040A	F				AF28	
T-ROC (A11)	11/17→									
		AFL65	AFL48	AFL6548F	F				AF34	
UP	08/11→									
		AFL60	AFL40	AFL6040F	F				AF25	
VENTO	01/10→									
		AFL60	AFL40	AFL6040F	F					

A	B	C	D	E	F	G	H	J	K	L	M
CR1211 CR1206	CR1211 CR1203 CR1214	CR1211 CR1203 CR1214	CR1208	CR1202 CR1213	CR1209	CR1207	Special	Special	Special	Special	CR3007

CHAMPION

AEROVANTAGE

VW

AMAROK Platform/Chassis (S1B)	09/11→											
→04/12							A60	A58				
→04/12 + Spoiler							AS60					
05/12→		AFL60	AFL60		F							
CADDY ALLTRACK Box (SAA)	05/15→											
		AFL60	AFL45	AFL6045A	A					AF40		
CADDY II Box (9K9A)	11/95→01/04					A53	A45			A45		
+ Spoiler						AS53		AS5345				
				AFL5345L	L							
CADDY III Box (2KA, 2KH, 2CA, 2CH)	03/04→05/15											
→05/06		AFL60	AFL45	AFL6045A	E					AF38X		
06/06→		AFL60	AFL45	AFL6045A	A							
CADDY IV Box (SAA, SAH)	05/15→											
		AFL60	AFL45	AFL6045A	A					AF40		
CRAFTER 30-35 Bus (2E_)	04/06→12/16											
		AFL65	AFL60	AFL6560B	B					AF38Z		
CRAFTER 30-50 Box (2E_)	04/06→12/16											
		AFL65	AFL60	AFL6560B	B					AF38Z		
CRAFTER 30-50 Platform/Chassis (2F_)	04/06→12/16											
		AFL65	AFL60	AFL6560B	B							
CRAFTER Box (SY_)	09/16→											
		AFL70	AFL65		F							
CRAFTER Bus (SY_)	09/16→											
		AFL70	AFL65		F							
CRAFTER Platform/Chassis (SZ_)	11/16→											
		AFL70	AFL65		F							
GOLF IV Van (1J1)	05/00→05/04											
→05/02						A53	A48			A36		
06/02→		AFL53	AFL48A		E							
LOAD UP	12/14→											
		AFL60	AFL40	AFL6040F	F					AF25		
LT 28-35 II Bus (2DB, 2DE, 2DK)	04/96→07/06					A60	A55					
LT 28-46 II Box (2DA, 2DD, 2DH)	04/96→07/06					A60	A55					
LT 28-46 II Platform/Chassis (2DC, 2DF, 2DG, 2DL, 2DM)	04/96→07/06					A60	A55					
POLO Van (6R)	01/14→											
		AFL60	AFL40	AFL6040F	F					AF28		

A	B	C	D	E	F	G	H	J	K	L	M
CR1211 CR1206	CR1211 CR1203 CR1214	CR1211 CR1203 CR1214	CR1208	CR1202 CR1213	CR1209	CR1207	Special	Special	Special	Special	CR3007

...VW

TRANSPORTER V Box (7HA, 7HH, 7EA, 7EH) 04/03→08/15										
→05/13						A60	A55		AF38X	
→05/13 + Spoiler						AS60				
→05/13								ASC6055		
→05/13	AFL60	AFL60	AFL6060E	E						
06/13→	AFL60	AFL60		F						
TRANSPORTER V Bus (7HB, 7HJ, 7EB, 7EJ, 7EF, 7EG, 7HF, 7EC) 04/03→08/15										
→05/13						A60	A55		AF38X	
→05/13 + Spoiler						AS60				
→05/13								ASC6055		
→05/13	AFL60	AFL60	AFL6060E	E						
06/13→	AFL60	AFL60		F						
TRANSPORTER V Platform/Chassis (7JD, 7JE, 7JL, 7JY, 7JZ, 7FD 04/03→08/15										
→05/13						A60	A55			
→05/13 + Spoiler						AS60				
→05/13								ASC6055		
→05/13	AFL60	AFL60	AFL6060E	E						
06/13→	AFL60	AFL60		F						
TRANSPORTER VI Box (SGA, SGH) 04/15→										
	AFL60	AFL60		F					AF40	
TRANSPORTER VI Bus (SGB, SGG, SGJ) 04/15→										
	AFL60	AFL60		F					AF40	
TRANSPORTER VI Platform/Chassis (SFD, SFE, SFL, SFZ) 04/15→										
	AFL60	AFL60		F						

A	B	C	D	E	F	G	H	J	K	L	M
CR1211 CR1206	CR1211 CR1203 CR1214	CR1211 CR1203 CR1214	CR1208	CR1202 CR1213	CR1209	CR1207	Special	Special	Special	Special	CR3007

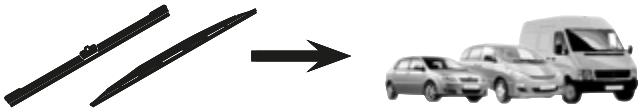

A29

CHEVROLET
CAPTIVA (C100, C140) 06/06→

CITROËN
2 CV 03/63→08/91
ACADIANE 08/78→10/88
DYANE 08/67→10/84
MEHARI 05/68→10/87

DAIHATSU
CHARADE (L2_) 03/03→
CUORE IV (L501) 08/94→12/99
CUORE V (L5) 11/96→10/98
CUORE V (L7_) 10/98→05/03
CUORE VI (L251, L250_, L260_) 03/03→
CUORE VII (L275_, L285_, L276_) 12/06→
GRAN MOVE (G3) 10/96→
MIRA III 08/90→04/95
MOVE (L6_, L9_) 09/98→09/02
TAFT/WILDCAT ('76) 09/76→02/85
TAFT/WILDCAT ('84) 04/84→04/93
TAFT/WILDCAT ('93) 05/93→06/01
TERIOS (J1_) 05/97→10/06
WILDCAT/ROCKY (F70) 02/85→04/87

DODGE
CALIBER 06/06→

FIAT
500 01/57→01/76
CINQUECENTO (170_) 07/91→07/99
DUNA Weekend (146_) 01/87→10/01

FORD
C-MAX (DM2) 02/07→09/10
ECOSPORT 09/11→
FIESTA V (JH_, JD_) 11/01→03/10
FIESTA V Van 10/03→12/10
FOCUS C-MAX 10/03→03/07
FOCUS Estate (DNW) 02/99→12/07
FOCUS II Estate (DA_) 07/04→09/12
FUSION (JU_) 08/02→12/12
MAVERICK 02/01→
MONDEO III Estate (BWY) 10/00→03/07

HONDA
CIVIC VII Coupe (EM2) 02/01→12/05
CR-V I (RD) 10/95→02/02
CR-V II (RD_) 09/01→12/06
FR-V (BE) 08/04→

JEEP
CHEROKEE (KJ) 03/01→01/08
CJ5 - CJ8 01/66→12/87
COMPASS (MK49) 08/06→
GRAND CHEROKEE I (ZJ) 09/91→04/99
GRAND CHEROKEE II (WJ, WG) 09/98→09/05
LIBERTY 01/08→

KIA
CARENS II (FJ) 07/02→

LADA
111 01/95→
1200-1500 Estate 09/73→
NIVA (2121) 12/76→
NIVA II (2123) 09/02→
RIVA Estate 09/81→04/12

LAND ROVER
88/109 (LR_) 09/61→12/86
88/109 Hardtop (LR_) 09/63→12/86

MAZDA
TRIBUTE (EP) 03/00→05/08

MG
MGB Convertible 05/62→12/81
MGB GT 07/65→11/80
MGC 01/67→09/69
MGC GT 01/67→09/69
MGR V8 09/92→12/95
MIDGET 01/64→12/79

MITSUBISHI
COLT CZC Convertible (RG) 05/06→07/09
COLT VI (Z3_A, Z2_A) 10/02→12/12

...A29

NISSAN
PATHFINDER II (R50) 09/95→07/05
PATROL GR IV (Y60, GR) 08/87→02/98
PATROL III/1 Station Wagon (W160) 11/79→02/89
PATROL III/2 Station Wagon (W260) 08/88→04/98
SUNNY III Hatchback (N14) 10/90→07/95
TERRANO II (R20) 10/92→09/07
TERRANO II Van (R20) 06/98→09/07

OPEL
FRONTERA A (5_MWL4) 03/92→10/98

PEUGEOT
306 Break (7E, N3, N5) 06/94→04/02

RENAULT
4 (112_) 04/62→12/93
4 Box (R21_, R23_) 09/66→12/93

ROVER
CITYROVER 09/03→12/05
MINI 01/91→11/00
MINI Convertible (XN) 09/92→05/01

SEAT
AROSA (6H) 05/97→06/04
CORDOBA Vario (6K5) 08/96→12/02
LEON (1P1) 05/05→12/12
TOLEDO III (5P2)

SSANGYONG
KORANDO (K4) 12/88→05/97
KORANDO (KJ) 12/96→11/06
RODIUS 05/05→
STAVIC 02/05→

SUBARU
JUSTY III (G3X) 09/03→

SUZUKI
ALTO (HA24) 09/04→12/09
JIMNY (FJ) 07/98→
LIANA Estate (ER) 07/01→12/07
SAMURAI (SJ) 11/88→12/04
SAMURAI Open Off-Road Vehicle (SJ) 04/88→12/04
SJ 410 09/79→12/88
SJ 410 Cabrio 09/81→12/88
SJ 413 09/84→03/91
WAGON R+ (EM) 10/97→10/00

TOYOTA
CAMRY Station Wagon (_XV1_, _CV1_, _V10) 06/91→08/97

VW
1500,1600 (31) 04/61→12/73
KAEFER 12/47→08/03
LUPO (6X1, 6E1) 09/98→07/05
POLO (6N1) 10/94→10/99
POLO (6N2) 10/99→10/01
POLO (86C, 80) 10/81→09/94

A30

VOLVO
V60 07/10→

A33

ALFA ROMEO
1750-2000 (105_) 03/68→07/75
GIULIA GT 01/62→12/80
GTV (116_) 01/78→02/87
SPIDER (105_) 03/66→12/77

AUDI
A3 (8P1) 05/03→08/12
A3 Sportback (8PA) 09/04→03/13
A4 Avant (8ED, B7) 11/04→06/08
Q7 (4L) 03/06→08/15

BMW
Z3 Coupe (E36) 04/97→06/03

CITROËN
DS 05/59→08/75

DACIA
1310 Estate 05/83→07/04

...A33

DACIA
1310 Saloon (U, X) 05/83→07/04

DAIHATSU
CHARADE 05/11→
CHARADE I (G10) 10/77→05/84
CHARADE II (G11, G30) 01/83→05/87
CHARADE III (G100, G101, G102) 01/87→07/93
HIJET Box 06/86→10/90
HIJET Box (S85) 12/92→
HIJET Bus 06/86→06/90
HIJET Bus (S85) 06/93→
SIRION (M1) 04/98→04/05
SPARCAR Box (S7_) 07/82→06/86
SPARCAR Bus (S7_) 07/82→06/86

FIAT
126 09/72→09/00
PANDA (141_) 03/80→07/04
PANDA Van (141_) 01/86→02/04
UNO (146_) 01/83→06/06
UNO Box (146_) 02/88→07/96

FORD
CORTINA ('80) 07/79→07/82
MAVERICK (UDS, UNS) 02/93→04/98
MONDEO I Estate (BNP) 01/93→08/96
MONDEO II Estate (BNP) 08/96→09/00
SIERRA Estate (BNC) 08/82→12/86
SIERRA Estate (BNG) 01/87→02/93
TOURNEO CONNECT 06/02→12/13
TRANSIT Box (E_ _) 06/94→07/00
TRANSIT Bus (E_ _) 01/91→07/00
TRANSIT CONNECT (P65_, P70_, P80_) 06/02→

HONDA
ACTY (TN) 08/79→09/86
JAZZ I (AA) 10/83→10/86
STREAM (RN) 05/01→

HYUNDAI
AMICA 01/97→
SANTA FÉ I (SM) 11/00→03/06

JEEP
CHEROKEE (XJ) 09/83→09/01
WRANGLER I (YJ, SJ_) 08/86→08/96
WRANGLER II (TJ) 08/96→12/08

KIA
RIO Estate (DC) 07/00→02/05
SPORTAGE (JE_, KM_) 09/04→

LADA
1200-1500 Estate 09/73→
1200-1600 01/70→12/05
2107 05/82→
KALINA Estate (2194) 11/13→
KALINA Hatchback (2192) 06/13→
NIVA (2121) 12/76→
RIVA 05/81→04/12
RIVA Estate 09/81→04/12
SAMARA (2108, 2109, 2115) 01/86→12/13
SAMARA Hatchback (2113, 2114, 2115) 03/97→12/13
TOSCANA (2107) 05/82→05/12

LANCIA
Y10 (156_) 03/85→12/95

LAND ROVER
90/110 (DHMC) 09/83→07/90
DEFENDER Cabrio (LD_) 08/90→02/16
DEFENDER Pickup (LD_) 10/95→02/16
DEFENDER Platform/Chassis (LD_) 09/90→02/16
DEFENDER Station Wagon (LD_) 08/90→02/16

MAZDA
626 V Station Wagon (GW) 01/98→12/02
PREMACY (CP) 07/99→03/05

MERCEDES-BENZ
A-CLASS (W168) 07/97→08/04
CITAN Box (415) 11/12→
CITAN Combi (415) 11/12→

...A33

MERCEDES-BENZ
CITAN Mixto (415) 11/12→

MITSUBISHI
LANCER III Station Wagon (C1_V, C3_V) 09/85→08/92
PAJERO / SHOGUN SPORT I (K90) 07/96→
SPACE STAR MPV (DG_A) 06/98→12/04

NISSAN
BLUEBIRD Station Wagon (WU11) 11/83→12/90
SUNNY III Traveller (Y10) 11/90→03/00

OPEL
AGILA (A) (H00) 09/00→12/07
CORSA B (73_, 78_, 79_) 03/93→12/02
FRONTERA B (6B_) 10/98→09/02
OMEGA A Estate (66_, 67_) 09/86→05/94
OMEGA B Estate (21_, 22_, 23_) 03/94→07/03
VECTRA B Estate (31_) 11/96→07/03

PEUGEOT
405 I Break (15E) 06/87→08/92
405 II Break (4E) 08/92→10/98

PORSCHE
911 Speedster (964) 08/92→06/94
911 Targa 11/64→11/90
911 Targa (964) 12/88→09/93
914 01/69→02/76
959 01/86→04/91

RENAULT
5 (122_) 01/72→12/85
5 Box (238_) 01/72→12/85
KANGOO BE BOP (KW0/1_) 02/09→
KANGOO Express (FW0/1_) 02/08→
KANGOO / GRAND KANGOO (KW0/1_) 02/08→

SAAB
95 Station Wagon 02/60→12/78
96 09/60→08/80

SEAT
ALTEA (5P1)
ALTEA XL (5P5, 5P8)
IBIZA II (6K1) 03/93→02/02
IBIZA III (6K1) 08/99→02/02
IBIZA IV (6L1) 02/02→11/09
IBIZA V (6J5, 6P1) 03/08→
IBIZA V SPORTCOUPE (6J1, 6P5) 07/08→
IBIZA V ST (6J8, 6P8) 03/10→
MARBELLA (28) 08/86→10/98
MARBELLA Box (028A) 11/86→12/93
PANDA (141A) 10/80→12/86

SKODA
OCTAVIA Combi (1U5) 07/98→12/10

SMART
CITY-COUPE (450) 07/98→01/04
FORTWO Coupe (450) 01/04→02/07

SUBARU
VIVIO 03/92→04/00

SUZUKI
ALTO (HA11) 10/93→09/98
ALTO (HA12, HA23) 10/97→09/04
CARRY Box 10/95→03/99
CARRY Box (ST90V) 10/79→10/85
CARRY Platform/Chassis (ST80K) 10/79→03/85
SUPER CARRY Bus (ED) 07/85→03/99
WAGON R 07/03→05/08
WAGON R+ (MM) 05/00→

TOYOTA
CAMRY Station Wagon (_V2_) 11/86→02/93
LAND CRUISER (BJ4_) 01/68→11/01

VOLVO
240 Kombi (P245) 08/74→12/93
260 Estate (P265) 07/75→07/82

VW
GOLF III (1H1) 08/91→07/98
GOLF III Van (1H1) 08/91→12/97

...A33

VW

GOLF III Variant (1H5)	07/93→04/99
PASSAT (32B)	11/79→06/89
POLO (9N_)	10/01→01/12

A36

CHEVROLET

BLAZER S10 ('93)	10/93→09/05
BLAZER S10 ('96)	08/96→12/10
MATIZ (M200, M250)	03/05→
SPARK ('05)	05/05→
SPARK (M300) ('09)	12/09→

CITROËN

BERLINGO (MF)	07/96→12/11
BERLINGO Box (M_)	07/96→12/11
LNA	11/76→10/86
ZX Break (N2)	10/93→07/99

DAEWOO

MATIZ (KLYA)	09/98→
MUSSO (FJ)	07/98→
REXTON (GAB_)	04/02→
TICO (KLY3)	02/95→12/00

DAIHATSU

EXTOL Box	07/00→
EXTOL Bus (S22_, S23_)	07/00→11/11
FOURTRAK Hard Top (F7, F8)	06/84→12/98
SPARCAR Box (S7_)	07/82→06/86
SPARCAR Bus (S7_)	07/82→06/86
SPORTRAK Hard Top (F300)	10/88→12/99
TERIOS (J1_)	05/97→10/06
YRV (M2)	02/01→

FIAT

SEDICI (FY_)	06/06→10/14

FORD

ESCORT CLASSIC Turnier (ANL)	02/99→07/00
ESCORT I (AFH, ATH)	01/68→02/76
ESCORT I Estate (ADH)	06/68→03/79
ESCORT II (ATH)	03/73→07/81
ESCORT II Estate	04/75→07/81
ESCORT III (GAA)	09/80→07/86
ESCORT III Estate (AWA)	09/80→12/85
ESCORT IV Estate (AWF, AVF)	10/85→10/90
ESCORT V Estate (GAL, AVL)	07/90→12/92
ESCORT VI Estate (GAL)	09/92→01/95
ESCORT VII Estate (GAL, ANL)	01/95→10/02
FOCUS II (DA_)	07/04→09/12
KA	01/08→
KA (RU8)	10/08→
S-MAX (WA6)	05/06→12/14

HONDA

JAZZ III (GE, GG_, GP_)	10/07→
JAZZ IV (GK)	09/13→
JAZZ Saloon	05/03→

HYUNDAI

ELANTRA Saloon (MD, UD)	09/10→
GALLOPER I	08/91→07/98
GALLOPER II (JK-01)	02/97→12/03
GETZ (TB)	08/02→12/10
LANTRA II Wagon (J-2)	06/95→10/00
MATRIX (FC)	06/01→08/10

KIA

CARENS I (FC)	06/99→10/02
PICANTO (JA)	03/17→
RETONA (CE)	06/99→
SORENTO I (JC)	08/02→

LADA

KALINA Estate (1117)	10/04→
KALINA Hatchback (1119)	10/04→12/13
RIVA	05/81→04/12
RIVA Estate	09/81→04/12

LAND ROVER

FREELANDER 2 (LF_)	10/06→10/14

MAZDA

2 (DE)	07/07→06/15
2 Saloon (DE)	05/10→06/15
323 F VI (BJ)	09/98→05/04

...A36

MAZDA

323 I (FA)	01/77→11/82
323 I Station Wagon (FA)	05/78→05/86
323 II Hatchback (BD)	06/80→10/89
323 III Station Wagon (BW)	01/86→10/98
B-SERIE (PE)	02/77→01/82
E-SERIE Box	05/78→06/84

MERCEDES-BENZ

VIANO (W639)	09/03→
VITO Bus (W639)	09/03→
VITO / MIXTO Box (W639)	09/03→

MG

MG 3	04/11→
MGB Convertible	05/62→12/81
MGB GT	07/65→11/80

MITSUBISHI

CELESTE (A7_)	10/75→06/81
COLT I (A15_A)	12/78→03/84
COLT IV (CA_A)	03/92→04/96
COLT V (CJ_, CP_)	09/95→09/03
MIRAGE Saloon (A10_)	07/13→
MIRAGE Saloon (CK_A)	09/95→07/03
MIRAGE / SPACE STAR Hatchback (A0_A, A05A, LA)	01/12→
SPACE STAR Hatchback (A0_A)	05/12→
SPACE WAGON (D0_V/W)	01/84→01/92

NISSAN

ALMERA I Hatchback (N15)	07/95→01/01
ALMERA II Hatchback (N16)	01/00→
JUKE (F15)	06/10→
MICRA IV (K13)	05/10→
MICRA V (K14)	12/16→
NOTE (E11)	01/05→06/12
PATROL GR IV (Y60, GR)	08/87→02/98
PATROL GR V Wagon (Y61)	06/97→
PIXO (UA0)	03/09→
TIIDA Hatchback	05/04→12/13
TIIDA Hatchback (C11X)	02/06→12/11
TIIDA Saloon (SC11X)	05/04→12/13

OPEL

COMBO Box Body / Estate	10/01→
COMBO Tour	10/01→
KADETT E Estate (35_, 36_, 45_, 46_)	09/84→08/91
KARL	01/15→
VIVARO Box (F7)	08/01→
VIVARO Combi (J7)	08/01→

PEUGEOT

104	10/72→06/88
104 Coupe	09/73→06/88
EXPERT (224)	10/95→12/06
PARTNER Box (5)	04/96→12/15
PARTNER Combispace (5F)	05/96→12/15

PORSCHE

911	01/63→11/90
911 (964)	12/88→09/93
911 (993)	10/93→09/97
911 Convertible	08/82→08/89
911 Convertible (964)	05/89→06/94

PROTON

PERSONA 300 / SATRIA (C9_M)	03/96→07/04
PERSONA 400 / WIRA (C9_S)	01/94→02/08
PERSONA 400 / WIRA Hatchback (C9_C, C9_S)	01/94→02/08
SATRIA / COMPACT (C9_M)	04/96→05/06
WIRA Hatchback	01/00→

RENAULT

5 (122_)	01/72→12/85
5 Box (238_)	01/72→12/85
6 (118_)	10/69→04/87
16 (115_)	09/65→08/80
LAGUNA I Grandtour (K56_)	09/95→08/02
MEGANE I Grandtour (KA0/1_)	03/99→08/03
TRAFIC II Box (FL)	03/01→
TRAFIC II Bus (JL)	03/01→

ROVER

400 Tourer (XW)	09/93→11/98

...A36

ROVER

MONTEGO Estate (XE)	10/84→12/93

SKODA

OCTAVIA (1U2)	09/96→12/10

SSANGYONG

KYRON	05/05→
MUSSO (FJ)	01/93→09/07
REXTON (GAB_)	04/02→
REXTON W	07/12→

SUZUKI

ALTO (HA25, HA35)	01/09→
ALTO (SS80)	03/79→08/84
BALENO Estate (EG)	04/95→04/05
CELERIO	02/14→
IGNIS (FH)	10/00→12/05
IGNIS II	09/03→
LJ 80	11/77→01/84
SX4 (EY, GY)	06/06→
SX4 Saloon (GY)	10/07→

TOYOTA

4 RUNNER (KZN18_, VZN18_, RZN18_)	11/95→11/02
4 RUNNER (RN5_, LN5_, VZN6_, RN7_, RN6_)	07/84→10/89
4 RUNNER (RN10_, VZN13_, VZN10_, RN13_)	08/87→03/96
AVENSIS Station Wagon (_T22_, ZZT22_)	09/97→02/03
COROLLA Saloon (NRE18_, ZRE17_, ZRE18_, NDE18_)	06/13→
COROLLA Wagon (__E11_)	04/97→10/01
FJ CRUISER (GSJ1_)	01/06→
LAND CRUISER 90 (_J9_)	04/95→
LAND CRUISER 100 (FZJ1_, UZJ1_)	01/98→08/07
RAV 4 I (SXA1_)	01/94→09/00
VIOS/YARIS Saloon (ZSP9_, NCP9_)	08/05→
YARIS (SCP1_, NLP1_, NCP1_)	01/99→12/05
YARIS (SCP9_, NSP9_, KSP9_, NCP9_, ZSP9_)	01/05→

VOLVO

740 Kombi (745)	08/84→12/92
760 Kombi (704, 765)	01/82→07/92
940 II Estate (945)	08/94→10/98
940 Kombi (945)	08/90→10/95
960 Kombi (965)	08/90→07/94
V50 (MW)	12/03→12/12
V90 Estate	11/96→12/98

VW

GOLF IV (1J1)	08/97→06/05
GOLF IV Van (1J1)	05/00→05/04

A36+AK1

TOYOTA

LITEACE Box (CM3_V, KM3_V)	01/83→03/98
LITEACE Bus (CM30_G, KM30_G)	10/85→01/92
TOWN ACE Bus	05/95→10/01
TOWN ACE Bus (CR3_, CR2_)	10/82→12/91

A38

ALFA ROMEO

33 (905_)	05/83→12/93
33 (907A_)	01/90→09/94
33 Sportwagon (905A_)	01/84→12/89
33 Sportwagon (907B_)	01/90→09/94
155 (167_)	01/92→12/97

ALPINA

B3 Estate (E36)	04/93→03/99

AUDI

A3 (8L1)	09/96→06/03
A4 Avant (8D5, B5)	11/94→09/01

BMW

3 Touring (E36)	01/95→10/99

CHEVROLET

KALOS	03/05→
TACUMA	03/05→

...A38

CITROËN

LNA	11/76→10/86

DACIA

1300	12/72→05/83
1300 Estate	12/72→05/83
1304 Pickup	06/83→04/04
1309 Pickup	12/94→08/01
1310 Estate	05/83→07/04
1310 Saloon (U, X)	05/83→07/04

DAEWOO

KALOS (KLAS)	09/02→
NUBIRA Wagon (KLAJ)	04/97→
REZZO / TACUMA (KLAU)	06/00→

DAIHATSU

CHARADE IV (G200, G202)	01/93→09/00
CUORE V (L7_)	10/98→05/03
HIJET Box	06/86→10/90
HIJET Box (S85)	12/92→
HIJET Bus	06/86→06/90
HIJET Bus (S85)	06/93→
MOVE (L6_, L9_)	09/98→09/02

FIAT

147	10/76→12/96
CAMPAGNOLA	06/74→10/89
DUCATO Box (280_)	01/82→09/90
DUCATO Panorama (280_)	07/82→08/90
DUCATO Panorama (290_)	01/90→05/94
FIORINO (127_)	10/77→12/87
FIORINO (147_)	01/80→10/93
FIORINO Pick up (147_)	10/77→10/89
RITMO I (138_)	01/78→12/88
RITMO II (138_)	10/82→12/88
TIPO (160_)	07/87→10/97
X 1/9 (128_)	11/72→12/89

FORD

CAPRI III (GECP)	01/78→04/87
CORTINA ('80) Estate	07/79→07/82
FOCUS (DAW, DBW)	10/98→12/07
GRANADA III Estate	05/88→09/94
KA Van (RB)	05/02→05/05
SCORPIO II Estate (GNR, GGR)	10/94→08/98
TOURNEO CONNECT	06/02→12/13
TRANSIT CONNECT (P65_, P70_, P80_)	06/02→
TRANSIT TOURNEO ('94)	08/94→12/00

HONDA

ACCORD III Aerodeck (CA)	11/85→12/89
ACCORD V Aerodeck (CE)	04/93→02/98
CIVIC III Hatchback (AL, AJ, AG, AH)	10/83→10/87
CIVIC IV Hatchback (EC, ED, EE)	09/87→10/93
CIVIC VI Aerodeck (MB, MC)	04/98→02/01
CIVIC VI Hatchback (EJ, EK)	10/95→02/01
CIVIC VII Hatchback (EU, EP, EV)	03/99→02/06
CIVIC VII Saloon (ES)	10/00→04/06
JAZZ II (GD, GE3)	06/01→12/08
SHUTTLE (RA)	06/94→06/04

ISUZU

TROOPER	05/98→08/04
TROOPER (UB)	08/91→04/00

JAGUAR

XJ Coupe	09/73→03/96
XJSC Convertible	07/85→09/97

JEEP

WRANGLER III (JK)	04/07→

KIA

CLARUS Estate (GC)	05/98→
PRIDE (DA)	01/90→12/11
PRIDE Estate	08/98→05/01

LANCIA

THEMA SW (834_)	03/87→07/94

LAND ROVER

RANGE ROVER SPORT (LW_)	04/13→

LDV

PILOT Box	04/96→10/05
PILOT Bus	04/96→10/05

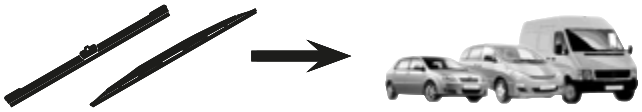

...A38

LDV
PILOT Platform/Chassis 04/96→10/05
SHERPA Bus (AS) 03/74→12/82

MASERATI
GHIBLI 01/67→12/73
GHIBLI Spider 01/67→12/73
INDY 01/67→12/75
MEXICO 09/64→12/75

MAZDA
121 I (DA) 03/87→11/90
929 II Estate (HV) 01/83→12/87
B-SERIE (UD) 01/81→08/85

MERCEDES-BENZ
G-CLASS (W463) 09/89→

MITSUBISHI
GALANT II Station Wagon (A16_V) 09/80→05/84
L 300 II Box (P0_V, P1_V, P_2V) 11/86→09/13
L 300 II Bus (P0_W, P1_W, P2_W) 11/86→12/13
PAJERO / SHOGUN (I) (L04_G, L14_G) 04/82→12/91
PAJERO / SHOGUN (II) (V3_W, V2_W, V4_W) 12/90→10/99
PAJERO / SHOGUN PININ (H6_W, H7_W) 03/99→06/07
SIGMA Station Wagon (F0_W) 06/92→10/96
SPACE WAGON (N9_W, N8_W) 10/98→12/04

NISSAN
LEAF (ZE0) 11/10→

OPEL
MONTEREY A (UBS_) 09/91→07/98
MONTEREY B 07/98→08/99

PORSCHE
911 (993) 10/93→09/97

RENAULT
12 10/69→12/84
12 Variable (117_) 08/70→12/83
KANGOO (KC0/1_) 08/97→
KANGOO Express (FC0/1_) 08/97→

ROVER
100 / METRO (XP) 11/89→12/98

SAAB
90 08/84→08/87
99 11/67→01/87
99 Combi Coupe 08/68→01/87

SEAT
FURA (025A) 01/82→12/86
RITMO (138) 07/78→09/83
RONDA (022A) 06/82→11/88

SUBARU
FORESTER (SF) 03/97→09/02
FORESTER (SG) 06/02→10/12
IMPREZA Estate (GF) 08/92→12/00
IMPREZA Estate (GG) 10/00→12/08
JUSTY II (JMA, MS) 10/95→11/03
LEGACY I Estate (BC, BJF) 01/89→08/94
LEGACY II (BD, BG) 03/94→10/99
LEGACY II Estate (BD, BG) 02/94→12/99
LEGACY III Estate (BE, BH) 10/98→08/03
LEGACY OUTBACK (BG) 01/96→12/99
LIBERO Box 01/84→07/94
LIBERO / SUMO Bus (E10, E12) 01/83→02/00
OUTBACK (BE, BH) 10/98→08/03
VIVIO 03/92→04/00

SUZUKI
BALENO Hatchback (EG) 03/95→05/02
CARRY Box (FD) 02/99→
CARRY Pickup (FD) 02/99→
GRAND VITARA I (FT) 03/98→08/06
SWIFT II Hatchback (EA, MA) 03/89→12/05
SWIFT II Saloon (AH, AJ) 03/89→05/01
VITARA (ET, TA) 07/88→08/99

TOFAS
DOGAN 01/76→12/02

...A38

TOFAS
KARTAL 10/85→12/02
SAHIN Saloon 01/80→12/03

TOYOTA
PICNIC (_XM10) 05/96→12/01

VOLVO
480 E 04/86→07/96

VW
BORA Estate (1J6) 05/99→05/05
FOX (5Z1, 5Z3) 10/03→
GOLF II (19E, 1G1) 08/83→12/92
GOLF II Van (19E, 1G1) 08/83→07/91
GOLF IV Variant (1J5) 05/99→06/06
KAEFER 12/47→08/03
PASSAT Variant (3B6) 10/00→08/05
PASSAT Variant (32B) 08/80→06/89

A38+AK1

JAGUAR
E-TYPE 04/61→04/75
E-TYPE 2+2 06/66→04/75
E-TYPE Convertible 04/61→04/75
XJ 07/68→02/93

MAZDA
323 I (FA) 01/77→11/82
323 I Station Wagon (FA) 05/78→05/86

MITSUBISHI
GALANT III (E1_A) 10/83→04/90

TOYOTA
LITEACE Bus (_R2_LG) 01/92→01/98

A41

ALFA ROMEO
147 (937_) 11/00→12/10
ALFASUD (901_) 06/72→06/85
ALFASUD Giardinetta (904_) 01/78→12/81
GT (937_) 11/03→09/10
GTV (116_) 01/78→02/87
SPIDER (105_) 03/66→12/77
SPIDER (115_) 01/71→12/93

AUDI
80 Avant (8C, B4) 09/91→01/96

CHEVROLET
AVEO Hatchback (T250, T255) 06/06→
AVEO Saloon (T200) 01/03→12/08
AVEO Saloon (T250, T255) 03/05→
BLAZER S10 ('82) 09/82→12/94
CAPTIVA (C100, C140) 06/06→
KALOS 03/05→
KALOS Saloon 03/05→
SPARK ('00) 09/00→12/04
TAHOE (B2W) 12/99→12/06
TRAILBLAZER (KC_) 09/01→12/09
TRANS SPORT 08/96→09/05

CHRYSLER
PT CRUISER (PT_) 06/00→12/10
VIPER 08/92→12/98
VIPER Convertible 10/91→12/98

CITROËN
AX (ZA-_) 07/86→12/98
BERLINGO (MF) 07/96→12/11
BERLINGO Box (M_) 07/96→12/11
CX I Break (MA) 09/75→08/85
CX II Break 07/85→12/92
DISPATCH (U6U) 06/94→12/06
DISPATCH Van/Box (BS_, BT_, BY_, BZ_) 06/94→10/06
GS 09/70→07/86
GS Break 07/71→07/86
LNA 11/76→10/86
SAXO (S0, S1) 02/96→04/04
SYNERGIE 03/94→07/02
XANTIA Break (X1) 06/95→01/98
XANTIA Break (X2) 01/98→04/03
XM Break (Y3) 05/89→07/94
XM Break (Y4) 05/94→10/00

...A41

DACIA
DOKKER 11/12→
DOKKER Express 12/12→
LODGY 03/12→

DAEWOO
KALOS (KLAS) 09/02→
KALOS Saloon (KLAS) 11/02→12/04
KORANDO (KJ) 01/99→
KORANDO Cabrio (KJ) 02/99→
MATIZ (KLYA) 09/98→
TICO (KLY3) 02/95→12/00

DAIHATSU
COPEN (L880_, L881_) 03/02→09/12
CUORE IV (L501) 08/94→12/99
CUORE V (L5) 11/96→10/98
EXTOL Box 07/00→
EXTOL Bus (S22_, S23_) 07/00→11/11
HIJET Box 06/86→10/90
HIJET Box (S85) 12/92→
HIJET Bus 06/86→06/90
HIJET Bus (S85) 06/93→
HIJET Pickup 04/98→
HIJET Pickup (_U60) 12/92→05/98
MIRA I 08/80→09/85
MIRA II 09/85→12/90
MIRA III 08/90→04/95
SIRION (M3_) 01/05→
TREVIS 06/06→

DODGE
VIPER Convertible ('02) 09/02→12/10
VIPER Convertible ('91) 10/91→09/02
VIPER Coupe ('91) 10/91→09/02

FIAT
IDEA (350_) 12/03→
PANDA (141_) 03/80→07/04
PANDA (169_) 09/03→
PANDA Van (141_) 01/86→02/04
PANDA Van (169_) 03/04→
PUNTO (176_) 09/93→09/99
PUNTO Convertible (176_) 04/94→06/00
PUNTO Van (176_) 04/96→02/00
REGATA (138_) 09/83→08/95
REGATA Weekend (138_) 06/83→08/95
RITMO Convertible (138_) 10/79→07/89
RITMO I (138_) 01/78→12/88
RITMO II (138_) 10/82→12/88
ULYSSE (220_) 06/94→08/02

FORD
CAPRI III (GECP) 01/78→04/87
ECOSPORT 09/11→
FIESTA Box (F3L, F5L) 07/91→02/96
FIESTA Box (FVD) 03/83→12/95
FIESTA Box (WFVT) 05/76→11/86
FIESTA II (FBD) 09/83→11/89
FIESTA V (JH_, JD_) 11/01→03/10
FIESTA V Van 10/03→12/10
FUSION (JU_) 08/02→12/12
GALAXY (WA6) 05/06→06/15
GALAXY (WGR) 03/95→05/06
KA (RB_) 09/96→11/08
RANGER (TKE) 04/11→
TRANSIT Box (FA_ _) 01/00→05/06
TRANSIT Bus ('06) 04/06→
TRANSIT Bus (FD_ _, FB_ _, FS_ _, FZ_ _, FC_ _) 01/00→05/06
TRANSIT TOURNEO ('06) 07/06→08/14
TRANSIT Van/Box ('06) 04/06→

HONDA
ACCORD VII (CL) 01/03→09/12
ACCORD VII (CM) 09/02→05/08
ACCORD VII Tourer (CM) 04/03→05/08
ACCORD IX Saloon (CR) 09/12→
CIVIC II Shuttle (EE) 01/88→02/95
CR-V IV (RE) 01/12→
INSIGHT (ZE) 04/00→12/06
JAZZ I (AA) 10/83→10/86
QUINTET (SU) 02/80→12/84

...A41

HONDA
S2000 (AP) 03/99→

HYUNDAI
ACCENT III (MC) 11/05→12/10
ACCENT III Saloon (MC) 11/05→11/10
ACCENT IV (RB) 11/10→
ACCENT IV Saloon (RB) 08/10→
AMICA 01/97→
H100 Bus (P) 07/93→10/04
HIGHWAY VAN 03/00→03/04
i10 (IA) 08/13→
i10 (PA) 10/07→02/16
i10 Saloon 12/13→
ix35 (LM, EL, ELH) 08/09→
MATRIX (FC) 06/01→08/10
PONY 06/74→12/85
PONY (X-1) 09/82→12/89
PONY (X-2) 10/89→01/95
PONY Wagon 02/78→06/86
PORTER Box 07/94→
PORTER Bus 07/94→04/04
SANTAMO 10/98→12/02
STELLAR (F31_, SF2_) 10/83→12/91
TERRACAN (HP) 06/01→03/08
TRAJET (FO) 03/00→07/08
TUCSON (JM) 08/04→

INFINITI
EX 09/07→
G Convertible 09/10→
G Coupe 09/07→
G Saloon ('07) 01/07→
Q50 04/13→
Q60 Convertible 10/13→
Q60 Coupe 10/13→

ISUZU
ASCENDER 09/02→
CAMPO (KB) 04/77→12/91
GEMINI 01/90→12/93
GEMINI (JT) 10/84→12/90
GEMINI Saloon 01/90→12/93
GEMINI Saloon (JT) 09/84→06/90
TROOPER (UBS) 01/83→12/91
TROOPER Open Off-Road Vehicle (UBS) 01/83→12/91

IVECO
MASSIF Pickup 10/08→02/11
MASSIF Single Cab 10/08→02/11
MASSIF Station Wagon 10/08→02/11

JEEP
CHEROKEE 09/73→09/86

KIA
AVELLA 11/95→12/01
AVELLA Hatchback 11/95→12/01
CARENS III (UN) 09/06→
CERATO (LD) 03/04→
CERATO Saloon (LD) 04/04→12/09
JOICE 02/00→
NIRO 09/16→
PICANTO (BA) 04/04→
PICANTO (TA) 05/11→
RIO II (JB) 03/05→
RIO II Saloon (JB) 03/05→
RIO IV (YB, SC) 01/17→
RIO IV Saloon (SC, FB) 07/17→
SEDONA III 09/05→
SPORTAGE (JE_, KM_) 09/04→
SPORTAGE (K00) 04/94→08/04
STONIC (YB) 07/17→

LADA
GRANTA (2190) 10/11→
GRANTA (2349) 10/11→
GRANTA Hatchback (2191) 08/14→
KALINA Estate (1117) 10/04→
KALINA Estate (2194) 11/13→
KALINA Hatchback (1119) 10/04→12/13
KALINA Hatchback (2192) 06/13→

...A41

LADA
KALINA Saloon (1118) 10/04→

LANCIA
MUSA (350_) 10/04→09/12
Y (840_) 11/95→09/03
YPSILON (843_) 10/03→12/11
ZETA (22_) 05/95→09/02

LAND ROVER
DISCOVERY III (LA_) 07/04→09/09
DISCOVERY IV (LA_) 09/09→
RANGE ROVER SPORT (LS_) 02/05→03/13

LEXUS
LS (UCF20) 10/94→12/00
LS (UCF30) 10/00→08/06
RX (MCU15) 07/00→05/03

LOTUS
EUROPA ('70) 05/70→04/76

MAZDA
2 (DL, DJ) 11/14→
2 (DY) 02/03→06/07
2 Saloon (DL) 01/15→
5 (CR19) 02/05→12/10
5 (CW) 09/10→
121 II (DB) 11/90→05/97
626 III Station Wagon (GV) 09/87→10/98
DEMIO (DW) 01/96→07/03
E-SERIE Box (SG) 01/99→12/06
E-SERIE Box (SR2) 10/83→07/04
E-SERIE Bus 03/91→07/04
E-SERIE Bus (SR1) 01/84→05/94
E-SERIE MPV (SG) 06/95→10/01
E-SERIE Platform/Chassis (SD1) 01/83→07/99
E-SERIE Platform/Chassis (SD1, SL) 08/99→09/04
MPV II (LW) 08/99→02/06
PREMACY (CP) 07/99→03/05

MERCEDES-BENZ
C-CLASS Estate (S202) 06/96→03/01
C-CLASS T-Model (S203) 03/01→08/07
E-CLASS Estate (S124) 06/93→06/96
E-CLASS Estate (S210) 06/96→03/03
E-CLASS T-Model (S211) 03/03→07/09
G-CLASS (W460) 03/79→08/93
G-CLASS (W461) 09/89→
G-CLASS (W463) 09/89→
G-CLASS Cabrio (W463) 09/89→
KOMBI Estate (S123) 09/77→12/86
KOMBI Estate (S124) 09/85→07/93
M-CLASS (W163) 02/98→06/05
VANEO (414) 02/02→07/05
VIANO (W639) 09/03→
VITO Bus (W639) 09/03→
VITO / MIXTO Box (W639) 09/03→

MG
METRO 05/82→09/90

MITSUBISHI
GALANT VI Estate (EA_) 09/96→10/03
L 300 I Box (L03_P) 02/80→02/87
L 300 I Bus (L03_P/G, L0_2P) 05/80→02/87
L 300 I Platform/Chassis (L03_P) 05/80→
LANCER V Station Wagon (CB_W, CD_W) 09/92→10/03
PAJERO / SHOGUN (I) (L04_G, L14_G) 04/82→12/91
PAJERO / SHOGUN (III) (V7_W, V6_W) 01/99→01/07
PAJERO / SHOGUN CLASSIC (V2_W) 07/01→
PAJERO / SHOGUN Soft Top (II) (L04_G) 12/82→11/90
SANTAMO 03/99→12/04
SPACE RUNNER (N1_W, N2_W) 10/91→08/99
SPACE RUNNER (N6_W) 08/99→01/03
SPACE WAGON (N3_W, N4_W) 05/91→11/98
SPACE WAGON (N9_W, N8_W) 10/98→12/04

NISSAN
ALMERA II (N16) 06/00→

...A41

NISSAN
ALMERA II Hatchback (N16) 01/00→
ALTIMA III 10/06→07/13
CHERRY II Hatchback (N10) 08/78→06/83
MURANO II (Z51) 10/07→09/14
NV200 Box 02/10→
NV200 / EVALIA Bus 07/10→
PATROL III/1 Hardtop (K160) 11/79→02/89
PATROL III/1 Station Wagon (W160) 11/79→02/89
PICK UP I (720) 01/80→03/86
PRAIRIE (M10, NM10) 12/82→10/88
PRIMERA Traveller (W10) 07/90→03/98
PRIMERA Traveller (WP11) 06/96→01/02
SERENA (C23M) 06/91→09/01
VANETTE Bus (KC120) 06/81→12/87
VANETTE CARGO Box (HC 23) 09/94→05/02
VANETTE CARGO Bus (HC 23) 09/94→05/01
X-TRAIL (T30) 06/01→01/13
X-TRAIL (T31) 03/07→07/14

OPEL
AGILA (B) (H08) 04/08→
ANTARA 05/06→
ASCONA A (81_, 86_, 87_, 88_) 10/70→08/75
ASCONA A Voyage (84_, 89_) 10/70→08/75
ASTRA F CLASSIC Estate 01/98→01/05
ASTRA F Estate (51_, 52_) 09/91→01/98
ASTRA F Van (55_) 10/91→01/99
CORSA A Box 02/86→09/94
CORSA A Hatchback (93_, 94_, 98_, 99_) 09/82→03/93
CORSA A TR (91_, 92_, 96_, 97_) 09/82→03/93
CORSA B (73_, 78_, 79_) 03/93→12/02
CORSA B Estate (F35) 01/99→12/02
GT Convertible 06/07→12/11
KADETT D (31_-34_, 41_-44_) 08/79→08/84
KADETT D (32_,37_,39, _42) 08/79→08/84
KADETT D Estate (35_, 36_, 45_, 46_) 08/79→08/84
REKORD E Estate (61_, 66_, 67_) 08/77→08/86

PEUGEOT
104 10/72→06/88
104 Coupe 09/73→06/88
106 I (1A, 1C) 08/91→04/96
106 II (1) 04/96→05/05
106 Van (1_) 08/91→03/01
206+ (T3E) 01/09→
206 CC (2D) 09/00→
206 Hatchback (2A/C) 08/98→
206 Saloon 03/07→
206 SW (2E/K) 07/02→
206 Van 04/99→03/09
305 I (581A) 11/77→09/82
305 I Break (581D) 08/80→09/82
305 II (581M) 10/82→07/90
305 II Break (581E) 10/82→07/90
306 Break (7E, N3, N5) 06/94→04/02
504 (A_, M_) 07/68→07/86
504 Break (D_, F_) 04/71→07/86
504 Pickup (E_) 01/80→12/89
806 (221) 06/94→08/02
EXPERT (224) 10/95→12/06
J7 Box 08/68→03/80
J7 Bus 08/68→03/80
J7 Platform/Chassis 08/68→03/80
J9 Box 03/80→06/87
J9 Bus 03/80→06/87
J9 Platform/Chassis 03/80→06/87
PARTNER Box (5) 04/96→12/15
PARTNER Combispace (5F) 05/96→12/15

PORSCHE
911 01/63→11/90
911 (964) 12/88→09/93
911 (993) 10/93→09/97
911 Convertible (993) 07/94→09/97

...A41

PORSCHE
911 Targa 11/64→11/90
911 Targa (964) 12/88→09/93
911 Targa (993) 01/94→09/97

PROTON
SAGA Hatchback 10/88→06/96
SAGA Saloon 07/85→06/96

RENAULT
9 (L42_) 09/81→02/97
11 (B/C37_) 03/83→09/95
11 Box (S37_) 03/83→07/89
12 10/69→12/84
12 Box 07/75→02/83
12 Variable (117_) 08/70→12/83
14 (121_) 05/76→12/83
15 (130_) 09/71→10/80
17 03/72→10/80
18 (134_) 04/78→11/94
18 Box 05/79→07/86
18 Variable (135_) 02/79→11/94
20 (127_) 10/75→12/83
30 (127_) 02/75→03/86
CLIO I (B/C57_, 5/357_) 05/90→09/98
CLIO I Box (S57_) 01/91→09/98
ESPACE I (J11_) 07/84→12/92
ESPACE II (J/S63_) 01/91→10/97
LATITUDE (L70_) 07/10→
MEGANE Scenic (JA0/1_) 10/96→12/01
RAPID / EXTRA Box (F40_, G40_) 07/85→11/01
SCÉNIC I (JA0/1_) 09/99→10/03
SUPER 5 (B/C40_) 10/84→12/96
SUPER 5 Box (S40_) 10/84→12/96

ROVER
100 Convertible (XP) 04/94→12/98
100 / METRO (XP) 11/89→12/98
2000-3500 (P6) 09/63→05/76

SAAB
900 I (AC4, AM4) 01/79→12/93
900 I Combi Coupe 06/78→06/94
900 I Convertible 10/85→12/94

SEAT
ALHAMBRA (7V8, 7V9) 04/96→03/10
MALAGA (023A) 11/84→12/93
MARBELLA (28) 08/86→10/98
MARBELLA Box (028A) 11/86→12/93
PANDA (141A) 10/80→12/86
RONDA (022A) 06/82→11/88
TERRA (24) 01/87→12/96
TERRA Box (024A) 01/87→02/96

SKODA
105,120 (742) 08/76→12/90
105,120 (744) 02/83→12/90
130 02/85→10/91
FAVORIT (781) 05/89→09/94
FAVORIT Forman (785) 06/88→06/95
FELICIA I (6U1) 10/94→03/98
FELICIA I Estate (6U5) 07/95→03/98
FELICIA II (6U1) 01/98→06/01
FELICIA II Estate (6U5) 01/98→06/01
RAPID (120G, 130G, 135G) 02/83→10/91

SSANGYONG
KORANDO 07/10→
RODIUS II 07/13→

SUBARU
IMPREZA Estate 07/07→12/12
IMPREZA Hatchback 10/00→12/07
IMPREZA Hatchback (GP) 10/11→
JUSTY I (KAD) 11/84→08/96
JUSTY IV 01/07→
LIBERO / SUMO Bus (E10, E12) 01/83→02/00
REX II 08/81→06/89
REX III 06/89→03/92

SUZUKI
ALTO 09/84→12/88
ALTO (HA24) 09/04→12/09

...A41

SUZUKI
CAPPUCINO (EA) 02/92→08/98
JIMNY (FJ) 07/98→
JIMNY Open Off-Road Vehicle (SN) 01/98→
SPLASH 01/08→

TOYOTA
AURIS (NRE15_, ZZE15_, ADE15_, ZRE15_, NDE15_) 10/06→09/12
AVENSIS (T25_) 04/03→11/08
AVENSIS Estate (T25, CDT25_, ZZT25_) 04/03→11/08
AVENSIS Saloon (T25) 04/03→11/08
AVENSIS VERSO (_CLM2_, _ACM2_) 08/01→11/09
CARINA E Sportswagon (_T19_) 02/92→09/97
CELICA (ZZT23_) 08/99→03/06
COROLLA Compact (_E11_) 04/97→01/02
COROLLA Estate (_E12J_, _E12T_) 03/01→12/08
COROLLA Liftback (_E8_) 05/82→05/89
COROLLA Liftback (_E11_) 04/97→01/02
COROLLA Verso (ZDE12_, CDE12_) 07/01→07/04
COROLLA Verso (ZER_, ZZE12_, R1_) 03/04→04/09
COROLLA Wagon (_E10_) 05/92→04/97
FJ CRUISER (GSJ1_) 01/06→
HIACE II Box (LH5_, YH7_, LH7_, LH6_, YH6_, YH5_) 12/82→11/89
HIACE II Wagon (LH7_, LH5_, LH6_, YH7_, YH6_, YH5_) 11/82→11/89
HILUX VIII Platform/Chassis (_N1_) 05/15→
LAND CRUISER 80 (_J8_) 01/90→02/98
LITEACE Box (CM3_V, KM3_V) 01/83→03/98
LITEACE Bus (CM30_G, KM30_G) 10/85→01/92
PICNIC (_XM10) 05/96→12/01
PREVIA (TCR2_, TCR1_)
PRIUS (ZVW3_) 04/09→
PRIUS Hatchback (NHW20_) 08/03→03/09
STARLET (_P7_) 10/84→12/89
STARLET (_P8_) 12/89→03/96
STARLET (EP91) 01/96→10/99
TERCEL (AL2_) 09/82→01/88
YARIS VERSO (_NLP2_, _NCP2_) 08/99→09/05

VOLVO
240 (P242, P244) 08/74→12/93
240 Kombi (P245) 08/74→12/93
260 (P262, P264) 08/74→07/82
260 Estate (P265) 07/75→07/82
V40 Estate (VW) 07/95→06/04
V70 II (SW) 11/99→12/08
XC70 CROSS COUNTRY 10/97→10/07
XC90 I 06/02→12/14

VW
CADDY I (14) 09/79→07/92
GOLF I (17) 04/74→12/85
GOLF I Cabriolet (155) 01/79→08/93
JETTA I (16) 08/78→12/87
PASSAT Estate (3B5) 05/97→12/01
PASSAT Variant (3A5, 35I) 02/88→06/97
POLO (86C, 80) 10/81→09/94
POLO Box (86CF) 08/92→07/94
POLO CLASSIC (86C, 80) 01/85→09/94
POLO Coupe (86C, 80) 10/81→09/94
POLO Saloon (602, 604, 612, 614) 05/09→
SCIROCCO (53) 02/74→07/80
SCIROCCO (53B) 08/80→07/92
SHARAN (7M8, 7M9, 7M6) 05/95→03/10
TRANSPORTER IV Box (70XA) 07/90→04/03
TRANSPORTER IV Bus (70XB, 70XC, 7DB, 7DW, 7DK) 09/90→06/03

A41+AK1

BMW
3 (E21) 06/75→03/84

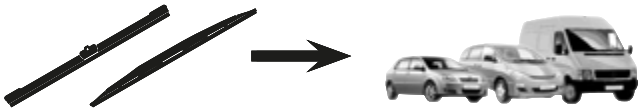

...A41+AK1

DAIHATSU
FOURTRAK Hard Top (F7, F8)	06/84→12/98
FOURTRAK Soft Top (F7, F8)	02/85→12/98
SPORTRAK Hard Top (F300)	10/88→12/99
SPORTRAK Soft Top (F300)	10/88→12/99

HYUNDAI
PONY (X-1)	09/82→12/89
PONY Saloon (X-1)	10/85→09/89

JAGUAR
XJ	07/68→02/93

MG
METRO	05/82→09/90

MITSUBISHI
COLT I (A15_A)	12/78→03/84
GALANT I (A12_)	01/77→08/80
GALANT I Station Wagon (A12_V)	01/79→08/80
L 200 (K3_T, K2_T, K1_T, K0_T)	01/86→10/96
LANCER F II (A17_)	03/83→09/86
SAPPORO I (A12_)	04/78→07/80

TOYOTA
DYNA Platform/Chassis	08/77→04/95
HILUX II Pickup (LN8_, RN5_, LN6_, YN6_, YN5_, LN5_, RN6_)	08/83→02/06
HILUX II Platform/Chassis (LN6_, LN5_, YN6_, YN5_, VZN1_, RZ	08/83→08/05
LITEACE Wagon (YM2_, CM2_, KM2_)	10/79→09/85
MODELL F Bus (_R2_, 31)	11/82→10/90
STARLET (_P7_)	10/84→12/89

A43

ALFA ROMEO
75 (162B_)	05/85→12/92
ALFASUD Sprint (902_)	09/76→12/89
GIULIETTA (116_)	10/77→12/85
MONTREAL (105_)	12/72→03/79

CHEVROLET
ALERO	03/99→09/04

DAEWOO
LACETTI Hatchback (KLAN)	02/02→

DAIHATSU
MOVE (L6_, L9_)	09/98→09/02

DODGE
CALIBER	06/06→
JOURNEY	06/08→

FORD
KA (RB_)	09/96→11/08
KA Van (RB)	05/02→05/05
STREET KA (RL2)	03/03→07/05

HONDA
ACCORD VI Coupe (CG)	12/97→06/03
CR-V III (RE)	06/06→
HR-V (GH)	03/99→
INTEGRA Coupe (DC2, DC4)	07/93→11/01
LOGO (GA3)	03/99→03/02
ODYSSEY (RA_)	10/95→10/00
ODYSSEY (RB_)	09/98→

HYUNDAI
GALLOPER I	08/91→07/98
GALLOPER II (JK-01)	02/97→12/03
H-1 Box	10/97→04/08
H-1 / STAREX	06/97→

INFINITI
G Saloon ('02)	10/02→

MASERATI
GRANCABRIO	03/10→
GRAN TURISMO	09/07→

MAZDA
323 C V (BA)	08/94→01/01
MPV I (LV)	09/88→09/99

MG
MG 3	04/11→

...A43

MITSUBISHI
COLT IV (CA_A)	03/92→04/96
GALLOPER (JK-01)	09/98→12/03
L 400 Box (PD_W, PC_W, PB_V, PA_W, PA_V)	12/94→04/07
L 400 / SPACE GEAR Bus (PD_W, PC_W, PA_V, PB_V, PA_W)	06/94→04/07
LANCER V (CB/D_A)	09/91→12/96
LANCER V Station Wagon (CB_W, CD_W)	09/92→10/03

NISSAN
ALTIMA II	08/01→04/07
CHERRY II Hatchback (N10)	08/78→06/83
CHERRY II Traveller (VN10)	08/78→12/83
MAXIMA / MAXIMA QX V (A33)	04/99→11/03
X-TRAIL (T30)	06/01→01/13

OPEL
COMBO Box Body / Estate	10/01→
COMBO Tour	10/01→
SINTRA	11/96→04/99

PROTON
GEN 2 (CM_)	06/04→
IMPIAN	09/01→
JUMBUCK Pickup	02/02→
PERSONA 300 / SATRIA (C9_M)	03/96→07/04
PERSONA 400 / WIRA (C9_S)	01/94→02/08
PERSONA 400 / WIRA Hatchback (C9_C, C9_S)	01/94→02/08
SATRIA / COMPACT (C9_M)	04/96→05/06
SAVVY	10/05→
WIRA	05/95→
WIRA Hatchback	01/00→

SUBARU
IMPREZA Estate (GG)	10/00→12/08
IMPREZA Saloon (GD)	09/99→06/09

SUZUKI
ALTO (HA11)	10/93→09/98
ALTO (HA12, HA23)	10/97→09/04
CARRY Pickup	07/85→12/90
SWIFT I (AA)	10/83→12/89
SWIFT IV (FZ, NZ)	10/10→
X-90 (EL)	09/95→12/97

TOYOTA
4 RUNNER (KZN18_, VZN18_, RZN18_)	11/95→11/02
4 RUNNER (RN5_, LN5_, VZN6_, RN7_, RN6_)	07/84→10/89
4 RUNNER (RN10_, VZN13_, VZN10_, RN13_)	08/87→03/96
COROLLA Liftback (_E9_)	07/87→10/95
DYNA 150 Platform/Chassis ('00)	01/00→11/08
DYNA 150 Platform/Chassis ('85)	08/85→08/88
DYNA 150 Platform/Chassis ('88)	08/88→06/95
DYNA 150 Platform/Chassis ('95) (LY_)	05/95→07/01
DYNA 200 Platform/Chassis ('88)	01/85→05/95
DYNA 200 Platform/Chassis ('95)	06/95→07/01
DYNA Bus (LY1_, _H8_)	08/87→07/01
PRIUS Saloon (NHW11_)	05/00→01/04
STARLET (EP91)	01/96→10/99

VOLVO
850 Estate (LW)	04/92→10/97
V70 I (LV)	12/95→12/00

A43+AK1

ALFA ROMEO
ALFETTA (116_)	07/74→12/84
ALFETTA GT (116_)	01/74→01/86

MITSUBISHI
CELESTE (A7_)	10/75→06/81
COLT III (C5_A)	10/86→05/92
LANCER III Station Wagon (C1_V, C3_V)	09/85→08/92

...A43+AK1

MITSUBISHI
LANCER IV (C6_A, C7_A)	04/88→05/94
LANCER IV Saloon (C6_A)	04/88→09/92

SUBARU
JUSTY I (KAD)	11/84→08/96

SUZUKI
ALTO	09/84→12/88

TOYOTA
DYNA Bus (_U3_, _U2_)	08/77→08/87

A45

ALFA ROMEO
6 (119_)	04/79→12/86
33 (905_)	05/83→12/93
33 (907A_)	01/90→09/94
33 Sportwagon (905A_)	01/84→12/89
33 Sportwagon (907B_)	01/90→09/94
90 (162_)	10/84→07/87
ARNA (920_)	03/83→12/86

ALPINA
B3 Estate (E30)	09/87→06/92

AUDI
100 Avant (4A, C4)	12/90→07/94
A6 Avant (4A, C4)	06/94→12/97
COUPE (81, 85)	07/80→10/88
QUATTRO (85)	07/80→07/91

BMW
3 Compact (E36)	03/94→08/00
3 Compact (E46)	03/01→02/05
3 Touring (E30)	07/87→10/94
5 (E28)	06/80→12/87
5 Touring (E39)	09/96→05/04
7 (E23)	05/77→04/88
X5 (E53)	05/00→02/07

CHEVROLET
CRUZE (J300)	05/09→
CRUZE Hatchback (J305)	12/10→
HHR	09/05→12/11
LACETTI (J200)	03/03→

CHRYSLER
DAYTONA Coupe	10/84→10/92
NEON (PL)	05/94→09/00
VOYAGER I (AS)	08/84→09/90
VOYAGER II (ES)	08/90→09/95
VOYAGER III (GS)	01/95→03/01
VOYAGER IV (RG, RS)	09/99→12/08

CITROËN
AXEL	10/81→03/91
C2 (JM_)	09/03→
C2 ENTERPRISE	04/09→
C3 I (FC_)	02/02→
C3 Pluriel (HB_)	05/03→
C5 I (DC_)	03/01→03/05
C5 I Break (DE_)	06/01→08/04
GS	09/70→07/86
RELAY Bus (230P)	02/94→04/02
RELAY Bus (244, Z_)	04/02→
RELAY Van/Box (230L)	02/94→04/02
RELAY Van/Box (244)	04/02→
SAXO (S0, S1)	02/96→04/04
XM (Y3)	05/89→10/94
XM (Y4)	05/94→10/00
XSARA (N1)	04/97→12/05
XSARA Coupe (N0)	01/98→04/05
ZX (N2)	03/91→07/99

DACIA
DUSTER	04/10→
DUSTER Box	04/11→

DAEWOO
ARANOS	01/95→11/97
CIELO	06/94→12/07
KORANDO (KJ)	01/99→
KORANDO Cabrio (KJ)	02/99→
LACETTI Hatchback (KLAN)	02/02→
MUSSO (FJ)	07/98→
NEXIA (KLETN)	02/95→08/97

...A45

DAEWOO
NEXIA Saloon	07/08→
NEXIA Saloon (KLETN)	02/95→06/08
NUBIRA (KLAJ)	04/97→
TICO (KLY3)	02/95→12/00

DAIHATSU
APPLAUSE I (A101, A111)	06/89→07/97
APPLAUSE II (A101)	07/97→05/00
CHARADE IV (G200, G202)	01/93→09/00
CHARADE IV Saloon (G203)	03/93→01/01
COPEN (L880_, L881_)	03/02→09/12
CUORE IV (L501)	08/94→12/99
CUORE V (L5)	11/96→10/98
CUORE V (L7_)	10/98→05/03
GRAN MOVE (G3)	10/96→
MIRA III	08/90→04/95
SIRION (M1)	04/98→04/05
TERIOS (J2_)	11/05→

DODGE
CARAVAN ('00) (RG_)	02/00→12/07
CARAVAN ('95)	01/95→03/01
NEON	05/94→08/99

FIAT
DOBLO Cargo (223_)	11/00→
DOBLO MPV (119_, 223_)	03/01→
DUNA (146_)	01/87→12/91
DUNA Saloon	07/91→07/96
DUNA Weekend (146_)	01/87→10/01
FIORINO Box (146_)	01/88→
FIORINO Pick up (146_)	01/88→05/01
FULLBACK Pickup (KT_)	01/16→
PALIO (178BX)	04/96→
PALIO Weekend (178_)	04/96→
PUNTO (188_)	09/99→07/12
PUNTO Van (188_)	02/00→10/09
SIENA (172_)	08/06→
SIENA (178_)	04/96→10/13
STRADA Pickup (178_)	02/98→
STRADA Pickup (278_)	01/09→
UNO (146_)	01/83→06/06
UNO (146_)	08/00→12/13
UNO Box (146_)	02/88→07/96

FORD
CAPRI III (GECP)	01/78→04/87
CORTINA ('80)	07/79→07/82
CORTINA ('80) Estate	07/79→07/82
ESCORT '81 Express (AVA)	01/81→02/86
ESCORT '86 Express (AVF)	02/86→07/90
ESCORT III (GAA)	09/80→07/86
ESCORT III Convertible (ALD)	09/83→12/85
ESCORT III Estate (AWA)	09/80→12/85
ESCORT IV (GAF, AWF, ABFT)	03/83→10/90
ESCORT IV Convertible (ALF)	01/86→07/90
ESCORT IV Estate (AWF, AVF)	10/85→10/90
ORION I (AFD)	07/83→03/86
ORION II (AFF)	12/85→07/90
P 100 I	04/82→09/87
RANGER (ER, EQ)	04/97→06/06
RANGER (ET)	01/05→07/12
TRANSIT Box (FA_ _)	01/00→05/06
TRANSIT Bus ('06)	04/06→
TRANSIT Bus (FD_ _, FB_ _, FS_ _, FZ_ _, FC_ _)	01/00→05/06
TRANSIT TOURNEO ('06)	07/06→08/14
TRANSIT Van/Box ('06)	04/06→

HONDA
ACCORD III (CA)	11/85→12/89
ACCORD III Aerodeck (CA)	11/85→12/89
CIVIC II Shuttle (EE)	01/88→02/95
CIVIC III Hatchback (AL, AJ, AG, AH)	10/83→10/87
CIVIC III Saloon (AM, AK, AU)	10/83→10/87
CIVIC IV Hatchback (EC, ED, EE)	09/87→10/93
CIVIC IV Saloon (ED)	09/87→10/93
CIVIC V Coupe (EJ)	08/93→03/96
CIVIC V Hatchback (EG)	10/91→11/95
CIVIC V Saloon (EG, EH)	10/91→12/95

...A45

HONDA

CIVIC VI Aerodeck (MB, MC)		04/98→02/01
CIVIC VI Coupe (EJ, EM1)		03/96→12/00
CIVIC VI Fastback (MA, MB)		09/94→02/01
CIVIC VI Hatchback (EJ, EK)		10/95→02/01
CIVIC VI Saloon (EJ, EK)		06/95→03/01
CIVIC IX (FK)		02/12→
CIVIC IX Saloon (FB, FG)		09/11→
CIVIC IX Tourer (FK)		01/14→
CIVIC X Hatchback (FC_, FK)		09/16→
CIVIC X Saloon (FC_)		09/15→
CONCERTO (HW, MA)		08/89→10/96
CONCERTO Saloon (HWW)		08/89→05/95
CRX III (EH, EG)		03/92→12/98
HR-V (RU)		11/14→
INSIGHT (ZE)		04/00→12/06
INTEGRA (DA)		10/85→08/93
INTEGRA (DC5)		08/01→
LEGEND I (HS, KA)		01/86→03/91
LEGEND I Coupe (KA3)		10/87→03/91
PRELUDE III (BA)		04/86→11/96
PRELUDE V (BB)		10/96→04/01
QUINTET (SU)		02/80→12/84

HYUNDAI

ACCENT I (X-3)		05/94→01/00
ACCENT II (LC)		09/99→12/06
ACCENT II Saloon (LC)		09/99→12/06
ACCENT Saloon (X-3)		05/94→01/00
COUPE (GK)		01/01→11/09
COUPE (RD)		06/96→04/02
ELANTRA (XD)		03/00→08/06
ELANTRA Saloon (HD)		11/05→12/11
ELANTRA Saloon (XD)		03/00→09/06
H100 Box		07/93→12/04
H100 Bus (P)		07/93→10/04
H100 Platform/Chassis		01/04→
H100 Platform/Chassis		07/93→08/98
H100 Platform/Chassis		01/04→
H100 Platform/Chassis		07/93→08/98
i30 (FD)		10/07→11/11
i30 CW (FD)		10/07→06/12
IONIQ		03/16→
LANTRA II (J-2)		06/95→12/00
LANTRA II Wagon (J-2)		06/95→10/00
PONY (X-2)		10/89→01/95
PONY / EXCEL Saloon (X-2)		09/89→01/95
PORTER Box		07/94→
PORTER Bus		07/94→04/04
PORTER Pickup		07/94→12/04
PORTER Platform/Chassis		05/04→
SANTA FÉ II (CM)		10/05→12/12
SANTAMO		10/98→12/02
S COUPE (SLC)		02/90→05/96
SONATA II (Y-2)		09/88→12/93
TIBURON Coupe		01/01→12/08

INFINITI

Q45 I		01/89→12/96
QX50		08/13→

ISUZU

CAMPO (KB)		04/77→12/91
MIDI Box (98000N)		06/88→07/96
MIDI Bus (94000, 98000)		06/88→07/96
MIDI Van (94000, 98000)		06/88→07/96
PIAZZA (JR_)		06/81→12/90
PICKUP		10/87→08/96
RODEO Closed Off-Road Vehicle		09/97→08/04
RODEO Pickup		08/06→04/07

IVECO

MASSIF Pickup		10/08→02/11
MASSIF Single Cab		10/08→02/11
MASSIF Station Wagon		10/08→02/11

JEEP

COMMANDER (XK)		09/05→12/10
WRANGLER II (TJ)		08/96→12/08

KIA

BESTA Box		01/93→12/03

...A45

KIA

CEE'D Hatchback (ED)		12/06→12/12
CEE'D SW (ED)		09/07→12/12
JOICE		02/00→
K2700		01/04→
K2700 (SD)		10/99→
MAGENTIS (MG)		10/05→
MENTOR		01/95→10/97
OPIRUS (GH)		09/03→
OPTIMA I		01/10→
OPTIMA II		09/15→
OPTIMA Sportswagon (JF)		09/16→
PREGIO Box (TB)		10/97→
PREGIO Bus		08/95→09/04
PRIDE (DA)		01/90→12/11
PRIDE Estate		08/98→05/01
PRO CEE'D (ED)		02/08→02/13
RIO Estate (DC)		07/00→02/05
RIO Saloon (DC_)		07/00→02/05
SEDONA I		06/98→10/01
SEDONA II		01/99→09/07
SHUMA (FB)		09/96→12/01
SHUMA II (FB)		05/01→08/04
SORENTO I (JC)		08/02→
SPORTAGE (SL)		09/09→
STINGER (CK)		06/17→

LADA

VESTA		11/15→

LANCIA

DELTA I (831_)		09/79→01/94
PRISMA (831_)		01/83→02/92
TREVI (828_)		05/80→01/87
Y10 (156_)		03/85→12/95

LAND ROVER

DISCOVERY I (LJ_)		06/89→10/98
RANGE ROVER I (AE, AN, HAA, HAB, HAM, HBM, RE, RN)		10/69→04/96
RANGE ROVER III (LM_)		03/02→12/12
RANGE ROVER IV (LG_)		08/12→

LEXUS

LS (UCF10)		09/89→12/95

MASERATI

BORA		01/71→12/83
INDY		01/67→12/75
KHAMSIN		01/72→12/82
MERAK		05/75→12/83
QUATTROPORTE V		03/04→

MAZDA

6 (GG)		06/02→12/08
6 Hatchback (GG)		08/02→12/08
6 Station Wagon (GY)		08/02→12/07
121 I (DA)		03/87→11/90
323 C IV (BG)		06/89→09/00
323 C V (BA)		08/94→01/01
323 F IV (BG)		04/87→10/94
323 F V (BA)		07/94→09/98
323 III (BF)		08/85→11/91
323 III Hatchback (BF)		08/85→08/93
323 III Station Wagon (BW)		01/86→10/98
323 P V (BA)		10/96→09/98
323 S IV (BG)		06/89→05/95
323 S V (BA)		09/92→12/03
B-SERIE (UF)		01/85→12/99
B-SERIE (UN)		11/98→11/06
B-SERIE Platform/Chassis (UF)		05/85→10/01
B-SERIE Platform/Chassis (UN)		02/99→11/06
BT-50 Pickup (B22, B32, UP, UR)		11/11→
BT-50 Pickup (CD, UN)		08/06→12/15
BT-50 Platform/Chassis (CD, UN)		08/06→
FESTIVA		04/89→12/00
MX-3 (EC)		07/91→09/98
MX-5 I (NA)		09/89→04/98
MX-5 II (NB)		01/98→10/05
MX-5 III (NC)		03/05→12/14
RX 8 (SE17)		10/03→06/12

MERCEDES-BENZ

S-CLASS (W116)		08/72→07/80

...A45

MERCEDES-BENZ

SL (R107)		05/71→12/89
SL Coupe (C107)		01/72→08/85
V-CLASS (638/2)		02/96→07/03
VITO Box (638)		03/97→07/03
VITO Bus (638)		02/96→07/03

MG

EXPRESS Box		03/03→05/05
MG ZR		06/01→04/05
MG ZS		07/01→04/05
MG ZS Hatchback		07/01→10/05

MINI

MINI (F55)		09/13→
MINI (F56)		04/13→
MINI (R50, R53)		06/01→09/06
MINI (R56)		11/05→11/13
MINI CLUBMAN (R55)		10/06→06/14
MINI Convertible (F57)		11/14→
MINI Convertible (R52)		07/04→11/07
MINI Convertible (R57)		10/07→06/15

MITSUBISHI

CANTER Platform/Chassis (FB4_, FE4_)		09/92→09/96
COLT II (C1_A)		10/82→04/88
CORDIA (A21_A, AB)		10/82→07/89
ECLIPSE I (D2_A)		12/89→12/95
GALANT IV (E3_A)		11/88→12/92
GALANT IV Saloon (E3_A)		11/87→03/93
GALANT VI (EA_)		09/96→10/04
GALANT VI Estate (EA_)		09/96→10/03
GALANT Saloon (DJ_, ED_, EF_)		10/03→
L 200 (KB_T, KA_T)		01/04→12/15
L 200 / TRITON (KJ_, KK_, KL_)		11/14→
L 300 II Box (P0_V, P1_V, P_2V)		11/86→09/13
L 300 II Bus (P0_W, P1_W, P2_W)		11/86→12/13
L 300 II Platform/Chassis (P1_T)		04/94→04/00
LANCER Estate (CS_W)		09/03→12/08
LANCER IV (C6_A, C7_A)		04/88→05/94
LANCER Saloon (CS_A, CT0)		03/00→12/13
LANCER Saloon (CY/Z_A)		03/07→
LANCER SPORTBACK (CX_A)		10/07→
OUTLANDER I (CU_W)		03/01→12/06
PAJERO / SHOGUN PININ (H6_W, H7_W)		03/99→06/07
SANTAMO		03/99→12/04
SPACE RUNNER (N1_W, N2_W)		10/91→08/99
SPACE RUNNER (N6_W)		08/99→01/03
SPACE STAR MPV (DG_A)		06/98→12/04
SPACE WAGON (N3_W, N4_W)		05/91→11/98
STARION (A18_A)		05/82→06/90

NISSAN

200 SX (S14)		10/93→12/99
280 ZX,ZXT (HGS130)		07/78→05/84
350 Z Coupe (Z33)		09/02→11/09
350 Z Roadster (Z33)		10/03→12/09
ALMERA TINO (V10)		12/98→02/06
BLUEBIRD (B610)		08/71→01/80
BLUEBIRD Traveller (W910)		01/80→06/86
CABSTAR Platform/Chassis (F23, H41, H42)		07/92→09/11
CHERRY III (N12)		04/82→10/87
MICRA C+C III (K12)		08/05→
MICRA I (K10)		12/82→11/92
MICRA II (K11)		01/92→12/07
MICRA III (K12)		03/02→06/10
MURANO I (Z50)		08/03→09/08
MURANO III (Z52)		10/14→
PATROL GR IV (Y60, GR)		08/87→02/98
PATROL III/1 Hardtop (K160)		11/79→02/89
PATROL III/1 Platform/Chassis (MQ, MK, GQ)		06/80→12/97
PATROL III/1 Station Wagon (W160)		11/79→02/89
PATROL III/2 Hardtop (K260)		10/84→04/98

...A45

NISSAN

PATROL III/2 Station Wagon (W260)		08/88→04/98
SILVIA (S12)		06/83→12/88
SILVIA (S110)		01/79→07/83
SKYLINE Coupe (R32)		03/89→01/95
SKYLINE Coupe (R33)		07/93→07/00
STANZA (T11)		08/81→12/85
STANZA Hatchback (T11)		08/81→12/85
TERRANO I (WD21)		07/86→02/96
URVAN Box (E23)		07/80→11/98
URVAN Box (E24)		06/86→05/97
URVAN Bus (E23)		07/80→11/88
URVAN Bus (E24)		06/86→05/97
VANETTE Box (C22)		10/86→12/11
VANETTE Bus (C22)		10/86→12/11

OPEL

ADMIRAL B		03/69→01/78
AGILA (A) (H00)		09/00→12/07
ASCONA B (81_, 86_, 87_, 88_)		09/75→08/81
ASCONA C (81_, 86_, 87_, 88_)		09/81→10/88
ASCONA C Hatchback (84_, 89_)		09/81→08/88
ASTRA F (56_, 57_)		09/91→09/98
ASTRA F CLASSIC Estate		01/98→01/05
ASTRA F CLASSIC Hatchback		01/98→08/02
ASTRA F CLASSIC Saloon		01/98→08/02
ASTRA F Convertible (53_B)		03/93→03/01
ASTRA F Estate (51_, 52_)		09/91→01/98
ASTRA F Hatchback (53_, 54_, 58_, 59_)		09/91→01/98
ASTRA F Van (55_)		10/91→01/99
CAMPO (TF_)		08/87→06/02
COMBO (71_)		07/94→10/01
CORSA B (73_, 78_, 79_)		03/93→12/02
CORSA B Box (73_)		08/99→09/00
CORSA B Estate (F35)		01/99→12/02
CORSA C (F08, F68)		09/00→12/09
CORSA C Box (F08, W5L)		09/00→
KADETT E (39_, 49_)		09/84→12/93
KADETT E Box (37_, 47_)		08/84→09/93
KADETT E Combo (38_, 48_)		01/86→07/94
KADETT E Convertible (43B_)		10/86→02/93
KADETT E Estate (35_, 36_, 45_, 46_)		09/84→08/91
KADETT E Hatchback (33_, 34_, 43_, 44_)		09/84→08/91
MANTA B (58_, 59_)		09/75→08/88
MANTA B CC (53_, 55_)		09/75→08/88
MONZA A (22_)		02/78→08/86
REKORD E (17_-19_, 11_, 14_, 16_)		08/77→08/86
REKORD E Estate (61_, 66_, 67_)		08/77→08/86
TIGRA (95_)		07/94→12/00
TIGRA TwinTop		06/04→

PEUGEOT

106 I (1A, 1C)		08/91→04/96
106 II (1)		04/96→05/05
106 Van (1_)		08/91→03/01
205 Box		02/83→05/97
205 I (741A/C)		02/83→10/87
205 I Convertible (741B, 20D)		04/86→11/95
205 II (20A/C)		01/87→12/00
305 II (581M)		10/82→07/90
305 II Break (581E)		10/82→07/90
309 I (10C, 10A)		10/85→12/89
309 II (3C, 3A)		07/89→12/93
406 (8B)		10/95→01/05
505 (551A)		05/79→10/96
505 Break (551D)		04/82→11/95
604 (561A_)		09/75→07/87
1007 (KM_)		04/05→

PORSCHE

911 (993)		10/93→09/97
911 Convertible (993)		07/94→09/97
911 Targa (993)		01/94→09/97

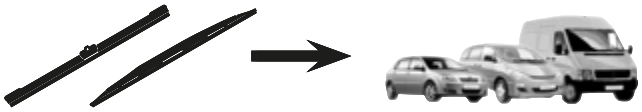

...A45

PORSCHE
968 06/91→11/95
968 Convertible 06/91→11/95

PROTON
GEN-2 PERSONA 01/07→07/16
SATRIA NEO 02/07→
WIRA Hatchback 01/00→

RENAULT
11 (B/C37_) 03/83→09/95
11 Box (S37_) 03/83→07/89
20 (127_) 10/75→12/83
21 Estate (K48_) 03/86→07/97
30 (127_) 02/75→03/86
CLIO I (B/C57_, 5/357_) 05/90→09/98
CLIO I Box (S57_) 01/91→09/98
CLIO II (BB0/1/2_, CB0/1/2_) 09/98→
CLIO II Box (SB0/1/2_) 09/98→
EXPRESS Pickup 07/95→10/99
MEGANE II (BM0/1_, CM0/1_) 07/01→10/12
MEGANE II Coupé-Cabriolet (EM0/1_) 09/03→03/10
MEGANE II Estate (KM0/1_) 08/03→08/12
MEGANE II Saloon (LM0/1_) 09/03→
RAPID / EXTRA Box (F40_, G40_) 07/85→11/01
SUPER 5 (B/C40_) 10/84→12/96
SUPER 5 Box (S40_) 10/84→12/96
THALIA I (LB0/1/2_) 02/98→
TWIZY (MAM_) 04/12→

ROVER
25 (RF) 09/99→06/06
45 (RT) 02/00→05/05
45 Saloon (RT) 02/00→05/05
200 (RF) 11/95→11/00
200 (XH) 03/85→09/89
200 Coupe (XW) 10/92→06/99
200 Hatchback (XW) 10/89→10/95
400 (RT) 05/95→03/00
400 (XW) 04/90→04/95
400 Hatchback (RT) 05/95→03/00
400 Tourer (XW) 09/93→11/98
CABRIOLET (XW) 04/90→11/99
COUPE 03/96→11/99
STREETWISE 08/03→05/05

SEAT
IBIZA I (021A) 06/84→12/93
INCA (6K9) 11/95→06/03

SKODA
FAVORIT (781) 05/89→09/94
FAVORIT Forman (785) 06/88→06/95

SMART
FORFOUR (454) 01/04→06/06
ROADSTER (452) 04/03→11/05
ROADSTER Coupe (452) 04/03→11/05

SSANGYONG
KORANDO (K4) 12/88→05/97
KORANDO (K4) Open Off-Road Vehicle 12/88→05/97
KORANDO (KJ) 12/96→11/06
KORANDO Cabrio (KJ) 12/96→11/06
MUSSO (FJ) 01/93→09/07
MUSSO SPORTS 08/04→
RODIUS 05/05→
STAVIC 02/05→

SUBARU
IMPREZA Coupe (GFC) 01/93→12/00
IMPREZA Estate 07/07→12/12
IMPREZA Estate (GF) 08/92→12/00
IMPREZA Saloon (GC) 08/92→09/01
JUSTY II (JMA, MS) 10/95→11/03
JUSTY III (G3X) 09/03→
LEGACY I (BC) 01/89→08/94
LEGACY I Estate (BC, BJF) 01/89→08/94
LEGACY IV (BL, BP) 09/03→12/15
LEGACY IV Estate (BL, BP, B13_) 09/03→12/09
OUTBACK (BL, BP) 09/03→06/10
SVX (CX) 09/92→12/97

...A45

SUZUKI
ALTO (HA24) 09/04→12/09
BALENO 02/16→
BALENO (EG) 03/95→12/09
BALENO Estate (EG) 04/95→04/05
BALENO Hatchback (EG) 03/95→05/02
CAPPUCINO (EA) 02/92→08/98
IGNIS (FH) 10/00→12/05
IGNIS II 09/03→
JIMNY (FJ) 07/98→
JIMNY Open Off-Road Vehicle (SN) 01/98→
LIANA (ER) 10/01→
LIANA Estate (ER) 07/01→12/07
LIANA Hatchback 06/01→
SWIFT Convertible (SF413) 09/91→10/96
SWIFT II Hatchback (EA, MA) 03/89→12/05
SWIFT II Saloon (AH, AJ) 03/89→05/01
SWIFT III (MZ, EZ) 02/05→
VITARA (ET, TA) 07/88→08/99
VITARA Cabrio (ET, TA) 07/88→10/02
WAGON R 07/03→05/08
WAGON R+ (EM) 10/97→10/00
WAGON R+ (MM) 05/00→
X-90 (EL) 09/95→12/97

TOYOTA
4 RUNNER (RN5_, LN5_, VZN6_, RN7_, RN6_) 07/84→10/89
AVENSIS (_T22_, ZZT22_) 09/97→02/03
AVENSIS Liftback (_T22_, ST22_) 09/97→02/03
AVENSIS Station Wagon (_T22_, ZZT22_) 09/97→02/03
CAMRY Liftback (CV1_, _V1_) 01/83→01/88
CARINA E (_T19_) 04/92→09/97
CARINA E Saloon (_T19_) 04/92→09/97
CARINA E Sportswagon (_T19_) 02/92→09/97
CARINA II (_T15_) 10/83→05/88
CARINA II (_T17_) 12/87→06/92
COROLLA (_E10_) 06/91→11/99
COROLLA (_E11_) 04/97→06/02
COROLLA (CDE12_, ZZE12_, NDE12_, ZDE12_) 01/01→12/07
COROLLA Compact (_E10_) 05/92→11/99
COROLLA Compact (_E11_) 04/97→01/02
COROLLA Liftback (_E10_) 05/92→04/97
COROLLA Liftback (_E11_) 04/97→01/02
COROLLA Saloon (_E12J_, _E12T_) 08/00→03/08
COROLLA Wagon (__E11_) 04/97→10/01
COROLLA Wagon (_E10_) 05/92→04/97
HIACE III Box (YH7_, LH6_, LH7_, LH5_, YH5_, YH6_) 08/87→07/06
HIACE III Wagon (LH1_, RZH1_) 08/87→12/04
HIACE IV Box (LXH1_, RZH1_, LH1_) 08/95→
HIACE IV Bus (LH1_) 08/95→
LAND CRUISER (LJ12_, KZJ12_, TRJ12_, KDJ12_, GRJ12_) 09/02→08/10
LAND CRUISER 80 (_J8_) 01/90→02/98
LAND CRUISER 90 (_J9_) 04/95→
LAND CRUISER 100 (FZJ1_, UZJ1_) 01/98→08/07
LAND CRUISER Pickup (_J7_) 11/84→
PASEO Convertible (EL54) 10/96→01/98
PASEO Coupe (EL54) 08/95→12/99
PREVIA (MCR3_, ACR3_, CLR3_) 02/00→01/06
RAV 4 I (SXA1_) 01/94→09/00
RAV 4 I Cabrio (SXA1_) 12/97→06/00
SIENNA (MCL10_) 08/97→12/02
SUPRA (JZA80) 05/93→07/02

VW
CADDY II Box (9K9A) 11/95→01/04
CADDY II Estate (9K9B) 11/95→01/04
CADDY II Pickup (9U7) 06/96→12/00
CORRADO (53I) 08/87→12/95
GOLF II (19E, 1G1) 08/83→12/92
GOLF II Van (19E, 1G1) 08/83→07/91
JETTA II (19E, 1G2, 165) 08/83→12/92

...A45

VW
PASSAT (32B) 11/79→06/89
PASSAT Saloon (32B) 08/84→06/89
PASSAT Variant (32B) 08/80→06/89
POLO CLASSIC (6KV2) 11/95→07/06
POLO Variant (6KV5) 04/97→09/01
POLO VIVO Hatchback 02/10→
POLO VIVO Saloon 02/10→
SANTANA (32B) 08/81→12/85
SCIROCCO (53) 02/74→07/80
TARO 04/89→03/97

A45+AK1

ALFA ROMEO
ALFETTA GT (116_) 01/74→01/86

BMW
3 (E21) 06/75→03/84
5 (E12) 03/72→08/81
6 (E24) 10/75→04/89
7 (E23) 05/77→04/88
M1 (E26) 05/79→05/83

DAIHATSU
APPLAUSE I (A101, A111) 06/89→07/97
APPLAUSE II (A101) 07/97→05/00
CHARADE I (G10) 10/77→05/84
CHARADE II (G11, G30) 01/83→05/87
CHARADE III (G100, G101, G102) 01/87→07/93
CHARMANT (A) 10/81→07/87

FORD
GRANADA (GGTL, GGFL) 01/72→08/77
GRANADA (GU) 08/77→08/85
GRANADA Estate (GNU) 08/77→08/85

HONDA
PRELUDE II (AB) 01/83→09/87

JEEP
CHEROKEE (XJ) 09/83→09/01

LANCIA
DELTA I (831_) 09/79→01/94
TREVI (828_) 05/80→01/87

MAZDA
323 II (BD) 10/80→10/89
323 II Hatchback (BD) 06/80→10/89
626 I (CB) 09/78→10/82
626 II (GC) 11/82→10/87
626 II Hatchback (GC) 11/82→10/87
929 I (LA) 09/78→07/86
929 II (HB) 12/81→09/87
929 II Coupe (HB) 12/81→09/87
929 II Estate (HV) 01/83→12/87
RX 5 06/75→12/81
RX 7 I (SA) 03/78→03/86

MITSUBISHI
COLT II (C1_A) 10/82→04/88
CORDIA (A21_A, AB) 10/82→07/89
GALANT II (A16_) 09/80→05/84
GALANT II Station Wagon (A16_V) 09/80→05/84
LANCER I (A17_) 09/79→02/83
LANCER III (C1_A, C6_A) 11/83→06/90
SAPPORO II (A16_A) 08/80→09/84
SAPPORO III (E16A) 06/87→08/90
STARION (A18_A) 05/82→06/90
TREDIA (A21_) 09/82→03/88

NISSAN
SILVIA (S12) 06/83→12/88
SILVIA (S110) 01/79→07/83

PORSCHE
924 11/75→08/89
928 09/77→11/95
944 06/81→07/91

PROTON
AEROBACK MPI Hatchback (C2_A, C9_L) 10/88→12/02
SALOON MPI (C2_S) 01/89→11/96

ROVER
2000-3500 Hatchback (SD1) 06/76→10/86

...A45+AK1

SUBARU
LEONE II 11/84→12/94
LEONE II Estate 09/83→12/94
XT Coupe (XT) 11/84→12/91

TOYOTA
4 RUNNER (RN10_, VZN13_, VZN10_, RN13_) 08/87→03/96
CAMRY (_CV1_, _XV1_, _V1_) 06/91→09/97
CAMRY (_V2_) 10/86→02/93
CAMRY Liftback (CV1_, _V1_) 01/83→01/88
CAMRY Saloon (CV1_, _V1_) 02/83→07/88
CAMRY Station Wagon (_V2_) 11/86→02/93
CARINA II (_T15_) 10/83→05/88
CARINA II (_T17_) 12/87→06/92
CARINA II Saloon (_T15_) 08/83→05/88
CARINA II Saloon (_T17_) 12/87→06/92
CARINA II Station Wagon (_T17_, CT17_, ST17_) 12/87→04/92
CARINA Station Wagon (CA6_, TA4K, TA6_, TA6K) 04/78→09/83
CELICA (AT16_, ST16_) 08/85→08/89
CELICA Convertible (AT18_, ST18_) 10/89→11/93
CELICA Convertible (ST16_, AT16_) 08/85→08/89
CELICA Coupe (_A6_) 08/81→12/85
CELICA Coupe (AT18_, ST18_) 09/89→12/94
CELICA Coupe (ST16_, AT16_) 09/85→08/89
CELICA Hatchback (ST16_, AT16_) 08/85→12/89
CELICA SUPRA (_A6_) 08/81→12/85
COROLLA (_E8_) 06/83→06/89
COROLLA (_E9_) 05/87→09/94
COROLLA Compact (_E9_) 05/87→10/95
COROLLA Coupe (AE86) 05/83→07/87
COROLLA FX Compact (E8B) 08/84→05/88
COROLLA Liftback (_E8_) 05/82→05/89
COROLLA Liftback (_E9_) 07/87→10/95
COROLLA Station Wagon (_E9_) 05/87→10/95
HIACE II Box (LH5_, YH7_, LH7_, LH6_, YH6_, YH5_) 12/82→11/89
HIACE II Wagon (LH7_, LH5_, LH6_, YH7_, YH6_, YH5_) 11/82→11/89
LAND CRUISER (_J6_) 11/80→12/91
LAND CRUISER (PZJ7_, KZJ7_, HZJ7_, BJ7_, LJ7_, RJ7_) 03/84→
LAND CRUISER Hardtop (_J7_) 07/90→05/96
LITEACE Box (_R2__V) 01/92→01/95
LITEACE Bus (_R2_LG) 01/92→01/98
MR 2 I (AW1_) 06/84→06/90
MR 2 II (SW2_) 12/89→11/99
STARLET (_P8_) 12/89→03/96
SUPRA (JZA70_, GA70_, MA70) 01/86→05/93
TERCEL (AL2_) 09/82→01/88
TERCEL Estate (AL2_) 08/82→12/88

VOLVO
260 Coupe (P262) 09/75→12/85
340-360 (343, 345) 08/75→07/91
340-360 Saloon (344) 08/79→07/91

A48

ALFA ROMEO
145 (930_) 07/94→01/01
146 (930_) 12/94→01/01
155 (167_) 01/92→12/97
166 (936_) 09/98→06/07

AUDI
A3 (8L1) 09/96→06/03

CHEVROLET
LACETTI (J200) 03/03→
LACETTI Estate (J200) 03/05→
LACETTI Saloon 03/03→03/13
NUBIRA Estate 01/05→12/11
NUBIRA Saloon 01/05→12/11
ORLANDO (J309) 12/10→
TACUMA 03/05→

CHRYSLER
NEON II 08/99→12/06

...A48

CITROËN

C15 (VD-_)		10/84→10/06
C15 Estate		04/87→08/00
VISA		09/78→03/91
VISA Convertible		03/83→10/88
XANTIA (X1)		03/93→07/99
XANTIA (X2)		01/98→04/03
XANTIA Break (X2)		01/98→04/03

DACIA

NOVA		04/96→03/03
SOLENZA (B41_)		02/03→
SUPERNOVA		04/00→03/03

DAEWOO

ESPERO (KLEJ)		10/91→09/99
LANOS (KLAT)		05/97→
LANOS Saloon (KLAT)		02/97→
LEGANZA (KLAV)		03/97→04/04
NUBIRA Saloon (KLAN)		07/03→
NUBIRA Wagon (KLAN)		07/03→
REZZO / TACUMA (KLAU)		06/00→

DAIHATSU

CHARADE IV (G200, G202)		01/93→09/00
CHARADE IV Saloon (G203)		03/93→01/01
EXTOL Box		07/00→
EXTOL Bus (S22_, S23_)		07/00→11/11
MATERIA (M4_)		10/06→
SIRION (M1)		04/98→04/05

DODGE

NEON II		08/99→
NITRO		09/06→12/12

FIAT

BARCHETTA (183_)		03/95→05/05
BRAVA (182_)		10/95→06/03
BRAVO I (182_)		10/95→10/01
CINQUECENTO (170_)		07/91→07/99
COUPE (175_)		11/93→08/00
CROMA (154_)		12/85→12/96
FREEMONT (JC_, JF_)		08/11→
MAREA (185_)		09/96→12/07
MAREA Weekend (185_)		09/96→12/07
SEICENTO / 600 (187_)		01/98→01/10
SEICENTO / 600 Van (287_)		01/98→01/10
STILO (192_)		10/01→11/10
STILO Multi Wagon (192_)		01/03→08/08
TIPO (160_)		07/87→10/97

FORD

FIESTA Box (F3L, F5L)		07/91→02/96
FIESTA Box (J5_, J3_)		02/96→
FIESTA Box (JV_)		05/98→08/03
FIESTA III (GFJ)		01/89→01/97
FIESTA IV (JA_, JB_)		08/95→09/02
FOCUS (DAW, DBW)		10/98→12/07
FOCUS Estate (DNW)		02/99→12/07
FOCUS Saloon (DFW)		02/99→12/07
KA (RB_)		09/96→11/08
KA Van (RB)		05/02→05/05
MAVERICK		02/01→
MONDEO III (B5Y)		10/00→03/07
PUMA (EC_)		03/97→06/02
STREET KA (RL2)		03/03→07/05

HONDA

ACCORD IV (CB)		11/89→12/93
ACCORD IV Aerodeck (CB)		09/89→12/93
ACCORD IV Coupe (CB, CC)		05/89→12/93
ACCORD VI (CG, CK)		03/97→12/03
ACCORD VI Hatchback (CH)		12/99→12/02
CIVIC II Shuttle (EE)		01/88→02/95
CIVIC IV Hatchback (EC, ED, EE)		09/87→10/93
CIVIC IV Saloon (ED)		09/87→10/93
CIVIC VII Coupe (EM2)		02/01→12/05
CR-V I (RD)		10/95→02/02
CRX I (AF, AS)		10/83→10/87
CRX II (ED, EE)		10/87→02/92
FR-V (BE)		08/04→
INTEGRA (DC5)		08/01→
INTEGRA Coupe (DC2, DC4)		07/93→11/01

...A48

HONDA

LEGEND II (KA7)		01/91→03/96
LEGEND II Coupe (KA8)		01/91→03/96
LEGEND III (KA9)		02/96→
PRELUDE III (BA)		04/86→11/96
PRELUDE IV (BB)		12/91→02/97

HYUNDAI

GENESIS (BH)		01/08→12/15
GENESIS (DH)		06/14→
GENESIS Coupe		01/08→
LANTRA I (J-1)		10/90→11/95
S COUPE (SLC)		02/90→05/96
SONATA IV (EF)		03/98→12/05
SONATA V (NF)		12/04→11/12

INFINITI

FX ('08)		07/08→
G20		01/90→12/97
M (Y51)		03/10→
M30 Convertible		01/90→12/93
M30 Coupe		01/89→12/93
Q60 Coupe		09/16→
Q70 (Y51)		03/13→
QX70		08/13→

ISUZU

D-MAX (8DH)		05/02→06/12
D-MAX (TFR, TFS)		06/12→
D-MAX Platform/Chassis		06/12→
D-MAX Platform/Chassis (8DH)		01/07→06/12
KB ('02)		07/02→

JAGUAR

X-TYPE (CF1_)		03/01→11/09
X-TYPE Estate (CF1_)		09/03→12/09

JEEP

CHEROKEE (KJ)		03/01→01/08
LIBERTY		01/08→

KIA

CARENS I (FC)		06/99→10/02
CARENS II (FJ)		07/02→
CERATO II (TD)		01/09→
CERATO II Saloon (TD)		01/09→
CERATO KOUP (TD)		01/09→
CLARUS (K9A)		05/96→11/01
CLARUS Estate (GC)		05/98→
K2500 (SD)		06/01→
K2900		01/08→
MENTOR		01/95→10/97
MENTOR Saloon		01/92→09/01
SHUMA (FB)		09/96→12/01
SHUMA II (FB)		05/01→08/04
SHUMA II Saloon (FB)		05/01→05/04
SHUMA Saloon (FB)		03/96→10/01

LANCIA

DEDRA (835_)		01/89→07/99
DEDRA SW (835_)		07/94→07/99
DELTA II (836_)		06/93→09/99

LAND ROVER

RANGE ROVER II (LP_)		07/94→03/02

LEXUS

ES (_V4_)		03/06→06/12
ES (MCV_, VZV_)		10/96→06/08
GS (JZS147_)		01/93→08/97
IS I (JCE1_, GXE1_)		04/99→07/05
IS SportCross		10/01→10/05

MAZDA

3 (BL)		12/08→09/14
3 Saloon (BL)		12/08→
121 III (JASM, JBSM)		03/96→04/03
323 F V (BA)		07/94→09/98
323 F VI (BJ)		09/98→05/04
323 S VI (BJ)		05/98→05/04
626 III (GD)		06/87→05/92
626 III Coupe (GD)		06/87→05/92
626 III Hatchback (GD)		06/87→05/92
626 III Station Wagon (GV)		09/87→10/98
626 V (GF)		05/97→12/02
626 V Hatchback (GF)		05/97→12/02

...A48

MAZDA

626 V Station Wagon (GW)		01/98→12/02
929 III (HC)		05/87→06/91
TRIBUTE (EP)		03/00→05/08

MERCEDES-BENZ

S-CLASS (W116)		08/72→07/80
SL (R107)		05/71→12/89
SL Coupe (C107)		01/72→08/85

MINI

MINI (F55)		09/13→
MINI (F56)		04/13→
MINI (R50, R53)		06/01→09/06
MINI (R56)		11/05→11/13
MINI CLUBMAN (R55)		10/06→06/14
MINI Convertible (F57)		11/14→
MINI Convertible (R52)		07/04→11/07
MINI Convertible (R57)		10/07→06/15

MITSUBISHI

COLT V (CJ_, CP_)		09/95→09/03
ECLIPSE II (D3_A)		04/94→04/99
GALANT IV (E3_A)		11/88→12/92
GALANT IV Saloon (E3_A)		11/87→03/93
GALANT V (E5_A, E7_A, E8_A)		11/92→10/96
GALANT V Saloon (E5_A, E7_A, E8_A)		11/92→12/98
L 200 (K7_T, K6_T)		01/96→12/07
L 200 (KB_T, KA_T)		01/04→12/15
L 200 Platform/Chassis (K6_T, K7_T)		01/96→12/06
LANCER VI (CJ-CP_)		09/95→08/03
MIRAGE Hatchback (CJ_A)		09/95→07/03
MIRAGE Saloon (CK_A)		09/95→07/03
PAJERO / SHOGUN (II) (V3_W, V2_W, V4_W)		12/90→10/99
PAJERO / SHOGUN PININ (H6_W, H7_W)		03/99→06/07
PAJERO / SHOGUN Soft Top (II) (V2_W, V4_W)		12/90→04/00
SIGMA (F2_A, F1_A)		10/90→07/96
SIGMA Station Wagon (F0_W)		06/92→10/96

NISSAN

100 NX (B13)		03/90→01/96
300 ZX (Z31)		01/84→10/90
300 ZX (Z32)		09/89→12/00
ALMERA I (N15)		07/95→07/00
ALMERA I Hatchback (N15)		07/95→01/01
BLUEBIRD (T72 , T12)		12/85→12/90
BLUEBIRD (U11)		11/83→05/90
BLUEBIRD Hatchback (T72, T12)		12/85→11/92
BLUEBIRD Saloon (910)		01/80→06/86
BLUEBIRD Station Wagon (WU11)		11/83→12/90
CHERRY III (N12)		04/82→10/87
LAUREL (JC32)		11/84→06/90
NAVARA (D21)		11/85→03/08
NAVARA (D22_)		01/97→
NAVARA Platform/Chassis (D21)		09/85→04/97
NAVARA Platform/Chassis (D22)		03/97→
NP300 NAVARA (D40)		10/04→
NP300 NAVARA Platform/Chassis (D40)		08/08→
PATHFINDER III (R51)		01/05→
PATHFINDER IV (R52)		09/12→
PATROL GR V Wagon (Y61)		06/97→
PICK UP II (D21)		09/85→02/98
PICK UP III (D22)		01/97→
PICKUP / NP300 PICKUP III (D22)		04/08→
PRAIRIE (M10, NM10)		12/82→10/88
PRAIRIE PRO (M11)		10/88→10/98
PRIMERA (P10)		06/90→06/96
PRIMERA (P12)		01/02→
PRIMERA Estate (WP12)		01/02→
PRIMERA Hatchback (P10)		06/90→06/96
PRIMERA Hatchback (P12)		01/02→
PRIMERA Traveller (W10)		07/90→03/98
SUNNY III (N14)		05/90→12/96
SUNNY III Box (Y10)		11/90→03/00

...A48

NISSAN

SUNNY III Hatchback (N14)		10/90→07/95
SUNNY III Liftback (N14)		10/90→10/95
SUNNY III Traveller (Y10)		11/90→03/00
URVAN Box (E24)		06/86→05/97
URVAN Bus (E24)		06/86→05/97
VANETTE Box (C22)		10/86→12/11
VANETTE Bus (C22)		10/86→12/11

OPEL

ASTRA G Box (F70)		01/99→04/05
ASTRA G CLASSIC Caravan (F35)		03/04→07/09
ASTRA G CLASSIC Saloon (T98)		03/04→07/09
ASTRA G Convertible (F67)		03/01→10/05
ASTRA G Coupe (F07_)		03/00→05/05
ASTRA G Estate (F35_)		02/98→12/09
ASTRA G Hatchback (F48_, F08_)		02/98→12/09
ASTRA G Saloon (F69_)		09/98→12/09
CALIBRA A (85_)		06/90→07/97
FRONTERA A (5_MWL4)		03/92→10/98
FRONTERA A Sport (5_SUD2)		03/92→10/98
FRONTERA B (6B_)		10/98→09/02
OMEGA A (16_, 17_, 19_)		09/86→05/94
OMEGA A Estate (66_, 67_)		09/86→05/94
OMEGA B (25_, 26_, 27_)		03/94→07/03
OMEGA B Estate (21_, 22_, 23_)		03/94→07/03
SENATOR B (29_)		09/87→09/93
SIGNUM		05/03→12/08
VECTRA A (86_, 87_)		08/88→12/95
VECTRA A Hatchback (88_, 89_)		04/88→12/95
VECTRA B (36_)		09/95→04/02
VECTRA B Estate (31_)		11/96→07/03
VECTRA B Hatchback (38_)		10/95→07/03
VECTRA C		04/02→
VECTRA C Estate		10/03→
VECTRA C GTS		08/02→

RENAULT

19 I (B/C53_)		01/88→09/94
19 II (B/C53_)		01/91→06/01
FUEGO (136_)		02/80→11/92
LAGUNA I (B56_, 556_)		11/93→08/02
LAGUNA I Grandtour (K56_)		09/95→08/02
LAGUNA III (BT0/1)		10/07→
TRAFIC Box (T1, T3, T4)		03/80→04/89
TRAFIC Bus (T5, T6, T7)		03/80→04/89
TRAFIC Platform/Chassis (P6)		03/80→04/89

ROVER

800 (XS)		10/86→02/99
800 Hatchback (XS)		10/86→02/99

SEAT

AROSA (6H)		05/97→06/04
CORDOBA (6K1, 6K2)		02/93→10/02
CORDOBA (6K2)		06/99→10/02
CORDOBA (6L2)		09/02→11/09
CORDOBA Vario (6K5)		06/99→12/02
CORDOBA Vario (6K5)		08/96→12/02
IBIZA I (021A)		06/84→12/93
IBIZA II (6K1)		03/93→02/02
IBIZA III (6K1)		08/99→02/02
IBIZA IV (6L1)		02/02→11/09
LEON (1M1)		11/99→06/06
TOLEDO II (1M2)		10/98→05/06

SKODA

FABIA (6Y2)		08/99→03/08
FABIA Combi (6Y5)		04/00→12/07
FABIA Praktik		07/01→12/07
FABIA Saloon (6Y3)		10/99→12/07
OCTAVIA (1U2)		09/96→12/10
OCTAVIA Combi (1U5)		07/98→12/10
SUPERB (3U4)		12/01→03/08

SSANGYONG

ACTYON I		11/05→
ACTYON II		08/12→
ACTYON SPORTS I (QJ)		11/05→
ACTYON SPORTS II		10/12→
KYRON		05/05→

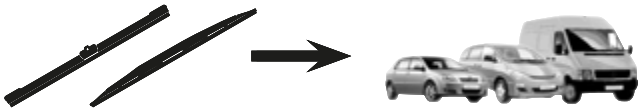

...A48

SUBARU

FORESTER (SF)		03/97→09/02
FORESTER (SG)		06/02→10/12
JUSTY III (G3X)		09/03→
LEGACY II (BD, BG)		03/94→10/99
LEGACY II Estate (BD, BG)		02/94→12/99
LEGACY OUTBACK (BG)		01/96→12/99
VIVIO		03/92→04/00

SUZUKI

ALTO (HA11)		10/93→09/98
ALTO (HA12, HA23)		10/97→09/04
GRAND VITARA I (FT)		03/98→08/06
GRAND VITARA I Convertible (GT)		03/98→09/05
GRAND VITARA II (JT)		04/05→
IGNIS (FH)		10/00→12/05
IGNIS II		09/03→
SWIFT V (AZ)		01/17→
VITARA (ET)		12/03→12/05
VITARA Cabrio (ET)		12/03→12/05
XL7 (JC)		09/06→12/09

TOYOTA

CAMRY (_CV2_, _XV2_)		08/96→11/01
CAMRY (MCV3_, ACV3_, _XV3_)		08/01→11/06
CAMRY Station Wagon (_XV1_, _CV1_, _V10)		06/91→08/97
CELICA (ST20_, AT20_)		09/93→11/99
CELICA Convertible (AT20_, ST20_)		11/93→08/99
HILUX III Pickup (KUN_, TGN_, LAN_, GGN_)		08/04→
LAND CRUISER 90 (_J9_)		04/95→
LAND CRUISER 100 (FZJ1_, UZJ1_)		01/98→08/07
MR 2 II (SW2_)		12/89→11/99
MR 2 III (ZZW3_)		10/99→06/07
RAV 4 II (CLA2_, XA2_, ZCA2_, ACA2_)		06/00→11/05
SIENNA (MCL2_, GSL2_)		01/03→12/09

VW

BORA (1J2)		10/98→09/05
BORA Estate (1J6)		05/99→05/05
CORRADO (53I)		08/87→12/95
GOLF III (1H1)		08/91→07/98
GOLF III Cabriolet (1E7)		07/93→05/98
GOLF III Van (1H1)		08/91→12/97
GOLF III Variant (1H5)		07/93→04/99
GOLF IV (1J1)		08/97→06/05
GOLF IV Cabriolet (1E7)		06/98→06/02
GOLF IV Van (1J1)		05/00→05/04
GOLF IV Variant (1J5)		05/99→06/06
LT 28-35 I Box (281-363)		04/75→06/96
LT 28-35 I Bus (281-363)		04/75→06/96
LT 28-35 I Platform/Chassis (281-363)		04/75→06/96
LT 40-55 I Box (291-512)		04/75→06/96
LT 40-55 I Platform/Chassis (293-909)		04/75→06/96
LUPO (6X1, 6E1)		09/98→07/05
POLO (6N1)		10/94→10/99
POLO (6N2)		10/99→10/01
POLO (9N_)		10/01→01/12
POLO Box (6NF)		09/94→12/99
SCIROCCO (53B)		08/80→07/92
VENTO (1H2)		11/91→09/98

A48+AK1

MITSUBISHI

GALANT III (E1_A)		10/83→04/90

PORSCHE

928		09/77→11/95
944 Convertible		12/88→07/91

A51

ALFA ROMEO

8C (920_)		01/07→10/09
8C SPIDER (920_)		01/08→10/10
ALFASUD Sprint (902_)		09/76→12/89

...A51

ALFA ROMEO

AR 6 Box (280_)		04/85→12/89
AR 6 Bus (280_)		04/85→12/89
ARNA (920_)		03/83→12/86
SPIDER (916_)		09/94→04/05

ALPINA

B3 (E30)		09/87→06/92
B3 (E36)		04/93→05/99
B3 Convertible (E30)		09/87→06/92
B3 Convertible (E36)		04/93→03/99
B3 Coupe (E36)		04/96→03/99
B3 Estate (E30)		09/87→06/92
B3 Estate (E36)		04/93→03/99
B6 (E30)		11/83→12/90
B6 (E36)		03/92→07/93
B8 (E36)		01/95→03/98
B8 Convertible (E36)		01/95→03/98
B8 Coupe (E36)		01/95→03/98
B8 Estate (E36)		01/95→03/98
C1 (E30)		08/83→06/88
C2 (E30)		07/85→03/88
C2 Convertible (E30)		02/86→07/87
ROADSTER S (Z4)		07/03→12/05

BMW

3 (E30)		09/82→03/92
3 (E36)		09/90→02/98
3 Compact (E36)		03/94→08/00
3 Convertible (E30)		12/85→10/93
3 Convertible (E36)		03/93→04/99
3 Coupe (E36)		03/92→04/99
3 Touring (E30)		07/87→10/94
3 Touring (E36)		01/95→10/99
X3 (E83)		01/03→12/11
Z1		06/88→06/91
Z3 (E36)		10/95→01/03
Z3 Coupe (E36)		04/97→06/03
Z4 (E85)		02/03→12/09
Z4 Coupe (E86)		03/06→01/09
Z4 ROADSTER (E89)		05/09→

CHEVROLET

BLAZER S10 ('93)		10/93→09/05
BLAZER S10 ('96)		08/96→12/10
CORVETTE Convertible (1YY)		02/83→09/97
EPICA (KL1_)		01/05→
EVANDA		03/05→

CHRYSLER

CROSSFIRE		07/03→12/08
CROSSFIRE Roadster		05/04→12/08
GRAND VOYAGER V (RT)		10/07→
PT CRUISER (PT_)		06/00→12/10
PT CRUISER Convertible		06/00→12/10

CITROËN

AXEL		10/81→03/91
BX (XB-_)		10/82→12/94
BX Break (XB-_)		04/83→12/94
C25 Box (280_, 290_)		07/81→03/94
C25 Bus (280_, 290_)		07/81→02/94
C25 Platform/Chassis (280_, 290_)		07/81→03/94
C35 Box		11/73→01/94
C35 Bus		11/73→01/94
C35 Pickup		11/73→01/94
DISPATCH (U6U)		06/94→12/06
DISPATCH MPV		01/07→
DISPATCH Platform/Chassis		07/11→
DISPATCH Platform/Chassis		10/99→10/06
DISPATCH Van/Box		01/07→
DISPATCH Van/Box (BS_, BT_, BY_, BZ_)		06/94→10/06
SAXO (S0, S1)		02/96→04/04
SYNERGIE		03/94→07/02
XANTIA (X1)		03/93→07/99
XANTIA Break (X1)		06/95→01/98
XSARA (N1)		04/97→12/05
XSARA Box		05/98→08/05
XSARA Break (N2)		10/97→03/10
XSARA Coupe (N0)		01/98→04/05

...A51

DACIA

DUSTER		04/10→
DUSTER Box		04/11→
LOGAN (LS_)		09/04→
LOGAN EXPRESS (FS_)		03/09→
LOGAN II		10/12→
LOGAN MCV (KS_)		02/07→
LOGAN MCV II		02/13→
LOGAN Pickup (US_)		03/08→
SANDERO		06/08→
SANDERO II		10/12→

DAEWOO

EVANDA (KLAL)		08/02→
MUSSO (FJ)		07/98→
NUBIRA (KLAJ)		04/97→
NUBIRA Saloon (KLAJ)		04/97→
NUBIRA Wagon (KLAJ)		04/97→
REXTON (GAB_)		04/02→

DAIHATSU

GRAN MOVE (G3)		10/96→
MATERIA (M4_)		10/06→
SIRION (M3_)		01/05→
TERIOS (J1_)		05/97→10/06
TREVIS		06/06→

DODGE

CARAVAN ('08)		01/08→

FIAT

COUPE (175_)		11/93→08/00
CROMA (154_)		12/85→12/96
DUCATO Box (280_)		01/82→09/90
DUCATO Box (290_)		03/89→05/94
DUCATO Panorama (280_)		07/82→08/90
DUCATO Panorama (290_)		01/90→05/94
DUCATO Platform/Chassis (280_)		07/82→08/90
DUCATO Platform/Chassis (290_)		03/89→05/94
SCUDO (270_, 272_)		01/07→
SCUDO Box (220_)		02/96→12/06
SCUDO Box (270_, 272_)		01/07→
SCUDO Combinato (220_)		02/96→12/06
SCUDO Platform/Chassis (220_)		09/96→12/06
SCUDO Platform/Chassis (270_, 272_)		01/07→
TALENTO Box (290_)		03/89→03/94
TALENTO Bus (290_)		03/89→03/94
TALENTO Platform/Chassis (290_)		03/89→03/94
TEMPRA (159_)		03/90→12/98
TEMPRA S.W. (159_)		03/90→10/97
ULYSSE (220_)		06/94→08/02

FORD

COUGAR (EC_)		08/98→12/01
ESCORT '91 Express (AVL)		07/90→12/94
ESCORT '95 Box (AVL)		01/95→06/01
ESCORT CLASSIC (AAL, ABL)		10/98→07/00
ESCORT CLASSIC Turnier (ANL)		02/99→07/00
ESCORT V (GAL)		06/89→12/92
ESCORT V Convertible (ALL)		07/90→12/92
ESCORT V Estate (GAL, AVL)		07/90→12/92
ESCORT VI (GAL)		09/92→09/96
ESCORT VI Convertible (ALL)		01/92→01/95
ESCORT VI Estate (GAL)		09/92→01/95
ESCORT VI Saloon (GAL)		08/93→01/95
ESCORT VII (GAL, AAL, ABL)		01/95→10/02
ESCORT VII Convertible (ALL)		02/95→08/00
ESCORT VII Estate (GAL, ANL)		01/95→10/02
ESCORT VII Saloon (GAL, AFL)		01/95→08/02
GRANADA (III)		04/85→12/94
GRANADA III Estate		05/88→09/94
MAVERICK (UDS, UNS)		02/93→04/98
MONDEO I (GBP)		02/93→08/96
MONDEO I Estate (BNP)		01/93→08/96
MONDEO I Saloon (GBP)		02/93→08/96
MONDEO II (BAP)		08/96→09/00
MONDEO II Estate (BNP)		08/96→09/00
MONDEO II Saloon (BFP)		08/96→09/00

...A51

FORD

MONDEO III (B5Y)		10/00→03/07
MONDEO III Estate (BWY)		10/00→03/07
MONDEO III Saloon (B4Y)		10/00→03/07
ORION III (GAL)		01/90→09/96
P 100 II		10/87→12/92
SCORPIO II (GFR, GGR)		10/94→08/98
SCORPIO II Estate (GNR, GGR)		10/94→08/98
SIERRA (GBG, GB4)		01/87→02/93
SIERRA Estate (BNC)		08/82→12/86
SIERRA Estate (BNG)		01/87→02/93
SIERRA Hatchback (GBC)		08/82→02/87
SIERRA Hatchback (GBC, GBG)		01/87→03/93
TOURNEO CONNECT		06/02→12/13
TRANSIT CONNECT (P65_, P70_, P80_)		06/02→

HONDA

ACCORD V (CC, CD)		06/92→12/97
ACCORD V (CE, CF)		09/95→10/98
ACCORD V Aerodeck (CE)		04/93→02/98
ACCORD V Coupe (CD)		04/93→12/98
CIVIC V Coupe (EJ)		08/93→03/96
CIVIC V Hatchback (EG)		10/91→11/95
CIVIC V Saloon (EG, EH)		10/91→12/95
CIVIC VI Aerodeck (MB, MC)		04/98→02/01
CIVIC VI Coupe (EJ, EM1)		03/96→12/00
CIVIC VI Fastback (MA, MB)		09/94→02/01
CIVIC VI Hatchback (EJ, EK)		10/95→02/01
CIVIC VI Saloon (EJ, EK)		06/95→03/01
CR-V II (RD_)		09/01→12/06
CRX III (EH, EG)		03/92→12/98
CR-Z (ZF1)		06/10→
ELEMENT		07/02→12/11
HR-V (GH)		03/99→
INSIGHT (ZE)		04/00→12/06
INTEGRA (DC5)		08/01→
INTEGRA Coupe (DC2, DC4)		07/93→11/01
JAZZ II (GD, GE3)		06/01→12/08
JAZZ Saloon		05/03→
LEGEND II (KA7)		01/91→03/96
LEGEND II Coupe (KA8)		01/91→03/96
LEGEND III (KA9)		02/96→
LOGO (GA3)		03/99→03/02
NSX Convertible (NA)		03/95→09/05
NSX Coupe (NA)		06/90→09/05
PRELUDE IV (BB)		12/91→02/97
PRELUDE V (BB)		10/96→04/01
S2000 (AP)		03/99→

HYUNDAI

ACCENT I (X-3)		05/94→01/00
ACCENT II (LC)		09/99→12/06
ACCENT II Saloon (LC)		09/99→12/06
ACCENT III (MC)		11/05→12/10
ACCENT Saloon (X-3)		05/94→01/00
AMICA		01/97→
COUPE (GK)		01/01→11/09
COUPE (RD)		06/96→04/02
ELANTRA (XD)		03/00→08/06
ELANTRA Saloon (HD)		11/05→12/11
ELANTRA Saloon (XD)		03/00→09/06
GRANDEUR (HG)		01/11→
GRANDEUR (TG)		06/03→
H-1 Box		10/97→04/08
H-1 Platform/Chassis		06/00→10/05
H-1 / STAREX		06/97→
HIGHWAY VAN		03/00→03/04
i800		02/08→
iLoad		02/08→
LANTRA I (J-1)		10/90→11/95
LANTRA II (J-2)		06/95→12/00
LANTRA II Wagon (J-2)		06/95→10/00
SANTA FÉ I (SM)		11/00→03/06
SONATA III (Y-3)		09/92→12/98
TERRACAN (HP)		06/01→03/08
XG (XG)		12/98→12/05
XG Saloon		09/00→12/05

INFINITI

FX ('02)		09/02→12/08

...A51

INFINITI

G20		01/90→12/97
I30		01/97→
M30 Convertible		01/90→12/93
M30 Coupe		01/89→12/93
QX4		01/97→

ISUZU

IMPULSE		01/90→12/93
TROOPER		05/98→08/04
TROOPER (UB)		08/91→04/00
TROOPER Open Off-Road Vehicle		04/00→08/04
TROOPER Open Off-Road Vehicle (UB)		08/91→07/98

JAGUAR

XJ		07/68→02/93
XJ (X300_)		09/94→12/98

JEEP

COMPASS (MK49)		08/06→
GRAND CHEROKEE I (ZJ)		09/91→04/99

KIA

AVELLA		11/95→12/01
AVELLA Hatchback		11/95→12/01
MAGENTIS (GD)		05/01→
SORENTO II (XM)		11/09→
SOUL (AM)		01/09→
SOUL II (PS)		02/14→
SPORTAGE (K00)		04/94→08/04

LADA

110		01/95→12/12
111		01/95→
112		01/95→12/11
LARGUS Box		03/12→
LARGUS Estate		03/12→
NADESCHDA (2120)		12/97→12/06
NIVA II (2123)		09/02→
OKA (1111)		02/88→12/08
PRIORA Estate (2171)		10/09→
PRIORA Hatchback (2172)		12/08→
PRIORA Saloon (2170)		12/08→
SAMARA (2108, 2109, 2115)		01/86→12/13
SAMARA FORMA (21099)		09/87→12/12
SAMARA Hatchback (2113, 2114, 2115)		03/97→12/13

LANCIA

THEMA (834_)		11/84→07/94
THEMA SW (834_)		03/87→07/94
THESIS (841_)		07/02→07/09
VOYAGER MPV (RT_)		09/11→12/14
ZETA (22_)		05/95→09/02

LDV

400 Box		11/86→12/96
400 Bus		04/89→03/96
CONVOY Box		04/96→04/09
CONVOY Bus		04/96→04/09
CONVOY Platform/Chassis		04/96→04/09
SHERPA Bus (FR)		01/83→09/88

LEXUS

GS (JZS160_, UZS161_, UZS160_)		08/97→12/04
LS (UCF10)		09/89→12/95
SC (UZZ40_)		01/01→07/10

LOTUS

ELISE ('95)		08/95→01/01

MASERATI

BITURBO (70, 77)		06/84→12/94
BITURBO Coupe		12/81→06/93
BITURBO Spider		07/85→12/94
GHIBLI II		04/92→12/97
QUATTROPORTE IV		03/94→05/01

MAZDA

6 Hatchback (GG)		08/02→12/08
121 II (DB)		11/90→05/97
323 P V (BA)		10/96→09/98
626 IV (GE)		08/91→08/98
626 IV Hatchback (GE)		08/91→08/98
DEMIO (DW)		01/96→07/03

...A51

MAZDA

MPV I (LV)		09/88→09/99
MX-6 (GD)		10/87→01/97
MX-6 (GE)		07/91→02/97
RX 7 II (FC)		11/85→12/91
RX 7 II Convertible		01/88→01/92
RX 7 III (FD)		07/92→08/02
RX 8 (SE17)		10/03→06/12
XEDOS 6 (CA)		01/92→10/99
XEDOS 9 (TA)		07/93→09/02

MERCEDES-BENZ

190 (W201)		10/82→08/93
COUPE (C123)		03/77→12/85
KOMBI Estate (S123)		09/77→12/86
Saloon (W123)		01/76→12/85
T1 Box (601)		05/77→02/96
T1 Box (602)		10/82→02/96
T1 Bus (601)		05/77→02/96
T1 Platform/Chassis (601)		01/77→02/96
T1 Platform/Chassis (602)		01/77→02/96

MG

MAESTRO		03/83→09/90
MGF (RD)		03/95→03/02
MG TF		03/02→12/09
MG ZS		07/01→04/05
MG ZS Hatchback		07/01→10/05
MONTEGO		04/84→09/90

MITSUBISHI

3000 GT Coupe (Z16A)		06/89→08/00
CANTER Platform/Chassis (FB_, FE_, FG_)		08/01→
CANTER Platform/Chassis (FB6_, FE5_, FE6_)		10/93→10/02
CARISMA (DA_)		07/95→06/06
CARISMA Saloon (DA_)		09/96→06/06
COLT IV (CA_A)		03/92→04/96
COLT V (CJ_, CP_)		09/95→09/03
GALANT IV (E3_A)		11/88→12/92
GALANT V (E5_A, E7_A, E8_A)		11/92→10/96
LANCER V (CB/D_A)		09/91→12/96
LANCER V Station Wagon (CB_W, CD_W)		09/92→10/03
PAJERO / SHOGUN (III) (V7_W, V6_W)		01/99→01/07
PAJERO / SHOGUN (IV) (V8_W, V9_W)		11/06→
PAJERO / SHOGUN Box (IV) (V90, V80)		11/06→
PAJERO / SHOGUN CLASSIC (V2_W)		07/01→
PAJERO / SHOGUN Soft Top (III)		04/00→12/06
PAJERO / SHOGUN SPORT I (K90)		07/96→
SIGMA (F2_A, F1_A)		10/90→07/96
SIGMA Station Wagon (F0_W)		06/92→10/96

NISSAN

100 NX (B13)		03/90→01/96
200 SX (S13)		07/88→12/95
200 SX (S14)		10/93→12/99
240 SX		08/88→02/01
350 Z Coupe (Z33)		09/02→11/09
350 Z Roadster (Z33)		10/03→12/09
ALMERA TINO (V10)		12/98→02/06
BLUEBIRD Hatchback (T72, T12)		12/85→11/92
CABSTAR Platform/Chassis (F22, H40)		01/82→09/93
CABSTAR Platform/Chassis (F24_)		09/06→12/13
CUBE (Z11)		01/03→09/05
CUBE (Z12)		09/07→
KUBISTAR (X76)		08/03→10/09
KUBISTAR Box (X80)		08/03→
MAXIMA III (J30)		10/88→02/95
MICRA II (K11)		01/92→12/07
PATHFINDER I (WD21)		07/86→10/95
PATROL GR V Wagon (Y61)		06/97→
PATROL V Platform/Chassis		05/98→
PRIMERA (P11)		06/96→12/01
PRIMERA Hatchback (P11)		06/96→07/02

...A51

NISSAN

PRIMERA Traveller (WP11)		06/96→01/02
SKYLINE (R33)		07/93→12/98
SKYLINE (R34)		01/98→08/02
SKYLINE Coupe (R34)		01/98→02/08
SKYLINE Coupe (V35)		01/01→12/07
SUNNY II (N13)		06/86→10/91
SUNNY II Coupe (B12)		06/86→06/91
SUNNY II Hatchback (N13)		06/86→09/91
SUNNY II Traveller (B12)		01/86→06/91
SUNNY III Hatchback (N14)		10/90→07/95
SUNNY III Liftback (N14)		10/90→10/95
TERRANO II (R20)		10/92→09/07
TERRANO II Van (R20)		06/98→09/07
TRADE Box Body / Estate		01/96→12/00
TRADE Bus		06/96→10/01
TRADE I Platform/Chassis		11/86→06/94
TRADE I Van		11/86→03/93
TRADE II Platform/Chassis		04/93→12/98
TRADE II Van		04/93→10/98
TRADE III Platform/Chassis		06/96→09/04
TRADE III Van		06/96→10/01

OPEL

AGILA (A) (H00)		09/00→12/07
ARENA Box		01/97→12/01
ARENA Box (TB, TF)		03/98→08/01
ARENA Bus		01/97→12/01
ARENA Combi (THB)		03/98→08/01
ASCONA C Hatchback (84_, 89_)		09/81→08/88
ASTRA G Box (F70)		01/99→04/05
ASTRA G CLASSIC Caravan (F35)		03/04→07/09
ASTRA G CLASSIC Saloon (T98)		03/04→07/09
ASTRA G Convertible (F67)		03/01→10/05
ASTRA G Coupe (F07_)		03/00→05/05
ASTRA G Estate (F35_)		02/98→12/09
ASTRA G Hatchback (F48_, F08_)		02/98→12/09
ASTRA G Saloon (F69_)		09/98→12/09
COMBO Box Body / Estate		10/01→
COMBO Tour		10/01→
CORSA C (F08, F68)		09/00→12/09
CORSA C Box (F08, W5L)		09/00→
KADETT D (31_-34_, 41_-44_)		08/79→08/84
MONTEREY A (UBS_)		09/91→07/98
MONTEREY B		07/98→08/99
MONZA A (22_)		02/78→08/86
TIGRA (95_)		07/94→12/00
TIGRA TwinTop		06/04→

PEUGEOT

106 I (1A, 1C)		08/91→04/96
106 II (1)		04/96→05/05
106 Van (1_)		08/91→03/01
306 (7B, N3, N5)		04/93→10/03
306 Box Body / Hatchback		04/93→08/01
306 Break (7E, N3, N5)		06/94→04/02
306 Convertible (7D, N3, N5)		01/94→04/02
306 Hatchback (7A, 7C, N3, N5)		01/93→10/03
306 Van (N_, 7_)		07/93→08/02
309 II (3C, 3A)		07/89→12/93
406 Coupe (8C)		03/97→02/05
806 (221)		06/94→08/02
EXPERT (224)		10/95→12/06
EXPERT Box (222)		07/95→12/06
EXPERT Box (VF3A_, VF3U_, VF3X_)		01/07→
EXPERT Platform/Chassis		01/07→
EXPERT Platform/Chassis (223)		12/95→12/06
EXPERT Tepee (VF3V_)		01/07→
J5 Box (280L)		09/81→09/90
J5 Box (290L)		09/90→03/94
J5 Bus (280P)		09/81→09/90
J5 Bus (290P)		09/90→02/94
J5 Platform/Chassis (280L)		09/81→09/90
J5 Platform/Chassis (290L)		09/90→02/94

PORSCHE

924		11/75→08/89
928		09/77→11/95

...A51

PORSCHE

944		06/81→07/91
968		06/91→11/95

PROTON

IMPIAN		09/01→
JUMBUCK Pickup		02/02→
PERSONA 300 / SATRIA (C9_M)		03/96→07/04
PERSONA 400 / WIRA (C9_S)		01/94→02/08
PERSONA 400 / WIRA Hatchback (C9_C, C9_S)		01/94→02/08
SATRIA / COMPACT (C9_M)		04/96→05/06
WIRA		05/95→
WIRA Hatchback		01/00→

RENAULT

19 I (B/C53_)		01/88→09/94
19 I Box (S53_)		01/88→12/92
19 I Cabriolet (D53_)		07/91→04/92
19 I Chamade (L53_)		01/88→12/92
19 II (B/C53_)		01/91→06/01
19 II Box (S53_)		03/92→12/95
19 II Cabriolet (D53_, 853_)		04/92→06/01
19 II Chamade (L53_)		04/92→08/03
21 (B48_)		07/89→06/94
21 Box (S48_)		06/86→04/95
21 Estate (K48_)		03/86→07/97
21 Saloon (L48_)		03/86→07/97
CLIO I (B/C57_, 5/357_)		05/90→09/98
CLIO I Box (S57_)		01/91→09/98
DUSTER (HS_)		01/11→
KANGOO (KC0/1_)		08/97→
KANGOO Express (FC0/1_)		08/97→
LAGUNA II (BG0/1_)		03/01→
LAGUNA II Grandtour (KG0/1_)		03/01→
LOGAN EXPRESS (US_)		04/07→
LOGAN I (LS_)		09/04→
LOGAN I Estate (KS_)		04/07→
LOGAN II		09/12→
LOGAN II Estate (K8_)		12/13→
MEGANE I (BA0/1_)		08/95→12/04
MEGANE I Cabriolet (EA0/1_)		10/96→08/03
MEGANE I Classic (LA0/1_)		09/96→08/08
MEGANE I Coach (DA0/1_)		03/96→08/03
MEGANE I Grandtour (KA0/1_)		03/99→08/03
SANDERO/STEPWAY I		11/07→
SANDERO/STEPWAY II		11/13→
TRAFIC Box (TXX)		03/89→12/01
TRAFIC Bus (TXW)		03/89→03/01
TRAFIC Platform/Chassis (PXX)		03/89→03/01

ROVER

45 (RT)		02/00→05/05
45 Saloon (RT)		02/00→05/05
200 Coupe (XW)		10/92→06/99
400 (RT)		05/95→03/00
400 Hatchback (RT)		05/95→03/00
600 (RH)		08/93→10/00
800 (XS)		10/86→02/99
800 Coupe		08/92→02/99
800 Hatchback (XS)		10/86→02/99
CITYROVER		09/03→12/05
COUPE		03/96→11/99
MAESTRO		09/90→01/95
MONTEGO		10/88→10/95
MONTEGO Estate (XE)		10/84→12/93

SAAB

9-3 (YS3D)		02/98→08/03
900 II		07/93→04/99
9000		04/85→12/98
9000 Hatchback		09/84→12/98

SEAT

IBIZA I (021A)		06/84→12/93
TOLEDO I (1L)		01/91→10/99

SKODA

FAVORIT (781)		05/89→09/94
FAVORIT Forman (785)		06/88→06/95
FAVORIT Pickup (787)		06/92→06/97
FELICIA I (6U1)		10/94→03/98
FELICIA I Estate (6U5)		07/95→03/98

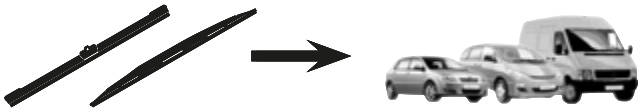

...A51

SKODA
FELICIA I Fun (797) 10/95→04/02
FELICIA II (6U1) 01/98→06/01
FELICIA II Estate (6U5) 01/98→06/01

SMART
ROADSTER (452) 04/03→11/05
ROADSTER Coupe (452) 04/03→11/05

SSANGYONG
ACTYON I 11/05→
MUSSO (FJ) 01/93→09/07
MUSSO SPORTS 08/04→
REXTON (GAB_) 04/02→
REXTON W 07/12→

SUBARU
JUSTY IV 01/07→
LEGACY III (BE, BH) 10/98→08/03
LEGACY III Estate (BE, BH) 10/98→08/03
OUTBACK (BE, BH) 10/98→08/03
SVX (CX) 09/92→12/97
TRIBECA (B9) 01/05→

SUZUKI
BALENO (EG) 03/95→12/09
BALENO Estate (EG) 04/95→04/05
BALENO Hatchback (EG) 03/95→05/02
SWIFT Convertible (SF413) 09/91→10/96
SWIFT II Hatchback (EA, MA) 03/89→12/05
SWIFT II Saloon (AH, AJ) 03/89→05/01
SWIFT V (AZ) 01/17→
WAGON R 07/03→05/08
WAGON R+ (EM) 10/97→10/00
WAGON R+ (MM) 05/00→

TOYOTA
AVENSIS Liftback (_T22_, ST22_) 09/97→02/03
CARINA E (_T19_) 04/92→09/97
CELICA (ST20_, AT20_) 09/93→11/99
CELICA (ZZT23_) 08/99→03/06
COROLLA (_E10_) 06/91→11/99
COROLLA (_E11_) 04/97→06/02
COROLLA Compact (_E10_) 05/92→11/99
COROLLA Compact (_E11_) 04/97→01/02
COROLLA Liftback (_E10_) 05/92→04/97
COROLLA Liftback (_E11_) 04/97→01/02
COROLLA Wagon (__E11_) 04/97→10/01
COROLLA Wagon (_E10_) 05/92→04/97
DYNA 250 Platform/Chassis 06/95→07/01
DYNA 300 Platform/Chassis 06/95→12/02
DYNA 400 Platform/Chassis (XZU_) 10/00→12/06
DYNA Platform/Chassis (KD_, LY_, TRY2_, KDY2_, XZU4_, XZU3_, 08/01→
HILUX Closed Off-Road Vehicle (RZN1_, LN1_) 08/95→08/05
MR 2 II (SW2_) 12/89→11/99
MR 2 III (ZZW3_) 10/99→06/07
PASEO Convertible (EL54) 10/96→01/98
PASEO Coupe (EL54) 08/95→12/99
PROACE Box Body / Estate 06/13→03/16
RAV 4 I (SXA1_) 01/94→09/00
RAV 4 I Cabrio (SXA1_) 12/97→06/00
STARLET (EP91) 01/96→10/99
SUPRA (JZA80) 05/93→07/02

VOLVO
440 K (445) 08/88→12/96
740 (744) 04/83→12/92
740 Kombi (745) 08/84→12/92
760 (704, 764) 08/81→07/92
780 04/86→11/90
940 (944) 08/90→03/95
940 II (944) 08/94→12/98
940 II Estate (945) 08/94→10/98
940 Kombi (945) 08/90→10/95
S40 I (VS) 07/95→06/04
V40 Estate (VW) 07/95→06/04

VW
LT 28-35 I Box (281-363) 04/75→06/96

...A51

VW
LT 28-35 I Bus (281-363) 04/75→06/96
LT 28-35 I Platform/Chassis (281-363) 04/75→06/96
LT 40-55 I Box (291-512) 04/75→06/96
LT 40-55 I Platform/Chassis (293-909) 04/75→06/96

A51+AK1

MITSUBISHI
3000 GT Coupe (Z16A) 06/89→08/00
COLT III (C5_A) 10/86→05/92
ECLIPSE I (D2_A) 12/89→12/95
LANCER III Station Wagon (C1_V, C3_V) 09/85→08/92
LANCER IV (C6_A, C7_A) 04/88→05/94
LANCER IV Saloon (C6_A) 04/88→09/92

PORSCHE
944 06/81→07/91

PROTON
SALOON MPI (C2_S) 01/89→11/96

ROVER
MAESTRO 09/90→01/95

TOYOTA
CAMRY (_CV1_, _XV1_, _V1_) 06/91→09/97
CAMRY (_V2_) 10/86→02/93
CAMRY Station Wagon (_V2_) 11/86→02/93
CARINA II (_T17_) 12/87→06/92
CARINA II Saloon (_T17_) 12/87→06/92
CARINA II Station Wagon (_T17_, CT17_, ST17_) 12/87→04/92
CELICA (AT16_, ST16_) 08/85→08/89
CELICA Convertible (AT18_, ST18_) 10/89→11/93
CELICA Convertible (ST16_, AT16_) 08/85→08/89
CELICA Coupe (AT18_, ST18_) 09/89→12/94
CELICA Coupe (ST16_, AT16_) 09/85→08/89
CELICA Hatchback (ST16_, AT16_) 08/85→12/89
COROLLA (_E9_) 05/87→09/94
COROLLA Compact (_E9_) 05/87→10/95
COROLLA Liftback (_E9_) 07/87→10/95
COROLLA Station Wagon (_E9_) 05/87→10/95
MR 2 II (SW2_) 12/89→11/99
STARLET (_P8_) 12/89→03/96
SUPRA (JZA70_, GA70_, MA70) 01/86→05/93

A53

ALFA ROMEO
155 (167_) 01/92→12/97
156 (932_) 09/97→09/05
156 Sportwagon (932_) 01/00→05/06
164 (164_) 01/87→09/98
166 (936_) 09/98→06/07

ALPINA
B3 (E36) 04/93→05/99
B3 Convertible (E36) 04/93→03/99
B3 Coupe (E36) 04/96→03/99
B3 Estate (E36) 04/93→03/99
B6 (E36) 03/92→07/93
B8 (E36) 01/95→03/98
B8 Convertible (E36) 01/95→03/98
B8 Coupe (E36) 01/95→03/98
B8 Estate (E36) 01/95→03/98
ROADSTER (Z8) 06/02→10/03
ROADSTER S (Z4) 07/03→12/05

AUDI
80 (8C, B4) 09/91→12/94
80 (89, 89Q, 8A, B3) 06/86→10/91
80 Avant (8C, B4) 09/91→01/96
90 (81, 85, B2) 08/84→03/87
90 (89, 89Q, 8A, B3) 04/87→09/91
100 (44, 44Q, C3) 08/82→07/91
100 Avant (44, 44Q, C3) 08/82→11/90
200 (44, 44Q) 06/83→12/91
200 Avant (44, 44Q) 09/83→12/91
A3 (8L1) 09/96→06/03

...A53

AUDI
A4 (8D2, B5) 11/94→09/01
A4 Avant (8D5, B5) 11/94→09/01
COUPE (81, 85) 07/80→10/88
COUPE (89, 8B) 10/88→12/96
QUATTRO (85) 07/80→07/91
TT (8N3) 10/98→06/06
TT Roadster (8N9) 10/99→06/06
V8 (44_, 4C_) 10/88→02/94

BMW
3 (E36) 09/90→02/98
3 Compact (E36) 03/94→08/00
3 Convertible (E36) 03/93→04/99
3 Coupe (E36) 03/92→04/99
3 Touring (E36) 01/95→10/99
Z4 (E85) 02/03→12/09
Z4 Coupe (E86) 03/06→01/09
Z8 (E52) 06/00→06/03

CHEVROLET
CORVETTE (C6) 09/04→
EPICA (KL1_) 01/05→
LACETTI (J200) 03/03→
LACETTI Estate (J200) 03/05→
LACETTI Saloon 03/03→03/13
SPARK ('00) 09/00→12/04

CHRYSLER
NEON (PL) 05/94→09/00
PT CRUISER (PT_) 06/00→12/10
PT CRUISER Convertible 06/00→12/10

CITROËN
C4 AIRCROSS 08/10→

DAEWOO
LEGANZA (KLAV) 03/97→04/04
MATIZ (KLYA) 09/98→

DAIHATSU
CHARADE (L2_) 03/03→
CUORE VI (L251, L250_, L260_) 03/03→
CUORE VII (L275_, L285_, L276_) 12/06→
TERIOS (J2_) 11/05→
YRV (M2) 02/01→

DODGE
NEON 05/94→08/99

FIAT
COUPE (175_) 11/93→08/00

FORD
MAVERICK (UDS, UNS) 02/93→04/98
MONDEO I (GBP) 02/93→08/96
MONDEO I Estate (BNP) 01/93→08/96
MONDEO I Saloon (GBP) 02/93→08/96
MONDEO II (BAP) 08/96→09/00
MONDEO II Estate (BNP) 08/96→09/00
MONDEO II Saloon (BFP) 08/96→09/00

HONDA
CIVIC VII Coupe (EM2) 02/01→12/05
CR-V II (RD_) 09/01→12/06
ODYSSEY (RA_) 10/95→10/00
ODYSSEY (RB_) 09/98→

ISUZU
KB ('02) 07/02→

JAGUAR
F-TYPE Convertible (QQ6_) 10/12→
F-TYPE Coupe (QQ6_) 10/13→
XJ (NAW_, NBW_) 09/96→05/03
XJ (XJ40_) 10/86→11/94
XK 8 Convertible (QDV_) 03/96→12/06
XK 8 Coupe (QEV_) 03/96→12/06
XK Convertible (QQ6_) 03/06→07/14
XK Coupe (QQ6_) 03/06→07/14

JEEP
GRAND CHEROKEE II (WJ, WG) 09/98→09/05
GRAND CHEROKEE III (WH, WK) 10/04→10/11
GRAND CHEROKEE IV (WK, WK2) 06/10→
PATRIOT (MK74) 02/07→

KIA
CLARUS (K9A) 05/96→11/01

...A53

KIA
CLARUS Estate (GC) 05/98→
K2500 (SD) 06/01→
K2700 01/04→
K2700 (SD) 10/99→
K2900 01/08→
MENTOR 01/95→10/97
MENTOR Saloon 01/92→09/01
PREGIO Box (TB) 10/97→
PREGIO Bus 08/95→09/04
RIO Estate (DC) 07/00→02/05
RIO Saloon (DC_) 07/00→02/05
SHUMA (FB) 09/96→12/01
SHUMA II (FB) 05/01→08/04
SHUMA II Saloon (FB) 05/01→05/04
SHUMA Saloon (FB) 03/96→10/01

LANCIA
DEDRA (835_) 01/89→07/99
DEDRA SW (835_) 07/94→07/99
DELTA II (836_) 06/93→09/99
KAPPA (838_) 08/94→10/01
KAPPA Coupe (838_) 07/96→03/01
KAPPA SW (838_) 07/96→10/01
LYBRA (839_) 07/99→10/05
LYBRA SW (839_) 07/99→10/05

LAND ROVER
FREELANDER (LN_) 02/98→10/06
FREELANDER Soft Top (LN_) 02/98→10/06

LEXUS
ES (VCV10_, VZV21_) 09/89→12/97
GS (JZS147_) 01/93→08/97
LX (UZJ100) 09/97→03/08
RX (MCU15) 07/00→05/03

MAZDA
323 C IV (BG) 06/89→09/00
323 C V (BA) 08/94→01/01
323 F IV (BG) 04/87→10/94
323 F V (BA) 07/94→09/98
323 F VI (BJ) 09/98→05/04
323 P V (BA) 10/96→09/98
323 S IV (BG) 06/89→05/95
323 S V (BA) 09/92→12/03
323 S VI (BJ) 05/98→05/04
626 IV (GE) 08/91→08/98
626 IV Hatchback (GE) 08/91→08/98
626 V (GF) 05/97→12/02
626 V Hatchback (GF) 05/97→12/02
626 V Station Wagon (GW) 01/98→12/02
MX-3 (EC) 07/91→09/98
XEDOS 6 (CA) 01/92→10/99
XEDOS 9 (TA) 07/93→09/02

MITSUBISHI
CARISMA (DA_) 07/95→06/06
CARISMA Saloon (DA_) 09/96→06/06
COLT V (CJ_, CP_) 09/95→09/03
L 200 (KB_T, KA_T) 01/04→12/15
L 200 / TRITON (KJ_, KK_, KL_) 11/14→
LANCER VI (CJ-CP_) 09/95→08/03
MIRAGE Hatchback (CJ_A) 09/95→07/03
MIRAGE Saloon (CK_A) 09/95→07/03
SPACE STAR MPV (DG_A) 06/98→12/04

NISSAN
100 NX (B13) 03/90→01/96
200 SX (S14) 10/93→12/99
300 ZX (Z32) 09/89→12/00
ALMERA I (N15) 07/95→07/00
ALMERA I Hatchback (N15) 07/95→01/01
ALMERA II (N16) 06/00→
ALMERA II Hatchback (N16) 01/00→
MAXIMA III (J30) 10/88→02/95
MAXIMA / MAXIMA QX IV (A32) 03/94→08/00
MAXIMA / MAXIMA QX IV Station Wagon (A32) 10/97→12/00
MICRA C+C III (K12) 08/05→
MICRA III (K12) 03/02→06/10
MICRA IV (K13) 05/10→

...A53

NISSAN

PATHFINDER II (R50)		09/95→07/05
PRIMASTAR Box (X83)		09/02→
PRIMASTAR Bus (X83)		03/01→
PRIMASTAR Platform/Chassis		07/02→08/06
PRIMERA (P10)		06/90→06/96
PRIMERA (P11)		06/96→12/01
PRIMERA Hatchback (P10)		06/90→06/96
PRIMERA Hatchback (P11)		06/96→07/02
PRIMERA Traveller (W10)		07/90→03/98
PRIMERA Traveller (WP11)		06/96→01/02
SUNNY III (N14)		05/90→12/96
SUNNY III Box (Y10)		11/90→03/00
SUNNY III Hatchback (N14)		10/90→07/95
SUNNY III Liftback (N14)		10/90→10/95
SUNNY III Traveller (Y10)		11/90→03/00
TERRANO II (R20)		10/92→09/07
TERRANO II Van (R20)		06/98→09/07

OPEL

VIVARO Box (F7)		08/01→
VIVARO Combi (J7)		08/01→
VIVARO Platform/Chassis (E7)		08/01→

PEUGEOT

4008		05/12→

PORSCHE

911 (996)		09/97→08/05
911 (997)		07/04→12/12
911 Convertible (996)		02/98→08/05
911 Convertible (997)		04/05→12/12
911 Targa (996)		12/01→08/05
911 Targa (997)		07/06→12/12
BOXSTER (986)		09/96→12/04
BOXSTER (987)		11/04→12/11
BOXSTER Spyder (987)		09/07→12/11
CAYMAN (987)		11/05→12/13

RENAULT

CLIO II (BB0/1/2_, CB0/1/2_)		09/98→
CLIO II Box (SB0/1/2_)		09/98→
THALIA I (LB0/1/2_)		02/98→
TRAFIC II Box (FL)		03/01→
TRAFIC II Bus (JL)		03/01→
TRAFIC II Platform/Chassis (EL)		03/01→

SAAB

9-3 (YS3D)		02/98→08/03
9-3 Cabriolet (YS3D)		02/98→08/03
900 II		07/93→04/99
900 II Convertible		09/93→04/99
900 II Coupe		12/93→04/99
9000		04/85→12/98
9000 Hatchback		09/84→12/98

SEAT

AROSA (6H)		05/97→06/04
CORDOBA (6K1, 6K2)		02/93→10/02
CORDOBA (6K2)		06/99→10/02
CORDOBA (6L2)		09/02→11/09
CORDOBA Vario (6K5)		06/99→12/02
CORDOBA Vario (6K5)		08/96→12/02
IBIZA II (6K1)		03/93→02/02
IBIZA III (6K1)		08/99→02/02
IBIZA IV (6L1)		02/02→11/09
INCA (6K9)		11/95→06/03
LEON (1M1)		11/99→06/06
TOLEDO II (1M2)		10/98→05/06

SKODA

FABIA (6Y2)		08/99→03/08
FABIA Combi (6Y5)		04/00→12/07
FABIA Praktik		07/01→12/07
FABIA Saloon (6Y3)		10/99→12/07
OCTAVIA (1U2)		09/96→12/10
OCTAVIA Combi (1U5)		07/98→12/10
SUPERB (3U4)		12/01→03/08

SMART

CABRIO (450)		03/00→01/04
CITY-COUPE (450)		07/98→01/04
CROSSBLADE (450)		06/02→12/03
FORTWO Cabrio (450)		01/04→01/07

...A53

SMART

FORTWO Coupe (450)		01/04→02/07

SSANGYONG

ACTYON I		11/05→
ACTYON II		08/12→
ACTYON SPORTS I (QJ)		11/05→
ACTYON SPORTS II		10/12→

SUBARU

FORESTER (SF)		03/97→09/02
FORESTER (SG)		06/02→10/12
IMPREZA Coupe (GFC)		01/93→12/00
IMPREZA Estate		07/07→12/12
IMPREZA Estate (GF)		08/92→12/00
IMPREZA Saloon (GC)		08/92→09/01
JUSTY II (JMA, MS)		10/95→11/03
LEGACY I (BC)		01/89→08/94
LEGACY I Estate (BC, BJF)		01/89→08/94
LEGACY II (BD, BG)		03/94→10/99
LEGACY II Estate (BD, BG)		02/94→12/99
LEGACY OUTBACK (BG)		01/96→12/99

SUZUKI

BALENO		02/16→
CELERIO		02/14→
SPLASH		01/08→
SWIFT III (MZ, EZ)		02/05→

TOYOTA

AVENSIS (_T22_, ZZT22_)		09/97→02/03
AVENSIS Liftback (_T22_, ST22_)		09/97→02/03
AVENSIS Station Wagon (_T22_, ZZT22_)		09/97→02/03
CAMRY (_CV2_, _XV2_)		08/96→11/01
CAMRY Station Wagon (_XV1_, _CV1_, _V10)		06/91→08/97
CARINA E (_T19_)		04/92→09/97
CARINA E Saloon (_T19_)		04/92→09/97
CARINA E Sportswagon (_T19_)		02/92→09/97
CELICA (ST20_, AT20_)		09/93→11/99
CELICA Convertible (AT20_, ST20_)		11/93→08/99
HIACE / COMMUTER V (TRH2_, KDH2_)		08/04→
HIACE III Box (YH7_, LH6_, LH7_, LH5_, YH5_, YH6_)		08/87→07/06
HIACE III Platform/Chassis (YH8_, LH8_)		08/85→04/95
HIACE III Wagon (LH1_, RZH1_)		08/87→12/04
HIACE IV Box (LXH1_, RZH1_, LH1_)		08/95→
HIACE IV Bus (LH1_)		08/95→
HIACE IV Platform/Chassis (LXH1_, RCH1_, KLH1_)		08/95→
HIACE V Box (TRH2_, KDH2_)		08/04→
HILUX Closed Off-Road Vehicle (RZN1_, LN1_)		08/95→08/05
HILUX III Pickup (KUN_, TGN_, LAN_, GGN_)		08/04→
LAND CRUISER (LJ12_, KZJ12_, TRJ12_, KDJ12_, GRJ12_)		09/02→08/10
SUPRA (JZA80)		05/93→07/02
YARIS (SCP1_, NLP1_, NCP1_)		01/99→12/05

VOLVO

440 K (445)		08/88→12/96
460 L (464)		09/88→12/96
480 E		04/86→07/96
760 (704, 764)		08/81→07/92
760 Kombi (704, 765)		01/82→07/92
850 (LS)		06/91→10/97
850 Estate (LW)		04/92→10/97
960 (964)		08/90→07/94
960 II (964)		07/94→12/96
960 II Estate (965)		07/94→12/96
C70 I Convertible		03/98→10/05
C70 I Coupe		03/97→09/02
S40 I (VS)		07/95→06/04
S70 (LS)		11/96→11/00
S90		11/96→12/98
V40 Estate (VW)		07/95→06/04
V70 I (LV)		12/95→12/00

...A53

VOLVO

V90 Estate		11/96→12/98

VW

BORA (1J2)		10/98→09/05
BORA Estate (1J6)		05/99→05/05
CADDY II Box (9K9A)		11/95→01/04
CADDY II Estate (9K9B)		11/95→01/04
CADDY II Pickup (9U7)		06/96→12/00
FOX (5Z1, 5Z3)		10/03→
GOLF III (1H1)		08/91→07/98
GOLF III Cabriolet (1E7)		07/93→05/98
GOLF III Van (1H1)		08/91→12/97
GOLF III Variant (1H5)		07/93→04/99
GOLF IV (1J1)		08/97→06/05
GOLF IV Cabriolet (1E7)		06/98→06/02
GOLF IV Van (1J1)		05/00→05/04
GOLF IV Variant (1J5)		05/99→06/06
LUPO (6X1, 6E1)		09/98→07/05
NEW BEETLE (9C1, 1C1)		01/98→09/10
NEW BEETLE Convertible (1Y7)		09/02→10/10
PASSAT (3A2, 35I)		02/88→12/97
PASSAT (3B2)		08/96→12/01
PASSAT (3B3)		11/00→05/05
PASSAT Estate (3B5)		05/97→12/01
PASSAT Variant (3A5, 35I)		02/88→06/97
PASSAT Variant (3B6)		10/00→08/05
POLO (9N_)		10/01→01/12
POLO CLASSIC (6KV2)		11/95→07/06
POLO Variant (6KV5)		04/97→09/01
POLO VIVO Hatchback		02/10→
POLO VIVO Saloon		02/10→
TRANSPORTER IV Box (70XA)		07/90→04/03
TRANSPORTER IV Bus (70XB, 70XC, 7DB, 7DW, 7DK)		09/90→06/03
TRANSPORTER IV Platform/Chassis (70XD)		07/90→04/03
VENTO (1H2)		11/91→09/98

A53+AK1

MITSUBISHI

3000 GT Coupe (Z16A)		06/89→08/00

A55

ALFA ROMEO

8C (920_)		01/07→10/09
8C SPIDER (920_)		01/08→10/10
145 (930_)		07/94→01/01
146 (930_)		12/94→01/01
147 (937_)		11/00→12/10
156 (932_)		09/97→09/05
156 Sportwagon (932_)		01/00→05/06
GT (937_)		11/03→09/10
SPIDER (916_)		09/94→04/05

AUDI

100 (4A, C4)		12/90→07/94
100 Avant (4A, C4)		12/90→07/94
A6 (4A, C4)		06/94→10/97
A6 (4B2, C5)		01/97→01/05
A6 Avant (4A, C4)		06/94→12/97
A6 Avant (4B5, C5)		11/97→01/05
A8 (4D2, 4D8)		03/94→12/02
ALLROAD (4BH, C5)		05/00→08/05
CABRIOLET (8G7, B4)		05/91→08/00
COUPE (89, 8B)		10/88→12/96
V8 (44_, 4C_)		10/88→02/94

BENTLEY

AZURE		09/95→06/06
CONTINENTAL		10/91→12/02

BMW

X3 (E83)		01/03→12/11
X5 (E53)		05/00→02/07
Z4 ROADSTER (E89)		05/09→

CHEVROLET

ALERO		03/99→09/04
AVEO Hatchback (T250, T255)		06/06→
AVEO Saloon (T200)		01/03→12/08
AVEO Saloon (T250, T255)		03/05→

...A55

CHEVROLET

CORVETTE ('97)		01/97→12/04
CORVETTE Convertible		09/97→09/04
EVANDA		03/05→
KALOS		03/05→
KALOS Saloon		03/05→
MATIZ (M200, M250)		03/05→
NUBIRA Estate		01/05→12/11
NUBIRA Saloon		01/05→12/11
SPARK ('05)		05/05→
TRAILBLAZER (KC_)		09/01→12/09

CHRYSLER

300 C		09/10→
300 C (LX)		09/04→
300 C Touring (LX)		09/04→12/10
300 M (LR)		07/98→09/04
CROSSFIRE		07/03→12/08
CROSSFIRE Roadster		05/04→12/08
NEON II		08/99→12/06
SEBRING (JR)		09/00→06/07
SEBRING (JS)		09/06→12/10
SEBRING Convertible (JR)		04/01→06/07
SEBRING Convertible (JS)		05/07→12/10
STRATUS (JA)		09/94→04/01
STRATUS Convertible (JX)		04/96→04/01
VOYAGER II (ES)		08/90→09/95

CITROËN

AX (ZA-_)		07/86→12/98
BERLINGO (MF)		07/96→12/11
BERLINGO Box (M_)		07/96→12/11
C3 Pluriel (HB_)		05/03→
RELAY Bus (230P)		02/94→04/02
RELAY Bus (244, Z_)		04/02→
RELAY Platform/Chassis (230)		03/94→04/02
RELAY Platform/Chassis (244)		02/02→
RELAY Van/Box (230L)		02/94→04/02
RELAY Van/Box (244)		04/02→
XM (Y3)		05/89→10/94
XM (Y4)		05/94→10/00
XM Break (Y3)		05/89→07/94
XM Break (Y4)		05/94→10/00
XSARA (N1)		04/97→12/05
XSARA Box		05/98→08/05
XSARA Break (N2)		10/97→03/10
XSARA Coupe (N0)		01/98→04/05
ZX (N2)		03/91→07/99
ZX Break (N2)		10/93→07/99

DACIA

DOKKER		11/12→
DOKKER Express		12/12→
LODGY		03/12→
LOGAN II		10/12→
LOGAN MCV II		02/13→
SANDERO II		10/12→

DAEWOO

EVANDA (KLAL)		08/02→
KALOS (KLAS)		09/02→
KALOS Saloon (KLAS)		11/02→12/04
LACETTI Hatchback (KLAN)		02/02→
LUBLIN II Box		04/97→
LUBLIN II Bus		04/97→
LUBLIN II Platform/Chassis		04/97→
NUBIRA Saloon (KLAN)		07/03→
NUBIRA Wagon (KLAN)		07/03→

DODGE

AVENGER		06/07→
NEON II		08/99→
STRATUS		09/94→04/01

FIAT

DOBLO Cargo (223_)		11/00→
DOBLO MPV (119_, 223_)		03/01→
DUCATO Box (230_)		03/94→05/05
DUCATO Box (244_)		04/02→
DUCATO Bus (230_)		03/94→04/02
DUCATO Bus (244_)		04/02→
DUCATO Platform/Chassis (230_)		03/94→04/02

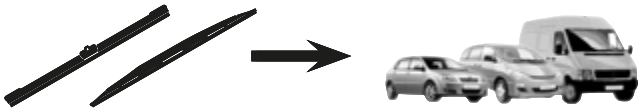

...A55

FIAT

DUCATO Platform/Chassis (244_)		04/02→
FULLBACK Pickup (KT_)		01/16→
IDEA (350_)		12/03→
MULTIPLA (186_)		04/99→06/10
PANDA (169_)		09/03→
PANDA Van (169_)		03/04→
PUNTO (188_)		09/99→07/12
PUNTO Van (188_)		02/00→10/09
STILO (192_)		10/01→11/10
STILO Multi Wagon (192_)		01/03→08/08

FORD

COUGAR (EC_)		08/98→12/01
ECOSPORT		09/11→
FIESTA V (JH_, JD_)		11/01→03/10
FIESTA V Van		10/03→12/10
FOCUS (DAW, DBW)		10/98→12/07
FOCUS Estate (DNW)		02/99→12/07
FOCUS Saloon (DFW)		02/99→12/07
FUSION (JU_)		08/02→12/12
MONDEO I (GBP)		02/93→08/96
MONDEO II (BAP)		08/96→09/00
MONDEO III (B5Y)		10/00→03/07
MONDEO III Estate (BWY)		10/00→03/07
MONDEO III Saloon (B4Y)		10/00→03/07
TOURNEO CONNECT		06/02→12/13
TRANSIT Box (E_ _)		05/91→06/94
TRANSIT Box (E_ _)		06/94→07/00
TRANSIT Box (E_ _)		05/91→06/94
TRANSIT Box (E_ _)		06/94→07/00
TRANSIT Box (T_ _)		09/85→09/92
TRANSIT Bus (E_ _)		01/91→07/00
TRANSIT Bus (T_ _)		10/85→09/92
TRANSIT CONNECT (P65_, P70_, P80_)		06/02→
TRANSIT Platform/Chassis (E_ _)		04/91→07/00
TRANSIT Platform/Chassis (T_ _)		10/85→09/92
TRANSIT TOURNEO ('94)		08/94→12/00

HONDA

ACCORD IV (CB)		11/89→12/93
ACCORD IV Aerodeck (CB)		09/89→12/93
ACCORD IV Coupe (CB, CC)		05/89→12/93
ACCORD V (CC, CD)		06/92→12/97
ACCORD V (CE, CF)		09/95→10/98
ACCORD V Aerodeck (CE)		04/93→02/98
ACCORD V Coupe (CD)		04/93→12/98
ACCORD VI (CG, CK)		03/97→12/03
ACCORD VI Coupe (CG)		12/97→06/03
ACCORD VI Hatchback (CH)		12/99→12/02
ACCORD VIII (CP)		09/07→
ACCORD VIII (CU)		06/08→
ACCORD VIII Estate		07/08→
PILOT		09/08→
PILOT		09/02→07/08
PILOT		09/08→
SHUTTLE (RA)		06/94→06/04

HYUNDAI

ACCENT III (MC)		11/05→12/10
ACCENT III Saloon (MC)		11/05→11/10
COUPE (GK)		01/01→11/09
COUPE (RD)		06/96→04/02
EQUUS / CENTENNIAL ('99)		10/99→03/09
GETZ (TB)		08/02→12/10
i10 (IA)		08/13→
i10 (PA)		10/07→02/16
i10 Saloon		12/13→
MATRIX (FC)		06/01→08/10
SANTA FÉ I (SM)		11/00→03/06
SANTAMO		10/98→12/02
SONATA IV (EF)		03/98→12/05
TERRACAN (HP)		06/01→03/08
TIBURON Coupe		01/01→12/08
TRAJET (FO)		03/00→07/08
XG (XG)		12/98→12/05
XG Saloon		09/00→12/05

...A55

INFINITI

FX ('02)		09/02→12/08
I30		01/97→
QX4		01/97→
QX56		01/10→

ISUZU

ASCENDER		09/02→
D-MAX (8DH)		05/02→06/12
D-MAX (TFR, TFS)		06/12→
D-MAX Platform/Chassis		06/12→
D-MAX Platform/Chassis (8DH)		01/07→06/12
IMPULSE		01/90→12/93

JAGUAR

F-TYPE Convertible (QQ6_)		10/12→
F-TYPE Coupe (QQ6_)		10/13→
S-TYPE (CCX_)		01/99→12/08
XK Convertible (QQ6_)		03/06→07/14
XK Coupe (QQ6_)		03/06→07/14
X-TYPE (CF1_)		03/01→11/09
X-TYPE Estate (CF1_)		09/03→12/09

JEEP

COMPASS (MK49)		08/06→
PATRIOT (MK74)		02/07→

KIA

JOICE		02/00→
MAGENTIS (GD)		05/01→
PICANTO (BA)		04/04→
PICANTO (TA)		05/11→
RIO II (JB)		03/05→
RIO II Saloon (JB)		03/05→
ROADSTER		08/99→

LANCIA

FLAVIA Convertible (JS_)		03/12→12/14
LYBRA (839_)		07/99→10/05
LYBRA SW (839_)		07/99→10/05
MUSA (350_)		10/04→09/12

LAND ROVER

FREELANDER (LN_)		02/98→10/06
FREELANDER Soft Top (LN_)		02/98→10/06
RANGE ROVER II (LP_)		07/94→03/02

LDV

MAXUS Box		02/05→12/09
MAXUS Bus		02/05→12/09
MAXUS Platform/Chassis		02/05→12/09

LEXUS

IS I (JCE1_, GXE1_)		04/99→07/05
IS SportCross		10/01→10/05
LS (UCF20)		10/94→12/00
RX (MHU3_, GSU3_, MCU3_)		02/03→12/08

MASERATI

3200 GT Coupe		10/98→03/02
4200 GT Coupe		03/02→11/07
4200 GT SPYDER Convertible		10/01→

MAZDA

2 (DL, DJ)		11/14→
2 Saloon (DL)		01/15→
6 (GG)		06/02→12/08
6 Hatchback (GG)		08/02→12/08
6 Station Wagon (GY)		08/02→12/07
626 III Hatchback (GD)		06/87→05/92
626 IV Hatchback (GE)		08/91→08/98
MPV I (LV)		09/88→09/99

MERCEDES-BENZ

CITAN Box (415)		11/12→
CITAN Combi (415)		11/12→
CITAN Mixto (415)		11/12→
M-CLASS (W163)		02/98→06/05
S-CLASS (W126)		10/79→06/91
S-CLASS Coupe (C126)		08/80→06/91
SLK (R170)		04/96→04/04
SPRINTER 2-t Box (901, 902)		01/95→05/06
SPRINTER 2-t Bus (901, 902)		01/95→05/06
SPRINTER 2-t Platform/Chassis (901, 902)		01/95→05/06
SPRINTER 3-t Box (903)		01/95→05/06
SPRINTER 3-t Bus (903)		01/95→05/06

...A55

MERCEDES-BENZ

SPRINTER 3-t Platform/Chassis (903)		01/95→05/06
SPRINTER 4-t Box (904)		02/96→05/06
SPRINTER 4-t Bus (904)		02/96→05/06
SPRINTER 4-t Platform/Chassis (904)		02/96→05/06
SPRINTER 5-t Platform/Chassis (905)		04/01→05/06
SPRINTER Dumptruck (905)		04/01→

MG

MG 3		04/11→
MG X-POWER		01/03→04/08
MG ZT		06/01→07/05
MG ZT- T		10/01→07/05

MITSUBISHI

CARISMA (DA_)		07/95→06/06
ECLIPSE II (D3_A)		04/94→04/99
GALANT V (E5_A, E7_A, E8_A)		11/92→10/96
GALANT V Saloon (E5_A, E7_A, E8_A)		11/92→12/98
GALANT VI (EA_)		09/96→10/04
GALANT VI Estate (EA_)		09/96→10/03
GRANDIS (NA_W)		03/03→12/11
MIRAGE Saloon (A10_)		07/13→
MIRAGE / SPACE STAR Hatchback (A0_A, A05A, LA)		01/12→
OUTLANDER I (CU_W)		03/01→12/06
PAJERO / SHOGUN (IV) (V8_W, V9_W)		11/06→
PAJERO / SHOGUN Box (IV) (V90, V80)		11/06→
SANTAMO		03/99→12/04
SPACE RUNNER (N1_W, N2_W)		10/91→08/99
SPACE RUNNER (N6_W)		08/99→01/03
SPACE STAR Hatchback (A0_A)		05/12→
SPACE WAGON (D0_V/W)		01/84→01/92
SPACE WAGON (N3_W, N4_W)		05/91→11/98

NISSAN

JUKE (F15)		06/10→
MAXIMA / MAXIMA QX IV (A32)		03/94→08/00
MAXIMA / MAXIMA QX IV Station Wagon (A32)		10/97→12/00
NV200 Box		02/10→
NV200 / EVALIA Bus		07/10→
PATHFINDER II (R50)		09/95→07/05
PIXO (UA0)		03/09→
TITAN		10/03→
VANETTE Box (C22)		10/86→12/11
VANETTE Bus (C22)		10/86→12/11

OPEL

AGILA (B) (H08)		04/08→
GT Convertible		06/07→12/11

PEUGEOT

306 (7B, N3, N5)		04/93→10/03
306 Box Body / Hatchback		04/93→08/01
306 Break (7E, N3, N5)		06/94→04/02
306 Convertible (7D, N3, N5)		01/94→04/02
306 Hatchback (7A, 7C, N3, N5)		01/93→10/03
306 Van (N_, 7_)		07/93→08/02
405 I (15B)		01/87→12/93
405 I Break (15E)		06/87→08/92
405 II (4B)		01/92→11/99
405 II Break (4E)		08/92→10/98
406 (8B)		10/95→01/05
406 Break (8E/F)		10/96→10/04
605 (6B)		06/89→09/99
BOXER Box (230L)		03/94→06/03
BOXER Box (244)		12/01→
BOXER Bus (230P)		03/94→04/02
BOXER Bus (244, Z_)		12/01→
BOXER Platform/Chassis (244)		12/01→
BOXER Platform/Chassis (ZCT_)		03/94→04/02
PARTNER Box (5)		04/96→12/15
PARTNER Combispace (5F)		05/96→12/15
PARTNER Platform/Chassis		01/99→07/08

PORSCHE

911 (996)		09/97→08/05

...A55

PORSCHE

911 (997)		07/04→12/12
911 Convertible (996)		02/98→08/05
911 Convertible (997)		04/05→12/12
911 Targa (996)		12/01→08/05
911 Targa (997)		07/06→12/12
BOXSTER (986)		09/96→12/04
BOXSTER (987)		11/04→12/11
BOXSTER Spyder (987)		09/07→12/11
CARRERA GT (980)		07/03→12/06
CAYMAN (987)		11/05→12/13
PANAMERA (970)		03/09→10/16

PROTON

GEN 2 (CM_)		06/04→
GEN-2 PERSONA		01/07→07/16
SATRIA NEO		02/07→
SAVVY		10/05→

RENAULT

25 (B29_)		04/84→12/93
ESPACE I (J11_)		07/84→12/92
KANGOO BE BOP (KW0/1_)		02/09→
KANGOO Express (FW0/1_)		02/08→
KANGOO / GRAND KANGOO (KW0/1_)		02/08→
LAGUNA I (B56_, 556_)		11/93→08/02
LOGAN II		09/12→
LOGAN II Estate (K8_)		12/13→
MEGANE I (BA0/1_)		08/95→12/04
MEGANE I Cabriolet (EA0/1_)		10/96→08/03
MEGANE I Classic (LA0/1_)		09/96→08/08
MEGANE I Coach (DA0/1_)		03/96→08/03
MEGANE I Grandtour (KA0/1_)		03/99→08/03
SAFRANE I (B54_)		04/92→10/97
SAFRANE II (B54_)		07/96→12/00
SANDERO/STEPWAY II		11/13→
SPORT SPIDER (EF0_)		03/95→10/99

ROLLS-ROYCE

CORNICHE V Convertible		01/00→09/02

ROVER

75 (RJ)		02/99→05/05
75 Tourer (RJ)		08/01→06/06
600 (RH)		08/93→10/00

SAAB

9-3 (YS3F)		09/02→02/15
9-3 Convertible (YS3F)		08/03→02/15
9-3 Estate (YS3F)		03/05→02/15
9-5 (YS3E)		09/97→12/09
9-5 Estate (YS3E)		10/98→12/09
9-7X		06/04→07/12

SSANGYONG

KYRON		05/05→

SUBARU

IMPREZA Estate (GG)		10/00→12/08
IMPREZA Hatchback		10/00→12/07
IMPREZA Saloon (GD)		09/99→06/09
LEGACY III (BE, BH)		10/98→08/03
LEGACY III Estate (BE, BH)		10/98→08/03
OUTBACK (BE, BH)		10/98→08/03
SVX (CX)		09/92→12/97

SUZUKI

ALTO (HA25, HA35)		01/09→
LIANA (ER)		10/01→
LIANA Estate (ER)		07/01→12/07
LIANA Hatchback		06/01→
SWIFT IV (FZ, NZ)		10/10→

TOYOTA

COROLLA (CDE12_, ZZE12_, NDE12_, ZDE12_)		01/01→12/07
COROLLA Saloon (_E12J_, _E12T_)		08/00→03/08
HILUX VIII Platform/Chassis (_N1_)		05/15→
LAND CRUISER (LJ12_, KZJ12_, TRJ12_, KDJ12_, GRJ12_)		09/02→08/10
YARIS VERSO (_NLP2_, _NCP2_)		08/99→09/05

VOLVO

S60 I		07/00→04/10

...A55

VOLVO

S80 I (TS, XY)		05/98→02/08
V70 II (SW)		11/99→12/08
XC70 CROSS COUNTRY		10/97→10/07
XC90 I		06/02→12/14

VW

LT 28-35 II Bus (2DB, 2DE, 2DK)		04/96→07/06
LT 28-46 II Box (2DA, 2DD, 2DH)		04/96→07/06
LT 28-46 II Platform/Chassis (2DC, 2DF, 2DG, 2DL, 2DM)		04/96→07/06
MULTIVAN V (7HM, 7HN, 7HF, 7EF, 7EM, 7EN)		04/03→08/15
TRANSPORTER V Box (7HA, 7HH, 7EA, 7EH)		04/03→08/15
TRANSPORTER V Bus (7HB, 7HJ, 7EB, 7EJ, 7EF, 7EG, 7HF, 7EC)		04/03→08/15
TRANSPORTER V Platform/Chassis (7JD, 7JE, 7JL, 7JY, 7JZ, 7FD		04/03→08/15

A55+AK1

TOYOTA

LITEACE Box (CM3_V, KM3_V)		01/83→03/98
LITEACE Bus (CM30_G, KM30_G)		10/85→01/92
TOWN ACE Bus		05/95→10/01
TOWN ACE Bus (CR3_, CR2_)		10/82→12/91

A58

CHEVROLET

TAHOE (B2W)		12/99→12/06

FIAT

BRAVA (182_)		10/95→06/03
BRAVO I (182_)		10/95→10/01
MAREA (185_)		09/96→12/07
MAREA Weekend (185_)		09/96→12/07
PALIO (178BX)		04/96→
PALIO Weekend (178_)		04/96→
PUNTO (176_)		09/93→09/99
PUNTO Convertible (176_)		04/94→06/00
PUNTO Van (176_)		04/96→02/00
SIENA (172_)		08/06→
SIENA (178_)		04/96→10/13
STRADA Pickup (178_)		02/98→
STRADA Pickup (278_)		01/09→

LANCIA

Y (840_)		11/95→09/03

VW

AMAROK (2H_, S1B)		09/10→
AMAROK Platform/Chassis (S1B)		09/11→

A60

ALPINA

B10 (E34)		04/88→04/95
B10 Estate (E34)		11/93→04/96
B12 (E38)		12/95→07/01

BENTLEY

ARNAGE (RBS_)		04/98→10/09

BMW

5 (E34)		12/87→11/95
5 Touring (E34)		11/91→01/97
7 (E38)		10/94→11/01
X5 (E53)		05/00→02/07

CHEVROLET

CAMARO ('92)		12/92→12/02
CAMARO Convertible ('92)		10/92→12/02
CAPTIVA (C100, C140)		06/06→
CRUZE (J300)		05/09→
CRUZE Hatchback (J305)		12/10→
ORLANDO (J309)		12/10→
SPARK (M300) ('09)		12/09→
TACUMA		03/05→
TRANS SPORT		08/96→09/05

CHRYSLER

300 M (LR)		07/98→09/04
NEW YORKER		01/92→09/98
SEBRING (JS)		09/06→12/10

...A60

CHRYSLER

SEBRING Convertible (JS)		05/07→12/10
VISION		09/93→12/97

CITROËN

C2 (JM_)		09/03→
C2 ENTERPRISE		04/09→
C3 I (FC_)		02/02→
C4 AIRCROSS		08/10→
CX I (MA)		09/74→08/85
CX I Break (MA)		09/75→08/85
CX II		07/85→12/92
CX II Break		07/85→12/92
XANTIA (X1)		03/93→07/99
XANTIA (X2)		01/98→04/03
XANTIA Break (X1)		06/95→01/98
XANTIA Break (X2)		01/98→04/03

DACIA

DUSTER		04/10→
DUSTER Box		04/11→

DAEWOO

REZZO / TACUMA (KLAU)		06/00→

DAIHATSU

CHARADE		05/11→

DODGE

AVENGER		06/07→
CALIBER		06/06→
JOURNEY		06/08→

FIAT

FREEMONT (JC_, JF_)		08/11→
MULTIPLA (186_)		04/99→06/10

FORD

KA		01/08→
KA (RU8)		10/08→
RANGER (TKE)		04/11→
TRANSIT Box (FA_ _)		01/00→05/06
TRANSIT Bus ('06)		04/06→
TRANSIT Bus (FD_ _, FB_ _, FS_ _, FZ_ _, FC_ _)		01/00→05/06
TRANSIT Platform/Chassis ('06)		04/06→08/14
TRANSIT Platform/Chassis (FM_ _, FN_ _)		01/00→05/06
TRANSIT TOURNEO ('06)		07/06→08/14
TRANSIT Van/Box ('06)		04/06→

HONDA

ACCORD VIII (CP)		09/07→
ACCORD VIII (CU)		06/08→
ACCORD VIII Estate		07/08→
CIVIC VII Hatchback (EU, EP, EV)		03/99→02/06
CIVIC VII Saloon (ES)		10/00→04/06
ODYSSEY (RA_)		10/95→10/00
ODYSSEY (RB_)		09/98→
PILOT		09/02→07/08
STREAM (RN)		05/01→

HYUNDAI

GENESIS (BH)		01/08→12/15
GENESIS Coupe		01/08→
GRANDEUR (HG)		01/11→
GRANDEUR (TG)		06/03→
H350 Box		04/15→
H350 Bus		04/15→
H350 Platform/Chassis		04/15→
i30 (FD)		10/07→11/11
i30 CW (FD)		10/07→06/12
i800		02/08→
ix35 (LM, EL, ELH)		08/09→
iLoad		02/08→
SANTA FÉ II (CM)		10/05→12/12
SONATA V (NF)		12/04→11/12
TUCSON (JM)		08/04→

INFINITI

EX		09/07→
FX ('08)		07/08→
Q45 I		01/89→12/96
QX50		08/13→
QX56		01/10→
QX70		08/13→

...A60

IVECO

DAILY I Box Body / Estate		01/78→08/98
DAILY I Platform/Chassis		01/78→05/99
DAILY II Box Body / Estate		01/89→05/99
DAILY II Bus		01/89→05/99
DAILY II Dumptruck		01/89→05/99
DAILY II Platform/Chassis		01/89→05/99
DAILY III Box Body / Estate		11/97→10/09
DAILY III Bus		05/99→05/06
DAILY III Platform/Chassis		03/98→10/09

KIA

CARENS I (FC)		06/99→10/02
CARENS II (FJ)		07/02→
CEE'D Hatchback (ED)		12/06→12/12
CEE'D SW (ED)		09/07→12/12
CERATO (LD)		03/04→
CERATO II (TD)		01/09→
CERATO II Saloon (TD)		01/09→
CERATO KOUP (TD)		01/09→
CERATO Saloon (LD)		04/04→12/09
MAGENTIS (MG)		10/05→
OPIRUS (GH)		09/03→
OPTIMA I		01/10→
PICANTO (JA)		03/17→
PRO CEE'D (ED)		02/08→02/13
SEDONA I		06/98→10/01
SEDONA II		01/99→09/07
SORENTO I (JC)		08/02→
SORENTO II (XM)		11/09→
SOUL (AM)		01/09→
SOUL II (PS)		02/14→
SPORTAGE (JE_, KM_)		09/04→
SPORTAGE (SL)		09/09→

LADA

GRANTA (2190)		10/11→
GRANTA (2349)		10/11→
GRANTA Hatchback (2191)		08/14→
KALINA Estate (1117)		10/04→
KALINA Estate (2194)		11/13→
KALINA Hatchback (1119)		10/04→12/13
KALINA Hatchback (2192)		06/13→
KALINA Saloon (1118)		10/04→
VESTA		11/15→

LANCIA

FLAVIA Convertible (JS_)		03/12→12/14
KAPPA (838_)		08/94→10/01
KAPPA Coupe (838_)		07/96→03/01
KAPPA SW (838_)		07/96→10/01
YPSILON (843_)		10/03→12/11

LDV

CUB		08/98→09/01

LEXUS

ES (_V4_)		03/06→06/12
ES (MCV_, VZV_)		10/96→06/08
GS (JZS160_, UZS161_, UZS160_)		08/97→12/04
LS (UCF30)		10/00→08/06
LX (UZJ100)		09/97→03/08
RX (MCU15)		07/00→05/03
SC (UZZ40_)		01/01→07/10

MAZDA

2 (DE)		07/07→06/15
2 (DY)		02/03→06/07
2 Saloon (DE)		05/10→06/15
3 (BL)		12/08→09/14
3 Saloon (BL)		12/08→
MPV II (LW)		08/99→02/06
PREMACY (CP)		07/99→03/05

MERCEDES-BENZ

A-CLASS (W168)		07/97→08/04
SPRINTER 2-t Box (901, 902)		01/95→05/06
SPRINTER 2-t Bus (901, 902)		01/95→05/06
SPRINTER 2-t Platform/Chassis (901, 902)		01/95→05/06
SPRINTER 3-t Box (903)		01/95→05/06
SPRINTER 3-t Bus (903)		01/95→05/06
SPRINTER 3-t Platform/Chassis (903)		01/95→05/06

...A60

MERCEDES-BENZ

SPRINTER 4-t Box (904)		02/96→05/06
SPRINTER 4-t Bus (904)		02/96→05/06
SPRINTER 4-t Platform/Chassis (904)		02/96→05/06
SPRINTER 5-t Platform/Chassis (905)		04/01→05/06
SPRINTER Dumptruck (905)		04/01→
VANEO (414)		02/02→07/05
VARIO Box Body / Estate		09/96→
VARIO Bus		09/96→
VARIO Cab with engine		09/96→
VARIO Dumptruck		09/96→
VARIO Platform/Chassis		09/96→

MITSUBISHI

ECLIPSE II (D3_A)		04/94→04/99
LANCER Estate (CS_W)		09/03→12/08
LANCER Saloon (CS_A, CT0)		03/00→12/13
LANCER Saloon (CY/Z_A)		03/07→
LANCER SPORTBACK (CX_A)		10/07→

NISSAN

INTERSTAR Box (X70)		04/02→
INTERSTAR Bus (X70)		04/02→
INTERSTAR Platform/Chassis		08/03→
NOTE (E11)		01/05→06/12
NP300 NAVARA (D40)		10/04→
NP300 NAVARA Platform/Chassis (D40)		08/08→
PATHFINDER III (R51)		01/05→
PATHFINDER IV (R52)		09/12→
PRIMASTAR Box (X83)		09/02→
PRIMASTAR Bus (X83)		03/01→
PRIMASTAR Platform/Chassis		07/02→08/06
SERENA (C23M)		06/91→09/01
SERENA (C24)		06/99→12/13
TIIDA Hatchback		05/04→12/13
TIIDA Hatchback (C11X)		02/06→12/11
TIIDA Saloon (SC11X)		05/04→12/13
TITAN		10/03→
VANETTE CARGO Box (HC 23)		09/94→05/02
VANETTE CARGO Bus (HC 23)		09/94→05/01
X-TRAIL (T30)		06/01→01/13
X-TRAIL (T31)		03/07→07/14

OPEL

ANTARA		05/06→
KARL		01/15→
MERIVA		05/03→05/10
OMEGA B (25_, 26_, 27_)		03/94→07/03
OMEGA B Estate (21_, 22_, 23_)		03/94→07/03
SIGNUM		05/03→12/08
SPEEDSTER		09/00→
VECTRA C		04/02→
VECTRA C Estate		10/03→
VECTRA C GTS		08/02→
VIVARO Box (F7)		08/01→
VIVARO Combi (J7)		08/01→
VIVARO Platform/Chassis (E7)		08/01→
ZAFIRA A (F75_)		04/99→06/05

PEUGEOT

406 (8B)		10/95→01/05
406 Break (8E/F)		10/96→10/04
1007 (KM_)		04/05→
4008		05/12→

PORSCHE

PANAMERA (970)		03/09→10/16

RENAULT

LAGUNA I (B56_, 556_)		11/93→08/02
LAGUNA I Grandtour (K56_)		09/95→08/02
LAGUNA II (BG0/1_)		03/01→
LAGUNA II Grandtour (KG0/1_)		03/01→
LATITUDE (L70_)		07/10→
MASTER I Box (T__)		07/80→07/98
MASTER I Bus (T__)		08/80→07/98
MASTER I Platform/Chassis (P__)		07/80→07/98
MEGANE II (BM0/1_, CM0/1_)		07/01→10/12

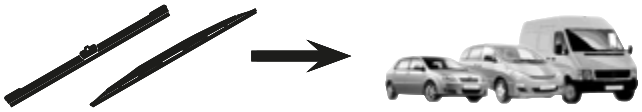

...A60

RENAULT
MEGANE II Coupé-Cabriolet (EM0/1_)		09/03→03/10
MEGANE II Estate (KM0/1_)		08/03→08/12
MEGANE II Saloon (LM0/1_)		09/03→
MEGANE Scenic (JA0/1_)		10/96→12/01
SAFRANE I (B54_)		04/92→10/97
SAFRANE II (B54_)		07/96→12/00
SCÉNIC I (JA0/1_)		09/99→10/03
TRAFIC II Box (FL)		03/01→
TRAFIC II Bus (JL)		03/01→
TRAFIC II Platform/Chassis (EL)		03/01→

ROLLS-ROYCE
SILVER SERAPH		03/98→09/02

SAAB
9-5 (YS3E)		09/97→12/09
9-5 Estate (YS3E)		10/98→12/09
9-7X		06/04→07/12

SSANGYONG
KORANDO		07/10→
RODIUS		05/05→
RODIUS II		07/13→
STAVIC		02/05→

SUBARU
LEGACY IV (BL, BP)		09/03→12/15
LEGACY IV Estate (BL, BP, B13_)		09/03→12/09
OUTBACK (BL, BP)		09/03→06/10

TOYOTA
AVENSIS (T25_)		04/03→11/08
AVENSIS Estate (T25, CDT25_, ZZT25_)		04/03→11/08
AVENSIS Saloon (T25)		04/03→11/08
COROLLA Estate (_E12J_, _E12T_)		03/01→12/08
PICNIC (_XM10)		05/96→12/01
PRIUS Saloon (NHW11_)		05/00→01/04
RAV 4 II (CLA2_, XA2_, ZCA2_, ACA2_)		06/00→11/05
SIENNA (MCL10_)		08/97→12/02
VIOS/YARIS Saloon (ZSP9_, NCP9_)		08/05→
YARIS (SCP9_, NSP9_, KSP9_, NCP9_, ZSP9_)		01/05→

VOLVO
S60 I		07/00→04/10
S80 I (TS, XY)		05/98→02/08
V70 II (SW)		11/99→12/08
XC70 CROSS COUNTRY		10/97→10/07
XC90 I		06/02→12/14

VW
AMAROK (2H_, S1B)		09/10→
AMAROK Platform/Chassis (S1B)		09/11→
LT 28-35 II Bus (2DB, 2DE, 2DK)		04/96→07/06
LT 28-46 II Box (2DA, 2DD, 2DH)		04/96→07/06
LT 28-46 II Platform/Chassis (2DC, 2DF, 2DG, 2DL, 2DM)		04/96→07/06
MULTIVAN V (7HM, 7HN, 7HF, 7EF, 7EM, 7EN)		04/03→08/15
POLO Saloon (602, 604, 612, 614)		05/09→
TRANSPORTER V Box (7HA, 7HH, 7EA, 7EH)		04/03→08/15
TRANSPORTER V Bus (7HB, 7HJ, 7EB, 7EJ, 7EF, 7EG, 7HF, 7EC)		04/03→08/15
TRANSPORTER V Platform/Chassis (7JD, 7JE, 7JL, 7JY, 7JZ, 7FD		04/03→08/15

A61

MERCEDES-BENZ
190 (W201)		10/82→08/93
CABRIOLET (A124)		09/91→06/93
C-CLASS (W202)		03/93→05/00
C-CLASS Estate (S202)		06/96→03/01
CLK (C208)		06/97→09/02
CLK Convertible (A208)		03/98→03/02
COUPE (C124)		03/87→05/93
E-CLASS (W124)		02/93→06/96

...A61

MERCEDES-BENZ
E-CLASS (W210)		06/95→08/03
E-CLASS Convertible (A124)		05/93→03/98
E-CLASS Coupe (C124)		06/93→06/97
E-CLASS Estate (S124)		06/93→06/96
E-CLASS Estate (S210)		06/96→03/03
KOMBI Estate (S124)		09/85→07/93
Saloon (W124)		12/84→08/93
SL (R129)		03/89→12/01

OPEL
SINTRA		11/96→04/99

A65

CHRYSLER
GRAND VOYAGER V (RT)		10/07→

CITROËN
C1 (PM_, PN_)		06/05→09/14
C5 I (DC_)		03/01→03/05
C5 I Break (DE_)		06/01→08/04
DISPATCH (U6U)		06/94→12/06
DISPATCH Platform/Chassis		10/99→10/06
DISPATCH Van/Box (BS_, BT_, BY_, BZ_)		06/94→10/06
SYNERGIE		03/94→07/02
XSARA PICASSO (N68)		12/99→

DODGE
CARAVAN ('08)		01/08→

FIAT
SCUDO Box (220_)		02/96→12/06
SCUDO Combinato (220_)		02/96→12/06
SCUDO Platform/Chassis (220_)		09/96→12/06
SEDICI (FY_)		06/06→10/14
ULYSSE (220_)		06/94→08/02

HONDA
ACCORD VII (CL)		01/03→09/12
ACCORD VII (CM)		09/02→05/08
ACCORD VII Tourer (CM)		04/03→05/08
ACCORD IX Saloon (CR)		09/12→
CIVIC IX (FK)		02/12→
CIVIC IX Saloon (FB, FG)		09/11→
CIVIC IX Tourer (FK)		01/14→
CIVIC X Hatchback (FC_, FK)		09/16→
CIVIC X Saloon (FC_)		09/15→
CR-V III (RE)		06/06→
CR-V IV (RE)		01/12→
CR-Z (ZF1)		06/10→
FR-V (BE)		08/04→
HR-V (RU)		11/14→
JAZZ III (GE, GG_, GP_)		10/07→
JAZZ IV (GK)		09/13→

HYUNDAI
ACCENT IV (RB)		11/10→
ACCENT IV Saloon (RB)		08/10→
ELANTRA Saloon (MD, UD)		09/10→
GENESIS (DH)		06/14→
H-1 Box		10/97→04/08
H-1 Platform/Chassis		06/00→10/05
H-1 / STAREX		06/97→
H350 Box		04/15→
H350 Bus		04/15→
H350 Platform/Chassis		04/15→
HIGHWAY VAN		03/00→03/04
IONIQ		03/16→
TRAJET (FO)		03/00→07/08

INFINITI
G Convertible		09/10→
G Coupe		09/07→
G Saloon ('02)		10/02→
G Saloon ('07)		01/07→
M (Y51)		03/10→
Q50		04/13→
Q60 Convertible		10/13→
Q60 Coupe		09/16→
Q60 Coupe		10/13→
Q70 (Y51)		03/13→

KIA
CARENS III (UN)		09/06→

...A65

KIA
NIRO		09/16→
OPTIMA II		09/15→
OPTIMA Sportswagon (JF)		09/16→
RIO IV (YB, SC)		01/17→
RIO IV Saloon (SC, FB)		07/17→
SEDONA III		09/05→
STINGER (CK)		06/17→
STONIC (YB)		07/17→

LANCIA
THESIS (841_)		07/02→07/09
VOYAGER MPV (RT_)		09/11→12/14
ZETA (22_)		05/95→09/02

LEXUS
RX (MHU3_, GSU3_, MCU3_)		02/03→12/08

LOTUS
ELISE ('00)		11/00→
ELISE 340 R		02/00→02/01
EUROPA S		07/06→
EXIGE		06/12→
EXIGE (SCC_)		05/00→06/12

MASERATI
GRANCABRIO		03/10→
GRAN TURISMO		09/07→
QUATTROPORTE V		03/04→

MAZDA
5 (CR19)		02/05→12/10
5 (CW)		09/10→

MERCEDES-BENZ
A-CLASS (W168)		07/97→08/04
VANEO (414)		02/02→07/05

MITSUBISHI
COLT CZC Convertible (RG)		05/06→07/09
COLT VI (Z3_A, Z2_A)		10/02→12/12
GALANT Saloon (DJ_, ED_, EF_)		10/03→
SPACE WAGON (N9_W, N8_W)		10/98→12/04

NISSAN
ALMERA TINO (V10)		12/98→02/06
ALTIMA II		08/01→04/07
ALTIMA III		10/06→07/13
LEAF (ZE0)		11/10→
MAXIMA / MAXIMA QX V (A33)		04/99→11/03
MICRA V (K14)		12/16→
MURANO I (Z50)		08/03→09/08
MURANO II (Z51)		10/07→09/14
MURANO III (Z52)		10/14→
NV400 Box		11/11→
NV400 Bus		11/11→
NV400 Platform/Chassis		11/11→
PRIMERA (P12)		01/02→
PRIMERA Estate (WP12)		01/02→
PRIMERA Hatchback (P12)		01/02→

OPEL
MOVANO B Box		05/10→
MOVANO B Bus		12/10→
MOVANO B Platform/Chassis		05/10→

PEUGEOT
107		06/05→
206+ (T3E)		01/09→
206 CC (2D)		09/00→
206 Hatchback (2A/C)		08/98→
206 Saloon		03/07→
206 SW (2E/K)		07/02→
206 Van		04/99→03/09
307 (3A/C)		08/00→
307 Break (3E)		03/02→12/09
307 SW (3H)		03/02→12/09
406 Coupe (8C)		03/97→02/05
806 (221)		06/94→08/02
EXPERT (224)		10/95→12/06
EXPERT Box (222)		07/95→12/06
EXPERT Platform/Chassis (223)		12/95→12/06

RENAULT
MASTER III Box (FV)		02/10→
MASTER III Bus (JV)		02/11→
MASTER III Platform/Chassis (EV, HV, UV)		02/10→

...A65

RENAULT
TWINGO I (C06_)		03/93→10/12
TWINGO I Box (S06_)		03/93→06/12

SMART
FORFOUR (454)		01/04→06/06

SUBARU
IMPREZA Hatchback (GP)		10/11→

SUZUKI
SX4 (EY, GY)		06/06→
SX4 Saloon (GY)		10/07→

TOYOTA
AURIS (NRE15_, ZZE15_, ADE15_, ZRE15_, NDE15_)		10/06→09/12
AVENSIS VERSO (_CLM2_, _ACM2_)		08/01→11/09
AYGO (WNB1_, KGB1_)		02/05→
CAMRY (MCV3_, ACV3_, _XV3_)		08/01→11/06
CELICA (ZZT23_)		08/99→03/06
COROLLA Saloon (NRE18_, ZRE17_, ZRE18_, NDE18_)		06/13→
COROLLA Verso (ZDE12_, CDE12_)		07/01→07/04
COROLLA Verso (ZER_, ZZE12_, R1_)		03/04→04/09
PRIUS Hatchback (NHW20_)		08/03→03/09
SIENNA (MCL2_, GSL2_)		01/03→12/09

A65+AK1

MITSUBISHI
L 400 Box (PD_W, PC_W, PB_V, PA_W, PA_V)		12/94→04/07
L 400 / SPACE GEAR Bus (PD_W, PC_W, PA_V, PB_V, PA_W)		06/94→04/07

A70

CHRYSLER
VOYAGER III (GS)		01/95→03/01
VOYAGER IV (RG, RS)		09/99→12/08

CITROËN
DISPATCH MPV		01/07→
DISPATCH Platform/Chassis		07/11→
DISPATCH Van/Box		01/07→

DODGE
CARAVAN ('00) (RG_)		02/00→12/07
CARAVAN ('95)		01/95→03/01

FIAT
SCUDO (270_, 272_)		01/07→
SCUDO Box (270_, 272_)		01/07→
SCUDO Platform/Chassis (270_, 272_)		01/07→

FORD
TRANSIT Box (FA_ _)		01/00→05/06
TRANSIT Bus ('06)		04/06→
TRANSIT Bus (FD_ _, FB_ _, FS_ _, FZ_ _, FC_ _)		01/00→05/06
TRANSIT Platform/Chassis ('06)		04/06→08/14
TRANSIT Platform/Chassis (FM_ _, FN_ _)		01/00→05/06
TRANSIT TOURNEO ('06)		07/06→08/14
TRANSIT Van/Box ('06)		04/06→

KIA
CARENS IV		03/13→

MITSUBISHI
GRANDIS (NA_W)		03/03→12/11
i (HA_)		01/06→

PEUGEOT
307 (3A/C)		08/00→
307 Break (3E)		03/02→12/09
307 SW (3H)		03/02→12/09
EXPERT Box (VF3A_, VF3U_, VF3X_)		01/07→
EXPERT Platform/Chassis		01/07→
EXPERT Tepee (VF3V_)		01/07→

SUBARU
TREZIA		11/10→

TOYOTA
PROACE Box Body / Estate		06/13→03/16

...A70

TOYOTA

VERSO S (NLP12_, NCP12_, NSP12_)	11/10→10/16
YARIS (NHP13_, NSP13_, NCP13_, KSP13_, NLP13_)	12/10→

A290R

FIAT

CINQUECENTO (170_)	07/91→07/99

A321R

FIAT

PANDA (141_)	03/80→07/04
PANDA Van (141_)	01/86→02/04

A323R

FIAT

UNO (146_)	01/83→06/06
UNO (146_)	08/00→12/13
UNO Box (146_)	02/88→07/96

A332R

FIAT

BRAVO I (182_)	10/95→10/01
SEICENTO / 600 (187_)	01/98→01/10
SEICENTO / 600 Van (287_)	01/98→01/10

A335R

FIAT

PUNTO (176_)	09/93→09/99

A338R

FIAT

PANDA (169_)	09/03→

LANCIA

MUSA (350_)	10/04→09/12

A339R

LANCIA

YPSILON (843_)	10/03→12/11

A350R

FIAT

MULTIPLA (186_)	04/99→06/10

A351R

FIAT

PUNTO (188_)	09/99→07/12

A352R

FIAT

PUNTO (188_)	09/99→07/12

A353R

FIAT

STILO (192_)	10/01→11/10

A354R

FIAT

DOBLO Cargo (223_)	11/00→
DOBLO MPV (119_, 223_)	03/01→

A380R

ALFA ROMEO

147 (937_)	11/00→12/10
156 Sportwagon (932_)	01/00→05/06

LANCIA

Y (840_)	11/95→09/03

A382R

FIAT

IDEA (350_)	12/03→

A410R

FIAT

MAREA Weekend (185_)	09/96→12/07

A411R

LANCIA

LYBRA SW (839_)	07/99→10/05

A5050

LAND ROVER

DISCOVERY II (LT_)	10/98→08/04

A5840

FIAT

IDEA (350_)	12/03→
PANDA (169_)	09/03→
PANDA Van (169_)	03/04→

LANCIA

MUSA (350_)	10/04→09/12

A5841

FIAT

PUNTO (176_)	09/93→09/99
PUNTO Convertible (176_)	04/94→06/00
PUNTO Van (176_)	04/96→02/00

LANCIA

Y (840_)	11/95→09/03

A6051

ALPINA

B3 (E46)	03/99→01/06
B3 Convertible (E46)	03/99→12/05
B3 Coupe (E46)	03/99→01/06
B3 Estate (E46)	03/99→01/06

BMW

3 (E46)	02/98→04/05
3 Compact (E46)	03/01→02/05
3 Convertible (E46)	04/00→12/07
3 Coupe (E46)	02/99→07/06
3 Touring (E46)	10/99→05/05

A6555

ALPINA

B10 (E39)	12/96→05/04
B10 Estate (E39)	01/97→05/04
D10 (E39)	04/00→10/03
D10 Estate (E39)	04/00→10/03

BMW

5 (E39)	09/95→06/03
5 Touring (E39)	09/96→05/04

A6565

LAND ROVER

RANGE ROVER III (LM_)	03/02→12/12

A7065

FORD

GALAXY (WGR)	03/95→05/06

SEAT

ALHAMBRA (7V8, 7V9)	04/96→03/10

VW

SHARAN (7M8, 7M9, 7M6)	05/95→03/10

AF25

SEAT

Mii (KF1_)	10/11→

SKODA

CITIGO	10/11→

VW

LOAD UP	12/14→
SCIROCCO (137, 138)	05/08→11/17
UP	08/11→

AF27

SKODA

YETI (5L)	05/09→12/17

AF28

SEAT

ATECA	04/16→

SKODA

RAPID (NH3)	07/12→

VW

GOLF ALLTRACK (BA5)	12/14→
GOLF VI (5K1)	10/08→11/13
GOLF VII (5G1, BE1)	08/12→
GOLF VII Estate (BA5)	04/13→
POLO (6R, 6C)	06/09→
POLO (AW1, BZ1)	06/17→
POLO Van (6R)	01/14→

...AF28

VW

TOURAN (5T1)	05/15→

AF28X

SEAT

LEON (1P1)	05/05→12/12

VOLVO

V40 Hatchback	03/12→

VW

PASSAT ALLTRACK (365)	01/12→12/14
PASSAT Variant (3C5)	08/05→10/11
PASSAT Variant (365)	08/10→12/14
POLO (9N_)	10/01→01/12

AF28Z

BMW

1 (E81)	09/06→12/11
1 (E87)	02/03→01/13

MINI

MINI CLUBMAN (R55)	10/06→06/14
MINI CLUBVAN (R55)	12/12→06/14

AF30Z

BMW

X1 (E84)	03/09→06/15

MERCEDES-BENZ

CLS Shooting Brake (X218)	10/12→

AF33X

ALPINA

XD3 (F25)	04/13→

BMW

X3 (F25)	09/10→

SEAT

ALTEA (5P1)	
ALTEA XL (5P5, 5P8)	
EXEO ST (3R5)	05/09→
IBIZA V (6J5, 6P1)	03/08→
IBIZA V SPORTCOUPE (6J1, 6P5)	07/08→

SKODA

FABIA	12/06→12/14
ROOMSTER (5J)	03/06→05/15
ROOMSTER Praktik (5J)	03/07→05/15

VW

GOLF V (1K1)	10/03→02/09
GOLF V Variant (1K5)	06/07→07/09
GOLF VI Variant (AJ5)	07/09→07/13
GOLF PLUS (5M1, 521)	01/05→12/13
POLO (9N_)	10/01→01/12
TIGUAN (5N_)	09/07→
TOUAREG (7LA, 7L6, 7L7)	10/02→05/10

AF34

SEAT

ALHAMBRA (710, 711)	06/10→
IBIZA V (KJ1)	01/17→
LEON (5F1)	09/12→
LEON ST (5F8)	08/13→

SKODA

FABIA (NJ3)	08/14→
KAROQ (NU7)	07/17→
OCTAVIA Combi (5E5)	11/12→

VW

GOLF PLUS (5M1, 521)	01/05→12/13
GOLF SPORTSVAN (AM1)	02/14→
PASSAT ALLTRACK (3G5)	05/15→
PASSAT Variant (3G5)	08/14→
SHARAN (7N1, 7N2)	05/10→
TIGUAN (AD1)	01/16→
TIGUAN ALLSPACE (BW2)	03/17→
TOURAN (1T3)	05/10→05/15
T-ROC (A11)	11/17→

AF34Y

AUDI

A3 (8V1, 8VK)	04/12→
A3 Sportback (8VA, 8VF)	09/12→

...AF34Y

AUDI

Q2	06/16→
Q5 (8R)	11/08→

BMW

X1 (F48)	11/14→
X2 (F39)	11/17→

PORSCHE

CAYENNE (92A)	06/10→

AF37Y

AUDI

A1 (8X1, 8XK)	05/10→
A1 Sportback (8XA, 8XF)	09/11→
A4 Allroad (8WH, B9)	01/16→
A4 Avant (8W5, B9)	08/15→
Q5 (FYB)	05/16→

VW

TOUAREG (7P5)	01/10→

AF38X

SKODA

FABIA Combi	10/07→12/14
OCTAVIA (1Z3)	02/04→06/13
OCTAVIA Combi (1Z5)	02/04→06/13

VW

CADDY III Box (2KA, 2KH, 2CA, 2CH)	03/04→05/15
CADDY III Estate (2KB, 2KJ, 2CB, 2CJ)	03/04→05/15
MULTIVAN V (7HM, 7HN, 7HF, 7EF, 7EM, 7EN)	04/03→08/15
TOURAN (1T1, 1T2)	02/03→05/10
TRANSPORTER V Box (7HA, 7HH, 7EA, 7EH)	04/03→08/15
TRANSPORTER V Bus (7HB, 7HJ, 7EB, 7EJ, 7EF, 7EG, 7HF, 7EC)	04/03→08/15

AF38Z

FIAT

DOBLO Box Body / Estate (263_)	02/10→
DOBLO MPV (263_)	11/09→

LAND ROVER

RANGE ROVER SPORT (LW_)	04/13→

MERCEDES-BENZ

SPRINTER 3,5-t Box (906)	06/06→
SPRINTER 3,5-t Bus (906)	06/06→
SPRINTER 3-t Box (906)	06/06→
SPRINTER 3-t Bus (906)	06/06→
SPRINTER 4,6-t Box (906)	06/06→
SPRINTER 4,6-t Bus	06/06→
SPRINTER 5-t Box (906)	06/06→
SPRINTER 5-t Bus	06/06→
VIANO (W639)	09/03→
VITO Bus (W639)	09/03→
VITO / MIXTO Box (W639)	09/03→

OPEL

COMBO Box Body / Estate (X12)	02/12→
COMBO Tour (X12)	02/12→

PORSCHE

MACAN (95B)	02/14→

VW

CRAFTER 30-35 Bus (2E_)	04/06→12/16
CRAFTER 30-50 Box (2E_)	04/06→12/16

AF39Y

AUDI

A4 Avant (8K5, B8)	11/07→12/15
A6 Allroad (4GH, 4GJ)	01/12→
A6 Avant (4G5, C7, 4GD)	05/11→
Q3 (8U)	06/11→
Q7 (4M)	01/15→

BENTLEY

BENTAYGA	10/15→

AF40

SEAT

LEON SC (5F5)	01/13→

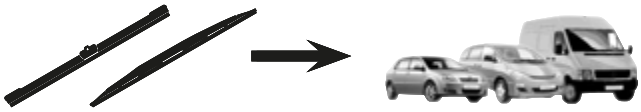

...AF40

SEAT
TOLEDO IV (KG3) 07/12→

SKODA
FABIA Estate (NJ5) 10/14→
RAPID Spaceback (NH1) 07/12→
SUPERB Estate (3V5) 03/15→
SUPERB Estate (3T5) 10/09→05/15

VW
CADDY ALLTRACK Box (SAA) 05/15→
CADDY ALLTRACK Estate (SAB) 05/15→
CADDY IV Box (SAA, SAH) 05/15→
CADDY IV Estate (SAB, SAJ) 05/15→
MULTIVAN VI (SGF, SGM, SGN) 04/15→
TRANSPORTER VI Box (SGA, SGH) 04/15→
TRANSPORTER VI Bus (SGB, SGG, SGJ) 04/15→

AFL35

ABARTH
500 (312_) 01/08→
500C (312_) 09/09→

CHEVROLET
TRAX 12/12→

FIAT
500 (312_) 10/07→
500 C (312_) 09/09→
500X (334_) 09/14→

FORD
KA 01/08→
KA (RU8) 10/08→

HYUNDAI
ix20 (JC) 11/10→

KIA
VENGA (YN) 02/10→

LADA
XRAY 02/16→

NISSAN
PULSAR Hatchback (C13) 08/12→

OPEL
MOKKA 06/12→

RENAULT
CAPTUR 06/13→
CLIO Grandtour IV 01/13→
CLIO IV 11/12→
CLIO IV Box 01/14→
TWINGO III 09/14→
ZOE 06/12→

SMART
FORFOUR Hatchback (453) 07/14→
FORTWO Convertible (453) 09/15→
FORTWO Coupe (453) 07/14→

AFL38

ABARTH
GRANDE PUNTO (199_) 12/07→12/12
PUNTO (199_) 03/12→
PUNTO EVO (199_) 07/08→02/12

CHEVROLET
AVEO Hatchback (T300) 03/11→
AVEO Saloon (T300) 03/11→

CHRYSLER
YPSILON 05/11→

FIAT
500L (199_) 09/12→
GRANDE PUNTO (199_) 10/05→
GRANDE PUNTO Van (199_) 10/05→06/13
IDEA (350_) 12/03→
LINEA (323_) 06/07→
PANDA (312_, 319_) 02/12→
PANDA VAN (312_) 02/12→
PUNTO (199_) 03/12→
PUNTO EVO (199_) 07/08→
PUNTO EVO Van (199_) 03/09→02/12
PUNTO Van (199_) 02/06→

FORD
FIESTA VI 06/08→

...AFL38

FORD
FIESTA VI Van 01/09→
FIESTA VII 01/17→
FIESTA Saloon 04/10→
TOURNEO COURIER Kombi 02/14→
TRANSIT COURIER Box 02/14→
TRANSIT COURIER Kombi 02/14→

LANCIA
MUSA (350_) 10/04→09/12
YPSILON (312_) 05/11→

NISSAN
QASHQAI / QASHQAI +2 I (J10, JJ10) 12/06→12/13

AFL40

ALFA ROMEO
147 (937_) 11/00→12/10
GT (937_) 11/03→09/10
MITO (955_) 08/08→

ALPINA
B3 Convertible (E93) 09/07→05/13
B3 Coupe (E92) 09/07→02/14
D3 Coupe (E92) 07/08→05/13

AUDI
A1 (8X1, 8XK) 05/10→
A1 Sportback (8XA, 8XF) 09/11→

BMW
3 Convertible (E93) 05/06→12/13
3 Coupe (E92) 01/05→12/13
X1 (F48) 11/14→

CITROËN
BERLINGO (B9) 04/08→
BERLINGO Box (B9) 04/08→
BERLINGO Platform/Chassis (B9) 04/08→
C3 II 11/09→
C3 III (SX) 07/16→
C3 Picasso 02/09→
C-ELYSEE 11/12→
DS3 11/09→07/15
DS3 Convertible 01/13→07/15

FIAT
CROMA (194_) 06/05→
DOBLO Box Body / Estate (263_) 02/10→
DOBLO MPV (263_) 11/09→
DOBLO Platform/Chassis (263_) 02/10→
TIPO Estate (356_) 03/16→
TIPO Hatchback (356_) 03/16→
TIPO Saloon (356_) 10/15→

FORD
KA 08/14→
KA + Saloon 08/14→
KUGA I 03/08→

OPEL
ADAM 10/12→
COMBO Box Body / Estate (X12) 02/12→
COMBO Platform/Chassis 08/12→
COMBO Tour (X12) 02/12→
CORSA D 07/06→
CORSA D Van 07/06→
CORSA E 09/14→
CORSA E Van 09/14→
CROSSLAND X (P17) 03/17→

PEUGEOT
208 03/12→
208 Box 10/12→
301 11/12→
2008 03/13→
3008 SUV (M_) 05/16→
5008 II 12/16→
PARTNER Box 04/08→
PARTNER Platform/Chassis 01/09→
PARTNER Tepee 04/08→

RENAULT
CLIO Grandtour (KR0/1_) 02/08→
CLIO III (BR0/1, CR0/1) 01/05→

...AFL40

RENAULT
FLUENCE (L30_) 02/10→
LAGUNA Coupe (DT0/1) 09/08→
LAGUNA III (BT0/1) 10/07→
LAGUNA III Grandtour (KT0/1) 10/07→
MEGANE CC (EZ0/1_) 06/10→
MEGANE III Coupe (DZ0/1_) 11/08→
MEGANE III Grandtour (KZ0/1) 11/08→
MEGANE III Hatchback (BZ0_) 11/08→
THALIA II (LU1/2_) 09/08→
TWINGO II (CN0_) 03/07→
WIND (E4M_) 07/10→

SEAT
ALHAMBRA (710, 711) 06/10→
IBIZA V (6J5, 6P1) 03/08→
IBIZA V SPORTCOUPE (6J1, 6P5) 07/08→
IBIZA V ST (6J8, 6P8) 03/10→
LEON (5F1) 09/12→
LEON SC (5F5) 01/13→
LEON ST (5F8) 08/13→
Mii (KF1_) 10/11→
TOLEDO IV (KG3) 07/12→

SKODA
CITIGO 10/11→
FABIA (NJ3) 08/14→
FABIA Estate (NJ5) 10/14→
RAPID (NH3) 07/12→
RAPID Spaceback (NH1) 07/12→

VW
GOLF SPORTSVAN (AM1) 02/14→
LOAD UP 12/14→
POLO (6R, 6C) 06/09→
POLO Van (6R) 01/14→
SHARAN (7N1, 7N2) 05/10→
TOURAN (5T1) 05/15→
UP 08/11→
VENTO 01/10→

AFL43

ALPINA
B6 Convertible (F12) 09/11→
B6 Coupe (F06) 04/14→
B6 Coupe (F13) 09/11→

BMW
6 Convertible (F12) 03/11→
6 Coupe (F13) 11/10→
6 Gran Coupe (F06) 09/11→

FORD
FOCUS II (DA_) 07/04→09/12
FOCUS II Convertible 10/06→09/10
FOCUS II Estate (DA_) 07/04→09/12
FOCUS II Saloon (DA_) 04/05→

JAGUAR
XE (JA_) 03/15→
XF (JB_) 05/15→
XF SPORTBRAKE (X260) 07/17→

PEUGEOT
207 (WA_, WC_) 02/06→
207 CC (WD_) 02/07→
207 Saloon 12/07→
207 SW (WK_) 02/07→
207 Van 04/07→

TESLA
MODEL S 09/12→

AFL45

ALFA ROMEO
159 (939_) 09/05→12/12
159 Sportwagon (939_) 03/06→12/12
BRERA (939_) 01/06→05/11
GIULIA (952_) 10/15→
GIULIETTA (940_) 04/10→
SPIDER (939_) 03/06→03/11
STELVIO (949_) 12/16→

ALPINA
B4 Convertible (F33) 03/14→

...AFL45

ALPINA
B4 Coupe (F32) 03/14→
B5 (F10) 09/10→12/16
B5 Estate (F11) 09/10→12/16
B7 (F01, F02) 03/09→01/16
D4 Convertible (F33) 09/14→
D4 Coupe (F32) 09/14→
D5 (F10) 09/11→12/16
D5 Touring (F11) 09/11→12/16

AUDI
A3 (8V1, 8VK) 04/12→
A3 Convertible (8V7, 8VE) 10/13→
A3 Limousine (8VS, 8VM) 05/13→
A3 Sportback (8VA, 8VF) 09/12→

BMW
1 (F20) 11/10→
1 (F21) 12/11→
2 Convertible (F23) 03/14→
2 Coupe (F22, F87) 10/12→
4 Convertible (F33, F83) 10/13→
4 Coupe (F32, F82) 07/13→
4 Gran Coupe (F36) 03/14→
5 (F10, F18) 01/09→10/16
5 Gran Turismo (F07) 01/09→02/17
5 Touring (F11) 11/09→
7 (F01, F02, F03, F04) 02/08→12/15

CHRYSLER
DELTA 08/11→

FIAT
BRAVO II (198_) 11/06→
BRAVO Van (198_) 03/08→06/14

HYUNDAI
i30 (FD) 10/07→11/11
i30 CW (FD) 10/07→06/12

KIA
CEE'D Hatchback (ED) 12/06→12/12
CEE'D SW (ED) 09/07→12/12
PRO CEE'D (ED) 02/08→02/13

LANCIA
DELTA III (844_) 08/08→08/14

MASERATI
GHIBLI (M157) 08/13→
LEVANTE Closed Off-Road Vehicle 06/16→

MERCEDES-BENZ
GLK-CLASS (X204) 06/08→

MG
MG 6 Hatchback 11/10→
MG 6 Saloon 11/10→

MINI
MINI CLUBMAN (R55) 10/06→06/14
MINI CLUBVAN (R55) 12/12→06/14

OPEL
ASTRA CLASSIC Estate (A04) 01/09→
ASTRA CLASSIC Hatchback (A04) 01/09→
ASTRA CLASSIC Saloon (A04) 01/09→
ASTRA H (L48) 01/04→05/14
ASTRA H Box (L70) 02/04→12/13
ASTRA H Estate (L35) 08/04→05/14
ASTRA H GTC (L08) 03/05→10/10
ASTRA H Saloon (L69) 02/07→05/14
ASTRA H TwinTop (L67) 09/05→10/10

PEUGEOT
308 II 09/13→
308 SW II 03/14→

RENAULT
CLIO II (BB0/1/2_, CB0/1/2_) 09/98→
MEGANE II (BM0/1_, CM0/1_) 07/01→10/12
MEGANE II Coupé-Cabriolet (EM0/1_) 09/03→03/10
MEGANE II Estate (KM0/1_) 08/03→08/12
MEGANE II Saloon (LM0/1_) 09/03→
MEGANE IV (B9A/M_) 11/15→
TALISMAN 06/15→
TALISMAN Grandtour 03/16→

SEAT
ATECA 04/16→

...AFL45

SEAT

IBIZA V (KJ1)		01/17→

SKODA

KAROQ (NU7)		07/17→
SUPERB (3V3)		03/15→
SUPERB (3T4)		03/08→05/15
SUPERB Estate (3V5)		03/15→
SUPERB Estate (3T5)		10/09→05/15

VW

CADDY ALLTRACK Box (SAA)		05/15→
CADDY ALLTRACK Estate (SAB)		05/15→
CADDY III Box (2KA, 2KH, 2CA, 2CH)		03/04→05/15
CADDY III Estate (2KB, 2KJ, 2CB, 2CJ)		03/04→05/15
CADDY IV Box (SAA, SAH)		05/15→
CADDY IV Estate (SAB, SAJ)		05/15→
GOLF ALLTRACK (BA5)		12/14→
GOLF VII (5G1, BE1)		08/12→
GOLF VII Estate (BA5)		04/13→
LUPO (6X1, 6E1)		09/98→07/05
POLO (AW1, BZ1)		06/17→
TOURAN (1T1, 1T2)		02/03→05/10
TOURAN (1T3)		05/10→05/15

AFL48

ALPINA

B3 (E90)		09/07→05/13
B3 (F30)		03/13→
B3 Estate (E91)		09/07→05/13
B3 Estate (F31)		03/13→
B5 (G30)		03/17→
B5 Touring (G31)		03/17→
B7 (G12)		02/16→
D3 (E90)		12/05→02/14
D3 (F30)		03/14→
D3 Estate (E91)		12/05→05/13
D3 Estate (F31)		03/14→
D5 (G30)		07/17→
D5 Touring (G31)		07/17→
XD3 (F25)		04/13→

AUDI

A3 (8P1)		05/03→08/12
A3 Convertible (8P7)		04/08→05/13
A3 Sportback (8PA)		09/04→03/13
Q2		06/16→

BMW

2 Active Tourer (F45)		11/13→
2 Gran Tourer (F46)		07/14→
3 (E90)		02/04→12/11
3 (F30, F35, F80)		03/11→
3 Gran Turismo (F34)		07/12→
3 Touring (E91)		12/04→06/12
3 Touring (F31)		07/11→
5 (G30, F90)		09/16→
5 Touring (G31)		03/17→
7 (G11, G12)		10/14→
X1 (E84)		03/09→06/15
X3 (F25)		09/10→
X5 (E70)		02/06→06/13
X6 (E71, E72)		06/07→06/14

CITROËN

DISPATCH Van/Box ('16)		04/16→
JUMPY		04/16→
JUMPY Platform/Chassis		09/16→
NEMO Box (AA_)		02/08→
NEMO Estate		04/09→
SPACETOURER		04/16→

DACIA

DUSTER		10/17→
LOGAN II		10/12→
LOGAN MCV II		02/13→
SANDERO II		10/12→

FIAT

FIORINO Box Body / Estate (225_)		01/07→
QUBO (225_)		02/08→

...AFL48

FIAT

STILO (192_)		10/01→11/10
STILO Multi Wagon (192_)		01/03→08/08
TALENTO Box		06/16→
TALENTO Kombi		06/16→
TALENTO Multicab		06/16→
TALENTO Platform/Chassis		06/16→

FORD

C-MAX (DM2)		02/07→09/10
FOCUS C-MAX		10/03→03/07
MONDEO IV (BA7)		03/07→01/15
MONDEO IV Saloon (BA7)		03/07→01/15
MONDEO IV Turnier (BA7)		03/07→01/15

HYUNDAI

EQUUS / CENTENNIAL ('09)		03/09→

INFINITI

Q30		11/15→
QX30		04/16→

JAGUAR

F-PACE (DC_)		09/15→
XF (CC9_)		03/08→04/15
XF SPORTBRAKE (CC9_)		09/12→04/14
XJ (NNA_)		10/09→

LAND ROVER

FREELANDER 2 (LF_)		10/06→10/14

MASERATI

QUATTROPORTE VI		11/12→

MERCEDES-BENZ

A-CLASS (W176)		06/12→
B-CLASS (W246, W242)		10/11→
CLA Coupe (C117)		01/13→
CLA Shooting Brake (X117)		01/15→
GLA-CLASS (X156)		12/13→
GLK-CLASS (X204)		06/08→

MINI

MINI CLUBMAN (R55)		10/06→06/14
MINI CLUBVAN (R55)		12/12→06/14
MINI COUNTRYMAN (R60)		01/10→10/16
MINI Coupe (R58)		12/10→05/15
MINI PACEMAN (R61)		03/12→09/16
MINI Roadster (R59)		01/11→04/15

NISSAN

NV300 Box (X82)		09/16→
NV300 Kombi (X82)		09/16→
NV300 Platform/Chassis (X82)		09/16→

OPEL

GRANDLAND X (A18)		06/17→
VIVARO Box		06/14→
VIVARO Combi		06/14→
VIVARO Platform/Chassis		06/14→

PEUGEOT

BIPPER (AA_)		02/08→
BIPPER Tepee		04/08→
EXPERT Box		04/16→
EXPERT Platform/Chassis		09/16→
TRAVELLER		04/16→

RENAULT

KOLEOS (HY_)		09/08→
LOGAN II		09/12→
LOGAN II Estate (K8_)		12/13→
SANDERO/STEPWAY II		11/13→
TRAFIC III Box		05/14→
TRAFIC III Bus		05/14→
TRAFIC III Platform/Chassis		05/14→

SEAT

CORDOBA (6L2)		09/02→11/09
IBIZA IV (6L1)		02/02→11/09

SKODA

OCTAVIA (1Z3)		02/04→06/13
OCTAVIA (5E3)		11/12→
OCTAVIA Combi (1Z5)		02/04→06/13
OCTAVIA Combi (5E5)		11/12→
YETI (5L)		05/09→12/17

TOYOTA

PROACE Box		02/16→

...AFL48

TOYOTA

PROACE Bus		02/16→

VOLVO

C70 II Convertible		03/06→12/13
V40 Hatchback		03/12→

VW

ARTEON (3H7)		04/17→
CC (358)		11/11→12/16
EOS (1F7, 1F8)		03/06→08/15
GOLF V (1K1)		10/03→02/09
GOLF V Variant (1K5)		06/07→07/09
GOLF VI (5K1)		10/08→11/13
GOLF VI Convertible (517)		03/11→
GOLF VI Variant (AJ5)		07/09→07/13
JETTA III (1K2)		08/05→10/10
JETTA IV (162, 163)		04/10→
LUPO (6X1, 6E1)		09/98→07/05
PASSAT (3C2)		03/05→11/10
PASSAT (3G2)		08/14→
PASSAT (362)		08/10→12/14
PASSAT (A32, A33)		01/11→
PASSAT ALLTRACK (3G5)		05/15→
PASSAT ALLTRACK (365)		01/12→12/14
PASSAT CC (357)		05/08→01/12
PASSAT Variant (3C5)		08/05→10/11
PASSAT Variant (3G5)		08/14→
PASSAT Variant (365)		08/10→12/14
POLO (9N_)		10/01→01/12
POLO Saloon (9A4)		09/02→
POLO Saloon (9N4)		09/02→12/10
SCIROCCO (137, 138)		05/08→11/17
T-ROC (A11)		11/17→

AFL48A

CITROËN

C5 I (DC_)		03/01→03/05
C5 I Break (DE_)		06/01→08/04
C5 II (RC_)		08/04→
C5 II Break (RE_)		09/04→

MAZDA

3 (BK)		10/03→12/09
3 Saloon (BK)		09/99→06/09

VW

BORA (1J2)		10/98→09/05
BORA Estate (1J6)		05/99→05/05
GOLF IV (1J1)		08/97→06/05
GOLF IV Van (1J1)		05/00→05/04
GOLF IV Variant (1J5)		05/99→06/06
POLO (9N_)		10/01→01/12
POLO Saloon (9A4)		09/02→
POLO Saloon (9N4)		09/02→12/10

AFL50

AUDI

A4 (8K2, B8)		11/07→12/15
A4 (8W2, B9)		05/15→
A4 Allroad (8KH, B8)		04/09→05/16
A4 Allroad (8WH, B9)		01/16→
A4 Avant (8K5, B8)		11/07→12/15
A4 Avant (8W5, B9)		08/15→
A5 (8T3)		06/07→01/17
A5 (F53)		06/16→
A5 Convertible (8F7)		03/09→01/17
A5 Convertible (F57)		11/16→
A5 Sportback (8TA)		09/09→01/17
A5 Sportback (F5A)		09/16→
A8 (4N2, 4N8)		06/17→
Q3 (8U)		06/11→
Q5 (8R)		11/08→
Q5 (FYB)		05/16→
Q7 (4M)		01/15→
TT (FV3)		07/14→
TT Roadster (FV9)		11/14→

BENTLEY

BENTAYGA		10/15→
MULSANNE (3Y_)		09/09→

BMW

1 (E81)		09/06→12/11

...AFL50

BMW

1 (E87)		02/03→01/13
1 Convertible (E88)		03/08→12/13
1 Coupe (E82)		10/06→10/13
X4 (F26)		05/13→03/18

FORD

TRANSIT Bus ('13)		08/13→
TRANSIT Platform/Chassis ('13)		08/13→
TRANSIT Van/Box ('13)		08/13→

HYUNDAI

ix55		09/06→

JEEP

RENEGADE Closed Off-Road Vehicle (BU)		07/14→

MERCEDES-BENZ

AMG GT / GT S (C190)		10/14→
AMG GT Roadster (R190)		11/16→
SLS AMG (C197)		03/10→
SLS AMG Convertible (A197)		06/11→

MINI

MINI CLUBMAN (F54)		11/14→
MINI COUNTRYMAN (R60)		01/10→10/16
MINI Coupe (R58)		12/10→05/15
MINI PACEMAN (R61)		03/12→09/16
MINI Roadster (R59)		01/11→04/15

PORSCHE

MACAN (95B)		02/14→
PANAMERA (971)		11/16→
PANAMERA Sport Turismo (971)		03/17→

RENAULT

CLIO II (BB0/1/2_, CB0/1/2_)		09/98→
TWINGO III		09/14→

SMART

FORFOUR Hatchback (453)		07/14→
FORTWO Convertible (453)		09/15→
FORTWO Coupe (453)		07/14→

VOLVO

C30		09/06→12/13
S40 II (MS)		01/04→12/12
S60 II		04/10→
S80 II (AS)		03/06→
S90 II		03/16→
V50 (MW)		12/03→12/12
V60		07/10→
V70 III (BW)		04/07→
V90 II		03/16→
XC40 (536)		10/17→
XC60		05/08→
XC70 II		04/07→
XC90 II		09/14→

AFL53

AUDI

A6 (4G2, C7, 4GC)		11/10→
A6 Allroad (4GH, 4GJ)		01/12→
A6 Avant (4G5, C7, 4GD)		05/11→
A8 (4H_)		11/09→
TT (8J3)		08/06→06/14
TT (8N3)		10/98→06/06
TT Roadster (8J9)		03/07→06/14
TT Roadster (8N9)		10/99→06/06

LAND ROVER

RANGE ROVER EVOQUE (LV_)		06/11→
RANGE ROVER EVOQUE Convertible (LV_)		11/15→

MAZDA

3 (BK)		10/03→12/09
3 Saloon (BK)		09/99→06/09

MERCEDES-BENZ

C-CLASS (W205)		07/13→
C-CLASS T-Model (S205)		09/14→
CITAN Box (415)		11/12→
CITAN Combi (415)		11/12→
CITAN Mixto (415)		11/12→
GL-CLASS (X164)		09/06→
M-CLASS (W164)		07/05→12/11

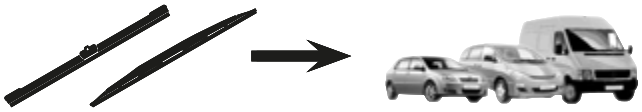

...AFL53

MERCEDES-BENZ
R-CLASS (W251, V251)		01/05→

PORSCHE
718 BOXSTER (982)		04/16→
718 CAYMAN (982)		04/16→
911 (991)		12/11→
911 Convertible (991)		03/12→
911 Targa (991)		05/14→
BOXSTER (981)		04/12→
BOXSTER Spyder (981)		07/15→
CAYMAN (981)		03/13→

RENAULT
KANGOO BE BOP (KW0/1_)		02/09→
KANGOO Express (FW0/1_)		02/08→
KANGOO / GRAND KANGOO (KW0/1_)		02/08→

SEAT
CORDOBA (6L2)		09/02→11/09
IBIZA IV (6L1)		02/02→11/09

SKODA
FABIA		12/06→12/14
FABIA Combi		10/07→12/14
ROOMSTER (5J)		03/06→05/15
ROOMSTER Praktik (5J)		03/07→05/15
SUPERB (3U4)		12/01→03/08

VW
BEETLE (5C1)		04/11→
BEETLE Convertible (5C7)		12/11→
BORA (1J2)		10/98→09/05
BORA Estate (1J6)		05/99→05/05
GOLF IV (1J1)		08/97→06/05
GOLF IV Van (1J1)		05/00→05/04
GOLF IV Variant (1J5)		05/99→06/06
PASSAT (3B3)		11/00→05/05
PASSAT Variant (3B6)		10/00→08/05
PHAETON (3D_)		04/02→03/16
POLO (9N_)		10/01→01/12
POLO Saloon (9A4)		09/02→
POLO Saloon (9N4)		09/02→12/10
TIGUAN (5N_)		09/07→

AFL53A

SKODA
SUPERB (3U4)		12/01→03/08

VW
PASSAT (3B3)		11/00→05/05
PASSAT Variant (3B6)		10/00→08/05

AFL55

ALFA ROMEO
147 (937_)		11/00→12/10
GT (937_)		11/03→09/10

AUDI
R8		07/15→
R8 Spyder		05/16→
TT (8J3)		08/06→06/14
TT Roadster (8J9)		03/07→06/14

BMW
1 (F20)		11/10→
1 (F21)		12/11→
2 Convertible (F23)		03/14→
2 Coupe (F22, F87)		10/12→

CITROËN
RELAY Bus		04/06→
RELAY Platform/Chassis		04/06→
RELAY Van/Box		04/06→

DACIA
DUSTER		10/17→
LOGAN II		10/12→
LOGAN MCV II		02/13→
SANDERO II		10/12→

FIAT
DUCATO Box (250_, 290_)		07/06→
DUCATO Bus (250_, 290_)		07/06→
DUCATO Platform/Chassis (250_, 290_)		07/06→

...AFL55

FIAT
MULTIPLA (186_)		04/99→06/10
STILO (192_)		10/01→11/10
STILO Multi Wagon (192_)		01/03→08/08

FORD
KA		08/14→
KA + Saloon		08/14→

JEEP
RENEGADE Closed Off-Road Vehicle (BU)		07/14→

MERCEDES-BENZ
C-CLASS (W205)		07/13→
C-CLASS T-Model (S205)		09/14→
GLK-CLASS (X204)		06/08→
S-CLASS (W222, V222, X222)		05/13→
S-CLASS Convertible (A217)		12/15→
S-CLASS Coupe (C217)		04/14→
SLC (R172)		01/16→
SLK (R171)		03/04→02/11
SLK (R172)		02/11→

MINI
MINI CLUBMAN (F54)		11/14→

OPEL
ASTRA CLASSIC Estate (A04)		01/09→
ASTRA CLASSIC Hatchback (A04)		01/09→
ASTRA CLASSIC Saloon (A04)		01/09→
ASTRA H (L48)		01/04→05/14
ASTRA H Box (L70)		02/04→12/13
ASTRA H Estate (L35)		08/04→05/14
ASTRA H GTC (L08)		03/05→10/10
ASTRA H Saloon (L69)		02/07→05/14
ASTRA H TwinTop (L67)		09/05→10/10

PEUGEOT
BOXER Box		04/06→
BOXER Bus		09/05→
BOXER Platform/Chassis		04/06→

RENAULT
GRAND SCÉNIC II (JM0/1_)		04/04→
LOGAN II		09/12→
LOGAN II Estate (K8_)		12/13→
SANDERO/STEPWAY II		11/13→
SCÉNIC II (JM0/1_)		06/03→

VOLVO
S60 I		07/00→04/10
S80 I (TS, XY)		05/98→02/08
V70 II (SW)		11/99→12/08
XC70 CROSS COUNTRY		10/97→10/07
XC90 I		06/02→12/14

VW
TIGUAN (AD1)		01/16→
TIGUAN ALLSPACE (BW2)		03/17→

AFL58

ALFA ROMEO
4C (960_)		03/13→
4C SPIDER (960_)		10/14→
159 (939_)		09/05→12/12
159 Sportwagon (939_)		03/06→12/12
BRERA (939_)		01/06→05/11
GIULIETTA (940_)		04/10→
SPIDER (939_)		03/06→03/11

ALPINA
B5 (E60)		03/05→09/10
B5 Estate (E61)		03/05→09/10
B6 Convertible (E64)		04/06→08/10
B6 Coupe (E63)		04/06→08/10

BMW
5 (E60)		12/01→03/10
5 Touring (E61)		03/04→12/10
6 (E63)		01/04→12/10
6 Convertible (E64)		03/04→12/10

FIAT
IDEA (350_)		12/03→

LANCIA
MUSA (350_)		10/04→09/12

MERCEDES-BENZ
CITAN Box (415)		11/12→

...AFL58

MERCEDES-BENZ
CITAN Combi (415)		11/12→
CITAN Mixto (415)		11/12→
GL-CLASS (X166)		07/12→
GLE (W166)		04/15→
GLE Coupe (C292)		03/15→
GLS (X166)		11/15→
M-CLASS (W166)		06/11→02/15

PORSCHE
718 BOXSTER (982)		04/16→
718 CAYMAN (982)		04/16→
911 (991)		12/11→
911 Convertible (991)		03/12→
911 Targa (991)		05/14→
BOXSTER (981)		04/12→
BOXSTER Spyder (981)		07/15→
CAYMAN (981)		03/13→

RENAULT
KANGOO BE BOP (KW0/1_)		02/09→
KANGOO Express (FW0/1_)		02/08→
KANGOO / GRAND KANGOO (KW0/1_)		02/08→

SAAB
9-3 (YS3F)		09/02→02/15
9-3 Convertible (YS3F)		08/03→02/15
9-3 Estate (YS3F)		03/05→02/15
9-3X		02/09→12/12
9-5 (YS3E)		09/97→12/09
9-5 Estate (YS3E)		10/98→12/09
9-7X		06/04→07/12

SMART
FORTWO Cabrio (451)		01/07→
FORTWO Coupe (451)		01/07→

AFL60

ABARTH
500 (312_)		01/08→
500C (312_)		09/09→

ALFA ROMEO
GIULIA (952_)		10/15→

ALPINA
B3 (E90)		09/07→05/13
B3 (F30)		03/13→
B3 Convertible (E93)		09/07→05/13
B3 Coupe (E92)		09/07→02/14
B3 Estate (E91)		09/07→05/13
B3 Estate (F31)		03/13→
B4 Convertible (F33)		03/14→
B4 Coupe (F32)		03/14→
B5 (E60)		03/05→09/10
B5 Estate (E61)		03/05→09/10
B6 Convertible (E64)		04/06→08/10
B6 Coupe (E63)		04/06→08/10
D3 (E90)		12/05→02/14
D3 (F30)		03/14→
D3 Coupe (E92)		07/08→05/13
D3 Estate (E91)		12/05→05/13
D3 Estate (F31)		03/14→
D4 Convertible (F33)		09/14→
D4 Coupe (F32)		09/14→

AUDI
A1 (8X1, 8XK)		05/10→
A1 Sportback (8XA, 8XF)		09/11→
A3 (8P1)		05/03→08/12
A3 Convertible (8P7)		04/08→05/13
A3 Sportback (8PA)		09/04→03/13
A4 (8K2, B8)		11/07→12/15
A4 (8W2, B9)		05/15→
A4 Allroad (8KH, B8)		04/09→05/16
A4 Allroad (8WH, B9)		01/16→
A4 Avant (8K5, B8)		11/07→12/15
A4 Avant (8W5, B9)		08/15→
A5 (8T3)		06/07→01/17
A5 (F53)		06/16→
A5 Convertible (8F7)		03/09→01/17
A5 Convertible (F57)		11/16→
A5 Sportback (8TA)		09/09→01/17

...AFL60

AUDI
A5 Sportback (F5A)		09/16→
Q2		06/16→
Q3 (8U)		06/11→
Q5 (8R)		11/08→
Q5 (FYB)		05/16→
TT (FV3)		07/14→
TT Roadster (FV9)		11/14→

BENTLEY
MULSANNE (3Y_)		09/09→

BMW
3 (E90)		02/04→12/11
3 (F30, F35, F80)		03/11→
3 Convertible (E93)		05/06→12/13
3 Coupe (E92)		01/05→12/13
3 Gran Turismo (F34)		07/12→
3 Touring (E91)		12/04→06/12
3 Touring (F31)		07/11→
4 Convertible (F33, F83)		10/13→
4 Coupe (F32, F82)		07/13→
4 Gran Coupe (F36)		03/14→
5 (E60)		12/01→03/10
5 Touring (E61)		03/04→12/10
6 (E63)		01/04→12/10
6 Convertible (E64)		03/04→12/10
X1 (E84)		03/09→06/15
X5 (E70)		02/06→06/13
X6 (E71, E72)		06/07→06/14

CHRYSLER
DELTA		08/11→
YPSILON		05/11→

CITROËN
C3 Picasso		02/09→
C-ELYSEE		11/12→
DS3		11/09→07/15
DS3 Convertible		01/13→07/15

FIAT
500 (312_)		10/07→
500 C (312_)		09/09→
500L (199_)		09/12→
BRAVO II (198_)		11/06→
BRAVO Van (198_)		03/08→06/14
CROMA (194_)		06/05→
DOBLO Box Body / Estate (263_)		02/10→
DOBLO MPV (263_)		11/09→
DOBLO Platform/Chassis (263_)		02/10→
MULTIPLA (186_)		04/99→06/10
PANDA (312_, 319_)		02/12→
PANDA VAN (312_)		02/12→

FORD
KA		01/08→
KA (RU8)		10/08→
KUGA I		03/08→

HYUNDAI
EQUUS / CENTENNIAL ('09)		03/09→
i30 (FD)		10/07→11/11
i30 CW (FD)		10/07→06/12
ix55		09/06→

INFINITI
Q30		11/15→
QX30		04/16→

JAGUAR
XF (CC9_)		03/08→04/15
XF SPORTBRAKE (CC9_)		09/12→04/14
XJ (NNA_)		10/09→

KIA
CEE'D Hatchback (ED)		12/06→12/12
CEE'D SW (ED)		09/07→12/12
PRO CEE'D (ED)		02/08→02/13

LANCIA
DELTA III (844_)		08/08→08/14
YPSILON (312_)		05/11→

LAND ROVER
FREELANDER 2 (LF_)		10/06→10/14
RANGE ROVER EVOQUE (LV_)		06/11→

...AFL60

LAND ROVER

RANGE ROVER EVOQUE Convertible (LV_)		11/15→

MERCEDES-BENZ

A-CLASS (W176)		06/12→
C-CLASS (W204)		01/07→01/14
C-CLASS Coupe (C204)		01/11→
C-CLASS T-Model (S204)		08/07→08/14
CLA Coupe (C117)		01/13→
CLA Shooting Brake (X117)		01/15→
CLS (C218)		01/11→
CLS Shooting Brake (X218)		10/12→
E-CLASS (W212)		01/09→
E-CLASS Convertible (A207)		01/10→
E-CLASS Coupe (C207)		01/09→
E-CLASS T-Model (S212)		08/09→
GLA-CLASS (X156)		12/13→
SPRINTER 3,5-t Box (906)		06/06→
SPRINTER 3,5-t Bus (906)		06/06→
SPRINTER 3,5-t Platform/Chassis (906)		06/06→
SPRINTER 3-t Box (906)		06/06→
SPRINTER 3-t Bus (906)		06/06→
SPRINTER 3-t Platform/Chassis (906)		06/06→
SPRINTER 4,6-t Box (906)		06/06→
SPRINTER 4,6-t Bus		06/06→
SPRINTER 4,6-t Platform/Chassis (906)		06/06→
SPRINTER 5-t Box (906)		06/06→
SPRINTER 5-t Bus		06/06→
SPRINTER 5-t Platform/Chassis (906)		06/06→

MG

MG 6 Hatchback		11/10→
MG 6 Saloon		11/10→

NISSAN

QASHQAI / QASHQAI +2 I (J10, JJ10)		12/06→12/13

OPEL

COMBO Box Body / Estate (X12)		02/12→
COMBO Platform/Chassis		08/12→
COMBO Tour (X12)		02/12→

PEUGEOT

301		11/12→
308 II		09/13→
308 SW II		03/14→

PORSCHE

MACAN (95B)		02/14→

RENAULT

CLIO Grandtour (KR0/1_)		02/08→
CLIO III (BR0/1, CR0/1)		01/05→
FLUENCE (L30_)		02/10→
KOLEOS (HY_)		09/08→
MEGANE CC (EZ0/1_)		06/10→
MEGANE II (BM0/1_, CM0/1_)		07/01→10/12
MEGANE II Coupé-Cabriolet (EM0/1_)		09/03→03/10
MEGANE II Estate (KM0/1_)		08/03→08/12
MEGANE II Saloon (LM0/1_)		09/03→
MEGANE III Coupe (DZ0/1_)		11/08→
MEGANE III Grandtour (KZ0/1)		11/08→
MEGANE III Hatchback (BZ0_)		11/08→
MEGANE IV (B9A/M_)		11/15→
TALISMAN		06/15→
TALISMAN Grandtour		03/16→
THALIA II (LU1/2_)		09/08→
TWINGO II (CN0_)		03/07→
WIND (E4M_)		07/10→

SEAT

IBIZA V (6J5, 6P1)		03/08→
IBIZA V SPORTCOUPE (6J1, 6P5)		07/08→
IBIZA V ST (6J8, 6P8)		03/10→
Mii (KF1_)		10/11→
TOLEDO IV (KG3)		07/12→

SKODA

CITIGO		10/11→

...AFL60

SKODA

FABIA (NJ3)		08/14→
FABIA Estate (NJ5)		10/14→
OCTAVIA (1Z3)		02/04→06/13
OCTAVIA (5E3)		11/12→
OCTAVIA Combi (1Z5)		02/04→06/13
OCTAVIA Combi (5E5)		11/12→
RAPID (NH3)		07/12→
RAPID Spaceback (NH1)		07/12→
SUPERB (3T4)		03/08→05/15
SUPERB Estate (3T5)		10/09→05/15
YETI (5L)		05/09→12/17

VOLVO

S60 I		07/00→04/10
S80 I (TS, XY)		05/98→02/08
V70 II (SW)		11/99→12/08
XC40 (536)		10/17→
XC70 CROSS COUNTRY		10/97→10/07
XC90 I		06/02→12/14

VW

AMAROK (2H_, S1B)		09/10→
AMAROK Platform/Chassis (S1B)		09/11→
CADDY ALLTRACK Box (SAA)		05/15→
CADDY ALLTRACK Estate (SAB)		05/15→
CADDY III Box (2KA, 2KH, 2CA, 2CH)		03/04→05/15
CADDY III Estate (2KB, 2KJ, 2CB, 2CJ)		03/04→05/15
CADDY IV Box (SAA, SAH)		05/15→
CADDY IV Estate (SAB, SAJ)		05/15→
CC (358)		11/11→12/16
CRAFTER 30-35 Bus (2E_)		04/06→12/16
CRAFTER 30-50 Box (2E_)		04/06→12/16
CRAFTER 30-50 Platform/Chassis (2F_)		04/06→12/16
EOS (1F7, 1F8)		03/06→08/15
GOLF V (1K1)		10/03→02/09
GOLF V Variant (1K5)		06/07→07/09
GOLF VI (5K1)		10/08→11/13
GOLF VI Convertible (517)		03/11→
GOLF VI Variant (AJ5)		07/09→07/13
JETTA III (1K2)		08/05→10/10
JETTA IV (162, 163)		04/10→
LOAD UP		12/14→
MULTIVAN V (7HM, 7HN, 7HF, 7EF, 7EM, 7EN)		04/03→08/15
MULTIVAN VI (SGF, SGM, SGN)		04/15→
PASSAT (3C2)		03/05→11/10
PASSAT (362)		08/10→12/14
PASSAT (A32, A33)		01/11→
PASSAT ALLTRACK (365)		01/12→12/14
PASSAT CC (357)		05/08→01/12
PASSAT Variant (3C5)		08/05→10/11
PASSAT Variant (365)		08/10→12/14
PHAETON (3D_)		04/02→03/16
POLO (6R, 6C)		06/09→
POLO Van (6R)		01/14→
SCIROCCO (137, 138)		05/08→11/17
TIGUAN (5N_)		09/07→
TOURAN (1T1, 1T2)		02/03→05/10
TOURAN (1T3)		05/10→05/15
TRANSPORTER V Box (7HA, 7HH, 7EA, 7EH)		04/03→08/15
TRANSPORTER V Bus (7HB, 7HJ, 7EB, 7EJ, 7EF, 7EG, 7HF, 7EC)		04/03→08/15
TRANSPORTER V Platform/Chassis (7JD, 7JE, 7JL, 7JY, 7JZ, 7FD		04/03→08/15
TRANSPORTER VI Box (SGA, SGH)		04/15→
TRANSPORTER VI Bus (SGB, SGG, SGJ)		04/15→
TRANSPORTER VI Platform/Chassis (SFD, SFE, SFL, SFZ)		04/15→
UP		08/11→
VENTO		01/10→

AFL63

IVECO

DAILY CITYS Bus		06/14→10/16

...AFL63

IVECO

DAILY VI Box Body / Estate		03/14→
DAILY VI Platform/Chassis		03/14→
DAILY LINE Bus		06/14→
DAILY TOURYS Bus		06/14→

MERCEDES-BENZ

S-CLASS (W222, V222, X222)		05/13→
S-CLASS Convertible (A217)		12/15→
S-CLASS Coupe (C217)		04/14→

PORSCHE

PANAMERA (971)		11/16→
PANAMERA Sport Turismo (971)		03/17→

RENAULT

ZOE		06/12→

VOLVO

S90 II		03/16→
V90 II		03/16→
XC90 II		09/14→

VW

TIGUAN (AD1)		01/16→
TIGUAN ALLSPACE (BW2)		03/17→

AFL65

ABARTH

GRANDE PUNTO (199_)		12/07→12/12
PUNTO (199_)		03/12→
PUNTO EVO (199_)		07/08→02/12

ALFA ROMEO

MITO (955_)		08/08→
STELVIO (949_)		12/16→

ALPINA

B5 (F10)		09/10→12/16
B5 (G30)		03/17→
B5 Estate (F11)		09/10→12/16
B5 Touring (G31)		03/17→
B6 Convertible (F12)		09/11→
B6 Coupe (F06)		04/14→
B6 Coupe (F13)		09/11→
B7 (F01, F02)		03/09→01/16
B7 (G12)		02/16→
D5 (F10)		09/11→12/16
D5 (G30)		07/17→
D5 Touring (F11)		09/11→12/16
D5 Touring (G31)		07/17→
XD3 (F25)		04/13→

AUDI

A3 (8V1, 8VK)		04/12→
A3 Convertible (8V7, 8VE)		10/13→
A3 Limousine (8VS, 8VM)		05/13→
A3 Sportback (8VA, 8VF)		09/12→
A6 (4G2, C7, 4GC)		11/10→
A6 Allroad (4GH, 4GJ)		01/12→
A6 Avant (4G5, C7, 4GD)		05/11→
Q7 (4L)		03/06→08/15

BMW

2 Active Tourer (F45)		11/13→
2 Gran Tourer (F46)		07/14→
5 (F10, F18)		01/09→10/16
5 (G30, F90)		09/16→
5 Gran Turismo (F07)		01/09→02/17
5 Touring (F11)		11/09→
5 Touring (G31)		03/17→
6 Convertible (F12)		03/11→
6 Coupe (F13)		11/10→
6 Gran Coupe (F06)		09/11→
7 (F01, F02, F03, F04)		02/08→12/15
7 (G11, G12)		10/14→
X1 (F48)		11/14→
X3 (F25)		09/10→
X4 (F26)		05/13→03/18

CHEVROLET

AVEO Hatchback (T300)		03/11→
AVEO Saloon (T300)		03/11→
TRAX		12/12→
VOLT		04/11→

CITROËN

BERLINGO (B9)		04/08→

...AFL65

CITROËN

BERLINGO Box (B9)		04/08→
BERLINGO Platform/Chassis (B9)		04/08→
C1 II		04/14→
C3 II		11/09→
C3 III (SX)		07/16→
C5 I (DC_)		03/01→03/05
C5 I Break (DE_)		06/01→08/04
C5 II (RC_)		08/04→
C5 II Break (RE_)		09/04→
DISPATCH Van/Box ('16)		04/16→
JUMPY		04/16→
JUMPY Platform/Chassis		09/16→
NEMO Box (AA_)		02/08→
NEMO Estate		04/09→
RELAY Bus		04/06→
RELAY Platform/Chassis		04/06→
RELAY Van/Box		04/06→
SPACETOURER		04/16→
XSARA PICASSO (N68)		12/99→

FIAT

500X (334_)		09/14→
DUCATO Box (250_, 290_)		07/06→
DUCATO Bus (250_, 290_)		07/06→
DUCATO Platform/Chassis (250_, 290_)		07/06→
FIORINO Box Body / Estate (225_)		01/07→
GRANDE PUNTO (199_)		10/05→
GRANDE PUNTO Van (199_)		10/05→06/13
LINEA (323_)		06/07→
PUNTO (199_)		03/12→
PUNTO EVO (199_)		07/08→
PUNTO EVO Van (199_)		03/09→02/12
PUNTO Van (199_)		02/06→
QUBO (225_)		02/08→
TALENTO Box		06/16→
TALENTO Kombi		06/16→
TALENTO Multicab		06/16→
TALENTO Platform/Chassis		06/16→
TIPO Estate (356_)		03/16→
TIPO Hatchback (356_)		03/16→
TIPO Saloon (356_)		10/15→

FORD

C-MAX (DM2)		02/07→09/10
FIESTA VI		06/08→
FIESTA VI Van		01/09→
FIESTA VII		01/17→
FIESTA Saloon		04/10→
FOCUS C-MAX		10/03→03/07
FOCUS II (DA_)		07/04→09/12
FOCUS II Convertible		10/06→09/10
FOCUS II Estate (DA_)		07/04→09/12
FOCUS II Saloon (DA_)		04/05→
MONDEO IV (BA7)		03/07→01/15
MONDEO IV Saloon (BA7)		03/07→01/15
MONDEO IV Turnier (BA7)		03/07→01/15

HYUNDAI

ix20 (JC)		11/10→

JAGUAR

F-PACE (DC_)		09/15→

KIA

VENGA (YN)		02/10→

LADA

XRAY		02/16→

LOTUS

EVORA		05/09→

MAN

TGE Box (UY_)		02/17→
TGE Platform/Chassis (UZ_)		11/16→

MASERATI

GHIBLI (M157)		08/13→
LEVANTE Closed Off-Road Vehicle		06/16→
QUATTROPORTE VI		11/12→

MERCEDES-BENZ

A-CLASS (W169)		09/04→06/12

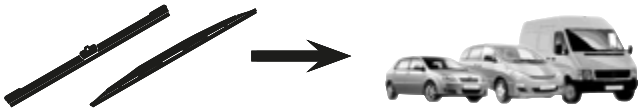

...AFL65

MERCEDES-BENZ

B-CLASS (W245)	03/05→11/11
B-CLASS (W246, W242)	10/11→
CLS (C219)	10/04→02/11
E-CLASS (W211)	03/02→03/09
E-CLASS T-Model (S211)	03/03→07/09
GL-CLASS (X166)	07/12→
GLE (W166)	04/15→
GLE Coupe (C292)	03/15→
GLS (X166)	11/15→
M-CLASS (W166)	06/11→02/15
SL (R230)	10/01→01/12
SLR (R199)	04/04→
SLR ROADSTER (R199)	10/06→
SPRINTER 3,5-t Box (906)	06/06→
SPRINTER 3,5-t Bus (906)	06/06→
SPRINTER 3,5-t Platform/Chassis (906)	06/06→
SPRINTER 3-t Box (906)	06/06→
SPRINTER 3-t Bus (906)	06/06→
SPRINTER 3-t Platform/Chassis (906)	06/06→
SPRINTER 4,6-t Box (906)	06/06→
SPRINTER 4,6-t Bus	06/06→
SPRINTER 4,6-t Platform/Chassis (906)	06/06→
SPRINTER 5-t Box (906)	06/06→
SPRINTER 5-t Bus	06/06→
SPRINTER 5-t Platform/Chassis (906)	06/06→
VANEO (414)	02/02→07/05

NISSAN

NV300 Box (X82)	09/16→
NV300 Kombi (X82)	09/16→
NV300 Platform/Chassis (X82)	09/16→
PULSAR Hatchback (C13)	08/12→

OPEL

ADAM	10/12→
AMPERA	11/11→
CORSA D	07/06→
CORSA D Van	07/06→
CORSA E	09/14→
CORSA E Van	09/14→
CROSSLAND X (P17)	03/17→
MOKKA	06/12→
VIVARO Box	06/14→
VIVARO Combi	06/14→
VIVARO Platform/Chassis	06/14→

PEUGEOT

108	05/14→
207 (WA_, WC_)	02/06→
207 CC (WD_)	02/07→
207 Saloon	12/07→
207 SW (WK_)	02/07→
207 Van	04/07→
208	03/12→
208 Box	10/12→
508	11/10→
508 SW	11/10→
2008	03/13→
BIPPER (AA_)	02/08→
BIPPER Tepee	04/08→
BOXER Box	04/06→
BOXER Bus	09/05→
BOXER Platform/Chassis	04/06→
EXPERT Box	04/16→
EXPERT Platform/Chassis	09/16→
PARTNER Box	04/08→
PARTNER Platform/Chassis	01/09→
PARTNER Tepee	04/08→
RCZ	03/10→
TRAVELLER	04/16→

PORSCHE

CAYENNE (9PA)	09/02→09/10
CAYENNE (92A)	06/10→

RENAULT

CAPTUR	06/13→

...AFL65

RENAULT

CLIO Grandtour IV	01/13→
CLIO IV	11/12→
CLIO IV Box	01/14→
GRAND SCÉNIC II (JM0/1_)	04/04→
LAGUNA Coupe (DT0/1)	09/08→
LAGUNA III (BT0/1)	10/07→
LAGUNA III Grandtour (KT0/1)	10/07→
SCÉNIC II (JM0/1_)	06/03→
TRAFIC III Box	05/14→
TRAFIC III Bus	05/14→
TRAFIC III Platform/Chassis	05/14→

SEAT

ATECA	04/16→
IBIZA V (KJ1)	01/17→
LEON (1P1)	05/05→12/12
LEON (5F1)	09/12→
LEON SC (5F5)	01/13→
LEON ST (5F8)	08/13→

SKODA

KAROQ (NU7)	07/17→
SUPERB (3V3)	03/15→
SUPERB Estate (3V5)	03/15→

TOYOTA

AYGO (PAB4_, KGB4_)	05/14→
PROACE Box	02/16→
PROACE Bus	02/16→

VOLVO

C30	09/06→12/13
C70 II Convertible	03/06→12/13
S40 II (MS)	01/04→12/12
S60 II	04/10→
S80 II (AS)	03/06→
V40 Hatchback	03/12→
V50 (MW)	12/03→12/12
V60	07/10→
V70 III (BW)	04/07→
XC60	05/08→
XC70 II	04/07→

VW

ARTEON (3H7)	04/17→
CRAFTER 30-35 Bus (2E_)	04/06→12/16
CRAFTER 30-50 Box (2E_)	04/06→12/16
CRAFTER 30-50 Platform/Chassis (2F_)	04/06→12/16
CRAFTER Box (SY_)	09/16→
CRAFTER Bus (SY_)	09/16→
CRAFTER Platform/Chassis (SZ_)	11/16→
GOLF ALLTRACK (BA5)	12/14→
GOLF VII (5G1, BE1)	08/12→
GOLF VII Estate (BA5)	04/13→
PASSAT (3G2)	08/14→
PASSAT ALLTRACK (3G5)	05/15→
PASSAT Variant (3G5)	08/14→
POLO (AW1, BZ1)	06/17→
TOUAREG (7LA, 7L6, 7L7)	10/02→05/10
TOUAREG (7P5)	01/10→
T-ROC (A11)	11/17→

AFL68

AUDI

A8 (4H_)	11/09→
A8 (4N2, 4N8)	06/17→
Q7 (4M)	01/15→

BENTLEY

BENTAYGA	10/15→

MERCEDES-BENZ

S-CLASS (W220)	10/98→08/05
S-CLASS (W221)	09/05→12/13
S-CLASS Coupe (C215)	03/99→08/06
S-CLASS Coupe (C216)	05/06→12/13

OPEL

ASTRA GTC J	10/11→
ASTRA J	12/09→
ASTRA J Saloon	06/12→
ASTRA J Sports Tourer	10/10→

...AFL68

OPEL

CASCADA (W13)	03/13→
MERIVA B	06/10→

AFL70

BMW

i3 (I01)	08/13→
i8 (I12)	03/14→
i8 Roadster (I15)	03/18→

CITROËN

C4 Coupe (LA_)	11/04→07/11
C4 I (LC_)	11/04→07/11
C4 Saloon	07/06→
C5 III (RD_)	02/08→
C5 III Break (TD_)	02/08→
C6 (TD_)	09/05→

FORD

GALAXY (WGR)	03/95→05/06
KUGA II (DM2)	05/12→
KUGA II Van	05/12→
MONDEO V Hatchback	09/14→
MONDEO V Saloon	09/12→
MONDEO V Turnier	09/14→
TOURNEO COURIER Kombi	02/14→
TOURNEO CUSTOM Bus	04/12→
TRANSIT COURIER Box	02/14→
TRANSIT COURIER Kombi	02/14→
TRANSIT CUSTOM Bus	04/12→

JAGUAR

XE (JA_)	03/15→
XF (JB_)	05/15→
XF SPORTBRAKE (X260)	07/17→

MAN

TGE Box (UY_)	02/17→
TGE Platform/Chassis (UZ_)	11/16→

MERCEDES-BENZ

GL-CLASS (X164)	09/06→
M-CLASS (W164)	07/05→12/11
R-CLASS (W251, V251)	01/05→
VIANO (W639)	09/03→
VITO Bus (W639)	09/03→
VITO / MIXTO Box (W639)	09/03→

OPEL

ASTRA K	06/15→
ASTRA K Sports Tourer	11/15→
GRANDLAND X (A18)	06/17→
ZAFIRA B (A05)	07/05→
ZAFIRA B Van	07/05→

PEUGEOT

307 (3A/C)	08/00→
307 Break (3E)	03/02→12/09
307 CC (3B)	10/03→
307 SW (3H)	03/02→12/09
407 (6D_)	05/04→
407 Coupe (6C_)	10/05→
407 SW (6E_)	05/04→
3008 SUV (M_)	05/16→
5008 II	12/16→

RENAULT

MODUS / GRAND MODUS (F/JP0_)	09/04→

SEAT

ALHAMBRA (7V8, 7V9)	04/96→03/10
ALHAMBRA (710, 711)	06/10→

TESLA

MODEL S	09/12→

VW

CRAFTER Box (SY_)	09/16→
CRAFTER Bus (SY_)	09/16→
CRAFTER Platform/Chassis (SZ_)	11/16→
GOLF PLUS (5M1, 521)	01/05→12/13
GOLF SPORTSVAN (AM1)	02/14→
SHARAN (7M8, 7M9, 7M6)	05/95→03/10
SHARAN (7N1, 7N2)	05/10→
TOURAN (1T1, 1T2)	02/03→05/10
TOURAN (5T1)	05/15→

AFL75

AUDI

A2 (8Z0)	02/00→08/05

CITROËN

C4 II (B7)	11/09→
DS4	04/11→07/15
DS5	11/11→07/15

FORD

B-MAX (JK)	10/12→
B-MAX Van	10/12→
C-MAX II (DXA/CB7, DXA/CEU)	04/10→
C-MAX II Van	12/10→
FOCUS III	07/10→
FOCUS III Box Body / Estate	02/12→
FOCUS III Box Body / Hatchback	01/11→
FOCUS III Saloon	07/10→
FOCUS III Turnier	07/10→
FOCUS III Van	02/12→
GALAXY	01/15→
GALAXY (WA6)	05/06→06/15
GRAND C-MAX (DXA/CB7, DXA/CEU)	12/10→
GRAND C-MAX Van	12/10→
S-MAX	01/15→
S-MAX (WA6)	05/06→12/14
TOURNEO CONNECT / GRAND TOURNEO CONNECT Kombi	09/13→
TOURNEO CUSTOM Bus	04/12→
TRANSIT Bus ('13)	08/13→
TRANSIT CONNECT Box	02/13→
TRANSIT CONNECT Kombi	02/13→
TRANSIT CUSTOM Box	04/12→
TRANSIT CUSTOM Bus	04/12→
TRANSIT Platform/Chassis ('13)	08/13→
TRANSIT Van/Box ('13)	08/13→

PEUGEOT

308 (4A_, 4C_)	09/07→
308 CC	02/09→
308 SW	09/07→

RENAULT

ESPACE IV (JK0/1_)	11/02→
ESPACE V	02/15→
GRAND SCÉNIC III (JZ0/1_)	02/09→
SCÉNIC III (JZ0/1_)	02/09→
VEL SATIS (BJ0_)	06/02→

AFL80

CITROËN

C4 Grand Picasso I (UA_)	10/06→
C4 Grand Picasso II	09/13→
C4 Picasso I (UD_)	10/06→10/13
C4 Picasso II	02/13→

OPEL

ZAFIRA TOURER C (P12)	10/11→

PEUGEOT

3008	06/09→12/16
5008	06/09→

RENAULT

GRAND SCÉNIC IV (R9_)	09/16→
SCÉNIC IV (J9_)	09/16→

AFL4850B

MINI

MINI COUNTRYMAN (R60)	01/10→10/16
MINI Coupe (R58)	12/10→05/15
MINI PACEMAN (R61)	03/12→09/16
MINI Roadster (R59)	01/11→04/15

AFL5035G

RENAULT

TWINGO III	09/14→

SMART

FORFOUR Hatchback (453)	07/14→
FORTWO Convertible (453)	09/15→
FORTWO Coupe (453)	07/14→

AFL5050B

BMW

1 (E81)	09/06→12/11

...AFL5050B

BMW
1 (E87)	02/03→01/13
1 Convertible (E88)	03/08→12/13
1 Coupe (E82)	10/06→10/13

AFL5050L

BMW
Z3 (E36)	10/95→01/03
Z3 Coupe (E36)	04/97→06/03

DACIA
DUSTER	04/10→
DUSTER Box	04/11→
LOGAN (LS_)	09/04→
LOGAN EXPRESS (FS_)	03/09→
LOGAN MCV (KS_)	02/07→
LOGAN Pickup (US_)	03/08→
SANDERO	06/08→

JEEP
GRAND CHEROKEE I (ZJ)	09/91→04/99

LADA
LARGUS Estate	03/12→

MITSUBISHI
PAJERO / SHOGUN (III) (V7_W, V6_W)	01/99→01/07
PAJERO / SHOGUN Soft Top (III)	04/00→12/06
PAJERO / SHOGUN SPORT I (K90)	07/96→

NISSAN
CUBE (Z11)	01/03→09/05
CUBE (Z12)	09/07→
KUBISTAR (X76)	08/03→10/09
KUBISTAR Box (X80)	08/03→

RENAULT
CLIO I (B/C57_, 5/357_)	05/90→09/98
DUSTER (HS_)	01/11→
KANGOO (KC0/1_)	08/97→
KANGOO Express (FC0/1_)	08/97→
LOGAN EXPRESS (US_)	04/07→
LOGAN I (LS_)	09/04→
LOGAN I Estate (KS_)	04/07→
SANDERO/STEPWAY I	11/07→

SSANGYONG
REXTON (GAB_)	04/02→
REXTON W	07/12→

VOLVO
740 (744)	04/83→12/92
740 Kombi (745)	08/84→12/92
760 (704, 764)	08/81→07/92
780	04/86→11/90
940 (944)	08/90→03/95
940 II (944)	08/94→12/98
940 II Estate (945)	08/94→10/98
940 Kombi (945)	08/90→10/95

AFL5345L

CITROËN
C3 Pluriel (HB_)	05/03→

DAIHATSU
TERIOS (J2_)	11/05→

FIAT
DOBLO MPV (119_, 223_)	03/01→
FULLBACK Pickup (KT_)	01/16→
PUNTO (188_)	09/99→07/12
PUNTO Van (188_)	02/00→10/09

HYUNDAI
COUPE (GK)	01/01→11/09
COUPE (RD)	06/96→04/02

KIA
RIO Estate (DC)	07/00→02/05
RIO Saloon (DC_)	07/00→02/05

MAZDA
CX-3 (DK)	01/15→

MITSUBISHI
GALANT VI (EA_)	09/96→10/04
GALANT VI Estate (EA_)	09/96→10/03
L 200 (KB_T, KA_T)	01/04→12/15

...AFL5345L

MITSUBISHI
L 200 / TRITON (KJ_, KK_, KL_)	11/14→
SPACE STAR MPV (DG_A)	06/98→12/04

NISSAN
MICRA C+C III (K12)	08/05→
MICRA III (K12)	03/02→06/10

RENAULT
CLIO II (BB0/1/2_, CB0/1/2_)	09/98→
CLIO II Box (SB0/1/2_)	09/98→
THALIA I (LB0/1/2_)	02/98→

SUBARU
IMPREZA Coupe (GFC)	01/93→12/00
IMPREZA Estate	07/07→12/12
IMPREZA Estate (GF)	08/92→12/00
IMPREZA Saloon (GC)	08/92→09/01

SUZUKI
SWIFT III (MZ, EZ)	02/05→

TOYOTA
AVENSIS (_T22_, ZZT22_)	09/97→02/03
AVENSIS Liftback (_T22_, ST22_)	09/97→02/03
AVENSIS Station Wagon (_T22_, ZZT22_)	09/97→02/03
IQ (KPJ1_, NGJ1_, KGJ1_, NUJ1_)	11/08→
MATRIX (ZZE13_)	01/02→12/07

VW
CADDY II Box (9K9A)	11/95→01/04
CADDY II Estate (9K9B)	11/95→01/04
CADDY II Pickup (9U7)	06/96→12/00
POLO CLASSIC (6KV2)	11/95→07/06
POLO Variant (6KV5)	04/97→09/01
POLO VIVO Hatchback	02/10→
POLO VIVO Saloon	02/10→

AFL5348A

SEAT
CORDOBA (6L2)	09/02→11/09
IBIZA IV (6L1)	02/02→11/09

VW
POLO (9N_)	10/01→01/12
POLO Saloon (9A4)	09/02→
POLO Saloon (9N4)	09/02→12/10

AFL5348L

ALFA ROMEO
166 (936_)	09/98→06/07

AUDI
A3 (8L1)	09/96→06/03

CHEVROLET
LACETTI (J200)	03/03→
LACETTI Estate (J200)	03/05→
LACETTI Saloon	03/03→03/13

HONDA
CIVIC VII Coupe (EM2)	02/01→12/05

KIA
SHUMA (FB)	09/96→12/01
SHUMA II (FB)	05/01→08/04
SHUMA II Saloon (FB)	05/01→05/04
SHUMA Saloon (FB)	03/96→10/01

MAZDA
323 F VI (BJ)	09/98→05/04
323 S VI (BJ)	05/98→05/04

MITSUBISHI
COLT V (CJ_, CP_)	09/95→09/03
L 200 (KB_T, KA_T)	01/04→12/15
LANCER VI (CJ-CP_)	09/95→08/03
MIRAGE Hatchback (CJ_A)	09/95→07/03
MIRAGE Saloon (CK_A)	09/95→07/03

NISSAN
ALMERA I (N15)	07/95→07/00
ALMERA I Hatchback (N15)	07/95→01/01

SEAT
CORDOBA (6K1, 6K2)	02/93→10/02
CORDOBA (6K2)	06/99→10/02

...AFL5348L

SEAT
CORDOBA (6L2)	09/02→11/09
CORDOBA Vario (6K5)	06/99→12/02
CORDOBA Vario (6K5)	08/96→12/02
IBIZA II (6K1)	03/93→02/02
IBIZA III (6K1)	08/99→02/02
LEON (1M1)	11/99→06/06
TOLEDO II (1M2)	10/98→05/06

SKODA
FABIA (6Y2)	08/99→03/08
FABIA Combi (6Y5)	04/00→12/07
FABIA Praktik	07/01→12/07
FABIA Saloon (6Y3)	10/99→12/07
OCTAVIA (1U2)	09/96→12/10
OCTAVIA Combi (1U5)	07/98→12/10
SUPERB (3U4)	12/01→03/08

SSANGYONG
ACTYON I	11/05→
ACTYON II	08/12→
ACTYON SPORTS I (QJ)	11/05→
ACTYON SPORTS II	10/12→

SUBARU
FORESTER (SF)	03/97→09/02
FORESTER (SG)	06/02→10/12
LEGACY II (BD, BG)	03/94→10/99
LEGACY II Estate (BD, BG)	02/94→12/99
LEGACY OUTBACK (BG)	01/96→12/99

SUZUKI
IGNIS III (MF)	10/16→

TOYOTA
CAMRY (_CV2_, _XV2_)	08/96→11/01
CELICA (ST20_, AT20_)	09/93→11/99
CELICA Convertible (AT20_, ST20_)	11/93→08/99
HILUX III Pickup (KUN_, TGN_, LAN_, GGN_)	08/04→

VW
BORA (1J2)	10/98→09/05
BORA Estate (1J6)	05/99→05/05
GOLF III (1H1)	08/91→07/98
GOLF III Cabriolet (1E7)	07/93→05/98
GOLF III Variant (1H5)	07/93→04/99
GOLF IV (1J1)	08/97→06/05
GOLF IV Cabriolet (1E7)	06/98→06/02
GOLF IV Variant (1J5)	05/99→06/06
POLO (9N_)	10/01→01/12
VENTO (1H2)	11/91→09/98

AFL5350L

ALPINA
B3 (E36)	04/93→05/99
B3 Convertible (E36)	04/93→03/99
B3 Coupe (E36)	04/96→03/99
B3 Estate (E36)	04/93→03/99
B6 (E36)	03/92→07/93
B8 (E36)	01/95→03/98
B8 Convertible (E36)	01/95→03/98
B8 Coupe (E36)	01/95→03/98
B8 Estate (E36)	01/95→03/98
ROADSTER S (Z4)	07/03→12/05

BMW
3 (E36)	09/90→02/98
3 Compact (E36)	03/94→08/00
3 Convertible (E36)	03/93→04/99
3 Coupe (E36)	03/92→04/99
3 Touring (E36)	01/95→10/99
Z4 (E85)	02/03→12/09
Z4 Coupe (E86)	03/06→01/09

FORD
MAVERICK (UDS, UNS)	02/93→04/98
MONDEO I (GBP)	02/93→08/96
MONDEO I Estate (BNP)	01/93→08/96
MONDEO I Saloon (GBP)	02/93→08/96
MONDEO II (BAP)	08/96→09/00
MONDEO II Estate (BNP)	08/96→09/00
MONDEO II Saloon (BFP)	08/96→09/00

HONDA
CR-V II (RD_)	09/01→12/06

...AFL5350L

MITSUBISHI
3000 GT Coupe (Z16A)	06/89→08/00
CARISMA (DA_)	07/95→06/06
CARISMA Saloon (DA_)	09/96→06/06
COLT V (CJ_, CP_)	09/95→09/03

NISSAN
200 SX (S14)	10/93→12/99
MAXIMA III (J30)	10/88→02/95
PRIMERA (P11)	06/96→12/01
PRIMERA Hatchback (P11)	06/96→07/02
PRIMERA Traveller (WP11)	06/96→01/02
TERRANO II (R20)	10/92→09/07

VOLVO
S40 I (VS)	07/95→06/04
V40 Estate (VW)	07/95→06/04

AFL5353A

SKODA
FABIA	12/06→12/14
FABIA Combi	10/07→12/14
ROOMSTER (5J)	03/06→05/15
ROOMSTER Praktik (5J)	03/07→05/15

AFL5353F

AUDI
TT (8N3)	10/98→06/06
TT Roadster (8N9)	10/99→06/06

VW
BEETLE (5C1)	04/11→
BEETLE Convertible (5C7)	12/11→

AFL5353L

AUDI
80 (8C, B4)	09/91→12/94
80 (89, 89Q, 8A, B3)	06/86→10/91
80 Avant (8C, B4)	09/91→01/96
90 (81, 85, B2)	08/84→03/87
90 (89, 89Q, 8A, B3)	04/87→09/91
100 (44, 44Q, C3)	08/82→07/91
100 Avant (44, 44Q, C3)	08/82→11/90
200 (44, 44Q)	06/83→12/91
200 Avant (44, 44Q)	09/83→12/91
A3 (8L1)	09/96→06/03
A4 (8D2, B5)	11/94→09/01
A4 Avant (8D5, B5)	11/94→09/01
CABRIOLET (8G7, B4)	05/91→08/00
COUPE (81, 85)	07/80→10/88
COUPE (89, 8B)	10/88→12/96
QUATTRO (85)	07/80→07/91
TT (8N3)	10/98→06/06
TT Roadster (8N9)	10/99→06/06
V8 (44_, 4C_)	10/88→02/94

JEEP
GRAND CHEROKEE II (WJ, WG)	09/98→09/05
GRAND CHEROKEE III (WH, WK)	10/04→10/11
GRAND CHEROKEE IV (WK, WK2)	06/10→
PATRIOT (MK74)	02/07→

SAAB
9-3 (YS3D)	02/98→08/03
9-3 Cabriolet (YS3D)	02/98→08/03
900 II	07/93→04/99
900 II Convertible	09/93→04/99
900 II Coupe	12/93→04/99
9000	04/85→12/98
9000 Hatchback	09/84→12/98

VOLVO
440 K (445)	08/88→12/96
460 L (464)	09/88→12/96
480 E	04/86→07/96
760 (704, 764)	08/81→07/92
760 Kombi (704, 765)	01/82→07/92
850 (LS)	06/91→10/97
850 Estate (LW)	04/92→10/97
960 (964)	08/90→07/94
960 Kombi (965)	08/90→07/94
C70 I Convertible	03/98→10/05
C70 I Coupe	03/97→09/02

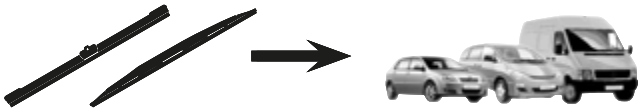

...AFL5353L

VOLVO

S70 (LS)	11/96→11/00
S90	11/96→12/98
V70 I (LV)	12/95→12/00
V90 Estate	11/96→12/98

AFL5535L

CHEVROLET

MATIZ (M200, M250)	03/05→

HYUNDAI

GETZ (TB)	08/02→12/10

MITSUBISHI

MIRAGE Saloon (A10_)	07/13→
MIRAGE / SPACE STAR Hatchback (A0_A, A05A, LA)	01/12→
SPACE STAR Hatchback (A0_A)	05/12→
SPACE WAGON (D0_V/W)	01/84→01/92

NISSAN

JUKE (F15)	06/10→
PIXO (UA0)	03/09→

SUZUKI

ALTO (HA25, HA35)	01/09→

AFL5540L

CHEVROLET

AVEO Hatchback (T250, T255)	06/06→
AVEO Saloon (T200)	01/03→12/08
AVEO Saloon (T250, T255)	03/05→
KALOS	03/05→
KALOS Saloon	03/05→
TRAILBLAZER (KC_)	09/01→12/09

DACIA

DOKKER	11/12→
DOKKER Express	12/12→
LODGY	03/12→

FIAT

IDEA (350_)	12/03→
PANDA (169_)	09/03→
PANDA Van (169_)	03/04→

HYUNDAI

ACCENT III (MC)	11/05→12/10
ACCENT III Saloon (MC)	11/05→11/10
i10 (IA)	08/13→
i10 (PA)	10/07→02/16
i10 Saloon	12/13→
MATRIX (FC)	06/01→08/10

KIA

PICANTO (BA)	04/04→
PICANTO (TA)	05/11→
RIO II (JB)	03/05→
RIO II Saloon (JB)	03/05→

MAZDA

2 (DL, DJ)	11/14→
2 Saloon (DL)	01/15→

OPEL

AGILA (B) (H08)	04/08→
GT Convertible	06/07→12/11

SUBARU

IMPREZA Hatchback	10/00→12/07

TOYOTA

HILUX VIII Platform/Chassis (_N1_)	05/15→
YARIS VERSO (_NLP2_, _NCP2_)	08/99→09/05

AFL5540M

DACIA

DOKKER	11/12→
DOKKER Express	12/12→
LODGY	03/12→

AFL5545B

BMW

1 (F20)	11/10→
1 (F21)	12/11→
2 Convertible (F23)	03/14→
2 Coupe (F22, F87)	10/12→

AFL5545E

MERCEDES-BENZ

GLK-CLASS (X204)	06/08→

OPEL

ASTRA CLASSIC Estate (A04)	01/09→
ASTRA CLASSIC Hatchback (A04)	01/09→
ASTRA CLASSIC Saloon (A04)	01/09→
ASTRA H (L48)	01/04→05/14
ASTRA H Box (L70)	02/04→12/13
ASTRA H Estate (L35)	08/04→05/14
ASTRA H GTC (L08)	03/05→10/10
ASTRA H Saloon (L69)	02/07→05/14
ASTRA H TwinTop (L67)	09/05→10/10

AFL5548G

DACIA

DUSTER	10/17→
LOGAN II	10/12→
LOGAN MCV II	02/13→
SANDERO II	10/12→

FIAT

STILO (192_)	10/01→11/10
STILO Multi Wagon (192_)	01/03→08/08

RENAULT

LOGAN II	09/12→
LOGAN II Estate (K8_)	12/13→
SANDERO/STEPWAY II	11/13→

AFL5548L

FIAT

STILO (192_)	10/01→11/10
STILO Multi Wagon (192_)	01/03→08/08

FORD

FOCUS (DAW, DBW)	10/98→12/07
FOCUS Estate (DNW)	02/99→12/07
FOCUS Saloon (DFW)	02/99→12/07

HYUNDAI

SONATA IV (EF)	03/98→12/05

JAGUAR

X-TYPE (CF1_)	03/01→11/09
X-TYPE Estate (CF1_)	09/03→12/09

LEXUS

IS I (JCE1_, GXE1_)	04/99→07/05
IS SportCross	10/01→10/05

SSANGYONG

KYRON	05/05→

AFL5550A

JEEP

RENEGADE Closed Off-Road Vehicle (BU)	07/14→

MINI

MINI CLUBMAN (F54)	11/14→

AFL5550L

BMW

X3 (E83)	01/03→12/11
Z4 ROADSTER (E89)	05/09→

DACIA

LOGAN II	10/12→
LOGAN MCV II	02/13→
SANDERO II	10/12→

FORD

COUGAR (EC_)	08/98→12/01
MONDEO III (B5Y)	10/00→03/07
MONDEO III Estate (BWY)	10/00→03/07
MONDEO III Saloon (B4Y)	10/00→03/07

HYUNDAI

SANTA FÉ I (SM)	11/00→03/06
TERRACAN (HP)	06/01→03/08
XG (XG)	12/98→12/05
XG Saloon	09/00→12/05

INFINITI

FX ('02)	09/02→12/08
I30	01/97→
QX4	01/97→

KIA

MAGENTIS (GD)	05/01→

...AFL5550L

LEXUS

IS C (GSE2_)	04/09→

MITSUBISHI

PAJERO / SHOGUN (IV) (V8_W, V9_W)	11/06→
PAJERO / SHOGUN Box (IV) (V90, V80)	11/06→

RENAULT

LOGAN II	09/12→
LOGAN II Estate (K8_)	12/13→
MEGANE I (BA0/1_)	08/95→12/04
MEGANE I Cabriolet (EA0/1_)	10/96→08/03
MEGANE I Classic (LA0/1_)	09/96→08/08
MEGANE I Coach (DA0/1_)	03/96→08/03
MEGANE I Grandtour (KA0/1_)	03/99→08/03
SANDERO/STEPWAY II	11/13→

SUBARU

BRZ	06/12→
LEGACY III (BE, BH)	10/98→08/03
LEGACY III Estate (BE, BH)	10/98→08/03
OUTBACK (BE, BH)	10/98→08/03
SVX (CX)	09/92→12/97

TOYOTA

GT 86 Coupe (ZN6_)	03/12→

AFL5553B

AUDI

TT (8J3)	08/06→06/14
TT Roadster (8J9)	03/07→06/14

MERCEDES-BENZ

C-CLASS (W205)	07/13→
C-CLASS T-Model (S205)	09/14→

AFL5555B

MERCEDES-BENZ

SLC (R172)	01/16→
SLK (R171)	03/04→02/11
SLK (R172)	02/11→

AFL5555J

AUDI

A6 (4F2, C6)	05/04→03/11
A6 Allroad (4FH, C6)	05/06→08/11
A6 Avant (4F5, C6)	03/05→08/11

AFL5555K

AUDI

A4 (8E2, B6)	11/00→12/04
A4 (8EC, B7)	11/04→06/08
A4 Avant (8E5, B6)	04/01→12/04
A4 Avant (8ED, B7)	11/04→06/08
A4 Convertible (8H7, B6, 8HE, B7)	04/02→03/09
A6 (4B2, C5)	01/97→01/05
A6 Avant (4B5, C5)	11/97→01/05
ALLROAD (4BH, C5)	05/00→08/05

MERCEDES-BENZ

C-CLASS (W203)	05/00→08/07
C-CLASS Coupe (CL203)	03/01→06/11
C-CLASS T-Model (S203)	03/01→08/07
CLC-CLASS (CL203)	05/08→06/11
CLK (C209)	06/02→05/09
CLK Convertible (A209)	02/03→03/10

SEAT

EXEO (3R2)	12/08→
EXEO ST (3R5)	05/09→

AFL5845E

ALFA ROMEO

159 (939_)	09/05→12/12
159 Sportwagon (939_)	03/06→12/12
BRERA (939_)	01/06→05/11
GIULIETTA (940_)	04/10→
SPIDER (939_)	03/06→03/11

AFL5853G

MERCEDES-BENZ

CITAN Box (415)	11/12→

...AFL5853G

MERCEDES-BENZ

CITAN Combi (415)	11/12→
CITAN Mixto (415)	11/12→

RENAULT

KANGOO BE BOP (KW0/1_)	02/09→
KANGOO Express (FW0/1_)	02/08→
KANGOO / GRAND KANGOO (KW0/1_)	02/08→

AFL5853M

MINI

MINI COUNTRYMAN (F60)	10/16→

AFL6035A

ABARTH

500 (312_)	01/08→
500C (312_)	09/09→

FIAT

500 (312_)	10/07→
500 C (312_)	09/09→

FORD

KA	01/08→
KA (RU8)	10/08→

AFL6035L

CHEVROLET

SPARK (M300) ('09)	12/09→

FORD

KA	01/08→
KA (RU8)	10/08→

KIA

PICANTO (JA)	03/17→

MAZDA

2 (DE)	07/07→06/15
2 Saloon (DE)	05/10→06/15

NISSAN

NOTE (E11)	01/05→06/12
TIIDA Hatchback	05/04→12/13
TIIDA Hatchback (C11X)	02/06→12/11
TIIDA Saloon (SC11X)	05/04→12/13

TOYOTA

IST (NCP6_)	04/02→07/07
URBAN CRUISER (NSP1_, NLP1_, ZSP1_, NCP11_)	07/07→
VIOS/YARIS Saloon (ZSP9_, NCP9_)	08/05→
YARIS (SCP9_, NSP9_, KSP9_, NCP9_, ZSP9_)	01/05→

AFL6038A

CHRYSLER

YPSILON	05/11→

FIAT

500L (199_)	09/12→
PANDA (312_, 319_)	02/12→
PANDA VAN (312_)	02/12→

LANCIA

YPSILON (312_)	05/11→

NISSAN

QASHQAI / QASHQAI +2 I (J10, JJ10)	12/06→12/13

AFL6040A

CITROËN

C3 Picasso	02/09→

FIAT

DOBLO Box Body / Estate (263_)	02/10→
DOBLO MPV (263_)	11/09→
DOBLO Platform/Chassis (263_)	02/10→

FORD

KUGA I	03/08→

OPEL

COMBO Box Body / Estate (X12)	02/12→
COMBO Platform/Chassis	08/12→
COMBO Tour (X12)	02/12→

SEAT

IBIZA V (6J5, 6P1)	03/08→

...AFL6040A

SEAT

IBIZA V SPORTCOUPE (6J1, 6P5)	07/08→
IBIZA V ST (6J8, 6P8)	03/10→

AFL6040E

ALPINA

B3 Convertible (E93)	09/07→05/13
B3 Coupe (E92)	09/07→02/14
D3 Coupe (E92)	07/08→05/13

BMW

3 Convertible (E93)	05/06→12/13
3 Coupe (E92)	01/05→12/13

FIAT

CROMA (194_)	06/05→

AFL6040F

AUDI

A1 (8X1, 8XK)	05/10→
A1 Sportback (8XA, 8XF)	09/11→

SEAT

Mii (KF1_)	10/11→
TOLEDO IV (KG3)	07/12→

SKODA

CITIGO	10/11→
FABIA (NJ3)	08/14→
FABIA Estate (NJ5)	10/14→
RAPID (NH3)	07/12→
RAPID Spaceback (NH1)	07/12→

VW

LOAD UP	12/14→
POLO (6R, 6C)	06/09→
POLO Van (6R)	01/14→
UP	08/11→
VENTO	01/10→

AFL6040G

CITROËN

C3 Picasso	02/09→
C-ELYSEE	11/12→
DS3	11/09→07/15
DS3 Convertible	01/13→07/15

PEUGEOT

301	11/12→

RENAULT

CLIO Grandtour (KR0/1_)	02/08→
CLIO III (BR0/1, CR0/1)	01/05→
FLUENCE (L30_)	02/10→
MEGANE CC (EZ0/1_)	06/10→
MEGANE III Coupe (DZ0/1_)	11/08→
MEGANE III Grandtour (KZ0/1)	11/08→
MEGANE III Hatchback (BZ0_)	11/08→
THALIA II (LU1/2_)	09/08→

AFL6040L

HYUNDAI

i20 (GB)	11/14→
i20 (PB, PBT)	08/08→
i20 ACTIVE (IB, GB)	09/15→
i20 Coupe	05/15→
ix35 (LM, EL, ELH)	08/09→
TUCSON (JM)	08/04→

INFINITI

EX	09/07→

KIA

SPORTAGE (JE_, KM_)	09/04→

LEXUS

LS (UCF30)	10/00→08/06

MAZDA

6 (GH)	08/07→12/13
6 Estate (GH)	12/07→07/13
6 Hatchback (GH)	08/07→07/13

NISSAN

NAVARA Platform/Chassis (D23)	01/15→
NP300 NAVARA Pickup (D23)	07/14→
X-TRAIL (T30)	06/01→01/13
X-TRAIL (T31)	03/07→07/14

...AFL6040L

RENAULT

LATITUDE (L70_)	07/10→
MEGANE Scenic (JA0/1_)	10/96→12/01
SCÉNIC I (JA0/1_)	09/99→10/03

SSANGYONG

KORANDO	07/10→
RODIUS II	07/13→
TIVOLI	01/15→
TURISMO	08/13→
XLV Closed Off-Road Vehicle	04/16→

SUBARU

IMPREZA Hatchback (GR, GH, G3)	03/07→05/14
IMPREZA Saloon (GR)	03/07→

SUZUKI

VITARA (LY)	02/15→

TOYOTA

AVENSIS (T25_)	04/03→11/08
AVENSIS Estate (T25, CDT25_, ZZT25_)	04/03→11/08
AVENSIS Saloon (T25)	04/03→11/08
COROLLA Estate (_E12J_, _E12T_)	03/01→12/08
PICNIC (_XM10)	05/96→12/01
RAV 4 III (ACA3_, ACE_, ALA3_, GSA3_, ZSA3_)	06/05→

VW

POLO Saloon (602, 604, 612, 614)	05/09→

AFL6045A

CHRYSLER

DELTA	08/11→

FIAT

BRAVO II (198_)	11/06→
BRAVO Van (198_)	03/08→06/14

HYUNDAI

i30 (FD)	10/07→11/11
i30 CW (FD)	10/07→06/12

KIA

CEE'D Hatchback (ED)	12/06→12/12
CEE'D SW (ED)	09/07→12/12
PRO CEE'D (ED)	02/08→02/13

LANCIA

DELTA III (844_)	08/08→08/14

PEUGEOT

308 II	09/13→
308 SW II	03/14→

SKODA

SUPERB (3T4)	03/08→05/15
SUPERB Estate (3T5)	10/09→05/15

VW

CADDY ALLTRACK Box (SAA)	05/15→
CADDY ALLTRACK Estate (SAB)	05/15→
CADDY III Box (2KA, 2KH, 2CA, 2CH)	03/04→05/15
CADDY III Estate (2KB, 2KJ, 2CB, 2CJ)	03/04→05/15
CADDY IV Box (SAA, SAH)	05/15→
CADDY IV Estate (SAB, SAJ)	05/15→
TOURAN (1T1, 1T2)	02/03→05/10
TOURAN (1T3)	05/10→05/15

AFL6045B

ALFA ROMEO

GIULIA (952_)	10/15→

ALPINA

B4 Convertible (F33)	03/14→
B4 Coupe (F32)	03/14→
D4 Convertible (F33)	09/14→
D4 Coupe (F32)	09/14→

BMW

4 Convertible (F33, F83)	10/13→
4 Coupe (F32, F82)	07/13→
4 Gran Coupe (F36)	03/14→

AFL6045G

RENAULT

MEGANE II (BM0/1_, CM0/1_)	07/01→10/12
MEGANE II Coupé-Cabriolet (EM0/1_)	09/03→03/10
MEGANE II Estate (KM0/1_)	08/03→08/12
MEGANE II Saloon (LM0/1_)	09/03→
MEGANE IV (B9A/M_)	11/15→
TALISMAN	06/15→
TALISMAN Grandtour	03/16→

AFL6045L

CITROËN

C2 (JM_)	09/03→
C2 ENTERPRISE	04/09→
C3 I (FC_)	02/02→

DACIA

DUSTER	04/10→
DUSTER Box	04/11→

HYUNDAI

i30 (FD)	10/07→11/11
i30 CW (FD)	10/07→06/12
SANTA FÉ II (CM)	10/05→12/12

INFINITI

Q45 I	01/89→12/96
QX50	08/13→

KIA

CEE'D Hatchback (ED)	12/06→12/12
CEE'D SW (ED)	09/07→12/12
MAGENTIS (MG)	10/05→
OPIRUS (GH)	09/03→
OPTIMA I	01/10→
PRO CEE'D (ED)	02/08→02/13
SORENTO I (JC)	08/02→
SPORTAGE (SL)	09/09→

LADA

VESTA	11/15→

LEXUS

IS III (GSE3_, AVE3_)	04/13→
RC (AVC1_, GSC1_, USC1_)	08/14→

MAZDA

3 (BM)	09/13→
3 Saloon (BM)	09/13→
6 Estate (GJ, GH)	12/12→
6 Saloon (GJ, GH)	12/12→
CX-5 (KE, GH)	11/11→

MITSUBISHI

LANCER Estate (CS_W)	09/03→12/08
LANCER Saloon (CS_A, CT0)	03/00→12/13
LANCER Saloon (CY/Z_A)	03/07→
LANCER SPORTBACK (CX_A)	10/07→

OPEL

INSIGNIA	07/08→
INSIGNIA A Country Tourer (G09)	07/08→03/17
INSIGNIA Estate	07/08→03/17
INSIGNIA Saloon	07/08→

RENAULT

MEGANE II (BM0/1_, CM0/1_)	07/01→10/12
MEGANE II Coupé-Cabriolet (EM0/1_)	09/03→03/10
MEGANE II Estate (KM0/1_)	08/03→08/12
MEGANE II Saloon (LM0/1_)	09/03→

SSANGYONG

RODIUS	05/05→
STAVIC	02/05→

SUBARU

FORESTER (SH)	01/08→
LEGACY IV (BL, BP)	09/03→12/15
LEGACY IV Estate (BL, BP, B13_)	09/03→12/09
OUTBACK (BL, BP)	09/03→06/10

AFL6045M

DACIA

DUSTER	04/10→
DUSTER Box	04/11→

AFL6048A

BMW

X5 (E70)	02/06→06/13

...AFL6048A

BMW

X6 (E71, E72)	06/07→06/14

SKODA

YETI (5L)	05/09→12/17

VW

EOS (1F7, 1F8)	03/06→08/15
GOLF V (1K1)	10/03→02/09
GOLF V Variant (1K5)	06/07→07/09
GOLF VI (5K1)	10/08→11/13
GOLF VI Variant (AJ5)	07/09→07/13
JETTA III (1K2)	08/05→10/10
PASSAT (3C2)	03/05→11/10
PASSAT (362)	08/10→12/14
PASSAT CC (357)	05/08→01/12
PASSAT Variant (3C5)	08/05→10/11
PASSAT Variant (365)	08/10→12/14
SCIROCCO (137, 138)	05/08→11/17

AFL6048B

ALPINA

B3 (E90)	09/07→05/13
B3 (F30)	03/13→
B3 Estate (E91)	09/07→05/13
B3 Estate (F31)	03/13→
D3 (E90)	12/05→02/14
D3 (F30)	03/14→
D3 Estate (E91)	12/05→05/13
D3 Estate (F31)	03/14→

AUDI

A3 (8P1)	05/03→08/12
A3 Convertible (8P7)	04/08→05/13
A3 Sportback (8PA)	09/04→03/13

BMW

3 (E90)	02/04→12/11
3 (F30, F35, F80)	03/11→
3 Gran Turismo (F34)	07/12→
3 Touring (E91)	12/04→06/12
3 Touring (F31)	07/11→
X1 (E84)	03/09→06/15

HYUNDAI

EQUUS / CENTENNIAL ('09)	03/09→

INFINITI

Q30	11/15→
QX30	04/16→

JAGUAR

XF (CC9_)	03/08→04/15
XF SPORTBRAKE (CC9_)	09/12→04/14
XJ (NNA_)	10/09→

LAND ROVER

FREELANDER 2 (LF_)	10/06→10/14

MERCEDES-BENZ

A-CLASS (W176)	06/12→
CLA Coupe (C117)	01/13→
CLA Shooting Brake (X117)	01/15→
GLA-CLASS (X156)	12/13→

RENAULT

KOLEOS (HY_)	09/08→

AFL6048E

ALPINA

B3 (E90)	09/07→05/13
B3 Estate (E91)	09/07→05/13
D3 (E90)	12/05→02/14
D3 Estate (E91)	12/05→05/13

AUDI

A3 (8P1)	05/03→08/12
A3 Sportback (8PA)	09/04→03/13

BMW

3 (E90)	02/04→12/11
3 Touring (E91)	12/04→06/12
X5 (E70)	02/06→06/13
X6 (E71, E72)	06/07→06/14

SKODA

OCTAVIA (1Z3)	02/04→06/13
OCTAVIA Combi (1Z5)	02/04→06/13

VW

GOLF V (1K1)	10/03→02/09

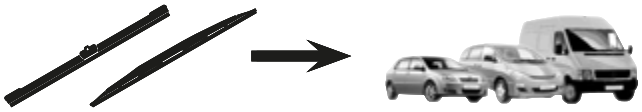

AFL6048F

AUDI
Q2 06/16→

SKODA
OCTAVIA (5E3) 11/12→
OCTAVIA Combi (5E5) 11/12→

VW
CC (358) 11/11→12/16
GOLF VI Convertible (517) 03/11→
JETTA IV (162, 163) 04/10→
PASSAT (362) 08/10→12/14
PASSAT (A32, A33) 01/11→
PASSAT ALLTRACK (365) 01/12→12/14
PASSAT Variant (365) 08/10→12/14

AFL6048L

HYUNDAI
GENESIS (BH) 01/08→12/15
GENESIS Coupe 01/08→
SONATA V (NF) 12/04→11/12

INFINITI
FX ('08) 07/08→
QX70 08/13→

KIA
CARENS I (FC) 06/99→10/02
CARENS II (FJ) 07/02→
CERATO II (TD) 01/09→
CERATO II Saloon (TD) 01/09→
CERATO KOUP (TD) 01/09→

LEXUS
ES (_V4_) 03/06→06/12
ES (MCV_, VZV_) 10/96→06/08
GS (GRS19_, UZS19_, URS19_) 01/05→11/11
LS (UVF4_, USF4_) 04/06→

MAZDA
3 (BL) 12/08→09/14
3 Saloon (BL) 12/08→

NISSAN
370 Z Coupe (Z34) 01/09→
370 Z Roadster (Z34) 01/09→
NP300 NAVARA (D40) 10/04→
NP300 NAVARA Platform/Chassis (D40) 08/08→
PATHFINDER III (R51) 01/05→
PATHFINDER IV (R52) 09/12→
TEANA I (J31) 02/03→09/08

OPEL
OMEGA B (25_, 26_, 27_) 03/94→07/03
OMEGA B Estate (21_, 22_, 23_) 03/94→07/03
SIGNUM 05/03→12/08
VECTRA C 04/02→
VECTRA C Estate 10/03→
VECTRA C GTS 08/02→

SUBARU
LEGACY V (BM, BR) 05/09→
LEGACY V Estate (BM, BR) 06/08→12/14
OUTBACK (BM, BR) 09/09→

TOYOTA
RAV 4 II (CLA2_, XA2_, ZCA2_, ACA2_) 06/00→11/05

AFL6050F

AUDI
A4 (8K2, B8) 11/07→12/15
A4 (8W2, B9) 05/15→
A4 Allroad (8KH, B8) 04/09→05/16
A4 Allroad (8WH, B9) 01/16→
A4 Avant (8K5, B8) 11/07→12/15
A4 Avant (8W5, B9) 08/15→
A5 (8T3) 06/07→01/17
A5 (F53) 06/16→
A5 Convertible (8F7) 03/09→01/17
A5 Convertible (F57) 11/16→
A5 Sportback (8TA) 09/09→01/17
A5 Sportback (F5A) 09/16→
A7 Sportback (4GA, 4GF) 10/10→
A7 Sportback (4KA) 10/17→

...AFL6050F

AUDI
Q3 (8U) 06/11→
Q5 (8R) 11/08→
Q5 (FYB) 05/16→
TT (FV3) 07/14→
TT Roadster (FV9) 11/14→

BENTLEY
MULSANNE (3Y_) 09/09→

HYUNDAI
ix55 09/06→

PORSCHE
MACAN (95B) 02/14→

VOLVO
S90 II 03/16→
V90 II 03/16→
XC40 (536) 10/17→
XC90 II 09/14→

AFL6050L

BMW
X5 (F15, F85) 06/12→
X6 (F16, F86) 08/14→

HYUNDAI
GRANDEUR (HG) 01/11→
GRANDEUR (TG) 06/03→
i800 02/08→
iLoad 02/08→

KIA
SORENTO II (XM) 11/09→
SOUL (AM) 01/09→
SOUL II (PS) 02/14→

LAND ROVER
RANGE ROVER IV (LG_) 08/12→
RANGE ROVER SPORT (LW_) 04/13→

LEXUS
GS (JZS160_, UZS161_, UZS160_) 08/97→12/04
SC (UZZ40_) 01/01→07/10

OPEL
INSIGNIA B Country Tourer (Z18) 06/17→
INSIGNIA B Grand Sport (Z18) 03/17→
INSIGNIA B Sports Tourer (Z18) 03/17→

RENAULT
LAGUNA II (BG0/1_) 03/01→
LAGUNA II Grandtour (KG0/1_) 03/01→

SUZUKI
KIZASHI (FR) 10/10→

TOYOTA
CAMRY Saloon (_XV4_) 01/06→12/14

AFL6050M

BMW
X2 (F39) 11/17→

AFL6053A

LAND ROVER
RANGE ROVER EVOQUE (LV_) 06/11→
RANGE ROVER EVOQUE Convertible (LV_) 11/15→

VW
TIGUAN (5N_) 09/07→

AFL6053L

BMW
X5 (E53) 05/00→02/07

CHRYSLER
SEBRING (JS) 09/06→12/10
SEBRING Convertible (JS) 05/07→12/10

CITROËN
C4 AIRCROSS 08/10→
C-CROSSER (EP_) 02/07→
C-CROSSER ENTERPRISE 01/09→

DODGE
AVENGER 06/07→

HONDA
ACCORD VIII (CP) 09/07→

...AFL6053L

HONDA
ACCORD VIII (CU) 06/08→
ACCORD VIII Estate 07/08→
PILOT 09/02→07/08

LANCIA
FLAVIA Convertible (JS_) 03/12→12/14
THEMA (LX_) 09/11→

LEXUS
LX (URJ201) 08/07→
LX (UZJ100) 09/97→03/08
RX (MCU15) 07/00→05/03

MITSUBISHI
ASX (GA_W_) 01/10→
ASX Van (GA_W_) 06/10→
OUTLANDER II (CW_W) 11/06→12/12
OUTLANDER II Van (CW_W) 12/06→11/12

PEUGEOT
406 (8B) 10/95→01/05
406 Break (8E/F) 10/96→10/04
4007 (GP_) 02/07→
4008 05/12→

SAAB
9-5 (YS3G) 01/10→01/12

VOLVO
S60 I 07/00→04/10
S80 I (TS, XY) 05/98→02/08
V70 II (SW) 11/99→12/08
XC70 CROSS COUNTRY 10/97→10/07
XC90 I 06/02→12/14

AFL6055B

FIAT
MULTIPLA (186_) 04/99→06/10

VOLVO
S60 I 07/00→04/10
S80 I (TS, XY) 05/98→02/08
V70 II (SW) 11/99→12/08
XC70 CROSS COUNTRY 10/97→10/07
XC90 I 06/02→12/14

AFL6060A

MERCEDES-BENZ
C-CLASS (W204) 01/07→01/14
C-CLASS Coupe (C204) 01/11→
C-CLASS T-Model (S204) 08/07→08/14
CLS (C218) 01/11→
CLS Shooting Brake (X218) 10/12→
E-CLASS (W212) 01/09→
E-CLASS Convertible (A207) 01/10→
E-CLASS Coupe (C207) 01/09→
E-CLASS T-Model (S212) 08/09→

AFL6060E

MERCEDES-BENZ
C-CLASS (W204) 01/07→01/14
C-CLASS Coupe (C204) 01/11→
C-CLASS T-Model (S204) 08/07→08/14
CLS (C218) 01/11→
CLS Shooting Brake (X218) 10/12→
E-CLASS (W212) 01/09→
E-CLASS Convertible (A207) 01/10→
E-CLASS Coupe (C207) 01/09→
E-CLASS T-Model (S212) 08/09→

VW
MULTIVAN V (7HM, 7HN, 7HF, 7EF, 7EM, 7EN) 04/03→08/15
TRANSPORTER V Box (7HA, 7HH, 7EA, 7EH) 04/03→08/15
TRANSPORTER V Bus (7HB, 7HJ, 7EB, 7EJ, 7EF, 7EG, 7HF, 7EC) 04/03→08/15
TRANSPORTER V Platform/Chassis (7JD, 7JE, 7JL, 7JY, 7JZ, 7FD 04/03→08/15

AFL6535A

CHEVROLET
TRAX 12/12→

FIAT
500X (334_) 09/14→

...AFL6535A

HYUNDAI
ix20 (JC) 11/10→

KIA
VENGA (YN) 02/10→

NISSAN
PULSAR Hatchback (C13) 08/12→

OPEL
MOKKA 06/12→

AFL6535G

LADA
XRAY 02/16→

RENAULT
CAPTUR 06/13→
CLIO Grandtour IV 01/13→
CLIO IV 11/12→
CLIO IV Box 01/14→

AFL6535L

FIAT
SEDICI (FY_) 06/06→10/14

HONDA
JAZZ III (GE, GG_, GP_) 10/07→
JAZZ IV (GK) 09/13→

HYUNDAI
GRAND SANTA FÉ 01/13→
i30 (GD) 06/11→
i30 Coupe 05/13→
i30 CW (GD) 06/12→
SANTA FÉ III (DM) 09/12→

KIA
CEE'D (JD) 05/12→
PRO CEE'D (JD) 03/13→

NISSAN
LEAF (ZE0) 11/10→
MICRA V (K14) 12/16→

SUZUKI
SX4 (EY, GY) 06/06→
SX4 Saloon (GY) 10/07→
SX4 S-Cross 08/13→

TOYOTA
AURIS (ZWE18_, NZE18_, ZRE18_) 10/12→
AURIS TOURING SPORTS (ADE18_, ZWE18_, ZRE18_) 07/13→
AURIS VAN Box (NDE18_) 03/13→

AFL6535M

RENAULT
CAPTUR 06/13→

AFL6538A

FORD
FIESTA VI 06/08→
FIESTA VI Van 01/09→
FIESTA VII 01/17→
FIESTA Saloon 04/10→

AFL6538B

ABARTH
GRANDE PUNTO (199_) 12/07→12/12
PUNTO (199_) 03/12→
PUNTO EVO (199_) 07/08→02/12

CHEVROLET
AVEO Hatchback (T300) 03/11→
AVEO Saloon (T300) 03/11→

FIAT
GRANDE PUNTO (199_) 10/05→
GRANDE PUNTO Van (199_) 10/05→06/13
LINEA (323_) 06/07→
PUNTO (199_) 03/12→
PUNTO EVO (199_) 07/08→
PUNTO EVO Van (199_) 03/09→02/12
PUNTO Van (199_) 02/06→

AFL6540A

CITROËN
BERLINGO (B9) 04/08→

...AFL6540A

CITROËN
BERLINGO Box (B9)	04/08→
BERLINGO Platform/Chassis (B9)	04/08→
C3 III (SX)	07/16→

FIAT
TIPO Estate (356_)	03/16→
TIPO Hatchback (356_)	03/16→
TIPO Saloon (356_)	10/15→

OPEL
ADAM	10/12→

PEUGEOT
208	03/12→
208 Box	10/12→
2008	03/13→
PARTNER Box	04/08→
PARTNER Platform/Chassis	01/09→
PARTNER Tepee	04/08→

AFL6540B

ALFA ROMEO
MITO (955_)	08/08→

OPEL
CORSA D	07/06→
CORSA D Van	07/06→
CORSA E	09/14→
CORSA E Van	09/14→

AFL6540F

BMW
X1 (F48)	11/14→

OPEL
CROSSLAND X (P17)	03/17→

SEAT
LEON (5F1)	09/12→
LEON SC (5F5)	01/13→
LEON ST (5F8)	08/13→

AFL6540G

CITROËN
C3 II	11/09→

RENAULT
LAGUNA Coupe (DT0/1)	09/08→
LAGUNA III (BT0/1)	10/07→
LAGUNA III Grandtour (KT0/1)	10/07→

AFL6540L

HONDA
ACCORD VII (CL)	01/03→09/12
ACCORD VII (CM)	09/02→05/08
ACCORD VII Tourer (CM)	04/03→05/08
ACCORD IX Saloon (CR)	09/12→
CR-V IV (RE)	01/12→
INSIGHT (ZE_)	04/09→

HYUNDAI
ACCENT IV (RB)	11/10→
ACCENT IV Saloon (RB)	08/10→
ELANTRA Saloon (AD)	09/15→
i30 (PDE, PD)	11/16→
i30 Estate (PDE)	03/17→
i30 FASTBACK (PDE)	06/17→
i40 (VF)	03/12→
i40 CW (VF)	07/11→
KONA (OS)	06/17→
TUCSON (TLE)	05/15→
VELOSTER (FS)	03/11→

INFINITI
G Convertible	09/10→
G Coupe	09/07→
G Saloon ('07)	01/07→
Q50	04/13→
Q60 Convertible	10/13→
Q60 Coupe	10/13→

KIA
CARENS III (UN)	09/06→
NIRO	09/16→
RIO III (UB)	09/11→
RIO III Saloon (UB)	09/10→

...AFL6540L

KIA
RIO IV (YB, SC)	01/17→
RIO IV Saloon (SC, FB)	07/17→
SEDONA III	09/05→
SORENTO III (UM)	01/15→
SPORTAGE (QL)	09/15→
STONIC (YB)	07/17→

MAZDA
5 (CR19)	02/05→12/10
5 (CW)	09/10→
CX-7 (ER)	06/06→12/14
CX-9 (TB)	01/07→

NISSAN
MURANO II (Z51)	10/07→09/14
QASHQAI II (J11, J11_)	11/13→
X-TRAIL (T32_)	10/13→

PEUGEOT
206+ (T3E)	01/09→
206 CC (2D)	09/00→
206 Hatchback (2A/C)	08/98→
206 Saloon	03/07→
206 SW (2E/K)	07/02→

RENAULT
KADJAR	06/15→
KOLEOS II	08/16→

SUBARU
FORESTER (SJ)	11/12→
IMPREZA Hatchback (GP)	10/11→
LEVORG	03/15→
OUTBACK (BS)	10/14→
WRX Hatchback (GP)	10/11→12/12
WRX Saloon (GJ)	07/11→
XV	12/11→

TOYOTA
AURIS (NRE15_, ZZE15_, ADE15_, ZRE15_, NDE15_)	10/06→09/12
AVENSIS VERSO (_CLM2_, _ACM2_)	08/01→11/09
CELICA (ZZT23_)	08/99→03/06
COROLLA Saloon (E15_)	10/06→
COROLLA Verso (ZDE12_, CDE12_)	07/01→07/04
COROLLA Verso (ZER_, ZZE12_, R1_)	03/04→04/09
PREVIA III (_R2_, _R5_)	10/05→
PRIUS (ZVW3_)	04/09→
PRIUS Hatchback (NHW20_)	08/03→03/09
PRIUS PLUS (ZVW4_)	05/11→
RAV 4 IV (WWA4_, AVA4_, ZSA4_, ALA4_)	12/12→
VERSO (_AUR2_, WAR2_, _ZGR2_)	04/09→

AFL6540M

RENAULT
KAPTUR (H5_)	03/16→

AFL6543E

FORD
FOCUS II (DA_)	07/04→09/12
FOCUS II Convertible	10/06→09/10
FOCUS II Estate (DA_)	07/04→09/12
FOCUS II Saloon (DA_)	04/05→

PEUGEOT
207 (WA_, WC_)	02/06→
207 CC (WD_)	02/07→
207 Saloon	12/07→
207 SW (WK_)	02/07→
207 Van	04/07→

AFL6545D

ALPINA
B5 (F10)	09/10→12/16
B5 Estate (F11)	09/10→12/16
B7 (F01, F02)	03/09→01/16
D5 (F10)	09/11→12/16
D5 Touring (F11)	09/11→12/16

BMW
5 (F10, F18)	01/09→10/16

...AFL6545D

BMW
5 Gran Turismo (F07)	01/09→02/17
5 Touring (F11)	11/09→
7 (F01, F02, F03, F04)	02/08→12/15

AFL6545F

ALFA ROMEO
STELVIO (949_)	12/16→

AUDI
A3 (8V1, 8VK)	04/12→
A3 Convertible (8V7, 8VE)	10/13→
A3 Limousine (8VS, 8VM)	05/13→
A3 Sportback (8VA, 8VF)	09/12→

SEAT
ATECA	04/16→
IBIZA V (KJ1)	01/17→

SKODA
KAROQ (NU7)	07/17→
SUPERB (3V3)	03/15→
SUPERB Estate (3V5)	03/15→

VW
GOLF ALLTRACK (BA5)	12/14→
GOLF VII (5G1, BE1)	08/12→
GOLF VII Estate (BA5)	04/13→
POLO (AW1, BZ1)	06/17→

AFL6545L

HONDA
CIVIC IX (FK)	02/12→
CIVIC IX Saloon (FB, FG)	09/11→
CIVIC IX Tourer (FK)	01/14→
CIVIC X Hatchback (FC_, FK)	09/16→
CIVIC X Saloon (FC_)	09/15→
HR-V (RU)	11/14→

HYUNDAI
IONIQ	03/16→
SONATA VI (YF)	01/09→12/15

INFINITI
Q60 Coupe	09/16→
Q70 (Y51)	03/13→

JEEP
CHEROKEE (KL)	11/13→

KIA
OPTIMA II	09/15→
OPTIMA Sportswagon (JF)	09/16→
STINGER (CK)	06/17→

LEXUS
CT (ZWA10_)	12/10→
ES (_V6_)	06/12→
GS (GRL1_, GWL1_)	09/11→

MITSUBISHI
OUTLANDER III (GG_W, GF_W, ZJ)	08/12→
OUTLANDER III Van (GF_W, GG_W)	04/13→

NISSAN
ALMERA TINO (V10)	12/98→02/06
MURANO I (Z50)	08/03→09/08
MURANO III (Z52)	10/14→

SMART
FORFOUR (454)	01/04→06/06

TOYOTA
CAMRY Saloon (_V5_)	09/11→
SIENNA (ASL3_, GSL3_)	01/10→

AFL6548A

ALPINA
B5 (G30)	03/17→
B5 Touring (G31)	03/17→
B7 (G12)	02/16→
D5 (G30)	07/17→
D5 Touring (G31)	07/17→

BMW
2 Active Tourer (F45)	11/13→
2 Gran Tourer (F46)	07/14→
5 (G30, F90)	09/16→

...AFL6548A

BMW
5 Touring (G31)	03/17→
7 (G11, G12)	10/14→

FIAT
TALENTO Box	06/16→
TALENTO Kombi	06/16→
TALENTO Multicab	06/16→
TALENTO Platform/Chassis	06/16→

FORD
MONDEO IV (BA7)	03/07→01/15
MONDEO IV Saloon (BA7)	03/07→01/15
MONDEO IV Turnier (BA7)	03/07→01/15

JAGUAR
F-PACE (DC_)	09/15→

MASERATI
QUATTROPORTE VI	11/12→

NISSAN
NV300 Box (X82)	09/16→
NV300 Kombi (X82)	09/16→
NV300 Platform/Chassis (X82)	09/16→

OPEL
VIVARO Box	06/14→
VIVARO Combi	06/14→
VIVARO Platform/Chassis	06/14→

RENAULT
TRAFIC III Box	05/14→
TRAFIC III Bus	05/14→
TRAFIC III Platform/Chassis	05/14→

VOLVO
C70 II Convertible	03/06→12/13
V40 Hatchback	03/12→

AFL6548B

MERCEDES-BENZ
B-CLASS (W246, W242)	10/11→

AFL6548E

ALPINA
XD3 (F25)	04/13→

BMW
X3 (F25)	09/10→

FORD
C-MAX (DM2)	02/07→09/10
FOCUS C-MAX	10/03→03/07

AFL6548F

VW
ARTEON (3H7)	04/17→
PASSAT (3G2)	08/14→
PASSAT ALLTRACK (3G5)	05/15→
PASSAT Variant (3G5)	08/14→
T-ROC (A11)	11/17→

AFL6548G

CITROËN
DISPATCH Van/Box ('16)	04/16→
JUMPY	04/16→
JUMPY Platform/Chassis	09/16→
NEMO Box (AA_)	02/08→
NEMO Estate	04/09→
SPACETOURER	04/16→

FIAT
FIORINO Box Body / Estate (225_)	01/07→
QUBO (225_)	02/08→

PEUGEOT
BIPPER (AA_)	02/08→
BIPPER Tepee	04/08→
EXPERT Box	04/16→
EXPERT Platform/Chassis	09/16→
TRAVELLER	04/16→

TOYOTA
PROACE Box	02/16→
PROACE Bus	02/16→

AFL6550A

BMW
X4 (F26)	05/13→03/18

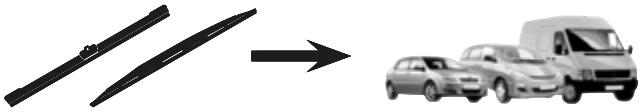

...AFL6550A

VOLVO

C30	09/06→12/13
S40 II (MS)	01/04→12/12
S60 II	04/10→
S80 II (AS)	03/06→
V50 (MW)	12/03→12/12
V60	07/10→
V70 III (BW)	04/07→
XC60	05/08→
XC70 II	04/07→

AFL6553F

AUDI

A6 (4G2, C7, 4GC)	11/10→
A6 Allroad (4GH, 4GJ)	01/12→
A6 Avant (4G5, C7, 4GD)	05/11→

VW

TIGUAN (AD1)	01/16→
TIGUAN ALLSPACE (BW2)	03/17→

AFL6555A

CITROËN

RELAY Bus	04/06→
RELAY Platform/Chassis	04/06→
RELAY Van/Box	04/06→

FIAT

DUCATO Box (250_, 290_)	07/06→
DUCATO Bus (250_, 290_)	07/06→
DUCATO Platform/Chassis (250_, 290_)	07/06→

PEUGEOT

BOXER Box	04/06→
BOXER Bus	09/05→
BOXER Platform/Chassis	04/06→

AFL6560B

MERCEDES-BENZ

SPRINTER 3,5-t Box (906)	06/06→
SPRINTER 3,5-t Bus (906)	06/06→
SPRINTER 3,5-t Platform/Chassis (906)	06/06→
SPRINTER 3-t Box (906)	06/06→
SPRINTER 3-t Bus (906)	06/06→
SPRINTER 3-t Platform/Chassis (906)	06/06→
SPRINTER 4,6-t Box (906)	06/06→
SPRINTER 4,6-t Bus	06/06→
SPRINTER 4,6-t Platform/Chassis (906)	06/06→
SPRINTER 5-t Box (906)	06/06→
SPRINTER 5-t Bus	06/06→
SPRINTER 5-t Platform/Chassis (906)	06/06→

VW

CRAFTER 30-35 Bus (2E_)	04/06→12/16
CRAFTER 30-50 Box (2E_)	04/06→12/16
CRAFTER 30-50 Platform/Chassis (2F_)	04/06→12/16

AFL6565E

LOTUS

EVORA	05/09→

MERCEDES-BENZ

CLS (C219)	10/04→02/11
E-CLASS (W211)	03/02→03/09
E-CLASS T-Model (S211)	03/03→07/09
SL (R230)	10/01→01/12
SLR (R199)	04/04→
SLR ROADSTER (R199)	10/06→

PORSCHE

CAYENNE (9PA)	09/02→09/10
CAYENNE (92A)	06/10→

VW

TOUAREG (7LA, 7L6, 7L7)	10/02→05/10
TOUAREG (7P5)	01/10→

AFL6858A

OPEL

MERIVA B	06/10→

AFL6863A

OPEL

ASTRA GTC J	10/11→
ASTRA J	12/09→
ASTRA J Saloon	06/12→
ASTRA J Sports Tourer	10/10→
CASCADA (W13)	03/13→

AFL7040A

FORD

TOURNEO COURIER Kombi	02/14→
TRANSIT COURIER Box	02/14→
TRANSIT COURIER Kombi	02/14→

PEUGEOT

3008 SUV (M_)	05/16→
5008 II	12/16→

SEAT

ALHAMBRA (710, 711)	06/10→

VW

GOLF SPORTSVAN (AM1)	02/14→
SHARAN (7N1, 7N2)	05/10→
TOURAN (5T1)	05/15→

AFL7055

HONDA

CIVIC VIII Hatchback (FN, FK)	09/05→
CIVIC VIII Saloon (FD, FA)	09/05→

AFL7055B

CITROËN

C5 III (RD_)	02/08→
C5 III Break (TD_)	02/08→

OPEL

ZAFIRA B (A05)	07/05→
ZAFIRA B Van	07/05→

AFL7060A

OPEL

ASTRA K	06/15→
ASTRA K Sports Tourer	11/15→

AFL7550A

FORD

TRANSIT Bus ('13)	08/13→
TRANSIT Platform/Chassis ('13)	08/13→
TRANSIT Van/Box ('13)	08/13→

AFL7563B

FORD

B-MAX (JK)	10/12→
B-MAX Van	10/12→
C-MAX II (DXA/CB7, DXA/CEU)	04/10→
C-MAX II Van	12/10→
GRAND C-MAX (DXA/CB7, DXA/CEU)	12/10→
GRAND C-MAX Van	12/10→

AFL7570A

FORD

TOURNEO CUSTOM Bus	04/12→
TRANSIT CUSTOM Box	04/12→
TRANSIT CUSTOM Bus	04/12→

RENAULT

ESPACE V	02/15→

AFL8070A

OPEL

ZAFIRA TOURER C (P12)	10/11→

PEUGEOT

3008	06/09→12/16
5008	06/09→

RENAULT

GRAND SCÉNIC IV (R9_)	09/16→
SCÉNIC IV (J9_)	09/16→

AFL8075E

CITROËN

C4 Grand Picasso I (UA_)	10/06→
C4 Picasso I (UD_)	10/06→10/13

AFR48

FORD

MONDEO IV (BA7)	03/07→01/15

AFR50

OPEL

INSIGNIA	07/08→

AFR53

BMW

i3 (I01)	08/13→

SMART

FORTWO Cabrio (451)	01/07→
FORTWO Coupe (451)	01/07→

AFR55

CITROËN

C5 III (RD_)	02/08→
C5 III Break (TD_)	02/08→

OPEL

ZAFIRA B (A05)	07/05→
ZAFIRA B Van	07/05→

AFR58

MERCEDES-BENZ

A-CLASS (W169)	09/04→06/12
B-CLASS (W245)	03/05→11/11
VANEO (414)	02/02→07/05

OPEL

MERIVA B	06/10→

AFR60

BMW

i8 (I12)	03/14→
i8 Roadster (I15)	03/18→

CITROËN

C4 Coupe (LA_)	11/04→07/11
C4 I (LC_)	11/04→07/11
C4 Saloon	07/06→

OPEL

ASTRA K	06/15→
ASTRA K Sports Tourer	11/15→

PEUGEOT

307 CC (3B)	10/03→

AFR63

FORD

B-MAX (JK)	10/12→
B-MAX Van	10/12→
C-MAX II (DXA/CB7, DXA/CEU)	04/10→
C-MAX II Van	12/10→
GRAND C-MAX (DXA/CB7, DXA/CEU)	12/10→
GRAND C-MAX Van	12/10→

OPEL

ASTRA GTC J	10/11→
ASTRA J	12/09→
ASTRA J Saloon	06/12→
ASTRA J Sports Tourer	10/10→
CASCADA (W13)	03/13→

AFR65

CHEVROLET

VOLT	04/11→

CITROËN

C4 II (B7)	11/09→
DS4	04/11→07/15
DS5	11/11→07/15
XSARA PICASSO (N68)	12/99→

FORD

GALAXY (WA6)	05/06→06/15
KUGA II (DM2)	05/12→
KUGA II Van	05/12→
S-MAX (WA6)	05/06→12/14

MERCEDES-BENZ

VIANO (W639)	09/03→
VITO Bus (W639)	09/03→
VITO / MIXTO Box (W639)	09/03→

...AFR65

OPEL

AMPERA	11/11→

PEUGEOT

307 (3A/C)	08/00→
307 Break (3E)	03/02→12/09
307 SW (3H)	03/02→12/09
308 (4A_, 4C_)	09/07→
308 CC	02/09→
308 SW	09/07→
508	11/10→
508 SW	11/10→
RCZ	03/10→

RENAULT

GRAND SCÉNIC III (JZ0/1_)	02/09→
MODUS / GRAND MODUS (F/JP0_)	09/04→
SCÉNIC III (JZ0/1_)	02/09→
VEL SATIS (BJ0_)	06/02→

SEAT

LEON (1P1)	05/05→12/12

AFR70

CITROËN

C6 (TD_)	09/05→

FORD

GALAXY (WGR)	03/95→05/06
MONDEO V Hatchback	09/14→
MONDEO V Saloon	09/12→
MONDEO V Turnier	09/14→
TRANSIT CUSTOM Box	04/12→

OPEL

ZAFIRA TOURER C (P12)	10/11→

PEUGEOT

407 (6D_)	05/04→
407 Coupe (6C_)	10/05→
407 SW (6E_)	05/04→
3008	06/09→12/16
5008	06/09→

RENAULT

ESPACE IV (JK0/1_)	11/02→
ESPACE V	02/15→
GRAND SCÉNIC IV (R9_)	09/16→
SCÉNIC IV (J9_)	09/16→

SEAT

ALHAMBRA (7V8, 7V9)	04/96→03/10

VW

GOLF PLUS (5M1, 521)	01/05→12/13
SHARAN (7M8, 7M9, 7M6)	05/95→03/10
TOURAN (1T1, 1T2)	02/03→05/10

AFR75

CITROËN

C4 Grand Picasso I (UA_)	10/06→
C4 Grand Picasso II	09/13→
C4 Picasso I (UD_)	10/06→10/13
C4 Picasso II	02/13→

FORD

FOCUS III	07/10→
FOCUS III Box Body / Estate	02/12→
FOCUS III Box Body / Hatchback	01/11→
FOCUS III Saloon	07/10→
FOCUS III Turnier	07/10→
FOCUS III Van	02/12→
GALAXY	01/15→
S-MAX	01/15→
TOURNEO CONNECT / GRAND TOURNEO CONNECT Kombi	09/13→
TRANSIT CONNECT Box	02/13→
TRANSIT CONNECT Kombi	02/13→

AFU5555

LAND ROVER

DISCOVERY III (LA_)	07/04→09/09
DISCOVERY IV (LA_)	09/09→
RANGE ROVER SPORT (LS_)	02/05→03/13

AFU5853B

SMART

FORTWO Cabrio (451)	01/07→

...AFU5853B

SMART

FORTWO Coupe (451)	01/07→

AFU6040A

RENAULT

TWINGO II (CN0_)	03/07→
WIND (E4M_)	07/10→

AFU6058C

ALPINA

B5 (E60)	03/05→09/10
B5 Estate (E61)	03/05→09/10
B6 Convertible (E64)	04/06→08/10
B6 Coupe (E63)	04/06→08/10

BMW

5 (E60)	12/01→03/10
5 Touring (E61)	03/04→12/10
6 (E63)	01/04→12/10
6 Convertible (E64)	03/04→12/10

AFU6555G

RENAULT

GRAND SCÉNIC II (JM0/1_)	04/04→
SCÉNIC II (JM0/1_)	06/03→

AFU6555H

RENAULT

GRAND SCÉNIC II (JM0/1_)	04/04→
SCÉNIC II (JM0/1_)	06/03→

AFU6558B

MERCEDES-BENZ

A-CLASS (W169)	09/04→06/12
B-CLASS (W245)	03/05→11/11
VANEO (414)	02/02→07/05

AFU6565A

CHEVROLET

VOLT	04/11→

OPEL

AMPERA	11/11→

PEUGEOT

508	11/10→
508 SW	11/10→
RCZ	03/10→

AFU6565B

SEAT

LEON (1P1)	05/05→12/12

AFU6565E

CITROËN

XSARA PICASSO (N68)	12/99→

AFU7060B

CITROËN

C4 Coupe (LA_)	11/04→07/11
C4 I (LC_)	11/04→07/11
C4 Saloon	07/06→

PEUGEOT

307 CC (3B)	10/03→

AFU7065B

FORD

KUGA II (DM2)	05/12→
KUGA II Van	05/12→

MERCEDES-BENZ

VIANO (W639)	09/03→
VITO Bus (W639)	09/03→
VITO / MIXTO Box (W639)	09/03→

PEUGEOT

307 (3A/C)	08/00→
307 Break (3E)	03/02→12/09
307 SW (3H)	03/02→12/09

AFU7065E

RENAULT

MODUS / GRAND MODUS (F/JP0_)	09/04→

AFU7070B

FORD

MONDEO V Hatchback	09/14→
MONDEO V Saloon	09/12→
MONDEO V Turnier	09/14→

AFU7070E

CITROËN

C6 (TD_)	09/05→

FORD

GALAXY (WGR)	03/95→05/06

PEUGEOT

407 (6D_)	05/04→
407 Coupe (6C_)	10/05→
407 SW (6E_)	05/04→

SEAT

ALHAMBRA (7V8, 7V9)	04/96→03/10

VW

GOLF PLUS (5M1, 521)	01/05→12/13
SHARAN (7M8, 7M9, 7M6)	05/95→03/10
TOURAN (1T1, 1T2)	02/03→05/10

AFU7565A

CITROËN

C4 II (B7)	11/09→
DS4	04/11→07/15
DS5	11/11→07/15

FORD

GALAXY (WA6)	05/06→06/15
S-MAX (WA6)	05/06→12/14

PEUGEOT

308 (4A_, 4C_)	09/07→
308 CC	02/09→
308 SW	09/07→

AFU7565G

RENAULT

GRAND SCÉNIC III (JZ0/1_)	02/09→
SCÉNIC III (JZ0/1_)	02/09→

AFU7570E

RENAULT

ESPACE IV (JK0/1_)	11/02→

AFU7575A

FORD

FOCUS III	07/10→
FOCUS III Box Body / Estate	02/12→
FOCUS III Box Body / Hatchback	01/11→
FOCUS III Saloon	07/10→
FOCUS III Turnier	07/10→
FOCUS III Van	02/12→

AFU7575B

FORD

GALAXY	01/15→
S-MAX	01/15→
TOURNEO CONNECT / GRAND TOURNEO CONNECT Kombi	09/13→
TRANSIT CONNECT Box	02/13→
TRANSIT CONNECT Kombi	02/13→

AHL35

HONDA

JAZZ III (GE, GG_, GP_)	10/07→
JAZZ IV (GK)	09/13→

HYUNDAI

GRAND SANTA FÉ	01/13→
i30 (GD)	06/11→
i30 Coupe	05/13→
i30 CW (GD)	06/12→
SANTA FÉ III (DM)	09/12→

KIA

CEE'D Sportswagon (JD)	09/12→
CEE'D (JD)	05/12→
PRO CEE'D (JD)	03/13→

NISSAN

LEAF (ZE0)	11/10→
MICRA V (K14)	12/16→

...AHL35

NISSAN

NOTE (E12)	09/12→

SUZUKI

SX4 S-Cross	08/13→

TOYOTA

AURIS (ZWE18_, NZE18_, ZRE18_)	10/12→
AURIS TOURING SPORTS (ADE18_, ZWE18_, ZRE18_)	07/13→
AURIS VAN Box (NDE18_)	03/13→
FJ CRUISER (GSJ1_)	01/06→
IST (NCP6_)	04/02→07/07
URBAN CRUISER (NSP1_, NLP1_, ZSP1_, NCP11_)	07/07→

AHL40

HONDA

CR-V IV (RE)	01/12→
INSIGHT (ZE_)	04/09→

HYUNDAI

ELANTRA Saloon (AD)	09/15→
i20 (GB)	11/14→
i20 (PB, PBT)	08/08→
i20 ACTIVE (IB, GB)	09/15→
i20 Coupe	05/15→
i30 (PDE, PD)	11/16→
i30 Estate (PDE)	03/17→
i30 FASTBACK (PDE)	06/17→
i40 (VF)	03/12→
i40 CW (VF)	07/11→
KONA (OS)	06/17→
TUCSON (TLE)	05/15→
VELOSTER (FS)	03/11→

KIA

NIRO	09/16→
RIO III (UB)	09/11→
RIO III Saloon (UB)	09/10→
RIO IV (YB, SC)	01/17→
RIO IV Saloon (SC, FB)	07/17→
SORENTO III (UM)	01/15→
SPORTAGE (QL)	09/15→
STONIC (YB)	07/17→

MAZDA

6 (GH)	08/07→12/13
6 Estate (GH)	12/07→07/13
6 Hatchback (GH)	08/07→07/13
CX-7 (ER)	06/06→12/14
CX-9 (TB)	01/07→

NISSAN

MURANO II (Z51)	10/07→09/14
QASHQAI II (J11, J11_)	11/13→
X-TRAIL (T32_)	10/13→

RENAULT

KADJAR	06/15→
KOLEOS II	08/16→

SSANGYONG

TIVOLI	01/15→
TURISMO	08/13→
XLV Closed Off-Road Vehicle	04/16→

SUBARU

FORESTER (SJ)	11/12→
IMPREZA Hatchback (GR, GH, G3)	03/07→05/14
IMPREZA Saloon (GR)	03/07→
LEVORG	03/15→
OUTBACK (BS)	10/14→
WRX Hatchback (GP)	10/11→12/12
WRX Saloon (GJ)	07/11→
XV	12/11→

SUZUKI

VITARA (LY)	02/15→

TOYOTA

COROLLA Saloon (E15_)	10/06→
FJ CRUISER (GSJ1_)	01/06→
PREVIA III (_R2_, _R5_)	10/05→
PRIUS (ZVW3_)	04/09→

...AHL40

TOYOTA

PRIUS PLUS (ZVW4_)	05/11→
RAV 4 III (ACA3_, ACE_, ALA3_, GSA3_, ZSA3_)	06/05→
RAV 4 IV (WWA4_, AVA4_, ZSA4_, ALA4_)	12/12→
VERSO (_AUR2_, WAR2_, _ZGR2_)	04/09→

AHL45

ABARTH

124 Spider (348_)	03/16→

FIAT

124 Spider (348_)	03/16→

HONDA

CIVIC IX (FK)	02/12→
CIVIC IX Saloon (FB, FG)	09/11→
CIVIC IX Tourer (FK)	01/14→
CIVIC X Hatchback (FC_, FK)	09/16→
CIVIC X Saloon (FC_)	09/15→

HYUNDAI

IONIQ	03/16→
SONATA VI (YF)	01/09→12/15

JEEP

CHEROKEE (KL)	11/13→

KIA

OPTIMA II	09/15→
OPTIMA Sportswagon (JF)	09/16→
STINGER (CK)	06/17→

LEXUS

CT (ZWA10_)	12/10→
ES (_V6_)	06/12→
GS (GRL1_, GWL1_)	09/11→
IS III (GSE3_, AVE3_)	04/13→
RC (AVC1_, GSC1_, USC1_)	08/14→

MAZDA

3 (BM)	09/13→
3 Saloon (BM)	09/13→
6 Estate (GJ, GH)	12/12→
6 Saloon (GJ, GH)	12/12→
CX-3 (DK)	01/15→
CX-5 (KE, GH)	11/11→
MX-5 IV (ND)	04/15→
MX-5 RF Targa (ND)	10/16→

MINI

MINI (F55)	09/13→
MINI (F56)	04/13→
MINI Convertible (F57)	11/14→

MITSUBISHI

OUTLANDER III (GG_W, GF_W, ZJ)	08/12→
OUTLANDER III Van (GF_W, GG_W)	04/13→

NISSAN

GT-R (R35)	12/07→
MURANO I (Z50)	08/03→09/08
MURANO III (Z52)	10/14→

OPEL

INSIGNIA	07/08→
INSIGNIA A Country Tourer (G09)	07/08→03/17
INSIGNIA Estate	07/08→03/17
INSIGNIA Saloon	07/08→

SUBARU

FORESTER (SH)	01/08→

TOYOTA

CAMRY Saloon (_V5_)	09/11→
IQ (KPJ1_, NGJ1_, KGJ1_, NUJ1_)	11/08→
MATRIX (ZZE13_)	01/02→12/07
SIENNA (ASL3_, GSL3_)	01/10→

AHL48

ABARTH

124 Spider (348_)	03/16→

FIAT

124 Spider (348_)	03/16→

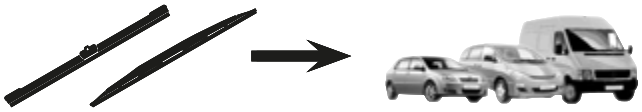

...AHL48

HONDA
CIVIC IX (FK)		02/12→

INFINITI
Q60 Coupe		09/16→
Q70 (Y51)		03/13→

LEXUS
GS (GRS19_, UZS19_, URS19_)		01/05→11/11
LS (UVF4_, USF4_)		04/06→

MINI
MINI (F55)		09/13→
MINI (F56)		04/13→
MINI Convertible (F57)		11/14→

NISSAN
370 Z Coupe (Z34)		01/09→
370 Z Roadster (Z34)		01/09→
TEANA I (J31)		02/03→09/08

SUBARU
LEGACY V (BM, BR)		05/09→
LEGACY V Estate (BM, BR)		06/08→12/14
OUTBACK (BM, BR)		09/09→

SUZUKI
IGNIS III (MF)		10/16→

AHL50

BMW
X5 (F15, F85)		06/12→
X6 (F16, F86)		08/14→

CHEVROLET
CAMARO ('09)		02/09→12/15
CAMARO Convertible ('11)		01/11→

CITROËN
C-CROSSER (EP_)		02/07→
C-CROSSER ENTERPRISE		01/09→

HONDA
CR-Z (ZF1)		06/10→

HYUNDAI
GRANDEUR (HG)		01/11→

LANCIA
THEMA (LX_)		09/11→

LAND ROVER
DISCOVERY SPORT (LC_)		09/14→
RANGE ROVER IV (LG_)		08/12→
RANGE ROVER SPORT (LW_)		04/13→

LEXUS
IS C (GSE2_)		04/09→
IS II (GSE2_, ALE2_, USE2_)		08/05→03/13

MAZDA
6 Hatchback (GH)		08/07→07/13

MITSUBISHI
ASX (GA_W_)		01/10→
ASX Van (GA_W_)		06/10→
OUTLANDER II (CW_W)		11/06→12/12
OUTLANDER II Van (CW_W)		12/06→11/12

OPEL
INSIGNIA B Country Tourer (Z18)		06/17→
INSIGNIA B Grand Sport (Z18)		03/17→
INSIGNIA B Sports Tourer (Z18)		03/17→

PEUGEOT
4007 (GP_)		02/07→

SAAB
9-5 (YS3G)		01/10→01/12

SUBARU
BRZ		06/12→

SUZUKI
IGNIS III (MF)		10/16→
KIZASHI (FR)		10/10→

TOYOTA
CAMRY Saloon (_XV4_)		01/06→12/14
GT 86 Coupe (ZN6_)		03/12→

AHL55

HONDA
ACCORD VIII (CP)		09/07→

...AHL55

HONDA
ACCORD VIII (CU)		06/08→
ACCORD VIII Estate		07/08→
PILOT		09/02→07/08

LEXUS
IS C (GSE2_)		04/09→
IS II (GSE2_, ALE2_, USE2_)		08/05→03/13
LX (URJ201)		08/07→
RX (GGL1_, GYL1_, AGL1_)		12/08→10/15

MAZDA
CX-3 (DK)		01/15→

SUBARU
BRZ		06/12→

TOYOTA
GT 86 Coupe (ZN6_)		03/12→
IQ (KPJ1_, NGJ1_, KGJ1_, NUJ1_)		11/08→
LAND CRUISER 150 (KDJ15_, GRJ15_)		07/09→
LAND CRUISER 200 (VDJ2_, UZJ2_)		08/07→
MATRIX (ZZE13_)		01/02→12/07
VENZA (GGV1_, AGV1_)		11/08→

AHL60

BMW
X5 (F15, F85)		06/12→
X6 (F16, F86)		08/14→

CHEVROLET
CAMARO ('09)		02/09→12/15
CAMARO Convertible ('11)		01/11→

CITROËN
C-CROSSER (EP_)		02/07→
C-CROSSER ENTERPRISE		01/09→

HONDA
ACCORD VIII (CP)		09/07→
ACCORD VIII (CU)		06/08→
ACCORD VIII Estate		07/08→
PILOT		09/02→07/08

HYUNDAI
GRANDEUR (HG)		01/11→
i20 (GB)		11/14→
i20 (PB, PBT)		08/08→
i20 ACTIVE (IB, GB)		09/15→
i20 Coupe		05/15→

LANCIA
THEMA (LX_)		09/11→

LAND ROVER
RANGE ROVER IV (LG_)		08/12→
RANGE ROVER SPORT (LW_)		04/13→

LEXUS
GS (GRS19_, UZS19_, URS19_)		01/05→11/11
IS III (GSE3_, AVE3_)		04/13→
LFA (LFA10_)		12/10→11/12
LS (UVF4_, USF4_)		04/06→
LX (URJ201)		08/07→
RC (AVC1_, GSC1_, USC1_)		08/14→

MAZDA
3 (BM)		09/13→
3 Saloon (BM)		09/13→
6 (GH)		08/07→12/13
6 Estate (GH)		12/07→07/13
6 Estate (GJ, GH)		12/12→
6 Hatchback (GH)		08/07→07/13
6 Saloon (GJ, GH)		12/12→
CX-5 (KE, GH)		11/11→

MITSUBISHI
ASX (GA_W_)		01/10→
ASX Van (GA_W_)		06/10→
OUTLANDER II (CW_W)		11/06→12/12
OUTLANDER II Van (CW_W)		12/06→11/12

NISSAN
370 Z Coupe (Z34)		01/09→
370 Z Roadster (Z34)		01/09→
NOTE (E12)		09/12→
TEANA I (J31)		02/03→09/08

...AHL60

OPEL
INSIGNIA		07/08→
INSIGNIA A Country Tourer (G09)		07/08→03/17
INSIGNIA B Country Tourer (Z18)		06/17→
INSIGNIA B Grand Sport (Z18)		03/17→
INSIGNIA B Sports Tourer (Z18)		03/17→
INSIGNIA Estate		07/08→03/17
INSIGNIA Saloon		07/08→

PEUGEOT
4007 (GP_)		02/07→

SAAB
9-5 (YS3G)		01/10→01/12

SSANGYONG
TIVOLI		01/15→
TURISMO		08/13→
XLV Closed Off-Road Vehicle		04/16→

SUBARU
FORESTER (SH)		01/08→
IMPREZA Hatchback (GR, GH, G3)		03/07→05/14
IMPREZA Saloon (GR)		03/07→
LEGACY V (BM, BR)		05/09→
LEGACY V Estate (BM, BR)		06/08→12/14
OUTBACK (BM, BR)		09/09→

SUZUKI
KIZASHI (FR)		10/10→
VITARA (LY)		02/15→

TOYOTA
CAMRY Saloon (_XV4_)		01/06→12/14
IST (NCP6_)		04/02→07/07
LAND CRUISER 150 (KDJ15_, GRJ15_)		07/09→
LAND CRUISER 200 (VDJ2_, UZJ2_)		08/07→
RAV 4 III (ACA3_, ACE_, ALA3_, GSA3_, ZSA3_)		06/05→
URBAN CRUISER (NSP1_, NLP1_, ZSP1_, NCP11_)		07/07→

AHL65

CITROËN
C-ZERO		10/10→

HONDA
CIVIC IX (FK)		02/12→
CIVIC IX Saloon (FB, FG)		09/11→
CIVIC IX Tourer (FK)		01/14→
CIVIC X Hatchback (FC_, FK)		09/16→
CIVIC X Saloon (FC_)		09/15→
CR-V IV (RE)		01/12→
CR-Z (ZF1)		06/10→
INSIGHT (ZE_)		04/09→
JAZZ III (GE, GG_, GP_)		10/07→
JAZZ IV (GK)		09/13→

HYUNDAI
ELANTRA Saloon (AD)		09/15→
GRAND SANTA FÉ		01/13→
i30 (GD)		06/11→
i30 (PDE, PD)		11/16→
i30 Coupe		05/13→
i30 CW (GD)		06/12→
i30 Estate (PDE)		03/17→
i30 FASTBACK (PDE)		06/17→
i40 (VF)		03/12→
i40 CW (VF)		07/11→
IONIQ		03/16→
KONA (OS)		06/17→
SANTA FÉ III (DM)		09/12→
SONATA VI (YF)		01/09→12/15
TUCSON (TLE)		05/15→
VELOSTER (FS)		03/11→

INFINITI
Q60 Coupe		09/16→
Q70 (Y51)		03/13→

JEEP
CHEROKEE (KL)		11/13→

...AHL65

KIA
CEE'D Sportswagon (JD)		09/12→
CEE'D (JD)		05/12→
NIRO		09/16→
OPTIMA II		09/15→
OPTIMA Sportswagon (JF)		09/16→
PRO CEE'D (JD)		03/13→
RIO III (UB)		09/11→
RIO III Saloon (UB)		09/10→
RIO IV (YB, SC)		01/17→
RIO IV Saloon (SC, FB)		07/17→
SORENTO III (UM)		01/15→
SPORTAGE (QL)		09/15→
STINGER (CK)		06/17→
STONIC (YB)		07/17→

LAND ROVER
DISCOVERY SPORT (LC_)		09/14→

LEXUS
CT (ZWA10_)		12/10→
ES (_V6_)		06/12→
GS (GRL1_, GWL1_)		09/11→
RX (GGL1_, GYL1_, AGL1_)		12/08→10/15

MAZDA
CX-7 (ER)		06/06→12/14
CX-9 (TB)		01/07→

MITSUBISHI
OUTLANDER III (GG_W, GF_W, ZJ)		08/12→
OUTLANDER III Van (GF_W, GG_W)		04/13→

NISSAN
LEAF (ZE0)		11/10→
MICRA V (K14)		12/16→
MURANO I (Z50)		08/03→09/08
MURANO II (Z51)		10/07→09/14
MURANO III (Z52)		10/14→
QASHQAI II (J11, J11_)		11/13→
X-TRAIL (T32_)		10/13→

PEUGEOT
ION		11/10→

RENAULT
KADJAR		06/15→
KOLEOS II		08/16→

SUBARU
FORESTER (SJ)		11/12→
LEVORG		03/15→
OUTBACK (BS)		10/14→
WRX Hatchback (GP)		10/11→12/12
WRX Saloon (GJ)		07/11→
XV		12/11→

SUZUKI
SX4 S-Cross		08/13→

TOYOTA
AURIS (ZWE18_, NZE18_, ZRE18_)		10/12→
AURIS TOURING SPORTS (ADE18_, ZWE18_, ZRE18_)		07/13→
AURIS VAN Box (NDE18_)		03/13→
CAMRY Saloon (_V5_)		09/11→
COROLLA Saloon (E15_)		10/06→
PREVIA III (_R2_, _R5_)		10/05→
PRIUS (ZVW3_)		04/09→
PRIUS PLUS (ZVW4_)		05/11→
RAV 4 IV (WWA4_, AVA4_, ZSA4_, ALA4_)		12/12→
SIENNA (ASL3_, GSL3_)		01/10→
VENZA (GGV1_, AGV1_)		11/08→
VERSO (_AUR2_, WAR2_, _ZGR2_)		04/09→

AP23

NISSAN
MICRA V (K14)		12/16→

OPEL
ASTRA H GTC (L08)		03/05→10/10
CROSSLAND X (P17)		03/17→

PEUGEOT
308 II		09/13→

...AP23

RENAULT
KADJAR 06/15→
KOLEOS II 08/16→
MEGANE II (BM0/1_, CM0/1_) 07/01→10/12
TALISMAN Grandtour 03/16→

SMART
FORFOUR Hatchback (453) 07/14→

AP25B

CITROËN
C4 AIRCROSS 08/10→

FIAT
SEDICI (FY_) 06/06→10/14

HONDA
HR-V (RU) 11/14→

INFINITI
QX56 01/10→

MAZDA
CX-3 (DK) 01/15→

MINI
MINI CLUBMAN (F54) 11/14→

MITSUBISHI
ASX (GA_W_) 01/10→
ASX Van (GA_W_) 06/10→

NISSAN
LEAF (ZE0) 11/10→

OPEL
AGILA (B) (H08) 04/08→

PEUGEOT
4008 05/12→

SUZUKI
SPLASH 01/08→
SWIFT III (MZ, EZ) 02/05→
SWIFT IV (FZ, NZ) 10/10→
SX4 (EY, GY) 06/06→
SX4 S-Cross 08/13→
VITARA (LY) 02/15→

AP26

CHEVROLET
AVEO Hatchback (T300) 03/11→

DACIA
DOKKER 11/12→
DOKKER Express 12/12→

RENAULT
GRAND SCÉNIC II (JM0/1_) 04/04→
MEGANE II Estate (KM0/1_) 08/03→08/12
MODUS / GRAND MODUS (F/JP0_) 09/04→
SCÉNIC II (JM0/1_) 06/03→

SMART
FORTWO Coupe (451) 01/07→

AP28

ABARTH
500 (312_) 01/08→

BMW
i3 (I01) 08/13→

CHRYSLER
DELTA 08/11→

CITROËN
C2 (JM_) 09/03→
C2 ENTERPRISE 04/09→
C3 III (SX) 07/16→
C3 Picasso 02/09→
C4 II (B7) 11/09→
C5 I Break (DE_) 06/01→08/04
C5 II Break (RE_) 09/04→
DS3 11/09→07/15
DS4 04/11→07/15
DS5 11/11→07/15

DACIA
DUSTER 10/17→
LODGY 03/12→
LOGAN MCV II 02/13→

...AP28

DACIA
SANDERO II 10/12→

FIAT
500 (312_) 10/07→
500X (334_) 09/14→
500L (199_) 09/12→
BRAVO II (198_) 11/06→
BRAVO Van (198_) 03/08→06/14
PANDA (312_, 319_) 02/12→
PANDA VAN (312_) 02/12→

FORD
KA 01/08→
KA (RU8) 10/08→

LANCIA
DELTA III (844_) 08/08→08/14

MERCEDES-BENZ
B-CLASS (W245) 03/05→11/11
C-CLASS T-Model (S204) 08/07→08/14

MINI
MINI (R50, R53) 06/01→09/06
MINI (R56) 11/05→11/13
MINI COUNTRYMAN (R60) 01/10→10/16

OPEL
ASTRA CLASSIC Estate (A04) 01/09→
ASTRA CLASSIC Hatchback (A04) 01/09→
ASTRA G Box (F70) 01/99→04/05
ASTRA G CLASSIC Caravan (F35) 03/04→07/09
ASTRA G Estate (F35_) 02/98→12/09
ASTRA H (L48) 01/04→05/14
ASTRA H Box (L70) 02/04→12/13
ASTRA H Estate (L35) 08/04→05/14
GRANDLAND X (A18) 06/17→

PEUGEOT
308 SW 09/07→
407 (6D_) 05/04→
407 SW (6E_) 05/04→
2008 03/13→
5008 06/09→

RENAULT
CAPTUR 06/13→
KAPTUR (H5_) 03/16→
LOGAN II Estate (K8_) 12/13→
SANDERO/STEPWAY II 11/13→
ZOE 06/12→

SAAB
9-3 Estate (YS3F) 03/05→02/15

AP28A

KIA
RIO III (UB) 09/11→
SORENTO II (XM) 11/09→
SOUL (AM) 01/09→
SOUL II (PS) 02/14→
STONIC (YB) 07/17→

SUZUKI
ALTO (HA25, HA35) 01/09→

AP29

CITROËN
C1 (PM_, PN_) 06/05→09/14

DODGE
NITRO 09/06→12/12

PEUGEOT
107 06/05→

RENAULT
TWINGO I (C06_) 03/93→10/12
TWINGO I Box (S06_) 03/93→06/12

TOYOTA
AYGO (WNB1_, KGB1_) 02/05→
YARIS (SCP1_, NLP1_, NCP1_) 01/99→12/05

AP30

ABARTH
GRANDE PUNTO (199_) 12/07→12/12
PUNTO (199_) 03/12→
PUNTO EVO (199_) 07/08→02/12

...AP30

ALFA ROMEO
MITO (955_) 08/08→

CITROËN
C3 II 11/09→

FIAT
GRANDE PUNTO (199_) 10/05→
GRANDE PUNTO Van (199_) 10/05→06/13
PUNTO (199_) 03/12→
PUNTO EVO (199_) 07/08→
PUNTO EVO Van (199_) 03/09→02/12
PUNTO Van (199_) 02/06→

FORD
B-MAX (JK) 10/12→
B-MAX Van 10/12→
C-MAX II (DXA/CB7, DXA/CEU) 04/10→
C-MAX II Van 12/10→
GRAND C-MAX (DXA/CB7, DXA/CEU) 12/10→
GRAND C-MAX Van 12/10→

HONDA
CIVIC VII Hatchback (EU, EP, EV) 03/99→02/06

HYUNDAI
i20 (GB) 11/14→
i20 ACTIVE (IB, GB) 09/15→
i20 Coupe 05/15→
ix20 (JC) 11/10→

JAGUAR
XF SPORTBRAKE (CC9_) 09/12→04/14

KIA
VENGA (YN) 02/10→

MERCEDES-BENZ
A-CLASS (W169) 09/04→06/12
E-CLASS T-Model (S212) 08/09→
GL-CLASS (X164) 09/06→
GL-CLASS (X166) 07/12→
GLK-CLASS (X204) 06/08→
GLS (X166) 11/15→
M-CLASS (W164) 07/05→12/11
M-CLASS (W166) 06/11→02/15
R-CLASS (W251, V251) 01/05→

NISSAN
JUKE (F15) 06/10→
MICRA III (K12) 03/02→06/10
QASHQAI II (J11, J11_) 11/13→
X-TRAIL (T32_) 10/13→

OPEL
CORSA D 07/06→
CORSA D Van 07/06→
INSIGNIA A Country Tourer (G09) 07/08→03/17
INSIGNIA Estate 07/08→03/17

PEUGEOT
207 SW (WK_) 02/07→
308 (4A_, 4C_) 09/07→
508 SW 11/10→
1007 (KM_) 04/05→
3008 06/09→12/16

RENAULT
AVANTIME (DE0_) 09/01→05/03
CLIO Grandtour (KR0/1_) 02/08→
CLIO II (BB0/1/2_, CB0/1/2_) 09/98→
CLIO II Box (SB0/1/2_) 09/98→
CLIO III (BR0/1, CR0/1) 01/05→
DUSTER (HS_) 01/11→
MODUS / GRAND MODUS (F/JP0_) 09/04→
THALIA I (LB0/1/2_) 02/98→
TWINGO II (CN0_) 03/07→

AP30A

CITROËN
C1 II 04/14→

DAIHATSU
CHARADE (L2_) 03/03→
CUORE VI (L251, L250_, L260_) 03/03→
CUORE VII (L275_, L285_, L276_) 12/06→

...AP30A

DAIHATSU
MATERIA (M4_) 10/06→
TERIOS (J2_) 11/05→
TREVIS 06/06→
YRV (M2) 02/01→

DODGE
JOURNEY 06/08→

FIAT
FREEMONT (JC_, JF_) 08/11→

HYUNDAI
i20 (PB, PBT) 08/08→

JEEP
GRAND CHEROKEE III (WH, WK) 10/04→10/11
GRAND CHEROKEE IV (WK, WK2) 06/10→

MAZDA
3 (BM) 09/13→
5 (CR19) 02/05→12/10
5 (CW) 09/10→
6 Estate (GJ, GH) 12/12→
6 Station Wagon (GY) 08/02→12/07

MITSUBISHI
MIRAGE / SPACE STAR Hatchback (A0_A, A05A, LA) 01/12→
SPACE STAR Hatchback (A0_A) 05/12→

PEUGEOT
108 05/14→

SUZUKI
BALENO 02/16→
CELERIO 02/14→
GRAND VITARA II (JT) 04/05→

TOYOTA
AURIS (NRE15_, ZZE15_, ADE15_, ZRE15_, NDE15_) 10/06→09/12
AVENSIS Estate (T25, CDT25_, ZZT25_) 04/03→11/08
AVENSIS Estate (ZRT27, ADT27)
AYGO (PAB4_, KGB4_) 05/14→
LAND CRUISER 150 (KDJ15_, GRJ15_) 07/09→
LAND CRUISER 200 (VDJ2_, UZJ2_) 08/07→
PREVIA III (_R2_, _R5_) 10/05→
RAV 4 II (CLA2_, XA2_, ZCA2_, ACA2_) 06/00→11/05
RAV 4 III (ACA3_, ACE_, ALA3_, GSA3_, ZSA3_) 06/05→
RAV 4 IV (WWA4_, AVA4_, ZSA4_, ALA4_) 12/12→
VERSO (_AUR2_, WAR2_, _ZGR2_) 04/09→
YARIS (NHP13_, NSP13_, NCP13_, KSP13_, NLP13_) 12/10→
YARIS (SCP9_, NSP9_, KSP9_, NCP9_, ZSP9_) 01/05→

AP30B

BMW
1 (F20) 11/10→
1 (F21) 12/11→
2 Active Tourer (F45) 11/13→
X5 (F15, F85) 06/12→

CITROËN
C-CROSSER (EP_) 02/07→
C-CROSSER ENTERPRISE 01/09→
C-ZERO 10/10→

HONDA
ACCORD VII Tourer (CM) 04/03→05/08
ACCORD VIII Estate 07/08→
CIVIC IX Tourer (FK) 01/14→

MITSUBISHI
GRANDIS (NA_W) 03/03→12/11
i (HA_) 01/06→
OUTLANDER I (CU_W) 03/01→12/06
OUTLANDER III (GG_W, GF_W, ZJ) 08/12→
OUTLANDER III Van (GF_W, GG_W) 04/13→

NISSAN
CUBE (Z12) 09/07→

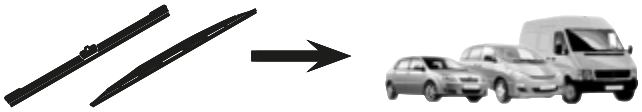

...AP30B

NISSAN
MICRA IV (K13) 05/10→
MURANO III (Z52) 10/14→
NOTE (E11) 01/05→06/12
NOTE (E12) 09/12→
PATHFINDER III (R51) 01/05→

PEUGEOT
4007 (GP_) 02/07→
ION 11/10→

SUBARU
IMPREZA Hatchback (GP) 10/11→
XV
XV 12/11→

SUZUKI
IGNIS III (MF) 10/16→
LIANA Hatchback 06/01→

AP30C

OPEL
ASTRA GTC J 10/11→
ASTRA J 12/09→
ASTRA J Sports Tourer 10/10→

AP30V

VW
FOX (5Z1, 5Z3) 10/03→

AP31

CHEVROLET
MATIZ (M200, M250) 03/05→

CITROËN
C4 Grand Picasso II 09/13→
C4 I (LC_) 11/04→07/11
C4 Picasso II 02/13→

DAIHATSU
CHARADE 05/11→

FORD
FIESTA VI 06/08→
FIESTA VI Van 01/09→
FIESTA VII 01/17→
FOCUS II Estate (DA_) 07/04→09/12
FOCUS III 07/10→
FOCUS III Box Body / Estate 02/12→
FOCUS III Box Body / Hatchback 01/11→
FOCUS III Turnier 07/10→
FOCUS III Van 02/12→
MONDEO IV Turnier (BA7) 03/07→01/15

KIA
PICANTO (BA) 04/04→

NISSAN
QASHQAI / QASHQAI +2 I (J10, JJ10) 12/06→12/13

OPEL
CORSA E 09/14→
CORSA E Van 09/14→

PEUGEOT
308 SW II 03/14→
3008 SUV (M_) 05/16→
5008 II 12/16→

RENAULT
ESPACE V 02/15→
GRAND SCÉNIC III (JZ0/1_) 02/09→
GRAND SCÉNIC IV (R9_) 09/16→
SCÉNIC III (JZ0/1_) 02/09→
SCÉNIC IV (J9_) 09/16→
TWINGO III 09/14→

TOYOTA
YARIS (SCP9_, NSP9_, KSP9_, NCP9_, ZSP9_) 01/05→

VOLVO
V60 07/10→

AP34

BMW
X3 (E83) 01/03→12/11

CITROËN
C4 Grand Picasso I (UA_) 10/06→

...AP34

CITROËN
C4 Picasso I (UD_) 10/06→10/13

FORD
FOCUS II (DA_) 07/04→09/12
GALAXY (WA6) 05/06→06/15
KUGA I 03/08→
S-MAX (WA6) 05/06→12/14

JAGUAR
X-TYPE Estate (CF1_) 09/03→12/09

MAZDA
3 (BK) 10/03→12/09

MERCEDES-BENZ
CITAN Box (415) 11/12→
CITAN Combi (415) 11/12→
CITAN Mixto (415) 11/12→

MITSUBISHI
COLT VI (Z3_A, Z2_A) 10/02→12/12

OPEL
ADAM 10/12→

PEUGEOT
206 SW (2E/K) 07/02→
406 Break (8E/F) 10/96→10/04

RENAULT
KANGOO BE BOP (KW0/1_) 02/09→
KANGOO Express (FW0/1_) 02/08→
KANGOO / GRAND KANGOO (KW0/1_) 02/08→
LAGUNA III Grandtour (KT0/1) 10/07→
MEGANE III Coupe (DZ0/1_) 11/08→
MEGANE III Hatchback (BZ0_) 11/08→

ROVER
75 Tourer (RJ) 08/01→06/06

SMART
FORFOUR (454) 01/04→06/06

AP35

ALFA ROMEO
GIULIETTA (940_) 04/10→

CITROËN
BERLINGO (B9) 04/08→
BERLINGO Box (B9) 04/08→
C3 I (FC_) 02/02→
C8 (EA_, EB_) 07/02→
DISPATCH MPV 01/07→
DISPATCH Van/Box 01/07→
SAXO (S0, S1) 02/96→04/04
XANTIA Break (X2) 01/98→04/03

DACIA
DUSTER 04/10→
DUSTER Box 04/11→
LOGAN EXPRESS (FS_) 03/09→
LOGAN MCV (KS_) 02/07→

FIAT
SCUDO (270_, 272_) 01/07→
SCUDO Box (270_, 272_) 01/07→
STILO Multi Wagon (192_) 01/03→08/08
ULYSSE (179_) 08/02→06/11

FORD
TOURNEO CONNECT / GRAND TOURNEO CONNECT Kombi 09/13→
TOURNEO COURIER Kombi 02/14→
TOURNEO CUSTOM Bus 04/12→
TRANSIT CONNECT Box 02/13→
TRANSIT CONNECT Kombi 02/13→
TRANSIT COURIER Box 02/14→
TRANSIT COURIER Kombi 02/14→
TRANSIT CUSTOM Box 04/12→
TRANSIT CUSTOM Bus 04/12→

LADA
LARGUS Box 03/12→
LARGUS Estate 03/12→

LANCIA
PHEDRA (179_) 09/02→11/10

NISSAN
ALMERA II Hatchback (N16) 01/00→

...AP35

OPEL
ZAFIRA B (A05) 07/05→
ZAFIRA B Van 07/05→

PEUGEOT
106 II (1) 04/96→05/05
206+ (T3E) 01/09→
206 Hatchback (2A/C) 08/98→
208 03/12→
208 Box 10/12→
307 (3A/C) 08/00→
307 Break (3E) 03/02→12/09
307 SW (3H) 03/02→12/09
807 (E) 06/02→
EXPERT Box (VF3A_, VF3U_, VF3X_) 01/07→
EXPERT Tepee (VF3V_) 01/07→
PARTNER Box 04/08→
PARTNER Tepee 04/08→

RENAULT
CLIO III (BR0/1, CR0/1) 01/05→
DUSTER (HS_) 01/11→
ESPACE IV (JK0/1_) 11/02→
LAGUNA II Grandtour (KG0/1_) 03/01→
LOGAN EXPRESS (US_) 04/07→
LOGAN I Estate (KS_) 04/07→
MEGANE I Grandtour (KA0/1_) 03/99→08/03
MEGANE III Grandtour (KZ0/1) 11/08→

AP35A

DAIHATSU
SIRION (M3_) 01/05→

HYUNDAI
ACCENT III (MC) 11/05→12/10
i40 CW (VF) 07/11→
i800 02/08→
iLoad 02/08→
SANTA FÉ II (CM) 10/05→12/12

JEEP
CHEROKEE (KL) 11/13→

KIA
CARENS III (UN) 09/06→
CERATO (LD) 03/04→
RIO II (JB) 03/05→

LEXUS
IS SportCross 10/01→10/05
RX (GGL1_, GYL1_, AGL1_) 12/08→10/15
RX (MHU3_, GSU3_, MCU3_) 02/03→12/08

MAZDA
3 (BL) 12/08→09/14
6 Estate (GH) 12/07→07/13
CX-5 (KE, GH) 11/11→
CX-7 (ER) 06/06→12/14
CX-9 (TB) 01/07→

MITSUBISHI
OUTLANDER II (CW_W) 11/06→12/12
OUTLANDER II Van (CW_W) 12/06→11/12

NISSAN
TIIDA Hatchback 05/04→12/13
TIIDA Hatchback (C11X) 02/06→12/11

TOYOTA
COROLLA (CDE12_, ZZE12_, NDE12_, ZDE12_) 01/01→12/07
COROLLA Estate (_E12J_, _E12T_) 03/01→12/08
COROLLA Verso (ZDE12_, CDE12_) 07/01→07/04

AP35B

HONDA
CR-V III (RE) 06/06→
JAZZ II (GD, GE3) 06/01→12/08
JAZZ III (GE, GG_, GP_) 10/07→
JAZZ IV (GK) 09/13→

INFINITI
EX 09/07→
FX ('08) 07/08→
Q70 (Y51) 03/13→

...AP35B

INFINITI
QX70 08/13→

MAZDA
2 (DE) 07/07→06/15
2 (DL, DJ) 11/14→
2 (DY) 02/03→06/07

MITSUBISHI
LANCER Estate (CS_W) 09/03→12/08
LANCER SPORTBACK (CX_A) 10/07→
PAJERO / SHOGUN (IV) (V8_W, V9_W) 11/06→
PAJERO / SHOGUN Box (IV) (V90, V80) 11/06→

NISSAN
MURANO I (Z50) 08/03→09/08
MURANO II (Z51) 10/07→09/14
NV200 Box 02/10→
NV200 / EVALIA Bus 07/10→
X-TRAIL (T31) 03/07→07/14

SUBARU
FORESTER (SH) 01/08→
FORESTER (SJ) 11/12→
LEGACY IV Estate (BL, BP, B13_) 09/03→12/09
LEVORG 03/15→
OUTBACK (BL, BP) 09/03→06/10
OUTBACK (BM, BR) 09/09→
OUTBACK (BS) 10/14→

AP35C

OPEL
ZAFIRA TOURER C (P12) 10/11→

AP37

LAND ROVER
DISCOVERY I (LJ_) 06/89→10/98
DISCOVERY II (LT_) 10/98→08/04
FREELANDER (LN_) 02/98→10/06

SAAB
9-5 Estate (YS3E) 10/98→12/09
9-7X 06/04→07/12

AP37C

VOLVO
V70 II (SW) 11/99→12/08
XC60 05/08→
XC70 CROSS COUNTRY 10/97→10/07
XC90 I 06/02→12/14

AP38

OPEL
SIGNUM 05/03→12/08
VECTRA C Estate 10/03→

AP40

CHRYSLER
GRAND VOYAGER V (RT) 10/07→

CITROËN
C5 I (DC_) 03/01→03/05
XSARA Box 05/98→08/05
XSARA Break (N2) 10/97→03/10
XSARA PICASSO (N68) 12/99→

DACIA
SANDERO 06/08→

DODGE
CARAVAN ('08) 01/08→

HONDA
ACCORD VI Hatchback (CH) 12/99→12/02

LANCIA
VOYAGER MPV (RT_) 09/11→12/14

MG
EXPRESS Box 03/03→05/05
MG ZR 06/01→04/05

NISSAN
KUBISTAR (X76) 08/03→10/09
KUBISTAR Box (X80) 08/03→
MICRA II (K11) 01/92→12/07
PRIMASTAR Box (X83) 09/02→

...AP40

NISSAN

PRIMASTAR Bus (X83)	03/01→
PRIMERA Estate (WP12)	01/02→

OPEL

ASTRA G CLASSIC Saloon (T98)	03/04→07/09
ASTRA G Hatchback (F48_, F08_)	02/98→12/09
ASTRA G Saloon (F69_)	09/98→12/09
COMBO Box Body / Estate	10/01→
COMBO Tour	10/01→
CORSA C (F08, F68)	09/00→12/09
CORSA C Box (F08, W5L)	09/00→
MERIVA	05/03→05/10
MERIVA B	06/10→
VECTRA C	04/02→
VECTRA C GTS	08/02→
VIVARO Box	06/14→
VIVARO Box (F7)	08/01→
VIVARO Combi	06/14→
VIVARO Combi (J7)	08/01→
ZAFIRA A (F75_)	04/99→06/05

PEUGEOT

306 Box Body / Hatchback	04/93→08/01
306 Hatchback (7A, 7C, N3, N5)	01/93→10/03

RENAULT

CLIO I (B/C57_, 5/357_)	05/90→09/98
CLIO I Box (S57_)	01/91→09/98
ESPACE III (JE0_)	11/96→10/02
KANGOO (KC0/1_)	08/97→
KANGOO Express (FC0/1_)	08/97→
MEGANE I Coach (DA0/1_)	03/96→08/03
MEGANE Scenic (JA0/1_)	10/96→12/01
SANDERO/STEPWAY I	11/07→
SCÉNIC I (JA0/1_)	09/99→10/03
TRAFIC II Box (FL)	03/01→
TRAFIC II Bus (JL)	03/01→
TRAFIC III Box	05/14→
TRAFIC III Bus	05/14→
VEL SATIS (BJ0_)	06/02→

ROVER

25 (RF)	09/99→06/06
STREETWISE	08/03→05/05

AP40A

TOYOTA

AVENSIS (T25_)	04/03→11/08
AVENSIS VERSO (_CLM2_, _ACM2_)	08/01→11/09
LAND CRUISER (LJ12_, KZJ12_, TRJ12_, KDJ12_, GRJ12_)	09/02→08/10
PREVIA (MCR3_, ACR3_, CLR3_)	02/00→01/06
YARIS VERSO (_NLP2_, _NCP2_)	08/99→09/05

AP40D

PEUGEOT

207 (WA_, WC_)	02/06→
207 Van	04/07→

AS45

AUDI

COUPE (81, 85)	07/80→10/88
QUATTRO (85)	07/80→07/91

BMW

5 (E28)	06/80→12/87
7 (E23)	05/77→04/88

CITROËN

C2 (JM_)	09/03→
C2 ENTERPRISE	04/09→
C3 I (FC_)	02/02→
C5 I (DC_)	03/01→03/05
C5 I Break (DE_)	06/01→08/04

DAEWOO

ARANOS	01/95→11/97
CIELO	06/94→12/07
NEXIA (KLETN)	02/95→08/97
NEXIA Saloon	07/08→
NEXIA Saloon (KLETN)	02/95→06/08

...AS45

DAIHATSU

COPEN (L880_, L881_)	03/02→09/12
CUORE IV (L501)	08/94→12/99
CUORE V (L5)	11/96→10/98
CUORE V (L7_)	10/98→05/03
MIRA III	08/90→04/95

FORD

CORTINA ('80)	07/79→07/82
CORTINA ('80) Estate	07/79→07/82
ESCORT '86 Express (AVF)	02/86→07/90
ESCORT III (GAA)	09/80→07/86
ESCORT III Convertible (ALD)	09/83→12/85
ESCORT III Estate (AWA)	09/80→12/85
ESCORT IV (GAF, AWF, ABFT)	03/83→10/90
ESCORT IV Convertible (ALF)	01/86→07/90
ESCORT IV Estate (AWF, AVF)	10/85→10/90
ORION I (AFD)	07/83→03/86
ORION II (AFF)	12/85→07/90
P 100 I	04/82→09/87
RANGER (ER, EQ)	04/97→06/06
RANGER (ET)	01/05→07/12

HONDA

ACCORD III (CA)	11/85→12/89
CIVIC III Hatchback (AL, AJ, AG, AH)	10/83→10/87
CIVIC III Saloon (AM, AK, AU)	10/83→10/87
CONCERTO (HW, MA)	08/89→10/96
CONCERTO Saloon (HWW)	08/89→05/95
INTEGRA (DA)	10/85→08/93
LEGEND I (HS, KA)	01/86→03/91
LEGEND I Coupe (KA3)	10/87→03/91

HYUNDAI

H100 Bus (P)	07/93→10/04
H100 Platform/Chassis	01/04→
SONATA II (Y-2)	09/88→12/93

ISUZU

MIDI Box (98000N)	06/88→07/96
MIDI Bus (94000, 98000)	06/88→07/96
MIDI Van (94000, 98000)	06/88→07/96
PIAZZA (JR_)	06/81→12/90

JEEP

COMMANDER (XK)	09/05→12/10

KIA

PRIDE (DA)	01/90→12/11
PRIDE Estate	08/98→05/01

LANCIA

PRISMA (831_)	01/83→02/92

LAND ROVER

DISCOVERY I (LJ_)	06/89→10/98
RANGE ROVER I (AE, AN, HAA, HAB, HAM, HBM, RE, RN)	10/69→04/96

MASERATI

BORA	01/71→12/83
KHAMSIN	01/72→12/82
MERAK	05/75→12/83

MAZDA

121 I (DA)	03/87→11/90
323 III (BF)	08/85→11/91
323 III Hatchback (BF)	08/85→08/93
323 III Station Wagon (BW)	01/86→10/98
B-SERIE (UF)	01/85→12/99
B-SERIE (UN)	11/98→11/06
MX-5 I (NA)	09/89→04/98
MX-5 II (NB)	01/98→10/05
MX-5 III (NC)	03/05→12/14

MG

EXPRESS Box	03/03→05/05
MG ZR	06/01→04/05

MINI

MINI (F55)	09/13→
MINI (F56)	04/13→
MINI (R50, R53)	06/01→09/06
MINI (R56)	11/05→11/13
MINI CLUBMAN (R55)	10/06→06/14
MINI Convertible (F57)	11/14→
MINI Convertible (R52)	07/04→11/07

...AS45

MINI

MINI Convertible (R57)	10/07→06/15

MITSUBISHI

PAJERO / SHOGUN PININ (H6_W, H7_W)	03/99→06/07

NISSAN

MICRA I (K10)	12/82→11/92
PATROL GR IV (Y60, GR)	08/87→02/98
PATROL III/1 Hardtop (K160)	11/79→02/89
PATROL III/1 Platform/Chassis (MQ, MK, GQ)	06/80→12/97
PATROL III/1 Station Wagon (W160)	11/79→02/89
PATROL III/2 Hardtop (K260)	10/84→04/98
PATROL III/2 Station Wagon (W260)	08/88→04/98
SKYLINE Coupe (R32)	03/89→01/95
SKYLINE Coupe (R33)	07/93→07/00
STANZA (T11)	08/81→12/85
STANZA Hatchback (T11)	08/81→12/85
TERRANO I (WD21)	07/86→02/96
URVAN Box (E23)	07/80→11/98
URVAN Box (E24)	06/86→05/97
URVAN Bus (E23)	07/80→11/88
URVAN Bus (E24)	06/86→05/97

OPEL

ASCONA B (81_, 86_, 87_, 88_)	09/75→08/81
ASCONA C (81_, 86_, 87_, 88_)	09/81→10/88
ASCONA C Hatchback (84_, 89_)	09/81→08/88
ASTRA F (56_, 57_)	09/91→09/98
ASTRA F CLASSIC Estate	01/98→01/05
ASTRA F CLASSIC Hatchback	01/98→08/02
ASTRA F CLASSIC Saloon	01/98→08/02
ASTRA F Convertible (53_B)	03/93→03/01
ASTRA F Estate (51_, 52_)	09/91→01/98
ASTRA F Hatchback (53_, 54_, 58_, 59_)	09/91→01/98
ASTRA F Van (55_)	10/91→01/99
CAMPO (TF_)	08/87→06/02
COMBO (71_)	07/94→10/01
CORSA B (73_, 78_, 79_)	03/93→12/02
CORSA B Box (73_)	08/99→09/00
CORSA B Estate (F35)	01/99→12/02
KADETT E (39_, 49_)	09/84→12/93
KADETT E Box (37_, 47_)	08/84→09/93
KADETT E Combo (38_, 48_)	01/86→07/94
KADETT E Convertible (43B_)	10/86→02/93
KADETT E Estate (35_, 36_, 45_, 46_)	09/84→08/91
KADETT E Hatchback (33_, 34_, 43_, 44_)	09/84→08/91
MANTA B (58_, 59_)	09/75→08/88
MANTA B CC (53_, 55_)	09/75→08/88
MONZA A (22_)	02/78→08/86
REKORD E (17_-19_, 11_, 14_, 16_)	08/77→08/86
REKORD E Estate (61_, 66_, 67_)	08/77→08/86
TIGRA (95_)	07/94→12/00

PEUGEOT

205 Box	02/83→05/97
205 I (741A/C)	02/83→10/87
205 I Convertible (741B, 20D)	04/86→11/95
205 II (20A/C)	01/87→12/00
309 I (10C, 10A)	10/85→12/89
309 II (3C, 3A)	07/89→12/93
505 (551A)	05/79→10/96
505 Break (551D)	04/82→11/95
604 (561A_)	09/75→07/87

PORSCHE

968	06/91→11/95
968 Convertible	06/91→11/95

RENAULT

20 (127_)	10/75→12/83
30 (127_)	02/75→03/86
CLIO I (B/C57_, 5/357_)	05/90→09/98

...AS45

RENAULT

CLIO I Box (S57_)	01/91→09/98
EXPRESS Pickup	07/95→10/99
RAPID / EXTRA Box (F40_, G40_)	07/85→11/01
SUPER 5 (B/C40_)	10/84→12/96
SUPER 5 Box (S40_)	10/84→12/96

ROVER

25 (RF)	09/99→06/06
200 (RF)	11/95→11/00
200 (XH)	03/85→09/89
200 Coupe (XW)	10/92→06/99
200 Hatchback (XW)	10/89→10/95
400 (XW)	04/90→04/95
400 Tourer (XW)	09/93→11/98
CABRIOLET (XW)	04/90→11/99
COUPE	03/96→11/99
STREETWISE	08/03→05/05

SKODA

FAVORIT (781)	05/89→09/94
FAVORIT Forman (785)	06/88→06/95

SSANGYONG

KORANDO (K4)	12/88→05/97
KORANDO (K4) Open Off-Road Vehicle	12/88→05/97
KORANDO (KJ)	12/96→11/06
KORANDO Cabrio (KJ)	12/96→11/06

SUZUKI

CAPPUCINO (EA)	02/92→08/98
JIMNY (FJ)	07/98→
JIMNY Open Off-Road Vehicle (SN)	01/98→

TOYOTA

LAND CRUISER 80 (_J8_)	01/90→02/98
LAND CRUISER Pickup (_J7_)	11/84→

VW

GOLF II (19E, 1G1)	08/83→12/92
JETTA II (19E, 1G2, 165)	08/83→12/92
PASSAT (32B)	11/79→06/89
PASSAT Saloon (32B)	08/84→06/89
PASSAT Variant (32B)	08/80→06/89
SANTANA (32B)	08/81→12/85
SCIROCCO (53)	02/74→07/80

AS48

DAEWOO

ESPERO (KLEJ)	10/91→09/99
LANOS (KLAT)	05/97→
LANOS Saloon (KLAT)	02/97→

DAIHATSU

CHARADE IV (G200, G202)	01/93→09/00
CHARADE IV Saloon (G203)	03/93→01/01
EXTOL Box	07/00→
EXTOL Bus (S22_, S23_)	07/00→11/11
SIRION (M1)	04/98→04/05

DODGE

NITRO	09/06→12/12

FIAT

BARCHETTA (183_)	03/95→05/05
CINQUECENTO (170_)	07/91→07/99
SEICENTO / 600 (187_)	01/98→01/10
SEICENTO / 600 Van (287_)	01/98→01/10
TIPO (160_)	07/87→10/97

FORD

FIESTA Box (F3L, F5L)	07/91→02/96
FIESTA Box (J5_, J3_)	02/96→
FIESTA Box (JV_)	05/98→08/03
FIESTA III (GFJ)	01/89→01/97
FIESTA IV (JA_, JB_)	08/95→09/02
KA (RB_)	09/96→11/08
KA Van (RB)	05/02→05/05
MAVERICK	02/01→
PUMA (EC_)	03/97→06/02
STREET KA (RL2)	03/03→07/05

HONDA

CIVIC II Shuttle (EE)	01/88→02/95

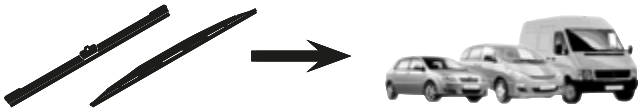

...AS48

HONDA

CIVIC IV Hatchback (EC, ED, EE)	09/87→10/93
CIVIC IV Saloon (ED)	09/87→10/93
CR-V I (RD)	10/95→02/02
CRX I (AF, AS)	10/83→10/87
CRX II (ED, EE)	10/87→02/92
PRELUDE III (BA)	04/86→11/96

HYUNDAI

S COUPE (SLC)	02/90→05/96

JEEP

CHEROKEE (KJ)	03/01→01/08
LIBERTY	01/08→

MAZDA

121 III (JASM, JBSM)	03/96→04/03
626 III (GD)	06/87→05/92
626 III Coupe (GD)	06/87→05/92
626 III Hatchback (GD)	06/87→05/92
626 III Station Wagon (GV)	09/87→10/98
929 III (HC)	05/87→06/91
TRIBUTE (EP)	03/00→05/08

MERCEDES-BENZ

S-CLASS (W116)	08/72→07/80
SL (R107)	05/71→12/89
SL Coupe (C107)	01/72→08/85

MITSUBISHI

GALANT IV Saloon (E3_A)	11/87→03/93
PAJERO / SHOGUN (II) (V3_W, V2_W, V4_W)	12/90→10/99
PAJERO / SHOGUN Soft Top (II) (V2_W, V4_W)	12/90→04/00

NISSAN

BLUEBIRD (T72 , T12)	12/85→12/90
BLUEBIRD (U11)	11/83→05/90
BLUEBIRD Hatchback (T72, T12)	12/85→11/92
BLUEBIRD Saloon (910)	01/80→06/86
BLUEBIRD Station Wagon (WU11)	11/83→12/90
CHERRY III (N12)	04/82→10/87
LAUREL (JC32)	11/84→06/90
PATROL GR V Wagon (Y61)	06/97→
PICK UP II (D21)	09/85→02/98
PICK UP III (D22)	01/97→
PRAIRIE (M10, NM10)	12/82→10/88
PRAIRIE PRO (M11)	10/88→10/98
URVAN Box (E24)	06/86→05/97
URVAN Bus (E24)	06/86→05/97

OPEL

CALIBRA A (85_)	06/90→07/97
FRONTERA A (5_MWL4)	03/92→10/98
FRONTERA A Sport (5_SUD2)	03/92→10/98
FRONTERA B (6B_)	10/98→09/02
OMEGA A (16_, 17_, 19_)	09/86→05/94
OMEGA A Estate (66_, 67_)	09/86→05/94
SENATOR B (29_)	09/87→09/93
VECTRA A (86_, 87_)	08/88→12/95
VECTRA A Hatchback (88_, 89_)	04/88→12/95
VECTRA B (36_)	09/95→04/02
VECTRA B Estate (31_)	11/96→07/03
VECTRA B Hatchback (38_)	10/95→07/03

ROVER

800 (XS)	10/86→02/99
800 Hatchback (XS)	10/86→02/99

SEAT

AROSA (6H)	05/97→06/04

SUZUKI

ALTO (HA11)	10/93→09/98
ALTO (HA12, HA23)	10/97→09/04
GRAND VITARA I (FT)	03/98→08/06
GRAND VITARA I Convertible (GT)	03/98→09/05
GRAND VITARA II (JT)	04/05→
VITARA (ET)	12/03→12/05
VITARA Cabrio (ET)	12/03→12/05

TOYOTA

LAND CRUISER 90 (_J9_)	04/95→
LAND CRUISER 100 (FZJ1_, UZJ1_)	01/98→08/07

...AS48

VW

CORRADO (53I)	08/87→12/95
POLO (6N1)	10/94→10/99
POLO (6N2)	10/99→10/01
POLO Box (6NF)	09/94→12/99
SCIROCCO (53B)	08/80→07/92

AS51

ALPINA

B3 (E30)	09/87→06/92
B3 Convertible (E30)	09/87→06/92
B3 Estate (E30)	09/87→06/92
B6 (E30)	11/83→12/90
C1 (E30)	08/83→06/88
C2 (E30)	07/85→03/88
C2 Convertible (E30)	02/86→07/87

BMW

3 (E30)	09/82→03/92
3 Convertible (E30)	12/85→10/93
3 Touring (E30)	07/87→10/94
Z1	06/88→06/91
Z3 (E36)	10/95→01/03
Z3 Coupe (E36)	04/97→06/03

CHEVROLET

BLAZER S10 ('93)	10/93→09/05
BLAZER S10 ('96)	08/96→12/10

CHRYSLER

CROSSFIRE	07/03→12/08
CROSSFIRE Roadster	05/04→12/08
PT CRUISER (PT_)	06/00→12/10
PT CRUISER Convertible	06/00→12/10

CITROËN

C25 Box (280_, 290_)	07/81→03/94
C25 Bus (280_, 290_)	07/81→02/94
C25 Platform/Chassis (280_, 290_)	07/81→03/94
C35 Box	11/73→01/94
C35 Bus	11/73→01/94
C35 Pickup	11/73→01/94
SAXO (S0, S1)	02/96→04/04

DACIA

DUSTER	04/10→
DUSTER Box	04/11→

DAEWOO

MUSSO (FJ)	07/98→
NUBIRA (KLAJ)	04/97→
NUBIRA Saloon (KLAJ)	04/97→
NUBIRA Wagon (KLAJ)	04/97→
REXTON (GAB_)	04/02→

DAIHATSU

GRAN MOVE (G3)	10/96→
MATERIA (M4_)	10/06→
SIRION (M3_)	01/05→
TERIOS (J1_)	05/97→10/06
TREVIS	06/06→

FIAT

CROMA (154_)	12/85→12/96
DUCATO Box (280_)	01/82→09/90
DUCATO Box (290_)	03/89→05/94
DUCATO Panorama (280_)	07/82→08/90
DUCATO Panorama (290_)	01/90→05/94
DUCATO Platform/Chassis (280_)	07/82→08/90
DUCATO Platform/Chassis (290_)	03/89→05/94
TALENTO Box (290_)	03/89→03/94
TALENTO Bus (290_)	03/89→03/94
TALENTO Platform/Chassis (290_)	03/89→03/94

FORD

ESCORT '91 Express (AVL)	07/90→12/94
ESCORT '95 Box (AVL)	01/95→06/01
ESCORT CLASSIC (AAL, ABL)	10/98→07/00
ESCORT CLASSIC Turnier (ANL)	02/99→07/00
ESCORT V (GAL)	06/89→12/92
ESCORT V Convertible (ALL)	07/90→12/92
ESCORT V Estate (GAL, AVL)	07/90→12/92

...AS51

FORD

ESCORT VI (GAL)	09/92→09/96
ESCORT VI Convertible (ALL)	01/92→01/95
ESCORT VI Estate (GAL)	09/92→01/95
ESCORT VI Saloon (GAL)	08/93→01/95
ESCORT VII (GAL, AAL, ABL)	01/95→10/02
ESCORT VII Convertible (ALL)	02/95→08/00
ESCORT VII Estate (GAL, ANL)	01/95→10/02
ESCORT VII Saloon (GAL, AFL)	01/95→08/02
GRANADA (III)	04/85→12/94
GRANADA III Estate	05/88→09/94
ORION III (GAL)	01/90→09/96
P 100 II	10/87→12/92
SCORPIO II (GFR, GGR)	10/94→08/98
SCORPIO II Estate (GNR, GGR)	10/94→08/98
SIERRA (GBG, GB4)	01/87→02/93
SIERRA Estate (BNC)	08/82→12/86
SIERRA Estate (BNG)	01/87→02/93
SIERRA Hatchback (GBC)	08/82→02/87
SIERRA Hatchback (GBC, GBG)	01/87→03/93

HONDA

CRX III (EH, EG)	03/92→12/98
ELEMENT	07/02→12/11
HR-V (GH)	03/99→
INSIGHT (ZE)	04/00→12/06
INTEGRA (DC5)	08/01→
INTEGRA Coupe (DC2, DC4)	07/93→11/01
JAZZ II (GD, GE3)	06/01→12/08
JAZZ Saloon	05/03→
LEGEND II (KA7)	01/91→03/96
LEGEND II Coupe (KA8)	01/91→03/96
LEGEND III (KA9)	02/96→
LOGO (GA3)	03/99→03/02
NSX Convertible (NA)	03/95→09/05
NSX Coupe (NA)	06/90→09/05
PRELUDE IV (BB)	12/91→02/97
PRELUDE V (BB)	10/96→04/01

HYUNDAI

AMICA	01/97→
LANTRA I (J-1)	10/90→11/95
LANTRA II (J-2)	06/95→12/00
LANTRA II Wagon (J-2)	06/95→10/00
SONATA III (Y-3)	09/92→12/98

ISUZU

TROOPER	05/98→08/04
TROOPER (UB)	08/91→04/00
TROOPER Open Off-Road Vehicle	04/00→08/04
TROOPER Open Off-Road Vehicle (UB)	08/91→07/98

JEEP

GRAND CHEROKEE I (ZJ)	09/91→04/99

KIA

AVELLA	11/95→12/01
AVELLA Hatchback	11/95→12/01
SPORTAGE (K00)	04/94→08/04

LADA

LARGUS Box	03/12→
LARGUS Estate	03/12→

LANCIA

THEMA (834_)	11/84→07/94
THEMA SW (834_)	03/87→07/94

LDV

CONVOY Box	04/96→04/09
CONVOY Bus	04/96→04/09
CONVOY Platform/Chassis	04/96→04/09
SHERPA Bus (FR)	01/83→09/88

LEXUS

LS (UCF10)	09/89→12/95

MASERATI

BITURBO (70, 77)	06/84→12/94
BITURBO Coupe	12/81→06/93
BITURBO Spider	07/85→12/94
QUATTROPORTE IV	03/94→05/01

MAZDA

121 II (DB)	11/90→05/97
DEMIO (DW)	01/96→07/03

...AS51

MAZDA

MX-6 (GD)	10/87→01/97
MX-6 (GE)	07/91→02/97
RX 7 II (FC)	11/85→12/91
RX 7 II Convertible	01/88→01/92
RX 7 III (FD)	07/92→08/02
RX 8 (SE17)	10/03→06/12

MERCEDES-BENZ

COUPE (C123)	03/77→12/85
KOMBI Estate (S123)	09/77→12/86
Saloon (W123)	01/76→12/85

MG

MAESTRO	03/83→09/90
MGF (RD)	03/95→03/02
MG ZS	07/01→04/05
MG ZS Hatchback	07/01→10/05
MONTEGO	04/84→09/90

MITSUBISHI

LANCER V (CB/D_A)	09/91→12/96
LANCER V Station Wagon (CB_W, CD_W)	09/92→10/03
PAJERO / SHOGUN (III) (V7_W, V6_W)	01/99→01/07
PAJERO / SHOGUN CLASSIC (V2_W)	07/01→
PAJERO / SHOGUN Soft Top (III)	04/00→12/06
PAJERO / SHOGUN SPORT I (K90)	07/96→
SIGMA (F2_A, F1_A)	10/90→07/96
SIGMA Station Wagon (F0_W)	06/92→10/96

NISSAN

200 SX (S13)	07/88→12/95
240 SX	08/88→02/01
350 Z Coupe (Z33)	09/02→11/09
350 Z Roadster (Z33)	10/03→12/09
CUBE (Z11)	01/03→09/05
CUBE (Z12)	09/07→
KUBISTAR (X76)	08/03→10/09
KUBISTAR Box (X80)	08/03→
MICRA II (K11)	01/92→12/07
PATROL V Platform/Chassis	05/98→
SKYLINE (R33)	07/93→12/98
SKYLINE (R34)	01/98→08/02
SKYLINE Coupe (R34)	01/98→02/08
SKYLINE Coupe (V35)	01/01→12/07

OPEL

AGILA (A) (H00)	09/00→12/07
ARENA Box	01/97→12/01
ARENA Box (TB, TF)	03/98→08/01
ARENA Bus	01/97→12/01
ARENA Combi (THB)	03/98→08/01
ASTRA G Box (F70)	01/99→04/05
ASTRA G CLASSIC Caravan (F35)	03/04→07/09
ASTRA G CLASSIC Saloon (T98)	03/04→07/09
ASTRA G Convertible (F67)	03/01→10/05
ASTRA G Coupe (F07_)	03/00→05/05
ASTRA G Estate (F35_)	02/98→12/09
ASTRA G Hatchback (F48_, F08_)	02/98→12/09
ASTRA G Saloon (F69_)	09/98→12/09
COMBO Box Body / Estate	10/01→
COMBO Tour	10/01→
CORSA C (F08, F68)	09/00→12/09
CORSA C Box (F08, W5L)	09/00→
MONTEREY A (UBS_)	09/91→07/98
MONTEREY B	07/98→08/99
TIGRA TwinTop	06/04→

PEUGEOT

106 I (1A, 1C)	08/91→04/96
106 II (1)	04/96→05/05
106 Van (1_)	08/91→03/01
J5 Box (280L)	09/81→09/90
J5 Box (290L)	09/90→03/94
J5 Bus (280P)	09/81→09/90
J5 Bus (290P)	09/90→02/94
J5 Platform/Chassis (280L)	09/81→09/90
J5 Platform/Chassis (290L)	09/90→02/94

...AS51

PROTON

IMPIAN	09/01→
JUMBUCK Pickup	02/02→
PERSONA 300 / SATRIA (C9_M)	03/96→07/04
PERSONA 400 / WIRA (C9_S)	01/94→02/08
PERSONA 400 / WIRA Hatchback (C9_C, C9_S)	01/94→02/08
SATRIA / COMPACT (C9_M)	04/96→05/06
WIRA	05/95→
WIRA Hatchback	01/00→

RENAULT

19 I (B/C53_)	01/88→09/94
19 I Cabriolet (D53_)	07/91→04/92
19 I Chamade (L53_)	01/88→12/92
19 II (B/C53_)	01/91→06/01
19 II Cabriolet (D53_, 853_)	04/92→06/01
19 II Chamade (L53_)	04/92→08/03
21 (B48_)	07/89→06/94
21 Estate (K48_)	03/86→07/97
21 Saloon (L48_)	03/86→07/97
CLIO I (B/C57_, 5/357_)	05/90→09/98
CLIO I Box (S57_)	01/91→09/98
DUSTER (HS_)	01/11→
KANGOO (KC0/1_)	08/97→
KANGOO Express (FC0/1_)	08/97→

ROVER

45 (RT)	02/00→05/05
45 Saloon (RT)	02/00→05/05
400 (RT)	05/95→03/00
400 Hatchback (RT)	05/95→03/00
800 (XS)	10/86→02/99
800 Coupe	08/92→02/99
800 Hatchback (XS)	10/86→02/99
CITYROVER	09/03→12/05
MONTEGO	10/88→10/95
MONTEGO Estate (XE)	10/84→12/93

SAAB

9000	04/85→12/98
9000 Hatchback	09/84→12/98

SEAT

TOLEDO I (1L)	01/91→10/99

SKODA

FAVORIT (781)	05/89→09/94
FAVORIT Forman (785)	06/88→06/95
FAVORIT Pickup (787)	06/92→06/97
FELICIA I (6U1)	10/94→03/98
FELICIA I Estate (6U5)	07/95→03/98
FELICIA I Fun (797)	10/95→04/02
FELICIA II (6U1)	01/98→06/01
FELICIA II Estate (6U5)	01/98→06/01

SMART

ROADSTER (452)	04/03→11/05
ROADSTER Coupe (452)	04/03→11/05

SSANGYONG

MUSSO (FJ)	01/93→09/07
MUSSO SPORTS	08/04→
REXTON (GAB_)	04/02→
REXTON W	07/12→

SUZUKI

SWIFT Convertible (SF413)	09/91→10/96
SWIFT II Hatchback (EA, MA)	03/89→12/05
SWIFT II Saloon (AH, AJ)	03/89→05/01
SWIFT V (AZ)	01/17→
WAGON R	07/03→05/08
WAGON R+ (EM)	10/97→10/00
WAGON R+ (MM)	05/00→

TOYOTA

COROLLA (_E10_)	06/91→11/99
COROLLA (_E11_)	04/97→06/02
COROLLA Compact (_E10_)	05/92→11/99
COROLLA Compact (_E11_)	04/97→01/02
COROLLA Liftback (_E10_)	05/92→04/97
COROLLA Liftback (_E11_)	04/97→01/02
COROLLA Wagon (__E11_)	04/97→10/01
COROLLA Wagon (_E10_)	05/92→04/97
MR 2 III (ZZW3_)	10/99→06/07

...AS51

TOYOTA

PASEO Convertible (EL54)	10/96→01/98
PASEO Coupe (EL54)	08/95→12/99
RAV 4 I (SXA1_)	01/94→09/00
RAV 4 I Cabrio (SXA1_)	12/97→06/00
STARLET (EP91)	01/96→10/99

VOLVO

740 (744)	04/83→12/92
740 Kombi (745)	08/84→12/92
760 (704, 764)	08/81→07/92
780	04/86→11/90
940 (944)	08/90→03/95
940 II (944)	08/94→12/98
940 II Estate (945)	08/94→10/98
940 Kombi (945)	08/90→10/95

AS51+AK1

PROTON

SALOON MPI (C2_S)	01/89→11/96

AS53

ALFA ROMEO

155 (167_)	01/92→12/97
164 (164_)	01/87→09/98
166 (936_)	09/98→06/07

ALPINA

B3 (E36)	04/93→05/99
B3 Convertible (E36)	04/93→03/99
B3 Coupe (E36)	04/96→03/99
B3 Estate (E36)	04/93→03/99
B6 (E36)	03/92→07/93
B8 (E36)	01/95→03/98
B8 Convertible (E36)	01/95→03/98
B8 Coupe (E36)	01/95→03/98
B8 Estate (E36)	01/95→03/98
ROADSTER (Z8)	06/02→10/03
ROADSTER S (Z4)	07/03→12/05

AUDI

80 (8C, B4)	09/91→12/94
80 (89, 89Q, 8A, B3)	06/86→10/91
80 Avant (8C, B4)	09/91→01/96
90 (81, 85, B2)	08/84→03/87
90 (89, 89Q, 8A, B3)	04/87→09/91
100 (44, 44Q, C3)	08/82→07/91
100 Avant (44, 44Q, C3)	08/82→11/90
200 (44, 44Q)	06/83→12/91
200 Avant (44, 44Q)	09/83→12/91
A3 (8L1)	09/96→06/03
A4 (8D2, B5)	11/94→09/01
A4 Avant (8D5, B5)	11/94→09/01
COUPE (81, 85)	07/80→10/88
QUATTRO (85)	07/80→07/91
TT (8N3)	10/98→06/06
TT Roadster (8N9)	10/99→06/06
V8 (44_, 4C_)	10/88→02/94

BMW

3 (E36)	09/90→02/98
3 Compact (E36)	03/94→08/00
3 Convertible (E36)	03/93→04/99
3 Coupe (E36)	03/92→04/99
3 Touring (E36)	01/95→10/99
Z4 (E85)	02/03→12/09
Z4 Coupe (E86)	03/06→01/09
Z8 (E52)	06/00→06/03

CHEVROLET

CORVETTE (C6)	09/04→
EPICA (KL1_)	01/05→
LACETTI (J200)	03/03→
LACETTI Estate (J200)	03/05→
LACETTI Saloon	03/03→03/13
SPARK ('00)	09/00→12/04

CHRYSLER

NEON (PL)	05/94→09/00

DAEWOO

LEGANZA (KLAV)	03/97→04/04
MATIZ (KLYA)	09/98→

DAIHATSU

TERIOS (J2_)	11/05→

...AS53

DAIHATSU

YRV (M2)	02/01→

DODGE

NEON	05/94→08/99

FIAT

COUPE (175_)	11/93→08/00

FORD

MAVERICK (UDS, UNS)	02/93→04/98
MONDEO I (GBP)	02/93→08/96
MONDEO I Estate (BNP)	01/93→08/96
MONDEO I Saloon (GBP)	02/93→08/96
MONDEO II (BAP)	08/96→09/00
MONDEO II Estate (BNP)	08/96→09/00
MONDEO II Saloon (BFP)	08/96→09/00

HONDA

CIVIC VII Coupe (EM2)	02/01→12/05
CR-V II (RD_)	09/01→12/06

JEEP

GRAND CHEROKEE II (WJ, WG)	09/98→09/05
GRAND CHEROKEE III (WH, WK)	10/04→10/11
GRAND CHEROKEE IV (WK, WK2)	06/10→

KIA

CLARUS (K9A)	05/96→11/01
CLARUS Estate (GC)	05/98→
K2500 (SD)	06/01→
K2700	01/04→
K2700 (SD)	10/99→
K2900	01/08→
MENTOR	01/95→10/97
MENTOR Saloon	01/92→09/01
PREGIO Box (TB)	10/97→
PREGIO Bus	08/95→09/04
SHUMA (FB)	09/96→12/01
SHUMA II (FB)	05/01→08/04
SHUMA II Saloon (FB)	05/01→05/04
SHUMA Saloon (FB)	03/96→10/01

LEXUS

ES (VCV10_, VZV21_)	09/89→12/97
GS (JZS147_)	01/93→08/97

MAZDA

323 C IV (BG)	06/89→09/00
323 C V (BA)	08/94→01/01
323 F IV (BG)	04/87→10/94
323 F V (BA)	07/94→09/98
323 F VI (BJ)	09/98→05/04
323 P V (BA)	10/96→09/98
323 S IV (BG)	06/89→05/95
323 S V (BA)	09/92→12/03
323 S VI (BJ)	05/98→05/04
626 IV (GE)	08/91→08/98
626 IV Hatchback (GE)	08/91→08/98
626 V (GF)	05/97→12/02
626 V Hatchback (GF)	05/97→12/02
626 V Station Wagon (GW)	01/98→12/02
MX-3 (EC)	07/91→09/98
XEDOS 6 (CA)	01/92→10/99
XEDOS 9 (TA)	07/93→09/02

MITSUBISHI

CARISMA (DA_)	07/95→06/06
CARISMA Saloon (DA_)	09/96→06/06
COLT V (CJ_, CP_)	09/95→09/03
LANCER VI (CJ-CP_)	09/95→08/03
MIRAGE Hatchback (CJ_A)	09/95→07/03
MIRAGE Saloon (CK_A)	09/95→07/03

NISSAN

100 NX (B13)	03/90→01/96
200 SX (S14)	10/93→12/99
300 ZX (Z32)	09/89→12/00
ALMERA I (N15)	07/95→07/00
ALMERA I Hatchback (N15)	07/95→01/01
ALMERA II (N16)	06/00→
ALMERA II Hatchback (N16)	01/00→
MAXIMA III (J30)	10/88→02/95
MICRA C+C III (K12)	08/05→
MICRA III (K12)	03/02→06/10
MICRA IV (K13)	05/10→

...AS53

NISSAN

PRIMERA (P11)	06/96→12/01
PRIMERA Hatchback (P11)	06/96→07/02
PRIMERA Traveller (WP11)	06/96→01/02
TERRANO II (R20)	10/92→09/07
TERRANO II Van (R20)	06/98→09/07

RENAULT

CLIO II (BB0/1/2_, CB0/1/2_)	09/98→
CLIO II Box (SB0/1/2_)	09/98→
THALIA I (LB0/1/2_)	02/98→

SAAB

9-3 (YS3D)	02/98→08/03
9-3 Cabriolet (YS3D)	02/98→08/03
900 II	07/93→04/99
900 II Convertible	09/93→04/99
900 II Coupe	12/93→04/99
9000	04/85→12/98
9000 Hatchback	09/84→12/98

SEAT

AROSA (6H)	05/97→06/04
CORDOBA (6K1, 6K2)	02/93→10/02
CORDOBA (6K2)	06/99→10/02
CORDOBA (6L2)	09/02→11/09
CORDOBA Vario (6K5)	08/96→12/02
IBIZA II (6K1)	03/93→02/02
IBIZA III (6K1)	08/99→02/02
IBIZA IV (6L1)	02/02→11/09
LEON (1M1)	11/99→06/06
TOLEDO II (1M2)	10/98→05/06

SKODA

FABIA (6Y2)	08/99→03/08
FABIA Combi (6Y5)	04/00→12/07
FABIA Praktik	07/01→12/07
FABIA Saloon (6Y3)	10/99→12/07
OCTAVIA (1U2)	09/96→12/10
OCTAVIA Combi (1U5)	07/98→12/10
SUPERB (3U4)	12/01→03/08

SMART

CABRIO (450)	03/00→01/04
CITY-COUPE (450)	07/98→01/04
CROSSBLADE (450)	06/02→12/03
FORTWO Cabrio (450)	01/04→01/07
FORTWO Coupe (450)	01/04→02/07

SSANGYONG

ACTYON I	11/05→
ACTYON II	08/12→
ACTYON SPORTS I (QJ)	11/05→
ACTYON SPORTS II	10/12→

SUBARU

FORESTER (SF)	03/97→09/02
FORESTER (SG)	06/02→10/12
IMPREZA Coupe (GFC)	01/93→12/00
IMPREZA Estate	07/07→12/12
IMPREZA Estate (GF)	08/92→12/00
IMPREZA Saloon (GC)	08/92→09/01
JUSTY II (JMA, MS)	10/95→11/03
LEGACY I (BC)	01/89→08/94
LEGACY I Estate (BC, BJF)	01/89→08/94
LEGACY II (BD, BG)	03/94→10/99
LEGACY II Estate (BD, BG)	02/94→12/99
LEGACY OUTBACK (BG)	01/96→12/99

SUZUKI

CELERIO	02/14→
SPLASH	01/08→
SWIFT III (MZ, EZ)	02/05→

TOYOTA

AVENSIS (_T22_, ZZT22_)	09/97→02/03
AVENSIS Liftback (_T22_, ST22_)	09/97→02/03
AVENSIS Station Wagon (_T22_, ZZT22_)	09/97→02/03
CAMRY (_CV2_, _XV2_)	08/96→11/01
CAMRY Station Wagon (_XV1_, _CV1_, _V10)	06/91→08/97
CARINA E (_T19_)	04/92→09/97
CARINA E Saloon (_T19_)	04/92→09/97

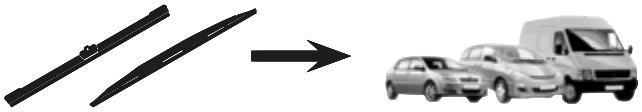

...AS53

TOYOTA

CARINA E Sportswagon (_T19_)	02/92→09/97
CELICA (ST20_, AT20_)	09/93→11/99
CELICA Convertible (AT20_, ST20_)	11/93→08/99
HIACE / COMMUTER V (TRH2_, KDH2_)	08/04→
HIACE III Box (YH7_, LH6_, LH7_, LH5_, YH5_, YH6_)	08/87→07/06
HIACE III Platform/Chassis (YH8_, LH8_)	08/85→04/95
HIACE III Wagon (LH1_, RZH1_)	08/87→12/04
HIACE IV Box (LXH1_, RZH1_, LH1_)	08/95→
HIACE IV Bus (LH1_)	08/95→
HIACE IV Platform/Chassis (LXH1_, RCH1_, KLH1_)	08/95→
HIACE V Box (TRH2_, KDH2_)	08/04→
HILUX Closed Off-Road Vehicle (RZN1_, LN1_)	08/95→08/05
HILUX III Pickup (KUN_, TGN_, LAN_, GGN_)	08/04→
SUPRA (JZA80)	05/93→07/02
YARIS (SCP1_, NLP1_, NCP1_)	01/99→12/05

VOLVO

760 (704, 764)	08/81→07/92
760 Kombi (704, 765)	01/82→07/92
850 (LS)	06/91→10/97
850 Estate (LW)	04/92→10/97
960 (964)	08/90→07/94
960 Kombi (965)	08/90→07/94
C70 I Convertible	03/98→10/05
C70 I Coupe	03/97→09/02
S40 I (VS)	07/95→06/04
S70 (LS)	11/96→11/00
S90	11/96→12/98
V40 Estate (VW)	07/95→06/04
V70 I (LV)	12/95→12/00
V90 Estate	11/96→12/98

VW

BORA (1J2)	10/98→09/05
BORA Estate (1J6)	05/99→05/05
CADDY II Box (9K9A)	11/95→01/04
CADDY II Estate (9K9B)	11/95→01/04
CADDY II Pickup (9U7)	06/96→12/00
FOX (5Z1, 5Z3)	10/03→
GOLF III (1H1)	08/91→07/98
GOLF III Cabriolet (1E7)	07/93→05/98
GOLF III Variant (1H5)	07/93→04/99
GOLF IV (1J1)	08/97→06/05
GOLF IV Cabriolet (1E7)	06/98→06/02
GOLF IV Variant (1J5)	05/99→06/06
LUPO (6X1, 6E1)	09/98→07/05
NEW BEETLE (9C1, 1C1)	01/98→09/10
NEW BEETLE Convertible (1Y7)	09/02→10/10
PASSAT (3A2, 35I)	02/88→12/97
PASSAT (3B2)	08/96→12/01
PASSAT (3B3)	11/00→05/05
PASSAT Estate (3B5)	05/97→12/01
PASSAT Variant (3A5, 35I)	02/88→06/97
PASSAT Variant (3B6)	10/00→08/05
POLO (9N_)	10/01→01/12
POLO CLASSIC (6KV2)	11/95→07/06
POLO Variant (6KV5)	04/97→09/01
POLO VIVO Hatchback	02/10→
POLO VIVO Saloon	02/10→
VENTO (1H2)	11/91→09/98

AS55

ALFA ROMEO

8C (920_)	01/07→10/09
8C SPIDER (920_)	01/08→10/10
147 (937_)	11/00→12/10
156 (932_)	09/97→09/05
156 Sportwagon (932_)	01/00→05/06
GT (937_)	11/03→09/10

AUDI

100 (4A, C4)	12/90→07/94
100 Avant (4A, C4)	12/90→07/94

...AS55

AUDI

A6 (4A, C4)	06/94→10/97
A6 (4B2, C5)	01/97→01/05
A6 Avant (4A, C4)	06/94→12/97
A6 Avant (4B5, C5)	11/97→01/05
A8 (4D2, 4D8)	03/94→12/02
ALLROAD (4BH, C5)	05/00→08/05
CABRIOLET (8G7, B4)	05/91→08/00
COUPE (89, 8B)	10/88→12/96
V8 (44_, 4C_)	10/88→02/94

BENTLEY

AZURE	09/95→06/06
CONTINENTAL	10/91→12/02

BMW

X3 (E83)	01/03→12/11
Z4 ROADSTER (E89)	05/09→

CHEVROLET

ALERO	03/99→09/04
CORVETTE ('97)	01/97→12/04
CORVETTE Convertible	09/97→09/04
MATIZ (M200, M250)	03/05→
TRAILBLAZER (KC_)	09/01→12/09

CHRYSLER

300 C	09/10→
300 C (LX)	09/04→
300 C Touring (LX)	09/04→12/10
NEON II	08/99→12/06
SEBRING (JR)	09/00→06/07
SEBRING Convertible (JR)	04/01→06/07
STRATUS (JA)	09/94→04/01
STRATUS Convertible (JX)	04/96→04/01
VOYAGER I (AS)	08/84→09/90

CITROËN

BERLINGO (MF)	07/96→12/11
BERLINGO Box (M_)	07/96→12/11
C3 Pluriel (HB_)	05/03→
RELAY Bus (230P)	02/94→04/02
RELAY Bus (244, Z_)	04/02→
RELAY Platform/Chassis (230)	03/94→04/02
RELAY Platform/Chassis (244)	02/02→
RELAY Van/Box (230L)	02/94→04/02
RELAY Van/Box (244)	04/02→
XM (Y3)	05/89→10/94
XM (Y4)	05/94→10/00
XM Break (Y3)	05/89→07/94
XM Break (Y4)	05/94→10/00
XSARA (N1)	04/97→12/05
XSARA Box	05/98→08/05
XSARA Break (N2)	10/97→03/10
XSARA Coupe (N0)	01/98→04/05

DACIA

DOKKER	11/12→
DOKKER Express	12/12→
LODGY	03/12→
LOGAN II	10/12→
LOGAN MCV II	02/13→
SANDERO II	10/12→

DAEWOO

EVANDA (KLAL)	08/02→
NUBIRA Saloon (KLAN)	07/03→
NUBIRA Wagon (KLAN)	07/03→

DODGE

NEON II	08/99→
STRATUS	09/94→04/01

FIAT

DOBLO Cargo (223_)	11/00→
DOBLO MPV (119_, 223_)	03/01→
DUCATO Box (230_)	03/94→05/05
DUCATO Box (244_)	04/02→
DUCATO Bus (230_)	03/94→04/02
DUCATO Bus (244_)	04/02→
DUCATO Platform/Chassis (230_)	03/94→04/02
DUCATO Platform/Chassis (244_)	04/02→
FULLBACK Pickup (KT_)	01/16→

...AS55

FIAT

PUNTO (188_)	09/99→07/12
PUNTO Van (188_)	02/00→10/09
STILO (192_)	10/01→11/10
STILO Multi Wagon (192_)	01/03→08/08

FORD

COUGAR (EC_)	08/98→12/01
ECOSPORT	09/11→
FIESTA V (JH_, JD_)	11/01→03/10
FIESTA V Van	10/03→12/10
FOCUS (DAW, DBW)	10/98→12/07
FOCUS Estate (DNW)	02/99→12/07
FOCUS Saloon (DFW)	02/99→12/07
FUSION (JU_)	08/02→12/12
MONDEO III (B5Y)	10/00→03/07
MONDEO III Estate (BWY)	10/00→03/07
MONDEO III Saloon (B4Y)	10/00→03/07
TOURNEO CONNECT	06/02→12/13
TRANSIT CONNECT (P65_, P70_, P80_)	06/02→
TRANSIT TOURNEO ('94)	08/94→12/00

HONDA

ACCORD IV (CB)	11/89→12/93
ACCORD IV Aerodeck (CB)	09/89→12/93
ACCORD IV Coupe (CB, CC)	05/89→12/93
ACCORD V (CC, CD)	06/92→12/97
ACCORD V (CE, CF)	09/95→10/98
ACCORD V Aerodeck (CE)	04/93→02/98
ACCORD V Coupe (CD)	04/93→12/98
ACCORD VI (CG, CK)	03/97→12/03
ACCORD VI Coupe (CG)	12/97→06/03
ACCORD VI Hatchback (CH)	12/99→12/02
PILOT	09/08→

HYUNDAI

ACCENT III (MC)	11/05→12/10
ACCENT III Saloon (MC)	11/05→11/10
COUPE (GK)	01/01→11/09
COUPE (RD)	06/96→04/02
i10 (IA)	08/13→
i10 (PA)	10/07→02/16
i10 Saloon	12/13→
MATRIX (FC)	06/01→08/10
SANTA FÉ I (SM)	11/00→03/06
SANTAMO	10/98→12/02
SONATA IV (EF)	03/98→12/05
TERRACAN (HP)	06/01→03/08
TIBURON Coupe	01/01→12/08
XG (XG)	12/98→12/05
XG Saloon	09/00→12/05

INFINITI

FX ('02)	09/02→12/08
I30	01/97→
QX4	01/97→

ISUZU

D-MAX (8DH)	05/02→06/12
D-MAX (TFR, TFS)	06/12→
D-MAX Platform/Chassis	06/12→
D-MAX Platform/Chassis (8DH)	01/07→06/12
IMPULSE	01/90→12/93

JAGUAR

F-TYPE Convertible (QQ6_)	10/12→
F-TYPE Coupe (QQ6_)	10/13→
S-TYPE (CCX_)	01/99→12/08
XK Convertible (QQ6_)	03/06→07/14
XK Coupe (QQ6_)	03/06→07/14
X-TYPE (CF1_)	03/01→11/09
X-TYPE Estate (CF1_)	09/03→12/09

JEEP

COMPASS (MK49)	08/06→
PATRIOT (MK74)	02/07→

KIA

JOICE	02/00→
MAGENTIS (GD)	05/01→
PICANTO (BA)	04/04→
PICANTO (TA)	05/11→
RIO II (JB)	03/05→

...AS55

KIA

RIO II Saloon (JB)	03/05→

LANCIA

LYBRA (839_)	07/99→10/05
LYBRA SW (839_)	07/99→10/05

LAND ROVER

FREELANDER (LN_)	02/98→10/06
FREELANDER Soft Top (LN_)	02/98→10/06
RANGE ROVER II (LP_)	07/94→03/02

LEXUS

IS I (JCE1_, GXE1_)	04/99→07/05
IS SportCross	10/01→10/05
LS (UCF20)	10/94→12/00

MASERATI

4200 GT Coupe	03/02→11/07
4200 GT SPYDER Convertible	10/01→

MAZDA

2 (DL, DJ)	11/14→
2 Saloon (DL)	01/15→
6 (GG)	06/02→12/08
6 Hatchback (GG)	08/02→12/08
6 Station Wagon (GY)	08/02→12/07
MPV I (LV)	09/88→09/99

MERCEDES-BENZ

M-CLASS (W163)	02/98→06/05
SLK (R170)	04/96→04/04

MG

MG 3	04/11→
MG X-POWER	01/03→04/08
MG ZT	06/01→07/05
MG ZT- T	10/01→07/05

MITSUBISHI

GALANT V (E5_A, E7_A, E8_A)	11/92→10/96
GALANT V Saloon (E5_A, E7_A, E8_A)	11/92→12/98
GALANT VI (EA_)	09/96→10/04
GALANT VI Estate (EA_)	09/96→10/03
MIRAGE Saloon (A10_)	07/13→
MIRAGE / SPACE STAR Hatchback (A0_A, A05A, LA)	01/12→
OUTLANDER I (CU_W)	03/01→12/06
PAJERO / SHOGUN (IV) (V8_W, V9_W)	11/06→
PAJERO / SHOGUN Box (IV) (V90, V80)	11/06→
SANTAMO	03/99→12/04
SPACE RUNNER (N1_W, N2_W)	10/91→08/99
SPACE RUNNER (N6_W)	08/99→01/03
SPACE STAR Hatchback (A0_A)	05/12→
SPACE WAGON (D0_V/W)	01/84→01/92
SPACE WAGON (N3_W, N4_W)	05/91→11/98

NISSAN

PATHFINDER II (R50)	09/95→07/05
PIXO (UA0)	03/09→
VANETTE Box (C22)	10/86→12/11
VANETTE Bus (C22)	10/86→12/11

OPEL

AGILA (B) (H08)	04/08→

PEUGEOT

306 (7B, N3, N5)	04/93→10/03
306 Box Body / Hatchback	04/93→08/01
306 Break (7E, N3, N5)	06/94→04/02
306 Convertible (7D, N3, N5)	01/94→04/02
306 Hatchback (7A, 7C, N3, N5)	01/93→10/03
306 Van (N_, 7_)	07/93→08/02
605 (6B)	06/89→09/99
PARTNER Box (5)	04/96→12/15
PARTNER Combispace (5F)	05/96→12/15
PARTNER Platform/Chassis	01/99→07/08

PORSCHE

911 (996)	09/97→08/05
911 (997)	07/04→12/12
911 Convertible (996)	02/98→08/05
911 Convertible (997)	04/05→12/12
911 Targa (996)	12/01→08/05
911 Targa (997)	07/06→12/12

...AS55

PORSCHE
BOXSTER (986)		09/96→12/04
BOXSTER (987)		11/04→12/11
BOXSTER Spyder (987)		09/07→12/11
CARRERA GT (980)		07/03→12/06
CAYMAN (987)		11/05→12/13

PROTON
GEN 2 (CM_)		06/04→
GEN-2 PERSONA		01/07→07/16
SATRIA NEO		02/07→
SAVVY		10/05→

RENAULT
25 (B29_)		04/84→12/93
ESPACE I (J11_)		07/84→12/92
LOGAN II		09/12→
LOGAN II Estate (K8_)		12/13→
MEGANE I (BA0/1_)		08/95→12/04
MEGANE I Cabriolet (EA0/1_)		10/96→08/03
MEGANE I Classic (LA0/1_)		09/96→08/08
MEGANE I Coach (DA0/1_)		03/96→08/03
MEGANE I Grandtour (KA0/1_)		03/99→08/03
SANDERO/STEPWAY II		11/13→

ROLLS-ROYCE
CORNICHE V Convertible		01/00→09/02

ROVER
75 (RJ)		02/99→05/05
75 Tourer (RJ)		08/01→06/06
600 (RH)		08/93→10/00

SAAB
9-3 (YS3F)		09/02→02/15
9-3 Convertible (YS3F)		08/03→02/15
9-3 Estate (YS3F)		03/05→02/15

SSANGYONG
KYRON		05/05→

SUBARU
IMPREZA Estate (GG)		10/00→12/08
IMPREZA Hatchback		10/00→12/07
IMPREZA Saloon (GD)		09/99→06/09
SVX (CX)		09/92→12/97

SUZUKI
ALTO (HA25, HA35)		01/09→
SWIFT IV (FZ, NZ)		10/10→

TOYOTA
COROLLA (CDE12_, ZZE12_, NDE12_, ZDE12_)		01/01→12/07
COROLLA Saloon (_E12J_, _E12T_)		08/00→03/08
HILUX VIII Platform/Chassis (_N1_)		05/15→
LAND CRUISER (LJ12_, KZJ12_, TRJ12_, KDJ12_, GRJ12_)		09/02→08/10
YARIS VERSO (_NLP2_, _NCP2_)		08/99→09/05

AS60

ALPINA
B10 (E34)		04/88→04/95
B10 Estate (E34)		11/93→04/96
B12 (E38)		12/95→07/01

BMW
5 (E34)		12/87→11/95
5 Touring (E34)		11/91→01/97
7 (E38)		10/94→11/01
X5 (E53)		05/00→02/07

CHEVROLET
CAMARO ('92)		12/92→12/02
CAMARO Convertible ('92)		10/92→12/02
CAPTIVA (C100, C140)		06/06→
CRUZE (J300)		05/09→
CRUZE Hatchback (J305)		12/10→
ORLANDO (J309)		12/10→
SPARK (M300) ('09)		12/09→
TRANS SPORT		08/96→09/05

CHRYSLER
300 M (LR)		07/98→09/04
NEW YORKER		01/92→09/98

...AS60

CHRYSLER
SEBRING (JS)		09/06→12/10
SEBRING Convertible (JS)		05/07→12/10
VISION		09/93→12/97

CITROËN
C2 (JM_)		09/03→
C2 ENTERPRISE		04/09→
C3 I (FC_)		02/02→
C4 AIRCROSS		08/10→
XANTIA (X1)		03/93→07/99
XANTIA (X2)		01/98→04/03
XANTIA Break (X1)		06/95→01/98
XANTIA Break (X2)		01/98→04/03

DACIA
DUSTER		04/10→
DUSTER Box		04/11→

DODGE
AVENGER		06/07→
CALIBER		06/06→
JOURNEY		06/08→

FIAT
FREEMONT (JC_, JF_)		08/11→

FORD
KA		01/08→
KA (RU8)		10/08→
RANGER (TKE)		04/11→

HONDA
CIVIC VII Hatchback (EU, EP, EV)		03/99→02/06
CIVIC VII Saloon (ES)		10/00→04/06

HYUNDAI
GENESIS (BH)		01/08→12/15
GENESIS Coupe		01/08→
GRANDEUR (HG)		01/11→
GRANDEUR (TG)		06/03→
i30 (FD)		10/07→11/11
i30 CW (FD)		10/07→06/12
i800		02/08→
ix35 (LM, EL, ELH)		08/09→
iLoad		02/08→
SANTA FÉ II (CM)		10/05→12/12
SONATA V (NF)		12/04→11/12
TUCSON (JM)		08/04→

INFINITI
EX		09/07→
FX ('08)		07/08→
Q45 I		01/89→12/96
QX50		08/13→
QX56		01/10→
QX70		08/13→

KIA
CARENS I (FC)		06/99→10/02
CARENS II (FJ)		07/02→
CEE'D Hatchback (ED)		12/06→12/12
CEE'D SW (ED)		09/07→12/12
CERATO (LD)		03/04→
CERATO II (TD)		01/09→
CERATO II Saloon (TD)		01/09→
CERATO KOUP (TD)		01/09→
CERATO Saloon (LD)		04/04→12/09
MAGENTIS (MG)		10/05→
OPIRUS (GH)		09/03→
OPTIMA I		01/10→
PICANTO (JA)		03/17→
PRO CEE'D (ED)		02/08→02/13
SEDONA I		06/98→10/01
SEDONA II		01/99→09/07
SORENTO I (JC)		08/02→
SORENTO II (XM)		11/09→
SOUL (AM)		01/09→
SOUL II (PS)		02/14→
SPORTAGE (JE_, KM_)		09/04→
SPORTAGE (SL)		09/09→

LADA
GRANTA (2190)		10/11→
GRANTA Hatchback (2191)		08/14→
VESTA		11/15→

...AS60

LANCIA
FLAVIA Convertible (JS_)		03/12→12/14
KAPPA (838_)		08/94→10/01
KAPPA Coupe (838_)		07/96→03/01
KAPPA SW (838_)		07/96→10/01
YPSILON (843_)		10/03→12/11

LEXUS
ES (_V4_)		03/06→06/12
ES (MCV_, VZV_)		10/96→06/08
GS (JZS160_, UZS161_, UZS160_)		08/97→12/04
LS (UCF30)		10/00→08/06
LX (UZJ100)		09/97→03/08
RX (MCU15)		07/00→05/03
SC (UZZ40_)		01/01→07/10

MAZDA
2 (DE)		07/07→06/15
2 (DY)		02/03→06/07
2 Saloon (DE)		05/10→06/15

MERCEDES-BENZ
A-CLASS (W168)		07/97→08/04

MITSUBISHI
ECLIPSE II (D3_A)		04/94→04/99
LANCER Estate (CS_W)		09/03→12/08
LANCER Saloon (CS_A, CT0)		03/00→12/13
LANCER Saloon (CY/Z_A)		03/07→
LANCER SPORTBACK (CX_A)		10/07→

NISSAN
INTERSTAR Box (X70)		04/02→
INTERSTAR Bus (X70)		04/02→
INTERSTAR Platform/Chassis		08/03→
NOTE (E11)		01/05→06/12
NP300 NAVARA (D40)		10/04→
PATHFINDER III (R51)		01/05→
PATHFINDER IV (R52)		09/12→
PRIMASTAR Box (X83)		09/02→
PRIMASTAR Bus (X83)		03/01→
PRIMASTAR Platform/Chassis		07/02→08/06
TIIDA Hatchback		05/04→12/13
TIIDA Hatchback (C11X)		02/06→12/11
TIIDA Saloon (SC11X)		05/04→12/13
TITAN		10/03→
X-TRAIL (T30)		06/01→01/13
X-TRAIL (T31)		03/07→07/14

OPEL
ANTARA		05/06→
OMEGA B (25_, 26_, 27_)		03/94→07/03
OMEGA B Estate (21_, 22_, 23_)		03/94→07/03
SIGNUM		05/03→12/08
VECTRA C		04/02→
VECTRA C Estate		10/03→
VECTRA C GTS		08/02→
VIVARO Box (F7)		08/01→
VIVARO Combi (J7)		08/01→
VIVARO Platform/Chassis (E7)		08/01→

PEUGEOT
406 (8B)		10/95→01/05
406 Break (8E/F)		10/96→10/04
1007 (KM_)		04/05→
4008		05/12→

PORSCHE
PANAMERA (970)		03/09→10/16

RENAULT
LAGUNA I (B56_, 556_)		11/93→08/02
LAGUNA I Grandtour (K56_)		09/95→08/02
LAGUNA II (BG0/1_)		03/01→
LAGUNA II Grandtour (KG0/1_)		03/01→
LATITUDE (L70_)		07/10→
MEGANE II (BM0/1_, CM0/1_)		07/01→10/12
MEGANE II Coupé-Cabriolet (EM0/1_)		09/03→03/10
MEGANE II Estate (KM0/1_)		08/03→08/12
MEGANE II Saloon (LM0/1_)		09/03→
MEGANE Scenic (JA0/1_)		10/96→12/01
SAFRANE I (B54_)		04/92→10/97

...AS60

RENAULT
SAFRANE II (B54_)		07/96→12/00
SCÉNIC I (JA0/1_)		09/99→10/03
TRAFIC II Box (FL)		03/01→
TRAFIC II Bus (JL)		03/01→
TRAFIC II Platform/Chassis (EL)		03/01→

ROLLS-ROYCE
SILVER SERAPH		03/98→09/02

SAAB
9-5 (YS3E)		09/97→12/09
9-5 Estate (YS3E)		10/98→12/09
9-7X		06/04→07/12

SSANGYONG
KORANDO		07/10→
RODIUS		05/05→
RODIUS II		07/13→
STAVIC		02/05→

TOYOTA
AVENSIS (T25_)		04/03→11/08
AVENSIS Estate (T25, CDT25_, ZZT25_)		04/03→11/08
AVENSIS Saloon (T25)		04/03→11/08
COROLLA Estate (_E12J_, _E12T_)		03/01→12/08
PICNIC (_XM10)		05/96→12/01
RAV 4 II (CLA2_, XA2_, ZCA2_, ACA2_)		06/00→11/05
SIENNA (MCL10_)		08/97→12/02
VIOS/YARIS Saloon (ZSP9_, NCP9_)		08/05→
YARIS (SCP9_, NSP9_, KSP9_, NCP9_, ZSP9_)		01/05→

VOLVO
S60 I		07/00→04/10
S80 I (TS, XY)		05/98→02/08
V70 II (SW)		11/99→12/08
XC70 CROSS COUNTRY		10/97→10/07
XC90 I		06/02→12/14

VW
AMAROK (2H_, S1B)		09/10→
AMAROK Platform/Chassis (S1B)		09/11→
MULTIVAN V (7HM, 7HN, 7HF, 7EF, 7EM, 7EN)		04/03→08/15
POLO Saloon (602, 604, 612, 614)		05/09→
TRANSPORTER V Box (7HA, 7HH, 7EA, 7EH)		04/03→08/15
TRANSPORTER V Bus (7HB, 7HJ, 7EB, 7EJ, 7EF, 7EG, 7HF, 7EC)		04/03→08/15
TRANSPORTER V Platform/Chassis (7JD, 7JE, 7JL, 7JY, 7JZ, 7FD		04/03→08/15

AS65

CHRYSLER
GRAND VOYAGER V (RT)		10/07→

CITROËN
C5 I (DC_)		03/01→03/05
C5 I Break (DE_)		06/01→08/04
DISPATCH (U6U)		06/94→12/06
DISPATCH Platform/Chassis		10/99→10/06
DISPATCH Van/Box (BS_, BT_, BY_, BZ_)		06/94→10/06
SYNERGIE		03/94→07/02

FIAT
SCUDO Box (220_)		02/96→12/06
SCUDO Combinato (220_)		02/96→12/06
SCUDO Platform/Chassis (220_)		09/96→12/06
SEDICI (FY_)		06/06→10/14
ULYSSE (220_)		06/94→08/02

HONDA
ACCORD VII (CL)		01/03→09/12
ACCORD VII (CM)		09/02→05/08
ACCORD VII Tourer (CM)		04/03→05/08
ACCORD IX Saloon (CR)		09/12→
CR-V III (RE)		06/06→
FR-V (BE)		08/04→

HYUNDAI
ACCENT IV (RB)		11/10→

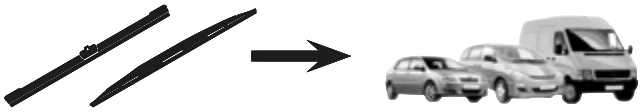

...AS65

HYUNDAI

ACCENT IV Saloon (RB)	08/10→
GENESIS (DH)	06/14→
TRAJET (FO)	03/00→07/08

INFINITI

G Convertible	09/10→
G Coupe	09/07→
G Saloon ('02)	10/02→
G Saloon ('07)	01/07→
M (Y51)	03/10→
Q50	04/13→
Q60 Convertible	10/13→
Q60 Coupe	09/16→
Q60 Coupe	10/13→
Q70 (Y51)	03/13→

KIA

CARENS III (UN)	09/06→
NIRO	09/16→
RIO IV (YB, SC)	01/17→
RIO IV Saloon (SC, FB)	07/17→
SEDONA III	09/05→
STONIC (YB)	07/17→

LANCIA

THESIS (841_)	07/02→07/09
VOYAGER MPV (RT_)	09/11→12/14
ZETA (22_)	05/95→09/02

LEXUS

RX (MHU3_, GSU3_, MCU3_)	02/03→12/08

MASERATI

GRANCABRIO	03/10→
GRAN TURISMO	09/07→
QUATTROPORTE V	03/04→

MAZDA

5 (CR19)	02/05→12/10
5 (CW)	09/10→

MERCEDES-BENZ

A-CLASS (W168)	07/97→08/04

MITSUBISHI

COLT CZC Convertible (RG)	05/06→07/09
COLT VI (Z3_A, Z2_A)	10/02→12/12
GALANT Saloon (DJ_, ED_, EF_)	10/03→
SPACE WAGON (N9_W, N8_W)	10/98→12/04

NISSAN

ALMERA TINO (V10)	12/98→02/06
ALTIMA II	08/01→04/07
ALTIMA III	10/06→07/13
MAXIMA / MAXIMA QX V (A33)	04/99→11/03

PEUGEOT

206+ (T3E)	01/09→
206 CC (2D)	09/00→
206 Hatchback (2A/C)	08/98→
206 Saloon	03/07→
206 SW (2E/K)	07/02→
206 Van	04/99→03/09
307 (3A/C)	08/00→
307 Break (3E)	03/02→12/09
307 SW (3H)	03/02→12/09
406 Coupe (8C)	03/97→02/05
806 (221)	06/94→08/02
EXPERT (224)	10/95→12/06
EXPERT Box (222)	07/95→12/06
EXPERT Platform/Chassis (223)	12/95→12/06

SMART

FORFOUR (454)	01/04→06/06

SUBARU

IMPREZA Hatchback (GP)	10/11→

SUZUKI

SX4 (EY, GY)	06/06→
SX4 Saloon (GY)	10/07→

TOYOTA

AURIS (NRE15_, ZZE15_, ADE15_, ZRE15_, NDE15_)	10/06→09/12
AVENSIS VERSO (_CLM2_, _ACM2_)	08/01→11/09
CAMRY (MCV3_, ACV3_, _XV3_)	08/01→11/06

...AS65

TOYOTA

CELICA (ZZT23_)	08/99→03/06
COROLLA Saloon (NRE18_, ZRE17_, ZRE18_, NDE18_)	06/13→
COROLLA Verso (ZDE12_, CDE12_)	07/01→07/04
COROLLA Verso (ZER_, ZZE12_, R1_)	03/04→04/09
PRIUS Hatchback (NHW20_)	08/03→03/09
SIENNA (MCL2_, GSL2_)	01/03→12/09

AS70

CITROËN

DISPATCH MPV	01/07→
DISPATCH Platform/Chassis	07/11→
DISPATCH Van/Box	01/07→

FIAT

SCUDO (270_, 272_)	01/07→
SCUDO Box (270_, 272_)	01/07→
SCUDO Platform/Chassis (270_, 272_)	01/07→

FORD

TRANSIT Box (FA_ _)	01/00→05/06
TRANSIT Bus ('06)	04/06→
TRANSIT Bus (FD_ _, FB_ _, FS_ _, FZ_ _, FC_ _)	01/00→05/06
TRANSIT Platform/Chassis ('06)	04/06→08/14
TRANSIT Platform/Chassis (FM_ _, FN_ _)	01/00→05/06
TRANSIT TOURNEO ('06)	07/06→08/14
TRANSIT Van/Box ('06)	04/06→

PEUGEOT

307 (3A/C)	08/00→
307 Break (3E)	03/02→12/09
307 SW (3H)	03/02→12/09
EXPERT Box (VF3A_, VF3U_, VF3X_)	01/07→
EXPERT Platform/Chassis	01/07→
EXPERT Tepee (VF3V_)	01/07→

TOYOTA

PROACE Box Body / Estate	06/13→03/16

AS4545

AUDI

COUPE (81, 85)	07/80→10/88
QUATTRO (85)	07/80→07/91

BMW

5 (E28)	06/80→12/87
7 (E23)	05/77→04/88

DAEWOO

ARANOS	01/95→11/97

FORD

CORTINA ('80)	07/79→07/82
CORTINA ('80) Estate	07/79→07/82
ESCORT '86 Express (AVF)	02/86→07/90
ESCORT III (GAA)	09/80→07/86
ESCORT III Convertible (ALD)	09/83→12/85
ESCORT III Estate (AWA)	09/80→12/85
ESCORT IV (GAF, AWF, ABFT)	03/83→10/90
ESCORT IV Convertible (ALF)	01/86→07/90
ESCORT IV Estate (AWF, AVF)	10/85→10/90
ORION I (AFD)	07/83→03/86
ORION II (AFF)	12/85→07/90
P 100 I	04/82→09/87
RANGER (ER, EQ)	04/97→06/06
RANGER (ET)	01/05→07/12

HONDA

ACCORD III (CA)	11/85→12/89
CIVIC III Hatchback (AL, AJ, AG, AH)	10/83→10/87
CIVIC III Saloon (AM, AK, AU)	10/83→10/87
CONCERTO (HW, MA)	08/89→10/96
CONCERTO Saloon (HWW)	08/89→05/95
INTEGRA (DA)	10/85→08/93
LEGEND I (HS, KA)	01/86→03/91
LEGEND I Coupe (KA3)	10/87→03/91

HYUNDAI

H100 Bus (P)	07/93→10/04

...AS4545

HYUNDAI

H100 Platform/Chassis	01/04→
SONATA II (Y-2)	09/88→12/93

ISUZU

MIDI Box (98000N)	06/88→07/96
MIDI Bus (94000, 98000)	06/88→07/96
MIDI Van (94000, 98000)	06/88→07/96
PIAZZA (JR_)	06/81→12/90

JEEP

COMMANDER (XK)	09/05→12/10

KIA

PRIDE (DA)	01/90→12/11
PRIDE Estate	08/98→05/01

LAND ROVER

DISCOVERY I (LJ_)	06/89→10/98

MAZDA

121 I (DA)	03/87→11/90
323 III (BF)	08/85→11/91
323 III Hatchback (BF)	08/85→08/93
323 III Station Wagon (BW)	01/86→10/98
B-SERIE (UF)	01/85→12/99
B-SERIE (UN)	11/98→11/06
MX-5 I (NA)	09/89→04/98
MX-5 II (NB)	01/98→10/05
MX-5 III (NC)	03/05→12/14

MG

EXPRESS Box	03/03→05/05
MG ZR	06/01→04/05

NISSAN

MICRA I (K10)	12/82→11/92
PATROL GR IV (Y60, GR)	08/87→02/98
PATROL III/1 Hardtop (K160)	11/79→02/89
PATROL III/1 Platform/Chassis (MQ, MK, GQ)	06/80→12/97
PATROL III/1 Station Wagon (W160)	11/79→02/89
PATROL III/2 Hardtop (K260)	10/84→04/98
PATROL III/2 Station Wagon (W260)	08/88→04/98
SKYLINE Coupe (R32)	03/89→01/95
SKYLINE Coupe (R33)	07/93→07/00
STANZA (T11)	08/81→12/85
STANZA Hatchback (T11)	08/81→12/85
TERRANO I (WD21)	07/86→02/96
URVAN Box (E23)	07/80→11/98
URVAN Box (E24)	06/86→05/97
URVAN Bus (E23)	07/80→11/88
URVAN Bus (E24)	06/86→05/97

OPEL

ASCONA B (81_, 86_, 87_, 88_)	09/75→08/81
ASCONA C (81_, 86_, 87_, 88_)	09/81→10/88
ASCONA C Hatchback (84_, 89_)	09/81→08/88
ASTRA F (56_, 57_)	09/91→09/98
ASTRA F CLASSIC Estate	01/98→01/05
ASTRA F CLASSIC Hatchback	01/98→08/02
ASTRA F CLASSIC Saloon	01/98→08/02
ASTRA F Convertible (53_B)	03/93→03/01
ASTRA F Estate (51_, 52_)	09/91→01/98
ASTRA F Hatchback (53_, 54_, 58_, 59_)	09/91→01/98
ASTRA F Van (55_)	10/91→01/99
CAMPO (TF_)	08/87→06/02
COMBO (71_)	07/94→10/01
CORSA B (73_, 78_, 79_)	03/93→12/02
CORSA B Box (73_)	08/99→09/00
CORSA B Estate (F35)	01/99→12/02
KADETT E (39_, 49_)	09/84→12/93
KADETT E Box (37_, 47_)	08/84→09/93
KADETT E Combo (38_, 48_)	01/86→07/94
KADETT E Convertible (43B_)	10/86→02/93
KADETT E Estate (35_, 36_, 45_, 46_)	09/84→08/91
KADETT E Hatchback (33_, 34_, 43_, 44_)	09/84→08/91
MANTA B (58_, 59_)	09/75→08/88

...AS4545

OPEL

MANTA B CC (53_, 55_)	09/75→08/88
MONZA A (22_)	02/78→08/86
REKORD E (17_-19_, 11_, 14_, 16_)	08/77→08/86
REKORD E Estate (61_, 66_, 67_)	08/77→08/86
TIGRA (95_)	07/94→12/00

PEUGEOT

205 Box	02/83→05/97
205 I (741A/C)	02/83→10/87
205 I Convertible (741B, 20D)	04/86→11/95
205 II (20A/C)	01/87→12/00
309 I (10C, 10A)	10/85→12/89
309 II (3C, 3A)	07/89→12/93
505 (551A)	05/79→10/96
505 Break (551D)	04/82→11/95
604 (561A_)	09/75→07/87

PORSCHE

968	06/91→11/95
968 Convertible	06/91→11/95

RENAULT

20 (127_)	10/75→12/83
30 (127_)	02/75→03/86
CLIO I (B/C57_, 5/357_)	05/90→09/98
CLIO I Box (S57_)	01/91→09/98
EXPRESS Pickup	07/95→10/99
RAPID / EXTRA Box (F40_, G40_)	07/85→11/01
SUPER 5 (B/C40_)	10/84→12/96
SUPER 5 Box (S40_)	10/84→12/96

ROVER

25 (RF)	09/99→06/06
200 (RF)	11/95→11/00
200 (XH)	03/85→09/89
200 Coupe (XW)	10/92→06/99
200 Hatchback (XW)	10/89→10/95
400 (XW)	04/90→04/95
400 Tourer (XW)	09/93→11/98
CABRIOLET (XW)	04/90→11/99
COUPE	03/96→11/99
STREETWISE	08/03→05/05

SKODA

FAVORIT (781)	05/89→09/94
FAVORIT Forman (785)	06/88→06/95

SSANGYONG

KORANDO (K4)	12/88→05/97
KORANDO (K4) Open Off-Road Vehicle	12/88→05/97
KORANDO (KJ)	12/96→11/06
KORANDO Cabrio (KJ)	12/96→11/06

VW

GOLF II (19E, 1G1)	08/83→12/92
JETTA II (19E, 1G2, 165)	08/83→12/92
PASSAT (32B)	11/79→06/89
PASSAT Saloon (32B)	08/84→06/89
PASSAT Variant (32B)	08/80→06/89
SANTANA (32B)	08/81→12/85
SCIROCCO (53)	02/74→07/80

AS4548

MINI

MINI (F55)	09/13→
MINI (F56)	04/13→
MINI (R50, R53)	06/01→09/06
MINI (R56)	11/05→11/13
MINI CLUBMAN (R55)	10/06→06/14
MINI Convertible (F57)	11/14→
MINI Convertible (R52)	07/04→11/07
MINI Convertible (R57)	10/07→06/15

AS4848

DAEWOO

ESPERO (KLEJ)	10/91→09/99
LANOS (KLAT)	05/97→
LANOS Saloon (KLAT)	02/97→

DODGE

NITRO	09/06→12/12

...AS4848

FIAT

BARCHETTA (183_)	03/95→05/05
CINQUECENTO (170_)	07/91→07/99
SEICENTO / 600 (187_)	01/98→01/10
SEICENTO / 600 Van (287_)	01/98→01/10
TIPO (160_)	07/87→10/97

FORD

FIESTA Box (F3L, F5L)	07/91→02/96
FIESTA Box (J5_, J3_)	02/96→
FIESTA Box (JV_)	05/98→08/03
FIESTA III (GFJ)	01/89→01/97
FIESTA IV (JA_, JB_)	08/95→09/02
MAVERICK	02/01→
PUMA (EC_)	03/97→06/02

HONDA

CR-V I (RD)	10/95→02/02
CRX I (AF, AS)	10/83→10/87
CRX II (ED, EE)	10/87→02/92

JEEP

CHEROKEE (KJ)	03/01→01/08
LIBERTY	01/08→

MAZDA

121 III (JASM, JBSM)	03/96→04/03
626 III (GD)	06/87→05/92
626 III Coupe (GD)	06/87→05/92
626 III Hatchback (GD)	06/87→05/92
626 III Station Wagon (GV)	09/87→10/98
929 III (HC)	05/87→06/91
TRIBUTE (EP)	03/00→05/08

MITSUBISHI

PAJERO / SHOGUN (II) (V3_W, V2_W, V4_W)	12/90→10/99
PAJERO / SHOGUN Soft Top (II) (V2_W, V4_W)	12/90→04/00

NISSAN

BLUEBIRD (T72 , T12)	12/85→12/90
BLUEBIRD (U11)	11/83→05/90
BLUEBIRD Hatchback (T72, T12)	12/85→11/92
BLUEBIRD Saloon (910)	01/80→06/86
BLUEBIRD Station Wagon (WU11)	11/83→12/90
LAUREL (JC32)	11/84→06/90
PICK UP II (D21)	09/85→02/98
PICK UP III (D22)	01/97→
PRAIRIE (M10, NM10)	12/82→10/88
PRAIRIE PRO (M11)	10/88→10/98
URVAN Box (E24)	06/86→05/97
URVAN Bus (E24)	06/86→05/97

OPEL

CALIBRA A (85_)	06/90→07/97
FRONTERA A (5_MWL4)	03/92→10/98
FRONTERA A Sport (5_SUD2)	03/92→10/98
FRONTERA B (6B_)	10/98→09/02
OMEGA A (16_, 17_, 19_)	09/86→05/94
OMEGA A Estate (66_, 67_)	09/86→05/94
SENATOR B (29_)	09/87→09/93
VECTRA A (86_, 87_)	08/88→12/95
VECTRA A Hatchback (88_, 89_)	04/88→12/95
VECTRA B (36_)	09/95→04/02
VECTRA B Estate (31_)	11/96→07/03
VECTRA B Hatchback (38_)	10/95→07/03

ROVER

800 (XS)	10/86→02/99
800 Hatchback (XS)	10/86→02/99

SEAT

AROSA (6H)	05/97→06/04

SUZUKI

GRAND VITARA I (FT)	03/98→08/06
GRAND VITARA I Convertible (GT)	03/98→09/05
GRAND VITARA II (JT)	04/05→
VITARA (ET)	12/03→12/05
VITARA Cabrio (ET)	12/03→12/05

VW

CORRADO (53I)	08/87→12/95
POLO (6N1)	10/94→10/99

...AS4848

VW

POLO (6N2)	10/99→10/01
POLO Box (6NF)	09/94→12/99
SCIROCCO (53B)	08/80→07/92

AS5145

CITROËN

SAXO (S0, S1)	02/96→04/04

HONDA

CRX III (EH, EG)	03/92→12/98
INSIGHT (ZE)	04/00→12/06
INTEGRA (DC5)	08/01→
PRELUDE V (BB)	10/96→04/01

HYUNDAI

LANTRA II (J-2)	06/95→12/00
LANTRA II Wagon (J-2)	06/95→10/00

MAZDA

RX 8 (SE17)	10/03→06/12

MG

MG ZS	07/01→04/05
MG ZS Hatchback	07/01→10/05

NISSAN

350 Z Coupe (Z33)	09/02→11/09
350 Z Roadster (Z33)	10/03→12/09
MICRA II (K11)	01/92→12/07

OPEL

AGILA (A) (H00)	09/00→12/07
CORSA C (F08, F68)	09/00→12/09
CORSA C Box (F08, W5L)	09/00→
TIGRA TwinTop	06/04→

PEUGEOT

106 I (1A, 1C)	08/91→04/96
106 II (1)	04/96→05/05
106 Van (1_)	08/91→03/01

ROVER

45 (RT)	02/00→05/05
45 Saloon (RT)	02/00→05/05
400 (RT)	05/95→03/00
400 Hatchback (RT)	05/95→03/00

SMART

ROADSTER (452)	04/03→11/05
ROADSTER Coupe (452)	04/03→11/05

SSANGYONG

MUSSO (FJ)	01/93→09/07
MUSSO SPORTS	08/04→

SUZUKI

SWIFT Convertible (SF413)	09/91→10/96
SWIFT II Hatchback (EA, MA)	03/89→12/05
SWIFT II Saloon (AH, AJ)	03/89→05/01
WAGON R	07/03→05/08
WAGON R+ (EM)	10/97→10/00
WAGON R+ (MM)	05/00→

TOYOTA

COROLLA (_E10_)	06/91→11/99
COROLLA (_E11_)	04/97→06/02
COROLLA Compact (_E10_)	05/92→11/99
COROLLA Compact (_E11_)	04/97→01/02
COROLLA Liftback (_E10_)	05/92→04/97
COROLLA Liftback (_E11_)	04/97→01/02
COROLLA Wagon (__E11_)	04/97→10/01
COROLLA Wagon (_E10_)	05/92→04/97
RAV 4 I (SXA1_)	01/94→09/00
RAV 4 I Cabrio (SXA1_)	12/97→06/00

AS5148

HONDA

LEGEND II (KA7)	01/91→03/96
LEGEND II Coupe (KA8)	01/91→03/96
LEGEND III (KA9)	02/96→
PRELUDE IV (BB)	12/91→02/97

HYUNDAI

LANTRA I (J-1)	10/90→11/95

MITSUBISHI

SIGMA (F2_A, F1_A)	10/90→07/96
SIGMA Station Wagon (F0_W)	06/92→10/96

...AS5148

OPEL

ASTRA G Box (F70)	01/99→04/05
ASTRA G CLASSIC Caravan (F35)	03/04→07/09
ASTRA G CLASSIC Saloon (T98)	03/04→07/09
ASTRA G Convertible (F67)	03/01→10/05
ASTRA G Coupe (F07_)	03/00→05/05
ASTRA G Estate (F35_)	02/98→12/09
ASTRA G Hatchback (F48_, F08_)	02/98→12/09
ASTRA G Saloon (F69_)	09/98→12/09

SUZUKI

SWIFT V (AZ)	01/17→

AS5345

CHRYSLER

NEON (PL)	05/94→09/00

DODGE

NEON	05/94→08/99

KIA

K2700	01/04→
K2700 (SD)	10/99→
PREGIO Box (TB)	10/97→
PREGIO Bus	08/95→09/04

MAZDA

323 C IV (BG)	06/89→09/00
323 C V (BA)	08/94→01/01
323 F IV (BG)	04/87→10/94
323 F V (BA)	07/94→09/98
323 P V (BA)	10/96→09/98
323 S IV (BG)	06/89→05/95
323 S V (BA)	09/92→12/03
MX-3 (EC)	07/91→09/98

NISSAN

MICRA C+C III (K12)	08/05→
MICRA III (K12)	03/02→06/10

RENAULT

CLIO II (BB0/1/2_, CB0/1/2_)	09/98→
CLIO II Box (SB0/1/2_)	09/98→
THALIA I (LB0/1/2_)	02/98→

SUBARU

IMPREZA Coupe (GFC)	01/93→12/00
IMPREZA Estate (GF)	08/92→12/00
IMPREZA Saloon (GC)	08/92→09/01
JUSTY II (JMA, MS)	10/95→11/03
LEGACY I (BC)	01/89→08/94
LEGACY I Estate (BC, BJF)	01/89→08/94

SUZUKI

SWIFT III (MZ, EZ)	02/05→

TOYOTA

AVENSIS (_T22_, ZZT22_)	09/97→02/03
AVENSIS Liftback (_T22_, ST22_)	09/97→02/03
AVENSIS Station Wagon (_T22_, ZZT22_)	09/97→02/03
CARINA E (_T19_)	04/92→09/97

VW

CADDY II Box (9K9A)	11/95→01/04
CADDY II Estate (9K9B)	11/95→01/04
CADDY II Pickup (9U7)	06/96→12/00
POLO CLASSIC (6KV2)	11/95→07/06
POLO Variant (6KV5)	04/97→09/01
POLO VIVO Hatchback	02/10→
POLO VIVO Saloon	02/10→

AS5348

CHEVROLET

LACETTI (J200)	03/03→
LACETTI Estate (J200)	03/05→
LACETTI Saloon	03/03→03/13

DAEWOO

LEGANZA (KLAV)	03/97→04/04

FIAT

COUPE (175_)	11/93→08/00

KIA

CLARUS (K9A)	05/96→11/01
CLARUS Estate (GC)	05/98→

...AS5348

KIA

K2500 (SD)	06/01→
K2900	01/08→
MENTOR	01/95→10/97
MENTOR Saloon	01/92→09/01
SHUMA (FB)	09/96→12/01
SHUMA II (FB)	05/01→08/04
SHUMA II Saloon (FB)	05/01→05/04
SHUMA Saloon (FB)	03/96→10/01

MAZDA

323 F VI (BJ)	09/98→05/04
323 S VI (BJ)	05/98→05/04
626 V (GF)	05/97→12/02
626 V Hatchback (GF)	05/97→12/02
626 V Station Wagon (GW)	01/98→12/02

MITSUBISHI

COLT V (CJ_, CP_)	09/95→09/03
LANCER VI (CJ-CP_)	09/95→08/03
MIRAGE Hatchback (CJ_A)	09/95→07/03
MIRAGE Saloon (CK_A)	09/95→07/03

NISSAN

100 NX (B13)	03/90→01/96
ALMERA I (N15)	07/95→07/00
ALMERA I Hatchback (N15)	07/95→01/01

SEAT

AROSA (6H)	05/97→06/04
CORDOBA (6K1, 6K2)	02/93→10/02
CORDOBA (6K2)	06/99→10/02
CORDOBA (6L2)	09/02→11/09
CORDOBA Vario (6K5)	06/99→12/02
CORDOBA Vario (6K5)	08/96→12/02
IBIZA II (6K1)	03/93→02/02
IBIZA III (6K1)	08/99→02/02
IBIZA IV (6L1)	02/02→11/09
LEON (1M1)	11/99→06/06
TOLEDO II (1M2)	10/98→05/06

SKODA

FABIA (6Y2)	08/99→03/08
FABIA Combi (6Y5)	04/00→12/07
FABIA Praktik	07/01→12/07
FABIA Saloon (6Y3)	10/99→12/07
OCTAVIA (1U2)	09/96→12/10
OCTAVIA Combi (1U5)	07/98→12/10
SUPERB (3U4)	12/01→03/08

SSANGYONG

ACTYON I	11/05→
ACTYON II	08/12→
ACTYON SPORTS I (QJ)	11/05→
ACTYON SPORTS II	10/12→

SUBARU

FORESTER (SF)	03/97→09/02
FORESTER (SG)	06/02→10/12
LEGACY II (BD, BG)	03/94→10/99
LEGACY II Estate (BD, BG)	02/94→12/99
LEGACY OUTBACK (BG)	01/96→12/99

TOYOTA

CAMRY (_CV2_, _XV2_)	08/96→11/01
CAMRY Station Wagon (_XV1_, _CV1_, _V10)	06/91→08/97
CELICA (ST20_, AT20_)	09/93→11/99
CELICA Convertible (AT20_, ST20_)	11/93→08/99
HILUX III Pickup (KUN_, TGN_, LAN_, GGN_)	08/04→

VW

BORA (1J2)	10/98→09/05
BORA Estate (1J6)	05/99→05/05
GOLF III (1H1)	08/91→07/98
GOLF III Cabriolet (1E7)	07/93→05/98
GOLF III Variant (1H5)	07/93→04/99
GOLF IV (1J1)	08/97→06/05
GOLF IV Cabriolet (1E7)	06/98→06/02
GOLF IV Variant (1J5)	05/99→06/06
LUPO (6X1, 6E1)	09/98→07/05
POLO (9N_)	10/01→01/12
VENTO (1H2)	11/91→09/98

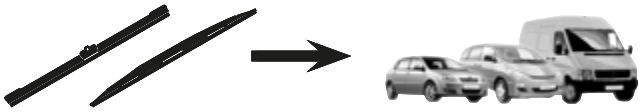

AS5541

ALFA ROMEO
147 (937_) 11/00→12/10
GT (937_) 11/03→09/10

DACIA
DOKKER 11/12→
DOKKER Express 12/12→
LODGY 03/12→

FIAT
IDEA (350_) 12/03→
PANDA (169_) 09/03→
PANDA Van (169_) 03/04→

FORD
ECOSPORT 09/11→
FIESTA V (JH_, JD_) 11/01→03/10
FIESTA V Van 10/03→12/10
FUSION (JU_) 08/02→12/12

HYUNDAI
ACCENT III (MC) 11/05→12/10
ACCENT III Saloon (MC) 11/05→11/10
MATRIX (FC) 06/01→08/10

KIA
PICANTO (BA) 04/04→
PICANTO (TA) 05/11→
RIO II (JB) 03/05→
RIO II Saloon (JB) 03/05→

MAZDA
2 (DL, DJ) 11/14→
2 Saloon (DL) 01/15→

OPEL
AGILA (B) (H08) 04/08→

SUBARU
IMPREZA Hatchback 10/00→12/07

TOYOTA
HILUX VIII Platform/Chassis (_N1_) 05/15→
YARIS VERSO (_NLP2_, _NCP2_) 08/99→09/05

AS5545

CHRYSLER
VOYAGER I (AS) 08/84→09/90

CITROËN
C3 Pluriel (HB_) 05/03→

FIAT
DOBLO Cargo (223_) 11/00→
DOBLO MPV (119_, 223_) 03/01→
FULLBACK Pickup (KT_) 01/16→
PUNTO (188_) 09/99→07/12
PUNTO Van (188_) 02/00→10/09

HYUNDAI
COUPE (GK) 01/01→11/09
COUPE (RD) 06/96→04/02
SANTAMO 10/98→12/02
TIBURON Coupe 01/01→12/08

KIA
JOICE 02/00→

MAZDA
6 (GG) 06/02→12/08
6 Hatchback (GG) 08/02→12/08
6 Station Wagon (GY) 08/02→12/07

MITSUBISHI
GALANT VI (EA_) 09/96→10/04
GALANT VI Estate (EA_) 09/96→10/03
OUTLANDER I (CU_W) 03/01→12/06
SANTAMO 03/99→12/04
SPACE RUNNER (N1_W, N2_W) 10/91→08/99
SPACE RUNNER (N6_W) 08/99→01/03
SPACE WAGON (N3_W, N4_W) 05/91→11/98

TOYOTA
COROLLA (CDE12_, ZZE12_, NDE12_, ZDE12_) 01/01→12/07
COROLLA Saloon (_E12J_, _E12T_) 08/00→03/08

AS5548

CHRYSLER
NEON II 08/99→12/06

...AS5548

DODGE
NEON II 08/99→

FIAT
STILO (192_) 10/01→11/10
STILO Multi Wagon (192_) 01/03→08/08

FORD
FOCUS (DAW, DBW) 10/98→12/07
FOCUS Estate (DNW) 02/99→12/07
FOCUS Saloon (DFW) 02/99→12/07

HONDA
ACCORD IV (CB) 11/89→12/93
ACCORD IV Aerodeck (CB) 09/89→12/93
ACCORD IV Coupe (CB, CC) 05/89→12/93
ACCORD VI (CG, CK) 03/97→12/03
ACCORD VI Hatchback (CH) 12/99→12/02

HYUNDAI
SONATA IV (EF) 03/98→12/05

ISUZU
D-MAX (8DH) 05/02→06/12
D-MAX (TFR, TFS) 06/12→
D-MAX Platform/Chassis 06/12→
D-MAX Platform/Chassis (8DH) 01/07→06/12

JAGUAR
X-TYPE (CF1_) 03/01→11/09
X-TYPE Estate (CF1_) 09/03→12/09

LEXUS
IS I (JCE1_, GXE1_) 04/99→07/05
IS SportCross 10/01→10/05

MITSUBISHI
GALANT V (E5_A, E7_A, E8_A) 11/92→10/96
GALANT V Saloon (E5_A, E7_A, E8_A) 11/92→12/98

NISSAN
VANETTE Box (C22) 10/86→12/11
VANETTE Bus (C22) 10/86→12/11

AS5551

ALFA ROMEO
GTV (916_) 09/94→10/05

BMW
X3 (E83) 01/03→12/11
Z4 ROADSTER (E89) 05/09→

CITROËN
XSARA (N1) 04/97→12/05
XSARA Box 05/98→08/05
XSARA Break (N2) 10/97→03/10
XSARA Coupe (N0) 01/98→04/05

DACIA
LOGAN II 10/12→
LOGAN MCV II 02/13→
SANDERO II 10/12→

FORD
COUGAR (EC_) 08/98→12/01
MONDEO III (B5Y) 10/00→03/07
MONDEO III Estate (BWY) 10/00→03/07
MONDEO III Saloon (B4Y) 10/00→03/07

HONDA
ACCORD V (CC, CD) 06/92→12/97
ACCORD V (CE, CF) 09/95→10/98
ACCORD V Aerodeck (CE) 04/93→02/98
ACCORD V Coupe (CD) 04/93→12/98

HYUNDAI
SANTA FÉ I (SM) 11/00→03/06
TERRACAN (HP) 06/01→03/08
XG (XG) 12/98→12/05
XG Saloon 09/00→12/05

INFINITI
FX ('02) 09/02→12/08
I30 01/97→
QX4 01/97→

JEEP
COMPASS (MK49) 08/06→

KIA
MAGENTIS (GD) 05/01→

MAZDA
MPV I (LV) 09/88→09/99

...AS5551

PEUGEOT
306 (7B, N3, N5) 04/93→10/03
306 Box Body / Hatchback 04/93→08/01
306 Break (7E, N3, N5) 06/94→04/02
306 Convertible (7D, N3, N5) 01/94→04/02
306 Hatchback (7A, 7C, N3, N5) 01/93→10/03
306 Van (N_, 7_) 07/93→08/02

RENAULT
LOGAN II 09/12→
LOGAN II Estate (K8_) 12/13→
MEGANE I (BA0/1_) 08/95→12/04
MEGANE I Cabriolet (EA0/1_) 10/96→08/03
MEGANE I Classic (LA0/1_) 09/96→08/08
MEGANE I Coach (DA0/1_) 03/96→08/03
MEGANE I Grandtour (KA0/1_) 03/99→08/03
SANDERO/STEPWAY II 11/13→

ROVER
600 (RH) 08/93→10/00

AS5555

AUDI
100 (4A, C4) 12/90→07/94
100 Avant (4A, C4) 12/90→07/94
A6 (4A, C4) 06/94→10/97
A6 (4B2, C5) 01/97→01/05
A6 Avant (4A, C4) 06/94→12/97
A6 Avant (4B5, C5) 11/97→01/05
A8 (4D2, 4D8) 03/94→12/02
ALLROAD (4BH, C5) 05/00→08/05
CABRIOLET (8G7, B4) 05/91→08/00
COUPE (89, 8B) 10/88→12/96

BENTLEY
AZURE 09/95→06/06

CHEVROLET
CORVETTE ('97) 01/97→12/04
CORVETTE Convertible 09/97→09/04
TRAILBLAZER (KC_) 09/01→12/09

CHRYSLER
300 C 09/10→
300 C (LX) 09/04→
300 C Touring (LX) 09/04→12/10
SEBRING (JR) 09/00→06/07
SEBRING Convertible (JR) 04/01→06/07
STRATUS (JA) 09/94→04/01
STRATUS Convertible (JX) 04/96→04/01

CITROËN
BERLINGO (MF) 07/96→12/11
BERLINGO Box (M_) 07/96→12/11
RELAY Bus (230P) 02/94→04/02
RELAY Bus (244, Z_) 04/02→
RELAY Platform/Chassis (230) 03/94→04/02
RELAY Platform/Chassis (244) 02/02→
RELAY Van/Box (230L) 02/94→04/02
RELAY Van/Box (244) 04/02→
XM (Y3) 05/89→10/94
XM (Y4) 05/94→10/00
XM Break (Y3) 05/89→07/94
XM Break (Y4) 05/94→10/00

DODGE
STRATUS 09/94→04/01

FIAT
DUCATO Box (230_) 03/94→05/05
DUCATO Box (244_) 04/02→
DUCATO Bus (230_) 03/94→04/02
DUCATO Bus (244_) 04/02→
DUCATO Platform/Chassis (230_) 03/94→04/02
DUCATO Platform/Chassis (244_) 04/02→

FORD
TRANSIT TOURNEO ('94) 08/94→12/00

HONDA
PILOT 09/08→

ISUZU
IMPULSE 01/90→12/93

JAGUAR
S-TYPE (CCX_) 01/99→12/08

...AS5555

LAND ROVER
RANGE ROVER II (LP_) 07/94→03/02

MERCEDES-BENZ
SLK (R170) 04/96→04/04

MG
MG X-POWER 01/03→04/08
MG ZT 06/01→07/05
MG ZT- T 10/01→07/05

PEUGEOT
605 (6B) 06/89→09/99
PARTNER Box (5) 04/96→12/15
PARTNER Combispace (5F) 05/96→12/15
PARTNER Platform/Chassis 01/99→07/08

RENAULT
25 (B29_) 04/84→12/93
ESPACE I (J11_) 07/84→12/92

ROVER
75 (RJ) 02/99→05/05
75 Tourer (RJ) 08/01→06/06

AS6048

CHEVROLET
ORLANDO (J309) 12/10→

CITROËN
XANTIA (X2) 01/98→04/03
XANTIA Break (X2) 01/98→04/03

FIAT
FREEMONT (JC_, JF_) 08/11→

HYUNDAI
GENESIS (BH) 01/08→12/15
GENESIS Coupe 01/08→
SONATA V (NF) 12/04→11/12

INFINITI
FX ('08) 07/08→
QX70 08/13→

KIA
CARENS I (FC) 06/99→10/02
CARENS II (FJ) 07/02→
CERATO II (TD) 01/09→
CERATO II Saloon (TD) 01/09→
CERATO KOUP (TD) 01/09→

OPEL
OMEGA B (25_, 26_, 27_) 03/94→07/03
OMEGA B Estate (21_, 22_, 23_) 03/94→07/03
SIGNUM 05/03→12/08
VECTRA C 04/02→
VECTRA C Estate 10/03→
VECTRA C GTS 08/02→

RENAULT
LAGUNA I (B56_, 556_) 11/93→08/02
LAGUNA I Grandtour (K56_) 09/95→08/02

TOYOTA
RAV 4 II (CLA2_, XA2_, ZCA2_, ACA2_) 06/00→11/05

AS6060

ALPINA
B10 (E34) 04/88→04/95
B10 Estate (E34) 11/93→04/96
B12 (E38) 12/95→07/01

BMW
5 (E34) 12/87→11/95
5 Touring (E34) 11/91→01/97
7 (E32) 09/86→10/94
7 (E38) 10/94→11/01
8 (E31) 04/90→12/99

RENAULT
SAFRANE I (B54_) 04/92→10/97
SAFRANE II (B54_) 07/96→12/00

AS6541

HONDA
ACCORD VII (CL) 01/03→09/12
ACCORD VII (CM) 09/02→05/08
ACCORD VII Tourer (CM) 04/03→05/08

...AS6541

HONDA
- ACCORD IX Saloon (CR) 09/12→
INFINITI
- G Convertible 09/10→
- G Coupe 09/07→
- G Saloon ('07) 01/07→
- Q50 04/13→
- Q60 Convertible 10/13→
- Q60 Coupe 10/13→
KIA
- CARENS III (UN) 09/06→
- SEDONA III 09/05→
MAZDA
- 5 (CR19) 02/05→12/10
- 5 (CW) 09/10→
PEUGEOT
- 206+ (T3E) 01/09→
- 206 CC (2D) 09/00→
- 206 Hatchback (2A/C) 08/98→
- 206 Saloon 03/07→
- 206 SW (2E/K) 07/02→
- 206 Van 04/99→03/09
TOYOTA
- AURIS (NRE15_, ZZE15_, ADE15_, ZRE15_, NDE15_) 10/06→09/12
- AVENSIS VERSO (_CLM2_, _ACM2_) 08/01→11/09
- COROLLA Verso (ZDE12_, CDE12_) 07/01→07/04
- COROLLA Verso (ZER_, ZZE12_, R1_) 03/04→04/09
- PRIUS Hatchback (NHW20_) 08/03→03/09

ASC5348

AUDI
- A3 (8L1) 09/96→06/03
SEAT
- AROSA (6H) 05/97→06/04
- CORDOBA (6K2) 06/99→10/02
- CORDOBA (6L2) 09/02→11/09
- CORDOBA Vario (6K5) 06/99→12/02
- IBIZA III (6K1) 08/99→02/02
- IBIZA IV (6L1) 02/02→11/09
- LEON (1M1) 11/99→06/06
- TOLEDO II (1M2) 10/98→05/06
SKODA
- FABIA (6Y2) 08/99→03/08
- FABIA Combi (6Y5) 04/00→12/07
- FABIA Praktik 07/01→12/07
- FABIA Saloon (6Y3) 10/99→12/07
- OCTAVIA (1U2) 09/96→12/10
- OCTAVIA Combi (1U5) 07/98→12/10
- SUPERB (3U4) 12/01→03/08
VW
- BORA (1J2) 10/98→09/05
- BORA Estate (1J6) 05/99→05/05
- GOLF III (1H1) 08/91→07/98
- GOLF III Cabriolet (1E7) 07/93→05/98
- GOLF III Variant (1H5) 07/93→04/99
- GOLF IV (1J1) 08/97→06/05
- GOLF IV Cabriolet (1E7) 06/98→06/02
- GOLF IV Variant (1J5) 05/99→06/06
- LUPO (6X1, 6E1) 09/98→07/05
- POLO (9N_) 10/01→01/12
- POLO CLASSIC (6KV2) 11/95→07/06
- POLO Variant (6KV5) 04/97→09/01
- POLO VIVO Hatchback 02/10→
- POLO VIVO Saloon 02/10→
- VENTO (1H2) 11/91→09/98

ASC5353

AUDI
- A4 (8D2, B5) 11/94→09/01
- A4 Avant (8D5, B5) 11/94→09/01
- TT (8N3) 10/98→06/06
- TT Roadster (8N9) 10/99→06/06
VW
- NEW BEETLE (9C1, 1C1) 01/98→09/10

...ASC5353

VW
- NEW BEETLE Convertible (1Y7) 09/02→10/10
- PASSAT (3B3) 11/00→05/05
- PASSAT Variant (3B6) 10/00→08/05

ASC5553

ALFA ROMEO
- 156 (932_) 09/97→09/05
- 156 Sportwagon (932_) 01/00→05/06
LANCIA
- LYBRA (839_) 07/99→10/05
- LYBRA SW (839_) 07/99→10/05
PORSCHE
- 911 (996) 09/97→08/05
- 911 (997) 07/04→12/12
- 911 Convertible (996) 02/98→08/05
- 911 Convertible (997) 04/05→12/12
- 911 Targa (996) 12/01→08/05
- 911 Targa (997) 07/06→12/12
- BOXSTER (986) 09/96→12/04
- BOXSTER (987) 11/04→12/11
- BOXSTER Spyder (987) 09/07→12/11
- CAYMAN (987) 11/05→12/13

ASC6055

MERCEDES-BENZ
- C-CLASS (W203) 05/00→08/07
- C-CLASS Coupe (CL203) 03/01→06/11
- C-CLASS T-Model (S203) 03/01→08/07
VOLVO
- S60 I 07/00→04/10
- S80 I (TS, XY) 05/98→02/08
- V70 II (SW) 11/99→12/08
- XC70 CROSS COUNTRY 10/97→10/07
- XC90 I 06/02→12/14
VW
- MULTIVAN V (7HM, 7HN, 7HF, 7EF, 7EM, 7EN) 04/03→08/15
- TRANSPORTER V Box (7HA, 7HH, 7EA, 7EH) 04/03→08/15
- TRANSPORTER V Bus (7HB, 7HJ, 7EB, 7EJ, 7EF, 7EG, 7HF, 7EC) 04/03→08/15
- TRANSPORTER V Platform/Chassis (7JD, 7JE, 7JL, 7JY, 7JZ, 7FD 04/03→08/15

ASW7065

MERCEDES-BENZ
- VIANO (W639) 09/03→
- VITO Bus (W639) 09/03→
- VITO / MIXTO Box (W639) 09/03→

AW45

ALFA ROMEO
- GTV (916_) 09/94→10/05
- SPIDER (916_) 09/94→04/05
JAGUAR
- S-TYPE (CCX_) 01/99→12/08
- XJ (N3_) 03/03→03/09
RENAULT
- AVANTIME (DE0_) 09/01→05/03
- ESPACE III (JE0_) 11/96→10/02

AW55

ALFA ROMEO
- GTV (916_) 09/94→10/05
- SPIDER (916_) 09/94→04/05
MERCEDES-BENZ
- V-CLASS (638/2) 02/96→07/03
- VITO Box (638) 03/97→07/03
- VITO Bus (638) 02/96→07/03
PEUGEOT
- 405 I (15B) 01/87→12/93
- 405 I Break (15E) 06/87→08/92
- 405 II (4B) 01/92→11/99
- 405 II Break (4E) 08/92→10/98

AW60

IVECO
- DAILY IV Box Body / Estate 05/06→03/12

...AW60

IVECO
- DAILY IV Bus 05/06→08/11
- DAILY IV Dumptruck 05/06→08/11
- DAILY IV Platform/Chassis 05/06→09/11
- DAILY V Box Body / Estate 09/11→02/14
- DAILY V Dumptruck 09/11→02/14
- DAILY V Platform/Chassis 09/11→02/14
JAGUAR
- S-TYPE (CCX_) 01/99→12/08
- XJ (N3_) 03/03→03/09
LOTUS
- ELISE ('00) 11/00→
- ELISE 340 R 02/00→02/01
- EUROPA S 07/06→
- EXIGE 06/12→
- EXIGE (SCC_) 05/00→06/12
NISSAN
- INTERSTAR Box (X70) 04/02→
- INTERSTAR Bus (X70) 04/02→
- INTERSTAR Platform/Chassis 08/03→
OPEL
- MOVANO Box (F9) 01/99→
- MOVANO Combi (J9) 07/98→
- MOVANO Dumptruck (H9) 01/99→
- MOVANO Platform/Chassis (U9, E9) 07/98→
RENAULT
- ESPACE II (J/S63_) 01/91→10/97
- MASTER II Box (FD) 07/98→
- MASTER II Bus (JD) 03/98→
- MASTER II Platform/Chassis (ED/HD/UD) 07/98→

AW65

CITROËN
- C8 (EA_, EB_) 07/02→
FIAT
- ULYSSE (179_) 08/02→06/11
LANCIA
- PHEDRA (179_) 09/02→11/10
MERCEDES-BENZ
- V-CLASS (638/2) 02/96→07/03
- VITO Box (638) 03/97→07/03
- VITO Bus (638) 02/96→07/03
PEUGEOT
- 807 (E) 06/02→
RENAULT
- AVANTIME (DE0_) 09/01→05/03
- ESPACE III (JE0_) 11/96→10/02

AW6060

IVECO
- DAILY IV Box Body / Estate 05/06→03/12
- DAILY IV Bus 05/06→08/11
- DAILY IV Dumptruck 05/06→08/11
- DAILY IV Platform/Chassis 05/06→09/11
- DAILY V Box Body / Estate 09/11→02/14
- DAILY V Dumptruck 09/11→02/14
- DAILY V Platform/Chassis 09/11→02/14
NISSAN
- INTERSTAR Box (X70) 04/02→
- INTERSTAR Bus (X70) 04/02→
- INTERSTAR Platform/Chassis 08/03→
OPEL
- MOVANO Box (F9) 01/99→
- MOVANO Combi (J9) 07/98→
- MOVANO Dumptruck (H9) 01/99→
- MOVANO Platform/Chassis (U9, E9) 07/98→
RENAULT
- ESPACE II (J/S63_) 01/91→10/97
- MASTER II Box (FD) 07/98→
- MASTER II Bus (JD) 03/98→
- MASTER II Platform/Chassis (ED/HD/UD) 07/98→

AW6555

MERCEDES-BENZ
- V-CLASS (638/2) 02/96→07/03

...AW6555

MERCEDES-BENZ
- VITO Box (638) 03/97→07/03
- VITO Bus (638) 02/96→07/03

R29

FIAT
- CINQUECENTO (170_) 07/91→07/99

R32

FIAT
- PANDA (141_) 03/80→07/04
- PANDA Van (141_) 01/86→02/04
- TEMPRA S.W. (159_) 03/90→10/97
- UNO (146_) 01/83→06/06
- UNO (146_) 08/00→12/13
- UNO Box (146_) 02/88→07/96
LANCIA
- Y10 (156_) 03/85→12/95

R33

ALFA ROMEO
- 145 (930_) 07/94→01/01
FIAT
- BRAVO I (182_) 10/95→10/01
- PALIO (178BX) 04/96→
- PALIO Weekend (178_) 04/96→
- PANDA (169_) 09/03→
- PUNTO (176_) 09/93→09/99
- PUNTO Van (176_) 04/96→02/00
- SEICENTO / 600 (187_) 01/98→01/10
LANCIA
- KAPPA SW (838_) 07/96→10/01
- MUSA (350_) 10/04→09/12
- YPSILON (843_) 10/03→12/11

R35

FIAT
- DOBLO MPV (119_, 223_) 03/01→
- MULTIPLA (186_) 04/99→06/10
- PUNTO (188_) 09/99→07/12
- PUNTO Van (188_) 02/00→10/09

R38

ALFA ROMEO
- 147 (937_) 11/00→12/10
- 156 Sportwagon (932_) 01/00→05/06
FIAT
- CROMA (194_) 06/05→
- IDEA (350_) 12/03→
LANCIA
- Y (840_) 11/95→09/03

R40

FIAT
- TIPO (160_) 07/87→10/97

R41

CITROËN
- BERLINGO (MF) 07/96→12/11
- BERLINGO Box (M_) 07/96→12/11
LANCIA
- DEDRA SW (835_) 07/94→07/99
- LYBRA SW (839_) 07/99→10/05

R50

ALFA ROMEO
- 146 (930_) 12/94→01/01
CITROËN
- C5 I (DC_) 03/01→03/05
FIAT
- CROMA (154_) 12/85→12/96
NISSAN
- PRIMERA Hatchback (P12) 01/02→
RENAULT
- LAGUNA II (BG0/1_) 03/01→

R51

ALFA ROMEO
- 145 (930_) 07/94→01/01

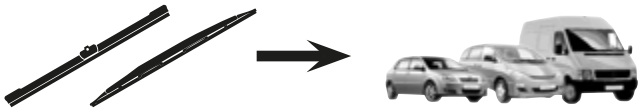

...R51

ALFA ROMEO

146 (930_)	12/94→01/01

FIAT

TEMPRA (159_)	03/90→12/98
TEMPRA S.W. (159_)	03/90→10/97
TIPO (160_)	07/87→10/97

R53

LAND ROVER

DISCOVERY II (LT_)	10/98→08/04

R55

AUDI

A4 (8E2, B6)	11/00→12/04
A4 Avant (8E5, B6)	04/01→12/04
A4 Convertible (8H7, B6, 8HE, B7)	04/02→03/09

R65C

BMW

5 (E39)	09/95→06/03
5 Touring (E39)	09/96→05/04

R65D

PEUGEOT

607 (9D, 9U)	01/00→

T65H01

SUBARU

TRIBECA (B9)	01/05→

T70H01

AUDI

A2 (8Z0)	02/00→08/05

MITSUBISHI

GRANDIS (NA_W)	03/03→12/11

TOYOTA

PREVIA (MCR3_, ACR3_, CLR3_)	02/00→01/06

PREMIUM PERFORMANCE

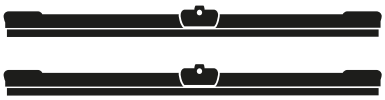

Kit x 2

A

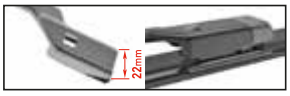

B

B

C

D

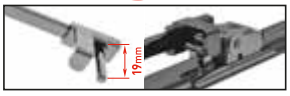

E

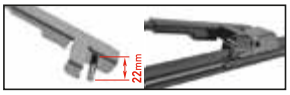

F

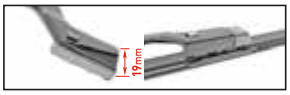

G

H

J

K

L

M

A CR1206

B CR1203

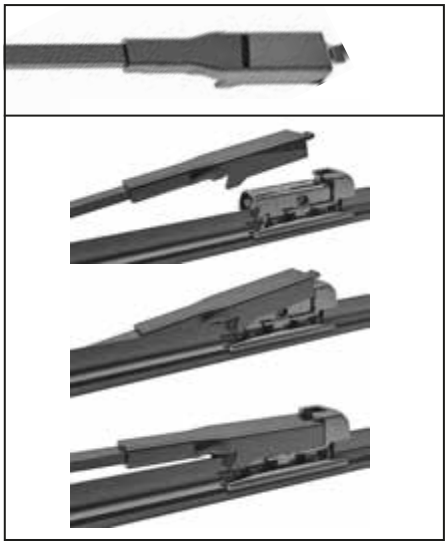

E CR1202

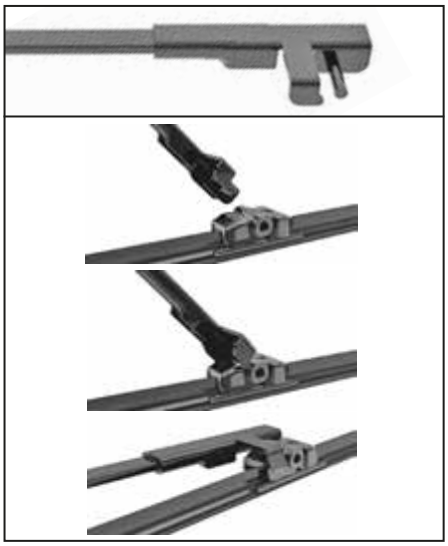

E CR1213

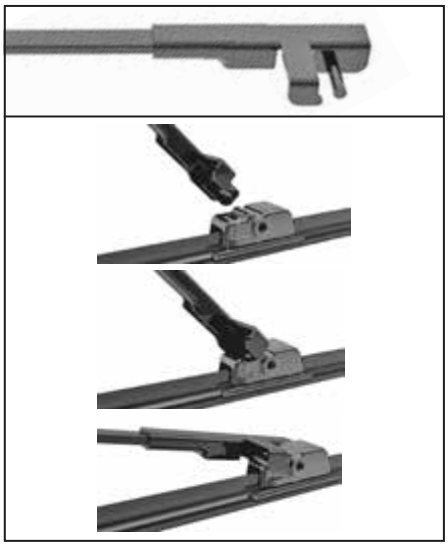

J Special

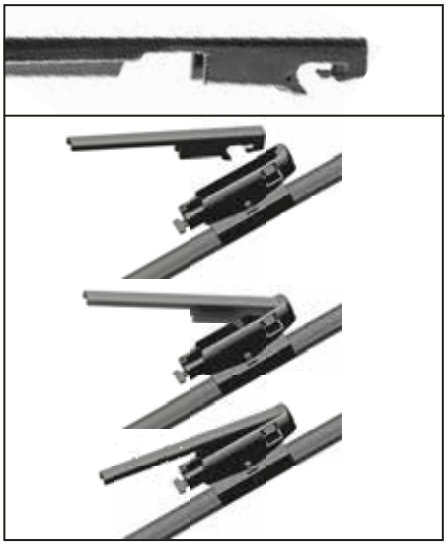

K Special

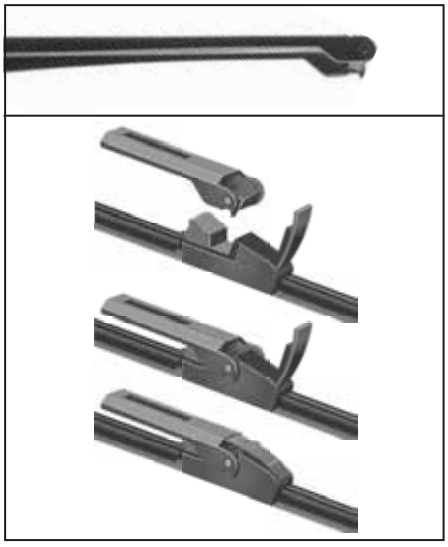

CHAMPION

B CR1214

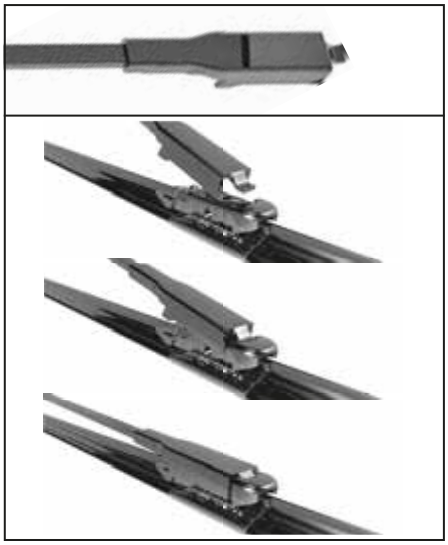

C CR1203

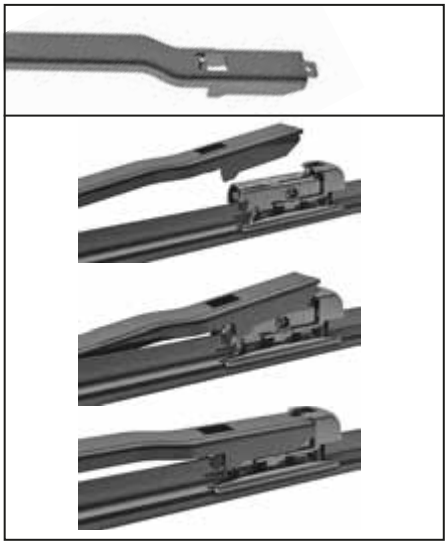

D CR1208

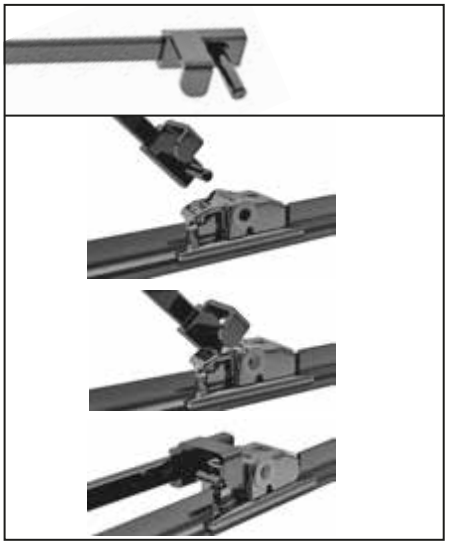

F CR1209

G CR1207

H Special

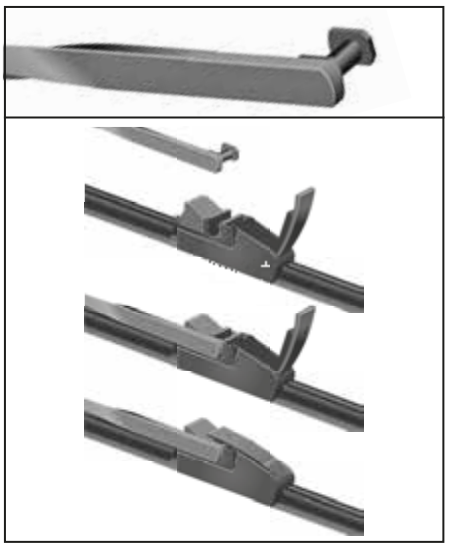

L 9x3, 9x4

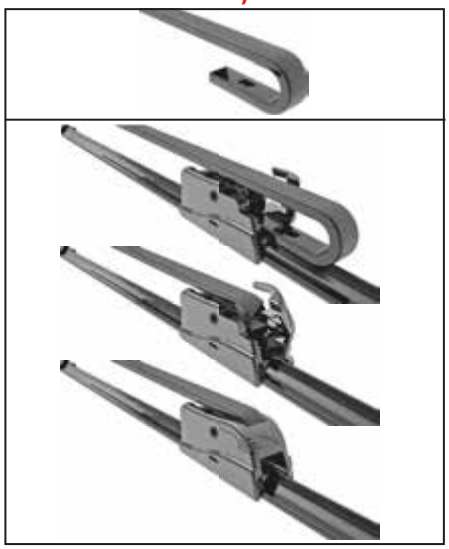

M CR3007

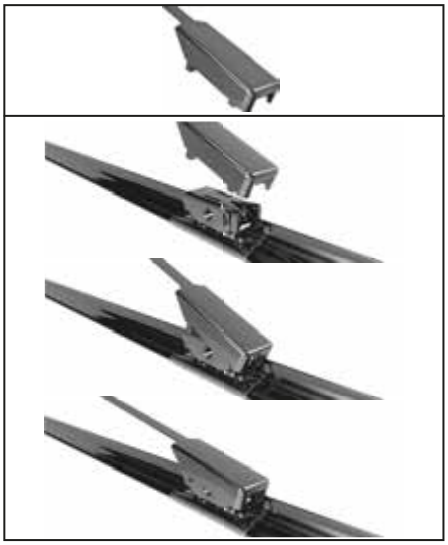

PREMIUM PERFORMANCE

x 1

A

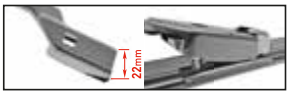

A

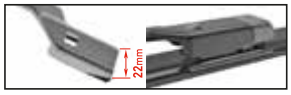

B

B

C

D

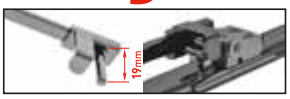

E

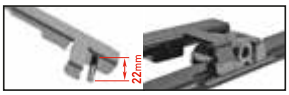

F

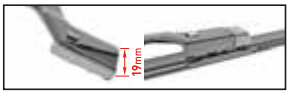

G

A CR1211

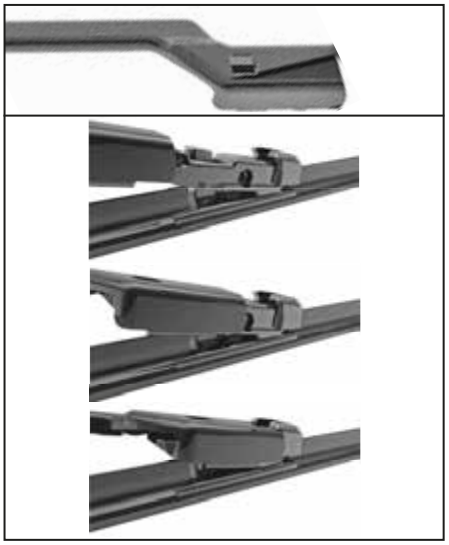

A CR1206

B CR1214

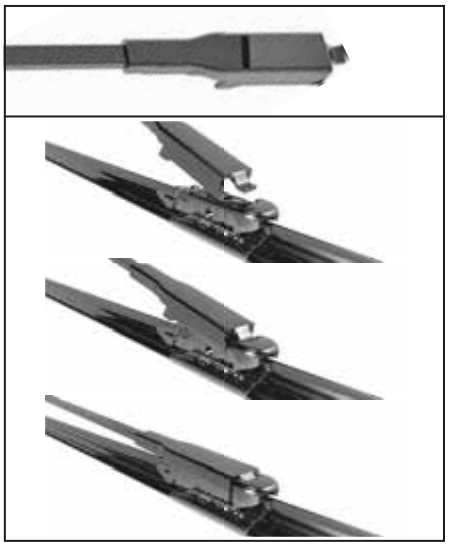

C CR1203

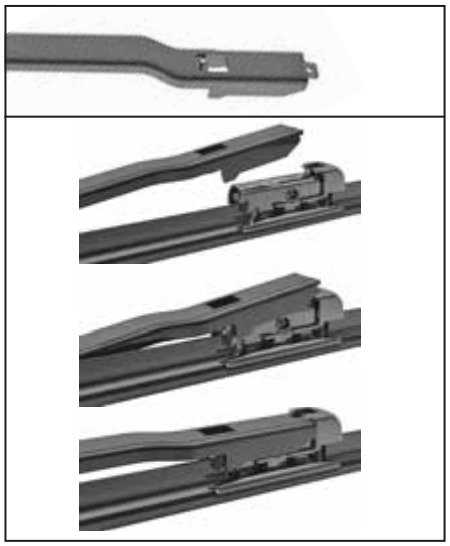

E CR1202

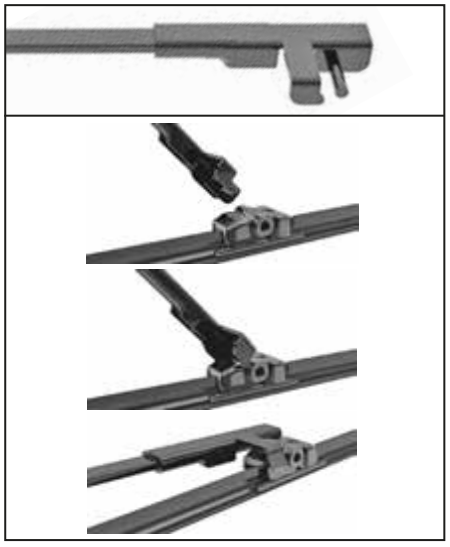

F CR1209

B CR1203

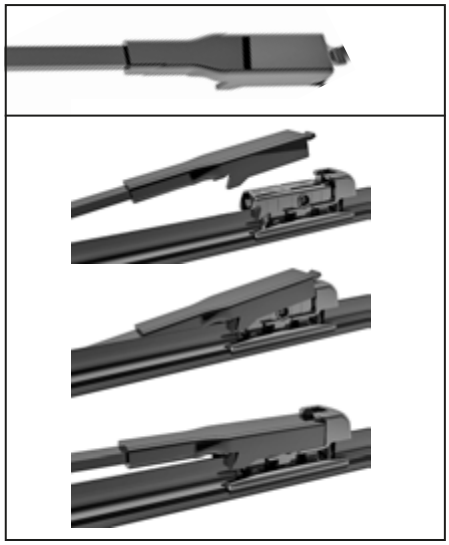

D CR1208

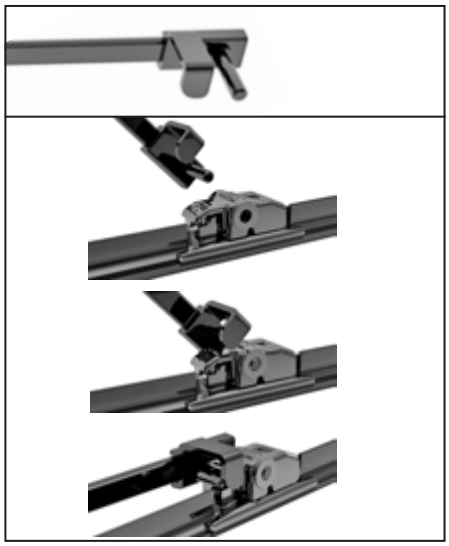

G CR1207

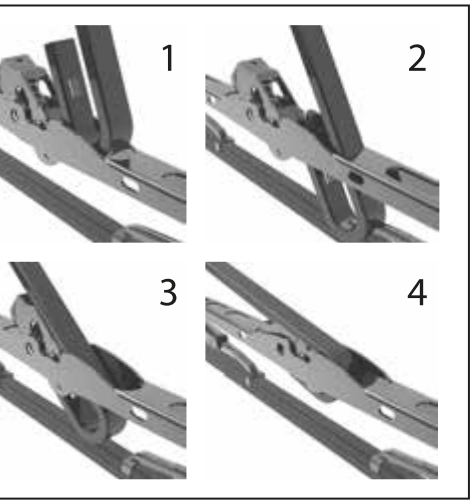
1
2
3
4

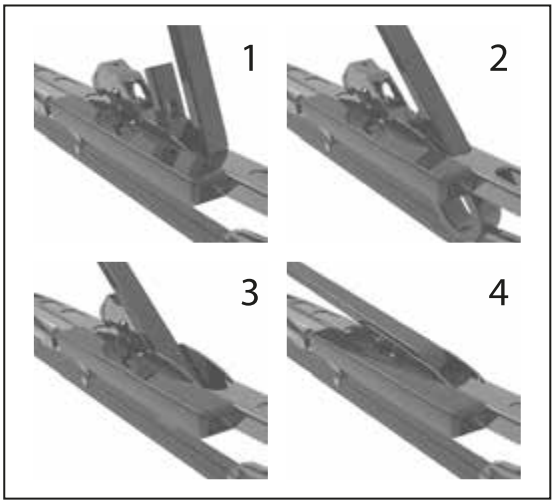
1
2
3
4

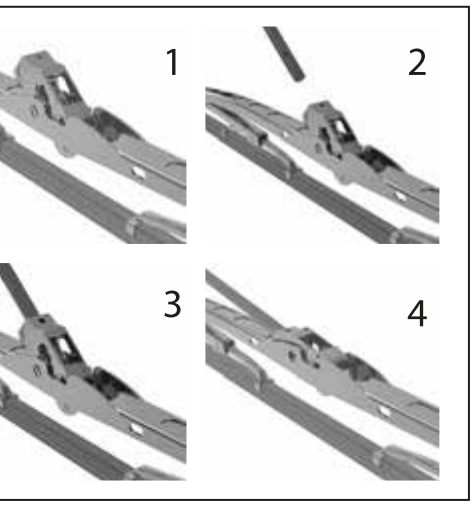
1
2
3
4

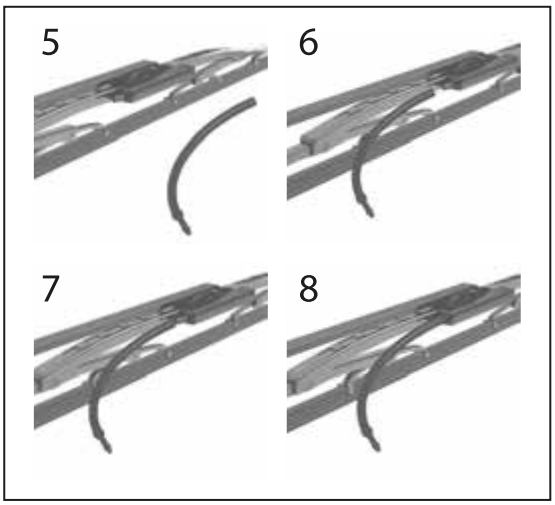
5
6
7
8

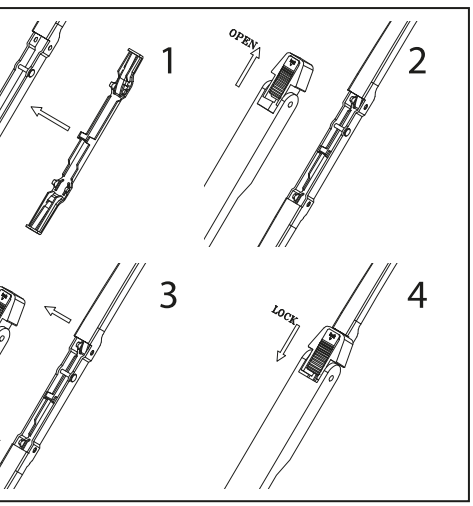
1
OPEN
2
3
LOCK
4

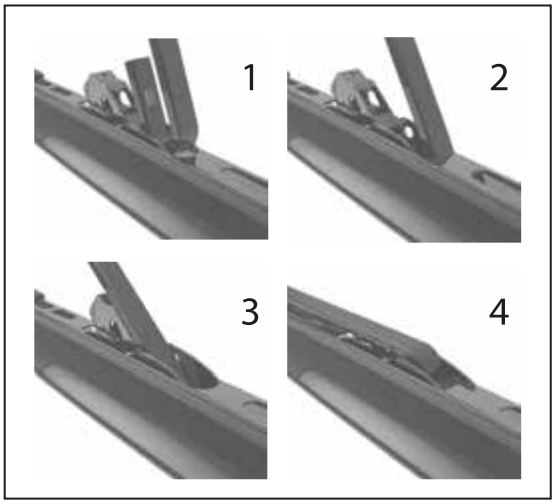
1
2
3
4

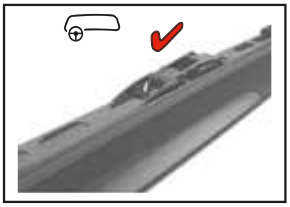

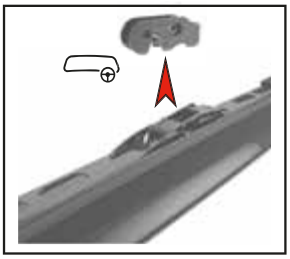

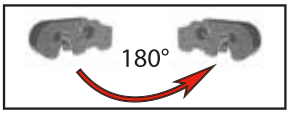
180°

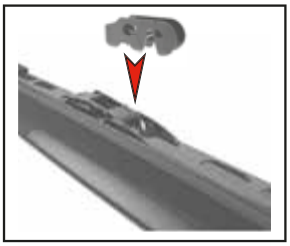

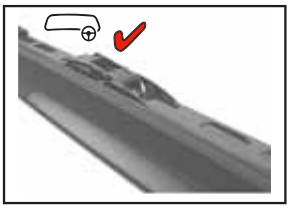

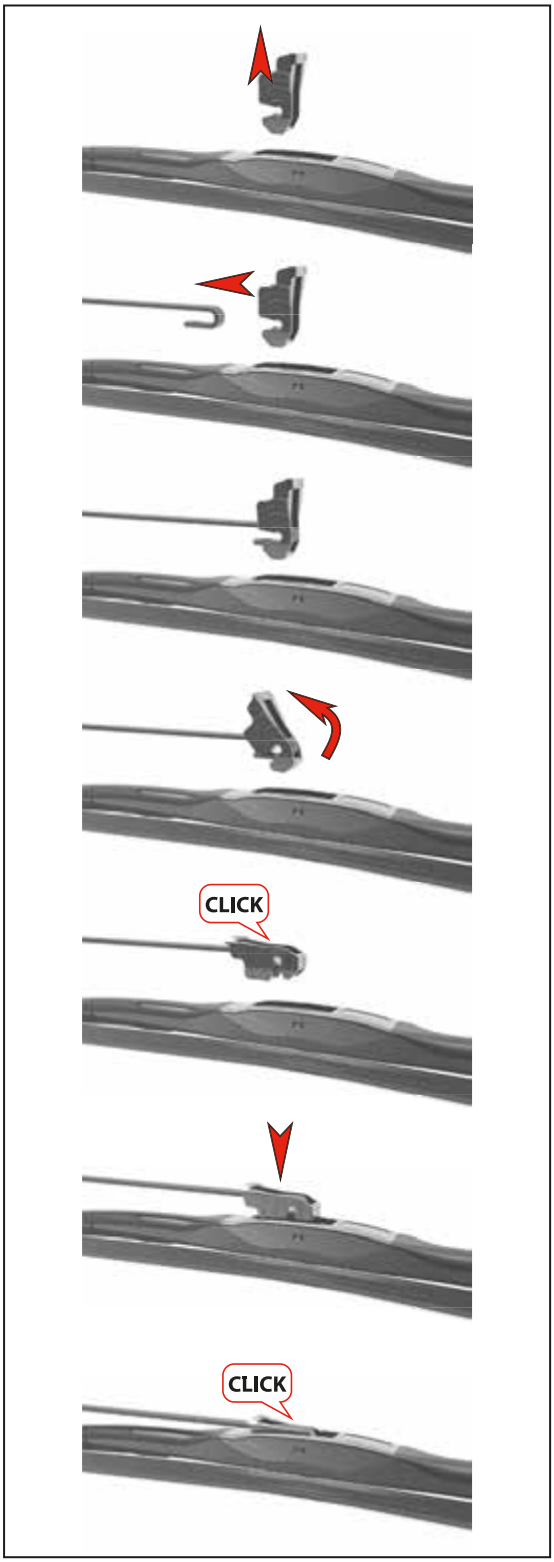
CLICK
CLICK

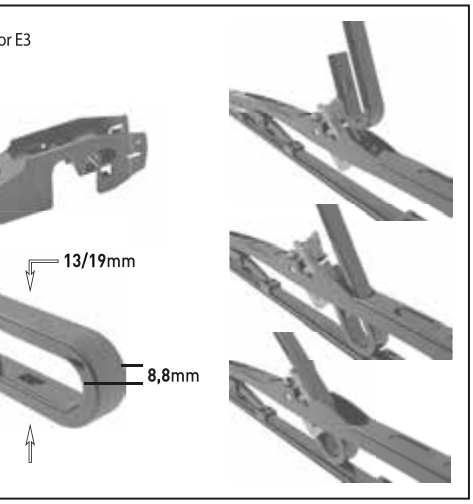
Connector E3
13/19mm
8,8mm

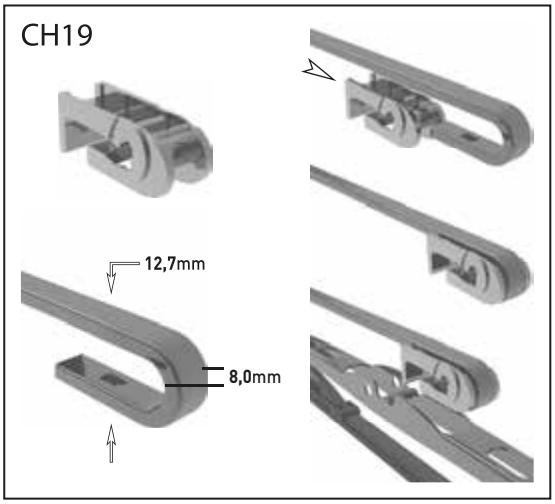
CH19
12,7mm
8,0mm

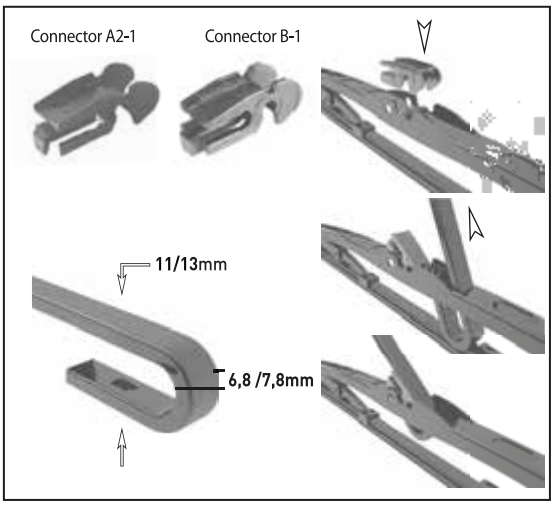
Connector A2-1
Connector B-1
11/13mm
6,8 /7,8mm

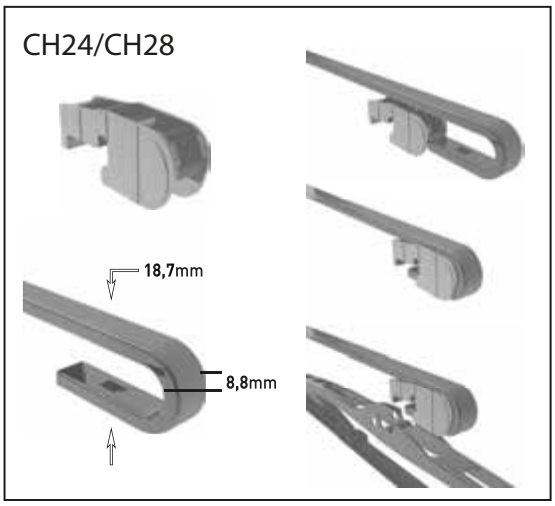
CH24/CH28
18,7mm
8,8mm

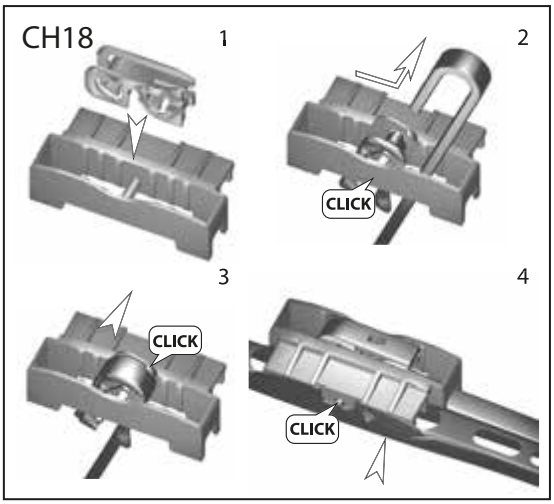
CH18
1
2
CLICK
3
CLICK
4
CLICK

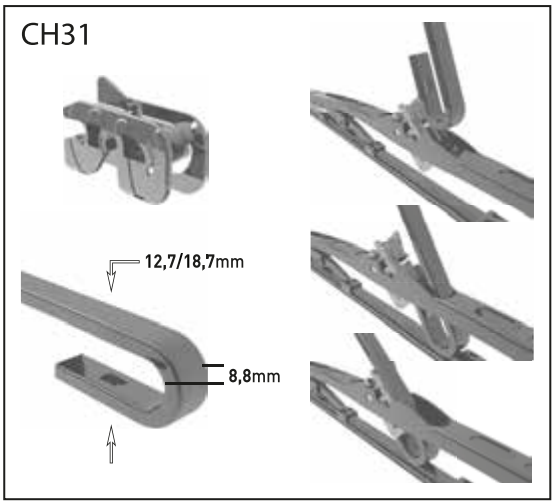
CH31
12,7/18,7mm
8,8mm

CH16

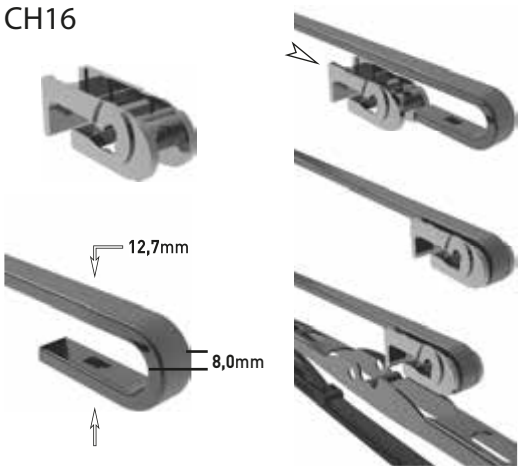

CH31+AK1

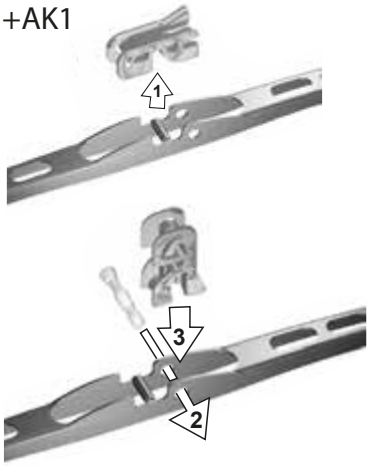

CH16+BD5

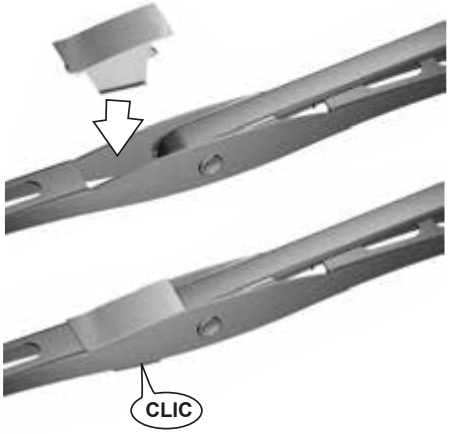

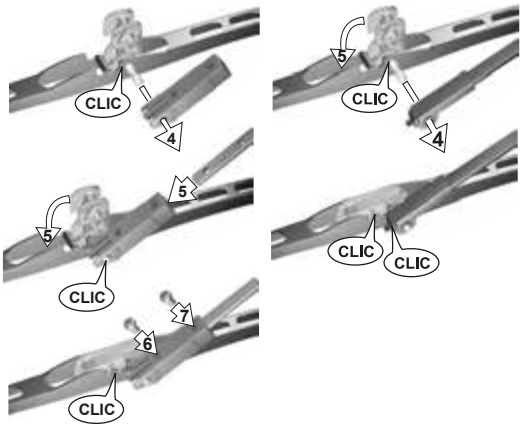

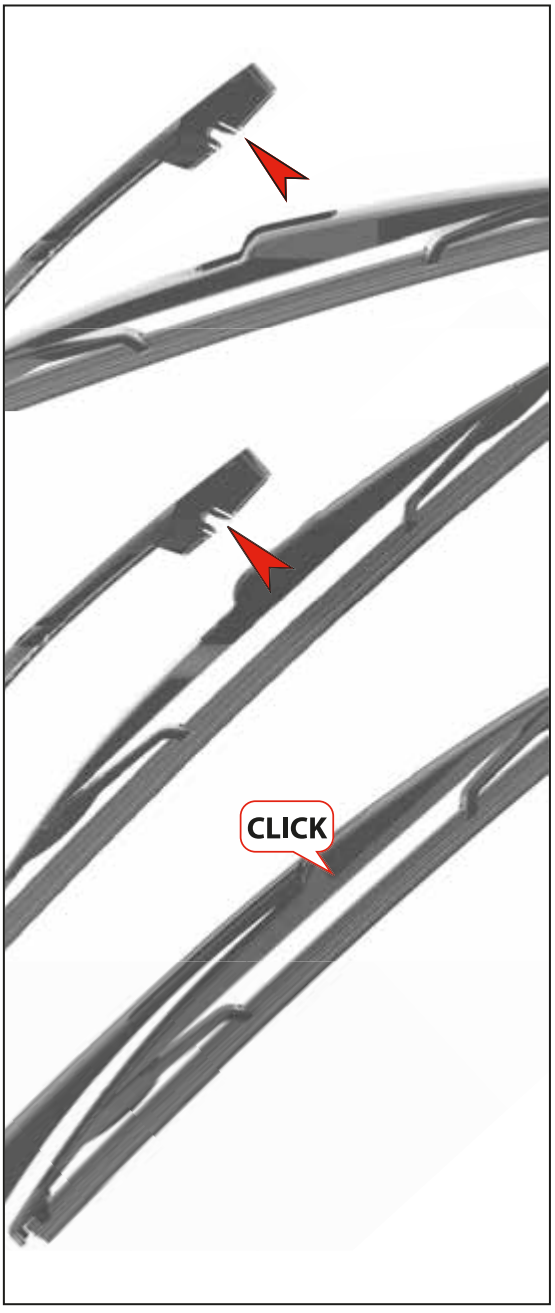
CLICK

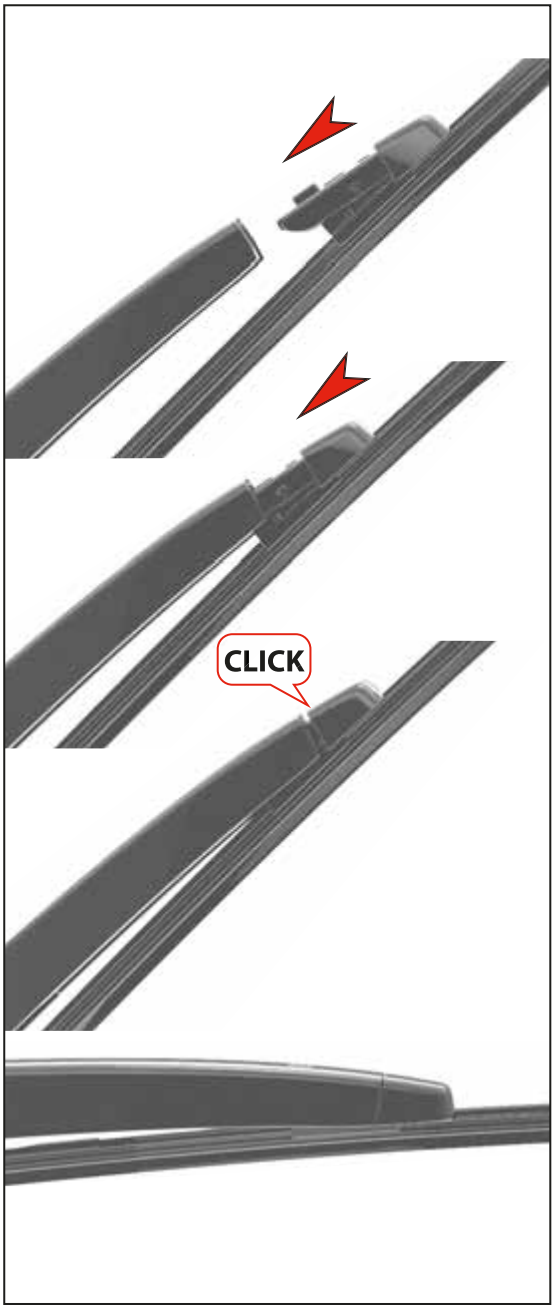
CLICK

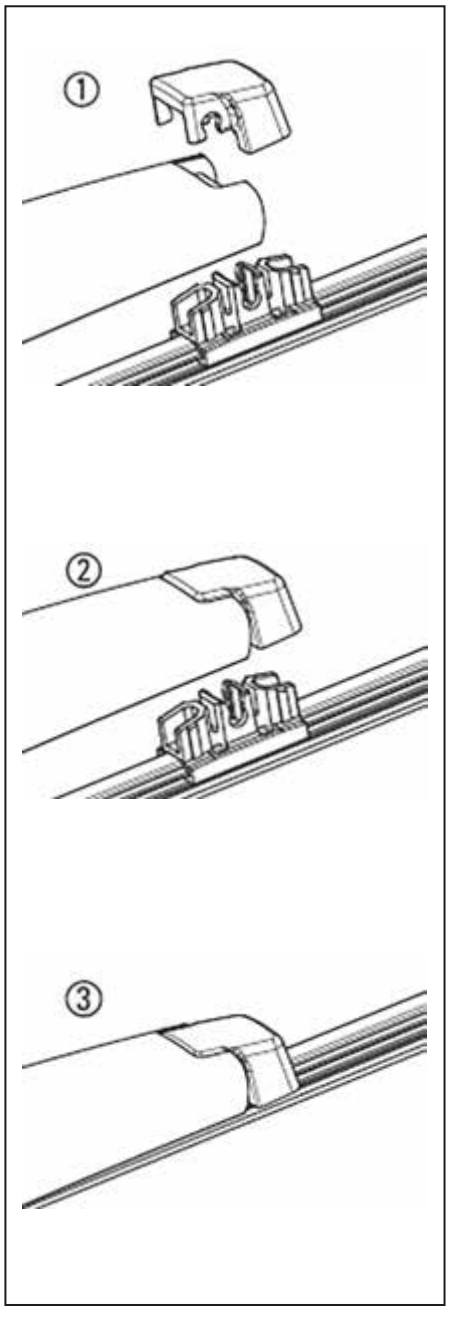
1
2
3

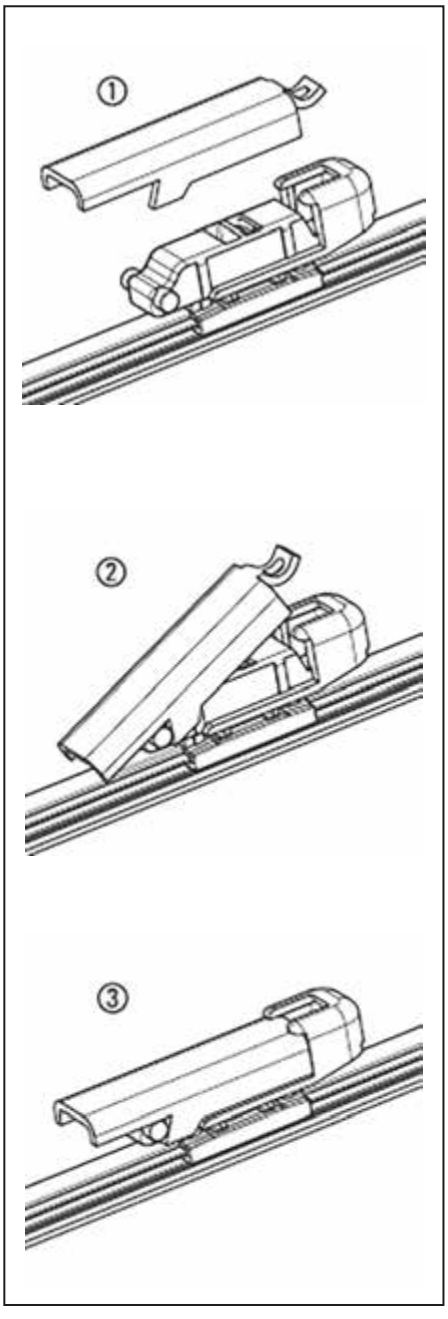
1
2
3

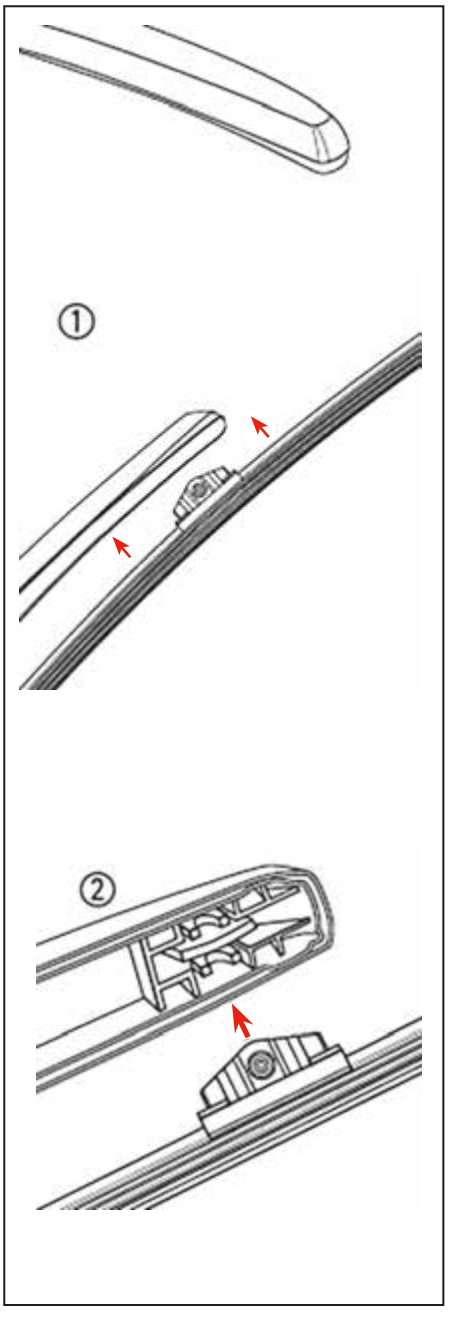
1
2

Notes

FEDERAL-MOGUL MOTORPARTS

Federal-Mogul Global Aftermarket EMEA bvba
Prins Boudewijnlaan 5 • 2550 Kontich • Belgium
Central Distribution Centre
Schoondonkweg 17 • 2830 Willebroek • Belgium
Phone +32 (0) 3450 83 10 • Fax +32 (0) 3450 83 38

Federal-Mogul Italy Srl • Aftermarket Division
Via Enrico Fermi 8 • 37135 Verona • Italy
Phone +39 045 828 13 11 • Fax +39 045 828 14 00

Federal-Mogul Aftermarket GmbH
Albert-Ruprecht-Strasse 2 • 71636 Ludwigsburg • Germany
Phone +49 (0) 7141-64865-8230 • Fax +49 (0) 7141-64865-8390

Federal-Mogul Aftermarket UK Limited
Greyhound Drive • Bradford • BD7 1NQ • U.K.
Phone +44 (0) 800 970 0203 • Fax +44 (0) 1274 848282

Federal-Mogul Aftermarket España S.A.
Calle Alcarria, nº 2 • 28823 Coslada • Madrid • Spain
Phone + 34 91 746 1900 • Fax + 34 91 746 18 90

Federal-Mogul Aftermarket France SAS
60-62, rue Danjou • 92517 Boulogne-Billancourt Cedex • France
Phone +33 (0) 1 46 94 27 00 • Fax +33 (0) 1 46 94 27 01
Service Commande de stock :
Phone +33 (0) 810 000 029 • Fax +32 (0) 34 50 80 26
Service Commande express :
Phone +33 (0) 810 000 029 • Fax +32 (0) 34 50 80 26

Federal-Mogul Motorparts Serbia*
Spanskih Boraca 22 • 11070 Novi Beograd • Serbia
Phone +381 11 31 31 918 • Fax +381 11 31 31 848

Federal-Mogul Aftermarket Southern Africa (PTY) Ltd
33 Western Boulevard • 2092 City West Johannesburg • South Africa
Phone +27 (0) 11 630 3000 • Fax +27 (0) 11 630 3106

Federal Mogul Powertrain Otomotiv A.S. (Aftermarket Division)
Meclis-i Mebusan Cad. No: 53 Dereli İş Merkezi 34427 • Fındıklı / İstanbul • Türkiye
Phone +90 212 292 6313 • Fax +90 212 292 6260

Federal-Mogul VCS OOO
Smolnaya street 24D, 13th floor • 125445 Moscow • Russia
Phone +7 495 221 50 60 • Fax +7 495 221 50 64

Federal-Mogul Aftermarket Egypt Ltd.
3 El Yemen St., Giza • 12311 Egypt • P.O. Box: 391 Dokki • Egypt
Phone +202 333 85 725 • Fax +202 374 84 147

Federal-Mogul Motorparts Sharjah*
Sharjah Airport International Free Zone (Saif-Zone)
Building X3 • Phone 20, 21, 22 • P.O.Box. 120548 • Sharjah • UAE
Phone +971 6 557 8870 • Fax +971 6 557 8941

* Branch office of Federal-Mogul Global Aftermarket EMEA, bvba

AE · BERAL · BERU · CHAMPION · DURON · FERODO · FP DIESEL · GLYCO · GOETZE · JURID · MOOG · NECTO · Nüral · Payen · QUICK STEER · WAGNER

BERU® is a Registered Trademark of Borg Warner Ludwigsburg GmbH

© 2018 Federal-Mogul Global Aftermarket EMEA, BVBA. All trademarks shown are owned by Federal-Mogul LLC or one or more of its subsidiaries in one or more countries.

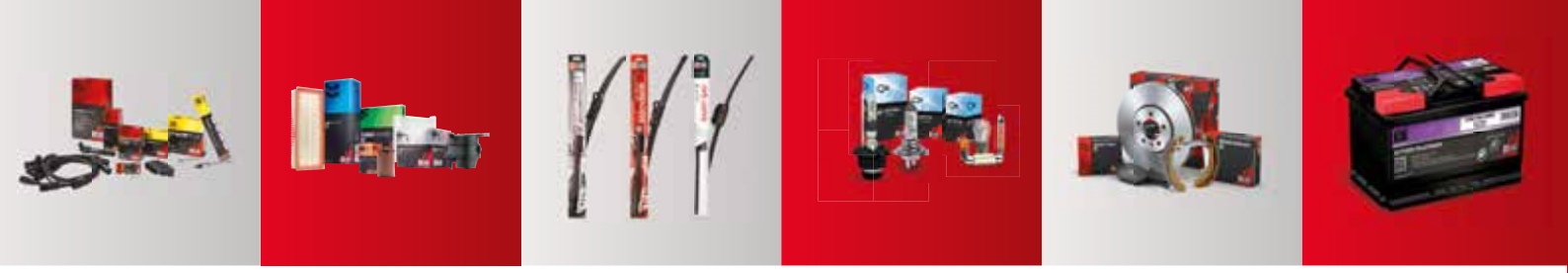

PARTS FOR PASSIONATE PEOPLE

IGNITION

- Spark Plugs
- Ignition Coils
- Wire Sets
- Glow Plugs
- Glow Control Units

FILTERS

- Diesel Filters
- Petrol Filters
- Oil Filters
- Cabin Filters
- Air Filters

BRAKES

- Brake Pads
- Brake Discs
- Brake Shoe Kits
- Wear Indicators

WIPERS

- Aerovantage
- Easyvision
- Rainy Day

LIGHTING

- Xenon
- Halogen
- Miniature

BATTERIES

- AGM batteries
- EFB batteries
- SLI batteries

Your Champion specialist

Learn more about quality products and latest technologies on **www.championautoparts.eu**

Designed by elcome

FEDERAL-MOGUL MOTORPARTS

Federal Mogul Global Aftermarket EMEA bvba
Prins Boudewijnlaan 5
2550 Kontich - Belgium
info@fmmotorparts.eu

4 060426 174507 CATCM1805

CHAMPION®

Champion® is a registered trademark of Federal-Mogul LLC or one or more of its subsidiaries in one or more countries. - CATCM1805 - EN