EUHOMY

Ice Maker

Instruction Manual

SKU: IM-01

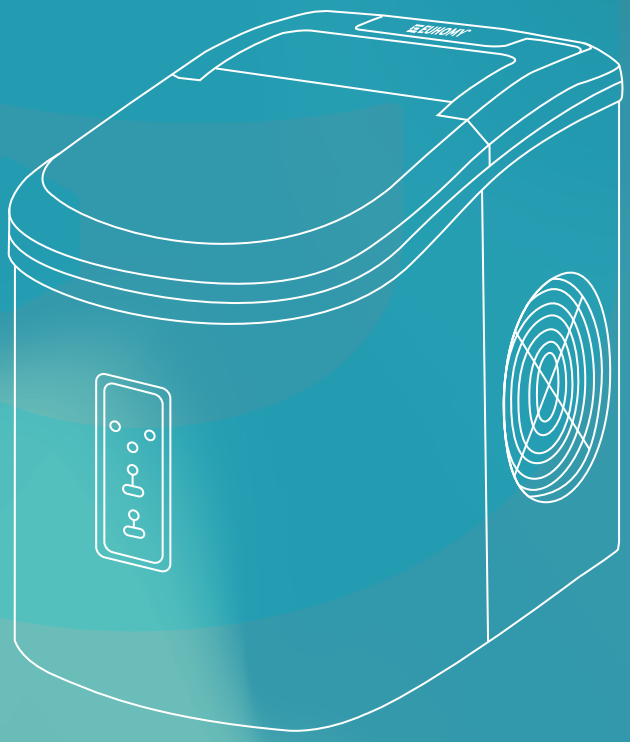

Email: support@euhomy.com

Facebook: @Euhomy.Official

Congratulations

Dear Customer:

Welcome to the Euhomy family. Thank you for purchasing one of our products.

Our goal is to provide you with superior service. If there is anything missing from or wrong with your order, or if you have any questions about using our ice maker, PLEASE contact us.

Email: support@euhomy.com
Facebook: @Euhomy.Official

The Euhomy team is available 24/7 to address your questions, comments, and concerns. Your satisfaction is our ultimate goal. We want to make everything right so you'll share your positive experience with other shoppers on Amazon.

If you experience any problems, please send an email to support@euhomy.com.

Our mission:
* To be the most trusted appliance brand.
* To create practical, compact appliances that better your life.

Be sure to register at

www.euhomy.com/register

for updates, warranty, and other relevant information.

Contents

Safety precautions	02-04
Operation & Installation	05-08
Maintenance & Tips	09
Warranty	10
Troubleshooting-support@euhomy.com	11

Safety Precautions

SAVE THESE INSTRUCTIONS / For Household Use Only

When using electrical appliances, basic safety precautions should always be followed:

- Do not use this appliance near water.
- Clean only with a damp cloth.
- Do not block any ventilation openings. Install in accordance with the manufacturer's instructions.
- Do not install near any heat sources, such as radiators, heat registers, stoves, or other apparatus (including amplifiers) that produce heat.
- Refrain from defeating the safety purpose of the polarized or grounding-type plug. A polarized plug has two blades, one wider than the other. A grounding-type plug has two blades and a third grounding prong. The wide blade or the third prong are provided for your safety. If the provided plug does not fit into your outlet, consult an electrician to replace the obsolete outlet.
- Protect the power cord from being walked on or pinched, particularly at plugs, convenience receptacles, and the point where they exit from the appliance.
- Do not attempt to modify or extend the power cord of this appliance.
- Unplug this appliance during lightning storms or when it will not be used for long periods of time.
- Unplug this appliance before cleaning it.
- Make sure that the available AC power matches the voltage requirements of this appliance.
- Do not handle the plug with wet hands. This could result in an electric shock.
- Unplug the power cord by holding the plug, never by pulling the line.
- Do not turn the appliance on or off by plugging or unplugging the power cord.
- Please turn off the appliance before unplugging it.
- Refer all servicing to qualified service personnel. Servicing is required when the appliance has been damaged in any way, such as the power-supply cord or plug being damaged, liquid having been spilled, or objects having fallen into the appliance. Or the appliance has been exposed to rain or moisture, does not operate normally, or has been dropped.
- To reduce the risk of fire or electric shock, do not expose this appliance to rain, moisture, dripping, or splashing, and no objects filled with liquids should be placed on top of it.
- This appliance is not intended for use by persons (including children) with reduced physical, sensory or mental capabilities, or lack of experience and knowledge unless they have been given supervision or instruction concerning the use of the appliance by a person responsible for their safety.
- Do not use your ice maker outdoors. Place the ice maker away from direct sunlight, and make sure that there are at least four inches of space between the back of your unit and the wall. Keep a minimum distance of four inches on each side of your team free.
- Do not use liquids other than water to make ice cubes.
- Do not clean your ice maker with flammable fluids. The fumes can create a fire hazard or explosion.
- Do not tip over.

Safety Precautions

⚠ Note:

- Fill with potable water only. Only use drinking water.
  Please do not touch the evaporator when the ice maker is making ice. It may burn your skin.
  This appliance must be earthed.

Risk Of Fire or Explosion- Flammable Refrigerant Used

- Do Not Use Mechanical Devices To Defrost the Ice Maker. Do Not Puncture Refrigerant Tubing.
- To Be Repaired Only By Trained Service Personnel. Do Not Puncture Refrigerant Tubing.
- Consult the Repair Manual/Owner's GuideBefore Attempting To Install or Service This Product.All Safety Precautions Must be Followed.
- Dispose Of Property In Accordance With Federal Or Local Regulations.
- Follow Handling Instructions Carefully.
- The ice maker should be installed in accordance with the safety standard for Refrigeration Systems, ASHRAE15. The ice maker shall not be installed in corridors or hallways of public buildings.
- If the unit is with the problem, it needs to be maintained and replaced with like components and that servicing shall be done by factory-authorized service personnel, so as to minimize the risk of possible ignition due to faulty parts or improper service.

This appliance must be plugged into at least a 15 A,110 - 115 V,60 Hz GROUNDED OUTLET. This appliance must be grounded. It is equipped with a 3-wire cord grounding plug. The plug must be plugged into an outlet that is properly installed and grounded.

Electric Shock Hazard

Failure to follow these instructions can result in electric shock, fire, or death.

- Keep ventilation openings in the ice maker clear of obstruction.
- Do not damage the refrigerant tubing when handling, moving, or using the ice maker.
- Never allow children to play with or operate the ice maker.
- Unplug the ice maker before carrying out user maintenance on it.

Safety Precautions

- If a component part is damaged, it must be replaced by the manufacturer, its service agent, or similarly qualified persons in order to avoid a hazard.
- Follow local regulations regarding disposal of the ice maker due to flammable refrigerant and gas.
- All refrigeration products contain refrigerants, which under the guidelines of federal law, must be removed before disposal. It is the consumer's responsibility to comply with federal and local regulations when disposing of this product.
- This ice maker is intended to be used in households and similar environments.
  We do not recommend the use of an extension cord with this appliance. If you must use an extension cord, use one with a minimum of 14 AWG wiring and rated at no less than 1875 Watts.
- Please avoid the use of an extension cord because it may overheat and cause a risk of fire.
  However, if it is necessary to use an extension cord:
  Use only 3-wire extension cords with a 3-blade grounding plug.
- The marked rating of an extension cord must be equal to or greater than the rating of this appliance.
- It should be positioned such that it does not drape over the counter or tabletop where it can be pulled on by children.

Operation & Installation

ASSEMBLY AND PARTS

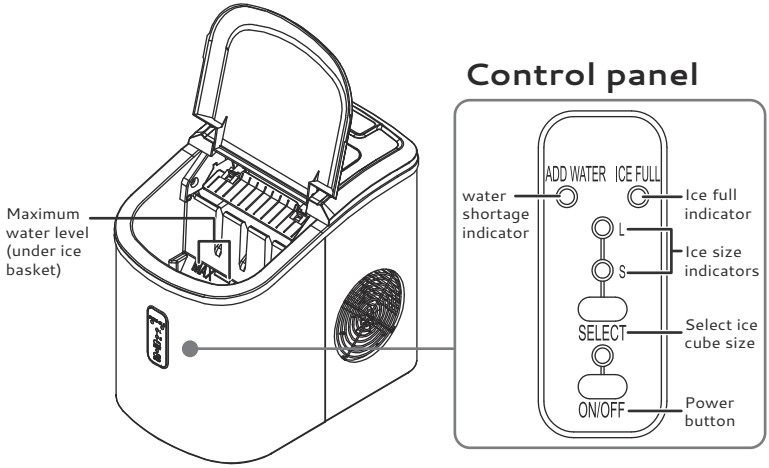

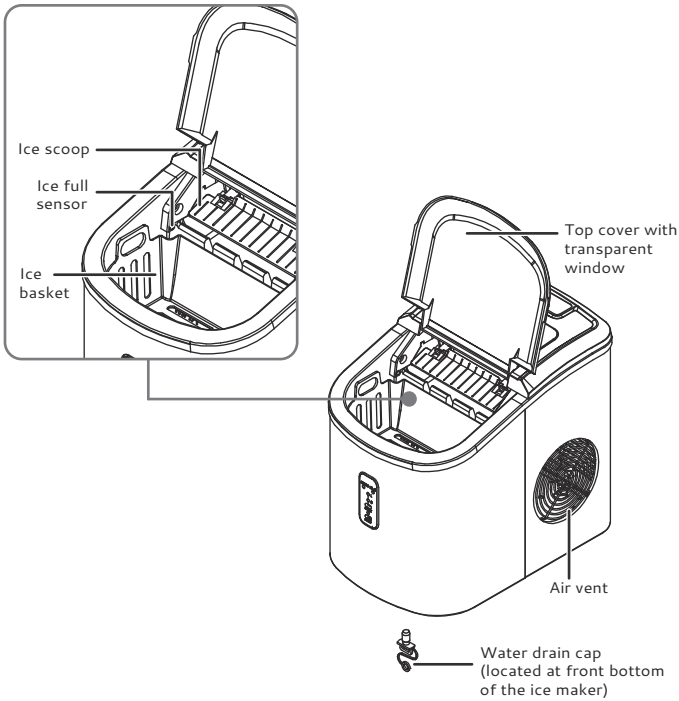

Operation & Installation

BEFORE FIRST USE

- This portable ice maker uses a fully automatic control system with an advanced microcomputer for easy and convenient ice-making. Simply add water, plug into an outlet, and press the Power button. You can select one of two ice-cube sizes with the touch of a button.
- The ice maker will stay idle for 3 minutes when you first use it or in ice-making cycles. We suggest you discard the ice cubes made in the first four cycles to ensure that the machine is clean. Warning indicators will alert you to add water when the tank is empty and to remove ice when the storage basket is full. The ice maker also has built-in safeguards that shut down the system automatically when needed to limit accidental damage.

⚠ Note:

- The incline of the ice-maker cabinet should not exceed 45 degrees during transportation or use. Do not turn the ice maker upside down; doing so could cause the compressor or refrigerating system to operate incorrectly. When the ice maker is moved or transported, please allow time for the fluids in the compressor to settle. Before using the ice maker for the first time, please wait 2 hours after the unit has been leveled and positioned in its proper place.
- Please ensure the ice maker is level and on a stable table or other flat, horizontal surface to prevent malfunction.
- The machine must be placed on a dry and level surface with sufficient ventilation, far from heat sources, such as ovens and heaters, and from corrosive gases. Leave a clearance of 8 in. (20 cm) on all sides of the ice maker for proper ventilation. Room temperature should be between 50°F and 100°F.
- Do not fill the water tank with hot water. This my damage the ice maker. Use only lukewarm or cold water.

PREPARING YOUR ICE MAKER

- Remove the exterior and interior packaging.
- Make sure that the ice basket and ice scoop are inside. If any parts are missing, please contact our customer service.
- Remove the tape holding the ice scoop and ice basket.
- Clean the tank and ice basket with warm, soapy water and a soft cloth.
- Allow 1 hour for the refrigerant fluid to settle. Then plug the ice maker into a grounded wall outlet.

USE YOUR ICE MAKER

- Wipe out the interior of your ice maker with a clean, damp cloth before each use.Before using your ice maker each time, wipe out the interior with a clean, damp cloth.
- When the machine is operating, please ensure the drain plug is closed and the water is enough.Plug the ice maker into a wall outlet and the green power indicator light.
- Open the cover and remove the ice basket.
- Fill the water tank. NOTE: Do not add water above the Max Water Level mark at the back of the tank.
- Replace the ice basket and close the cover.
- Press the Power button. The green light should illuminate, signifying that the unit is on.
- To choose small or large ice cubes, press the Select button until the desired ice size is indicated.

Operation & Installation

⚠ If the room temperature is below 60 °F (15.6°C), select the Small ice cube size to prevent the ice cubes from sticking together.
Press and hold the Select button for 5 seconds to run 8 continuous cycles, even when the Ice Full indicator is on.

- The ice-making cycle will last about 8 to 13 minutes, depending on the ice size you select. The ice-making cycle starts with water flowing into the water tray below the evaporator fingers. Over the next 8 to 13 minutes, ice forms on the evaporator fingers. Once this happens, the ice tray will tilt back and any water remaining in the ice tray will drain into the water tank. Next, the ice cubes drop from the evaporator fingers. Then, the ice shovel pushes the cubes forward into the ice basket. The ice tray will automatically move back into position under the evaporator fingers and start the next cycle.

- When the ice basket is full, the Ice Full indicator will light up and the ice maker will automatically stop the ice-making cycle. Gently remove the ice from the ice basket with the ice scoop. Once the ice basket has been emptied and the cover is closed, the ice maker will restart its ice-making function automatically.

- When the water tank is empty, the Add Water indicator will light up and the ice-making cycle will stop automatically. The Power button will flash every 5 seconds. Press the Power button once, remove the ice basket, and add water to the water tank.

⚠ **Do not fill the water tank above the Max Water Level mark at the back of the tank. Wait 3 minutes. Then press the Power button to restart the ice-making function.**

- When you have finished making ice, transfer the ice to a freezer.
- When you have finished making ice, transfer the ice to a freezer. The ice will last in the ice maker for up to 18 hours, depending on the ambient temperature.
- Stop the ice-making cycle by pressing the Power button. Unplug the unit from the wall outlet. Open the cover and allow the ice maker to reach room temperature. Follow the directions in the Care and Cleaning section.
- Direct or reflected sunlight may cause the infrared sensor to malfunction. If the unit does not stop making ice cubes even when the ice basket is full, move the ice maker to a darker location.
- You must change the water in the tank at least every 24 hours to keep the unit hygienic and prevent bad-smelling ice.

Maintenance & Tips

MAINTENANCE

- Your ice maker is designed for year-round use and needs minimal cleaning and maintenance. When you first receive the unit, wipe the outside will warm, soapy water. Wipe again with a clean, wet cloth. Then wipe the unit dry with a soft, dry cloth. Do this periodically to keep your ice maker looking new.

⚠ Note:

To prevent damage to the finish, do not use the following:

- Gasoline, benzine, thinner, or other solvents.
- Abrasive cleaners.

TIPS & SUGGESTIONS

- Stop the ice-making cycle by pressing the Power button. The green power indicator will go out, indicating the ice maker is off. Unplug the ice maker from the wall outlet and allow the unit to warm up to room temperature.
- If the water tray is not in the vertical position behind the evaporator fingers, gently push the water tray back so that all water drains into the water tank.
- Open the drain plug to drain out excess water.
- Remove the ice basket.
- Remove the water tube screen and rinse it under running water.
- Clean the interior of the ice maker with a soft cloth dampened in a weak solution of warm water and white vinegar. Rinse by wiping with a clean, damp cloth.
- Replace the drain plug and the water tube screen. Wash the ice basket and ice scoop in warm, soapy water. Rinse and dry.
- Clean the exterior of the ice maker with a soft, damp cloth. If needed, use a solution of mild dishwashing liquid and water.
- Do not clean the evaporator fingers.
- Locate your ice maker in the coolest area of the room, away from heat-producing appliances and heating ducts, and out of direct or reflected sunlight.
- Make sure that the appliance is sufficiently ventilated, with adequate air circulation behind it.

Warranty

Euhomy offers a limited 1-year warranty ("warranty period") on all of our products purchased new and unused from Euhomy company, with original proof of purchase and where a defect has arisen, wholly or substantially, as a result of faulty manufacture, parts or workmanship during the warranty period. The warranty does not apply where damage is caused by other factors, including without limitation:
(a) normal wear and tear;
(b) abuse, mishandling, accident, or failure to follow operating instructions;
(c) exposure to liquid or infiltration of foreign particles;
(d) servicing or modifications of the product other than by Euhomy;
(e) commercial or non-household use.

The Euhomy's warranty covers all costs related to restoring the proven defective product through repair or replacement of any defective part and necessary labor so that it conforms to its original specifications. A replacement product may be provided instead of repairing a defective product. Euhomy's exclusive obligation under this warranty is limited to such repair or replacement. A receipt indicating the purchase date is required for any claim, so please keep all receipts safe. Although greatly appreciated, the product registration is not required to activate any warranty and product registration does not eliminate the need for the original proof of purchase.The warranty becomes void if attempts at repair are made by non-authorized third parties and/or if spare parts, other than those provided by Euhomy, are used.

You may also arrange for service after the warranty expires at an additional cost. These are our general terms for warranty service, but we always urge our customers to reach out to us with any issue, regardless of warranty terms. If you have an issue with a Euhomy product, please contact us (support@euhomy.com), and we will do our best to resolve it for you.

Troubleshooting-support@euhomy.com

PROBLEM	POSSIBLE CAUSES	SOLUTION
The Add Water indicator light is on.	• Low or no water in the tank.	• Add water and the ice maker will operate normally again.
No indicators are lit on the control panel.	• Plug is disconnected.	• Check that the plug is plugged into the electrical outlet.
The ice cubes stick together.	• The water temperature is too cold.	• Replace the water with warmer water.
	• The ice-making cycle is too long.	• Stop the ice maker. Wait for the ice to melt. Select Small Ice and restart the ice maker.
The Ice Full and Add Water indicators light up simultaneously.	• Electrical power surge. • Air or blockage in lines. Water tank cannot detect water level.	• Turn off and unplug the ice maker. Add water if needed. Plug in and restart the unit. • Inspect the related parts. Remove the drain cap on the back of the unit. Drain out a small amount of water. Replace the cap and restart the unit. • See if ice is blocking the ice pusher. Turn off the ice maker. Let the ice melt. Then restart the unit.
The Ice Full indicator light is on.	• The ice basket is full.	• Remove ice from the ice storage basket to make more.
The unit does not operate	• Power is not being supplied to the unit. The ambient temperature or the water temperature is too high.	• Plug the unit into a standard 110/120 V, 60 Hz power source. Be sure to operate the unit in a room temperature of less than 90 x F and / or pour colder water into the water reservoir.
No ice is being made.	• Making ice takes too long.	• Turn off the unit. Let the ice block melt. Then, restart the unit. You can also switch to small ice cubes.
The ice-making cycle seems normal, but no ice is made.	• Refrigerant is leaking. A pipe in the cooling system is blocked.	• Consult a qualified technician or call customer service.
	• The room temperature or water temperature is too high.	• The room temperature should be 50°F to 105°F (10°C to 40.6°C). The water tempera-ture should be 40°F to 90°F (4.44 °C to 32.2°C).
The ice maker won't stop making ice.	• Direct or reflected sunlight can cause the sensor to malfunction.	• Move the ice maker to a darker location.