COLD

INSTRUCTION MANUAL

NMB47BG
NMB115BG

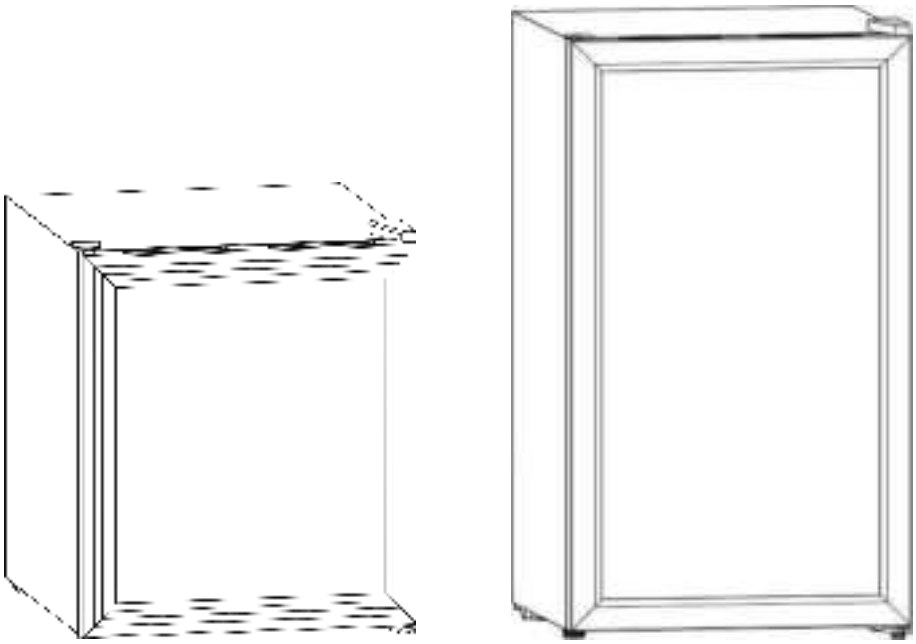

BEFORE USE, PLEASE READ AND FOLLOW ALL SAFETY RULES AND OPERATING INSTRUCTION.

https://manual-lab.com/

IMPORTANT SAFETY INSTRUCTIONS

⚡WARNING⚡	To reduce the risk of fire, electrical shock, or injury when using your appliance, follow these basic precautions:

·Before using the appliance, please read this user manual to ensure that you gain the maximum benefit from it.

WARNING:

1) This appliance is not intended for use by persons (including children) with reduced physical, sensory or mental capabilities, or lack of experience and knowledge, unless they have been given supervision or instruction concerning use of the appliance by a person responsible for their safety.
2) Children should be supervised to ensure that they do not play with the appliance.
3) This appliance can be used by children aged from 8 years and above and persons with reduced physical, sensory or mental capabilities or lack of experience and knowledge if they have been given supervision or instruction concerning use of the appliance in a safe way and understand the hazards involved. Children shall not play with the appliance. Cleaning and user maintenance shall not be made by children without supervision.
4) If the supply cord is damaged, it must be replaced by the manufacturer, its service agent or similarly qualified persons in order to avoid a hazard.
5) To avoid a hazard due to instability of the appliance, it must be fixed in accordance with the instructions.
6) When positioning the appliance, ensure the supply cord is not trapped or damaged.
7) Do not locate multiple portable socket-outlets or portable power supplies at the rear of the appliance.
8) Keep ventilation openings, in the appliance enclosure or in the built-in structure, clear of obstruction.
9) Do not use mechanical devices or other means to accelerate the defrosting process, other than those recommended by the manufacturer.
10) Do not damage the refrigerant circuit.
11) Do not use electrical appliances inside the drink storage compartments of the appliance, unless they are of the type recommended by the manufacturer.
12) Do not store explosive substances such as aerosol cans with a flammable propellant in this appliance.
13) This appliance is intended to be used in household and similar applications such as
- staff kitchen areas in shops, offices and other working environments;
- farm houses and by clients in hotels, motels and other residential type environments;
- bed and breakfast type environments;
- catering and similar non-retail applications.
14) Children aged from 3 to 8 years are allowed to load and unload refrigerating appliances.
15) To avoid contamination of drink, please respect the following instructions:
- Opening the door for long periods can cause a significant increase of the temperature in thecompartments of the appliance.
- Clean regularly surfaces that can come in contact with drink and accessible drainage systems.
- Clean water tanks if they have not been used for 48 h; flush the water system connected to a water supply if water has not been drawn for 5 days.
- If the refrigerating appliance is left empty for long periods, switch off, defrost, clean, dry, and leave the door open to prevent mould developing within the appliance.

·Note: This appliance contains flammable refrigerant R600a and foaming agent cyclopentane.
Please avoid contact fire when you transport and use it.
Please ask professional for servicing when the machine broke down. Please send it to your local appointed disposal station when you discard it.

-Save these instructions-

https://manual-hub.com/

INSTALLATION INSTRUCTIONS

- This appliance is designed to be free standing only, and should not be recessed or built-in.
- Place your appliance on a floor that is strong enough to support the appliance when it is fully loaded. To level your appliance, adjust the leveling legs at the bottom of the appliance.
- Allow 10 cm of space between the top, the back and sides of the appliance, which allows the proper air circulation to cool the compressor and condenser.
- Locate the appliance away from direct sunlight and sources of heat (stove, heater, radiator, etc.). Direct sunlight may affect the acrylic coating and heat sources may increase electrical consumption. Extreme cold ambient temperatures may also cause the unit not to perform properly.
- Avoid locating the appliance in moist areas.
- Plug the unit into an exclusive, properly installed-grounded wall outlet. Do not under any circumstances cut or remove the third (ground) prong from the power cord. Any questions concerning power and/or grounding should be directed toward a certified electrician or an authorized Products service center.
- After plugging the appliance into a wall outlet, allow the appliance to cool down for 2-3 hours before placing any items in the compartment.

https://manual-lab.com/

PRODUCT INSTRUCTIONS

NMB47BG

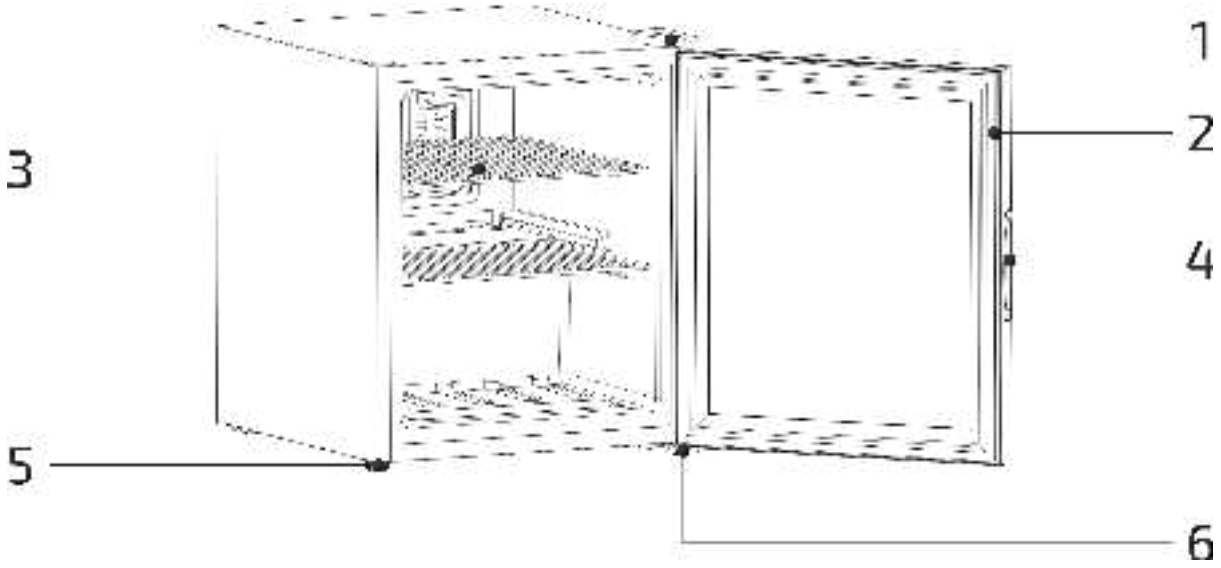

1: Upper Hinge
2: Door Gasket
3:Shelf
4: Door Handle
5: Adjust Foot
6: Bottom Hinge

NMB115BG

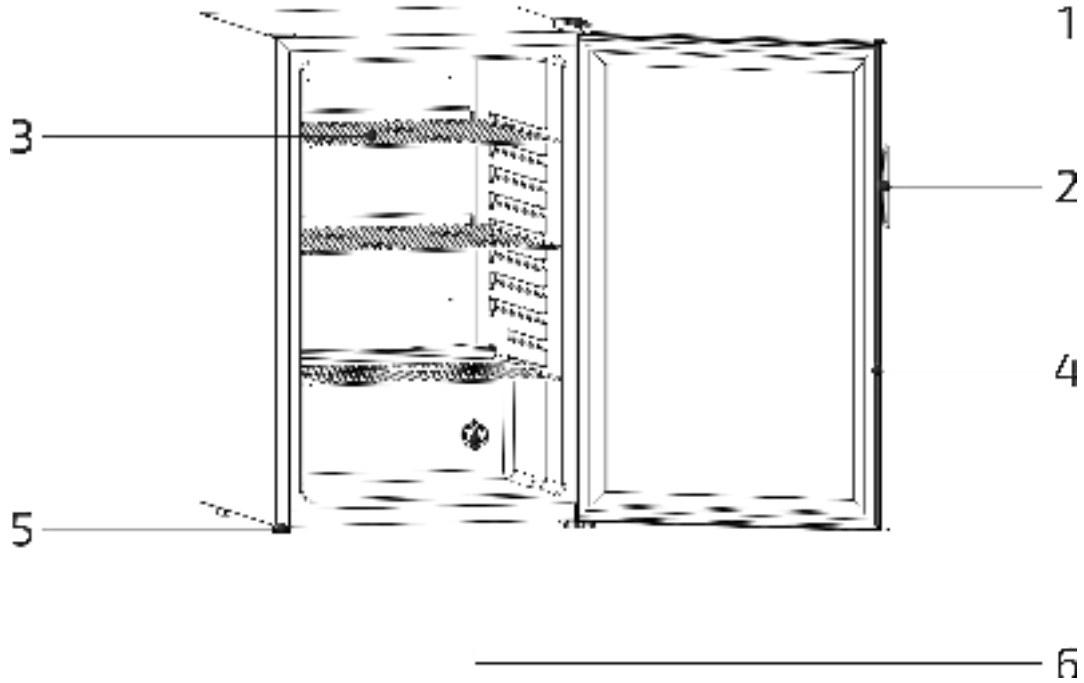

1: Upper Hinge
2: Door Handle
3: Shelf
4: Door Gasket
5: Adjust Foot
6: Temperature Control

https://manual-lab.com/

OPERATING YOUR UNIT

Setting the Temperature Control

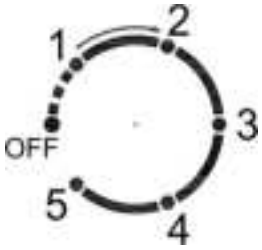

NMB47BG

NMB115BG

1) The temperature control knob is a device to adjust the temperature in the refrigerator. The gear on the knob does not represent the temperature value. At the same ambient temperature, the larger the gear, the lower the temperature in the box; the smaller the gear, the higher the temperature in the box. Users can adjust the temperature control knob according to their needs.
2) If the ambient temperature is high, it is not recommended to set the temperature control knob to "5", otherwise the compressor will continue to work.
3) Before the refrigerator is powered off, please set the gear to "0".
4) If the power supply of the refrigerator is cut off, it needs to wait for 5 minutes to restart. If the refrigerator is started before this time, the refrigerator may not be able to start.
5) When the temperature control knob is set to "0", the compressor will stop working, but the power supply of the refrigerator will not be cut off.

Tips

- It is intended to be used exclusively for the pantry.
- This refrigerating appliance is not suitable for the freezing foodstuffs.
- The pantry is recommended to be designed at 17°C.
- The shelves placed in factory mode is the most efficient use of energy for the refrigerating appliances.
- The following combination of shelves is recommended for energy to be used as efficiently as possible by the refrigeration unit.

THERE ARE ONE SHELVES IN NMB47BG

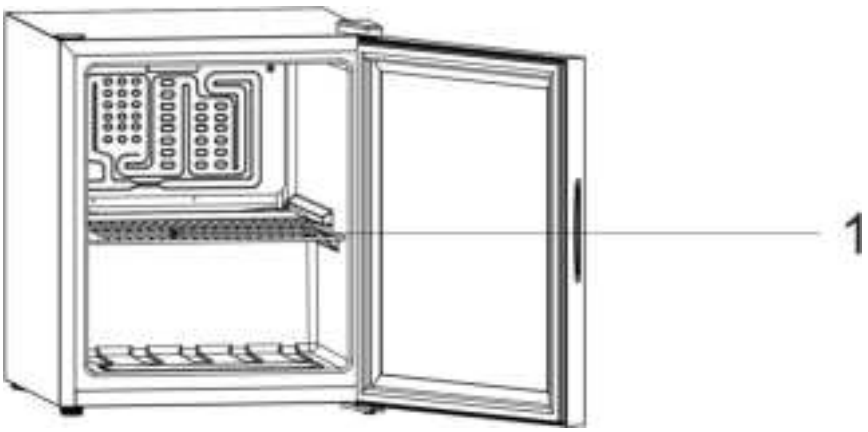

https://manual-lab.com/

THERE ARE THREE SHELVES IN NMB115BG

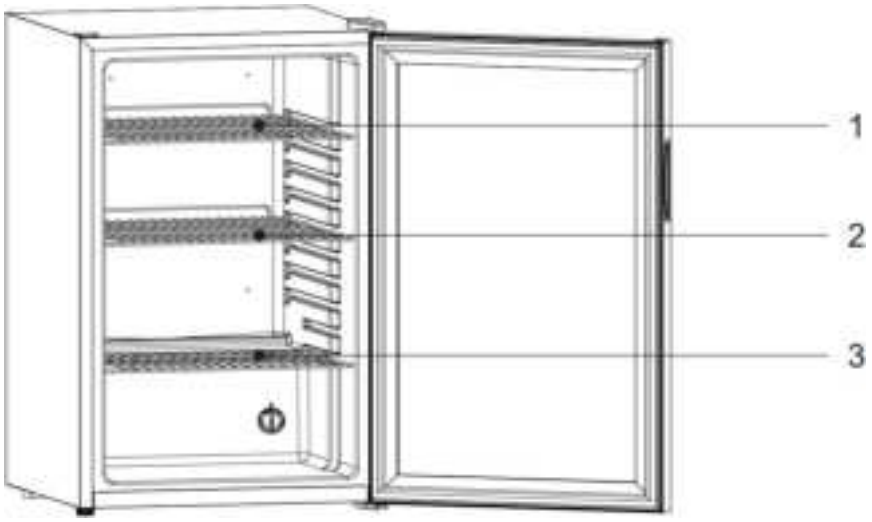

NMB47BG

- When the surrounding temperature is 25°C and the pantry has no load, it will take around 30 minutes to decrease the pantry 's temperature from 25°C to 17°C
- The pantry is recommended to be designed at 17°C. The energy consumption is 0.132kWh/24h. If the setting temperature is higher than 17°C, the energy consumption will be lower. If the setting temperature is lower than 17°C, the energy consumption will be higher.
- Light inside, turn on/off in the back of the cooler. Lights are then on all the time, until you turn it off

NMB115BG

- When the surrounding temperature is 25°C and the pantry has no load, it will take around 30 minutes to decrease the pantry 's temperature from 25°C to 17°C
- The pantry is recommended to be designed at 17°C. The energy consumption is 0.181kWh/24h. If the setting temperature is higher than 17°C, the energy consumption will be lower. If the setting temperature is lower than 17°C, the energy consumption will be higher.
- Light inside, turn on/off inside in front of the cooler. Lights are then on all the time, until you turn it off.

https://manual-lab.com/

GENERAL FAULT DESCRIPTION

If the product is not working properly, please check and handle according to the following methods. If the situation can not be changed, please contact the local after-sales service center in time, and be sure to provide the model name and product number in detail.

The refrigerator doesn't work

Is the power on?

Is the power supply voltage too low?

The light is not bright

The light switch was not pressed

Is the power on?

It's noisy

Whether the ground is flat and whether the product is placed stably

Is the product in contact with external objects or walls

The internal temperature is not low

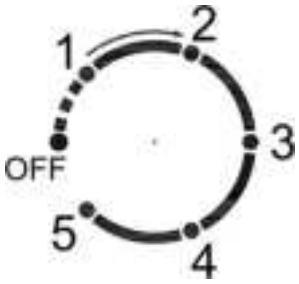

Improper setting temperature, please select the appropriate temperature

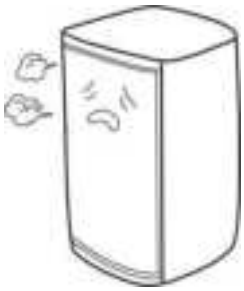

The door is not closed tightly or opened frequently, and the opening time is too long

Is the location exposed to direct sunlight or too close to the furnace and other heat sources

Poor heat dissipation, please check whether there is enough cooling space around the product

https://manual-lab.com/

Correct disposal of this product	
	This symbol on the product, or in its packaging, indicates that this product may not be treated as household waste. Instead, it should be taken to the appropriate waste collection point for the recycling of electrical and electronic equipment. By ensuring this product is disposed of correctly, you will help prevent potential negative consequences for the environment and human health, which could otherwise be caused by the inappropriate waste handling of this product. For more detailed information about the recycling of this product, please contact your local council, your household waste disposal service, or the shop where you purchased the product.

SERVICE

- Access to professional repair: https://service.temptech.no/
- Ordering spare parts: Please send emails to Service@temptech.no
- How to find the model information in the product database: Please visit our website https://temptech.no/ to find the instruction about how to find production information in EU database.

We take reservations about typing faults and if any problems occure, please contact us at service@temptech.no

https://manual-lab.com/