UVC9480SLSS

48″ Universal Custom Hood Insert

DIMENSIONS AND INSTALLATION INFORMATION (IN INCHES)

Installation Information: Before installing, consult installation instructions,packed with product, for current dimensional data.

AMP RATING	
120V	6.0

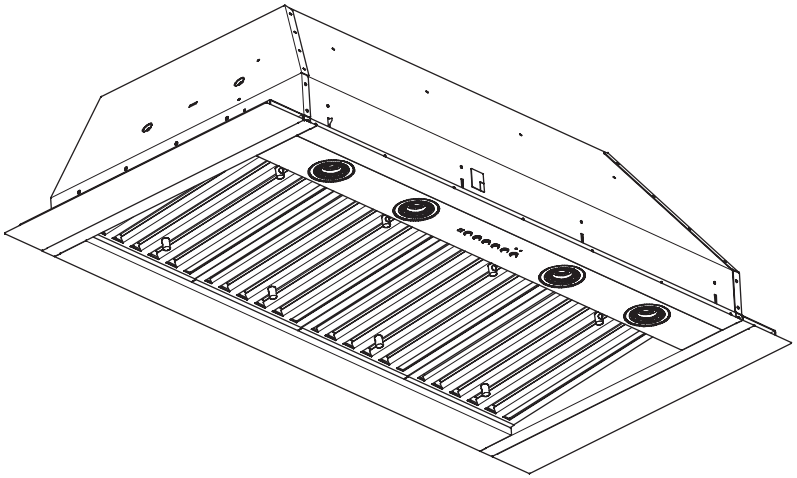

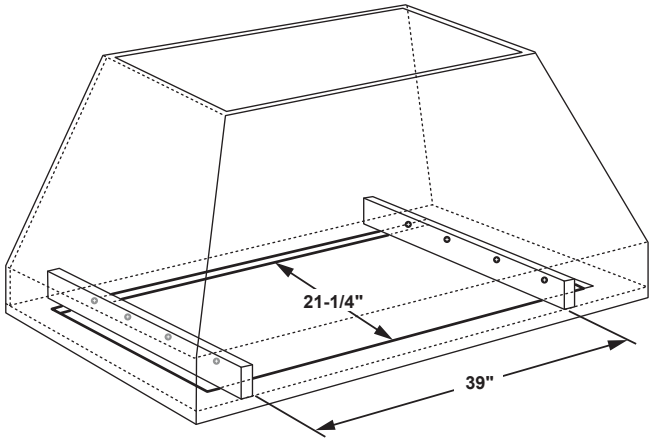

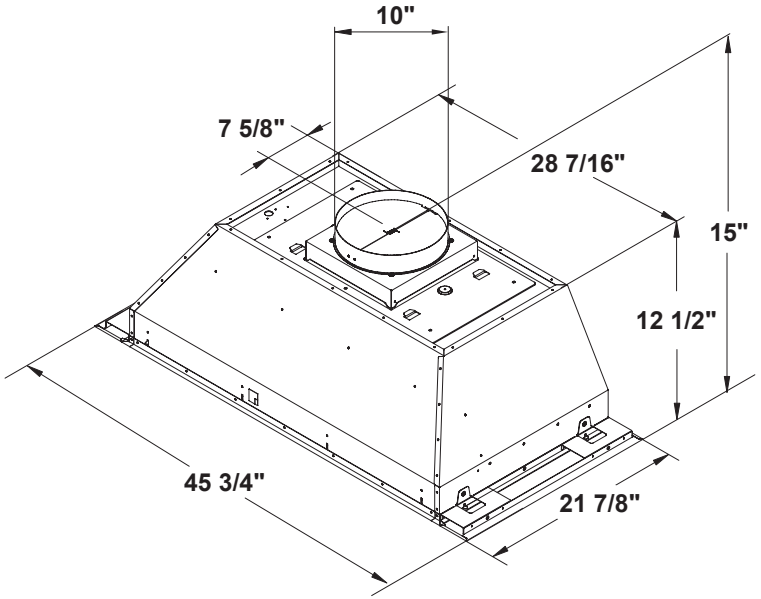

These hoods are secured to the custom cabinet from both sides through 8 screws.
Two 2x4 studs separated by 39" need to be provided on the custom cabinets for installation.

Art is showing the cutout dimensions.

GE APPLIANCES

For answers to your Monogram, GE Café™, GE Profile™ or GE Appliances product questions, visit our website at geappliances.com or call GE Answer Center® Service, 800.626.2000.

Specification Revised 11/22

UVC9480SLSS

48″ Universal Custom Hood Insert

FEATURES AND BENEFITS

Adjustable CFM blower – Two high powered 610 CFM blowers are capable of delivering 1220 CFM air flow.

Brilliant LED dimmable lighting (bulbs included) – 4 long-lasting LED lights ensure even lighting for the entire cooking environment

Electronic backlit controls – Add a sophisticated look with this up-front, easy-to-use display

Premium Baffle Stainless Steel Filters – removes odors and grease from your cooking area and are easy to clean in your dishwasher

WiFi Connect – Control appliances with a smart device or just the sound of your voice

Chef Connect – Automatically control the hood's lights and fan by syncing with the range

Remote control included – Activate and adjust your hood functions from anywhere in the kitchen

Four-speed fan control – Helps draw smoke, grease, odors and moisture out of the kitchen air

Model UVC9420SLSS – Stainless steel

Model UVC9480SLSS – Stainless steel

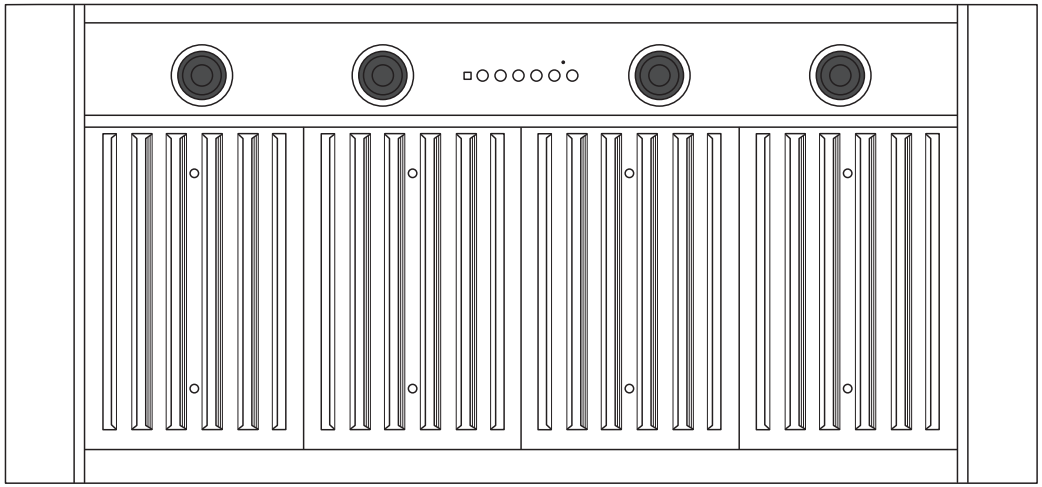

GE APPLIANCES