Manuals+ — User Manuals Simplified.

GO LABEL GL2120TH Thermal Printer Instruction Manual

The Smart Way to Manage
Your Restaurant Operations
Thermal Printer

GoLabel is a wireless label printer designed to work with a tablet running GoOps or SubOps. GoLabel simplifies your food prepping and labeling procedures. This Quick Start Guide will help you familiarize yourself with GoLabel before you get started.

SKIP THE GUIDE AND WATCH OUR "QUICK START" VIDEO!
Watch our "Quick Start" video by scanning the QR code or visiting
www.zippyyum.com/golabelsetup

http://qrs.ly/am6efz7

(888) 636-7557
support@zippyyum.com
www.zippyyum.com

Contents

1 SETUP
2 GETTING TO KNOW YOUR GOLABEL HARDWARE
3 FCC Statement
4 PRINTING LABELS
5 Documents / Resources
6 Related Posts

SETUP

1. Open GoLabel's cover and remove any packaging material and the labels from inside. If the first label has tape on it, remove the tape.

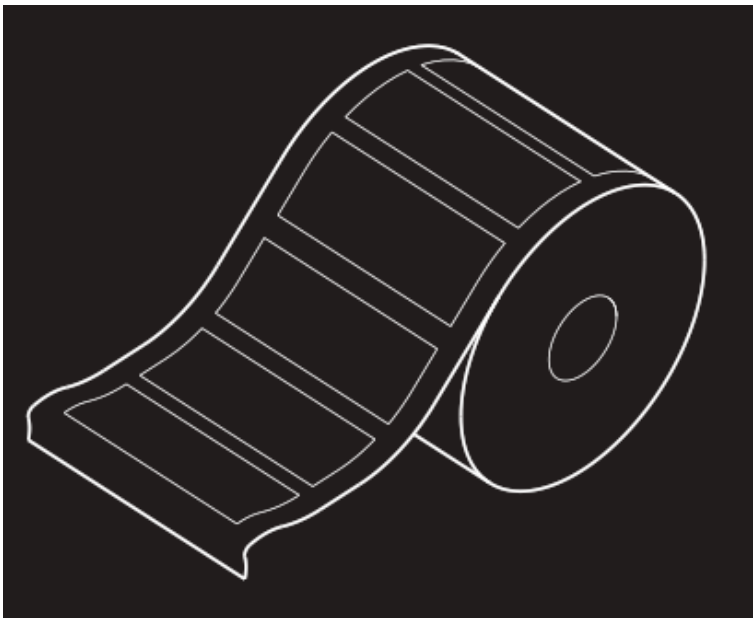

2. Place the roll of labels directly into the printer so the labels feed from the top.

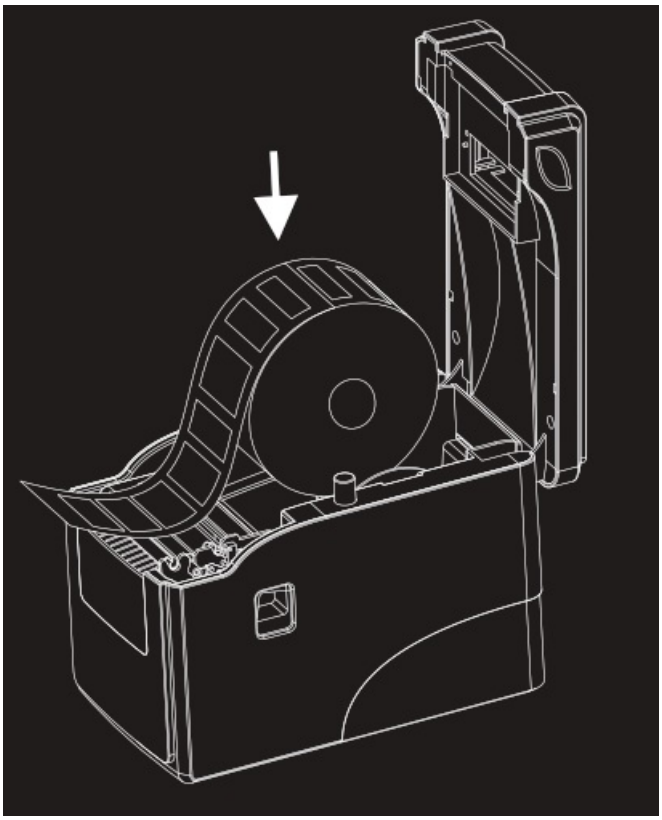

3. Push the roll of labels to the left so the left side of the roll is flush with the left side of the printer.

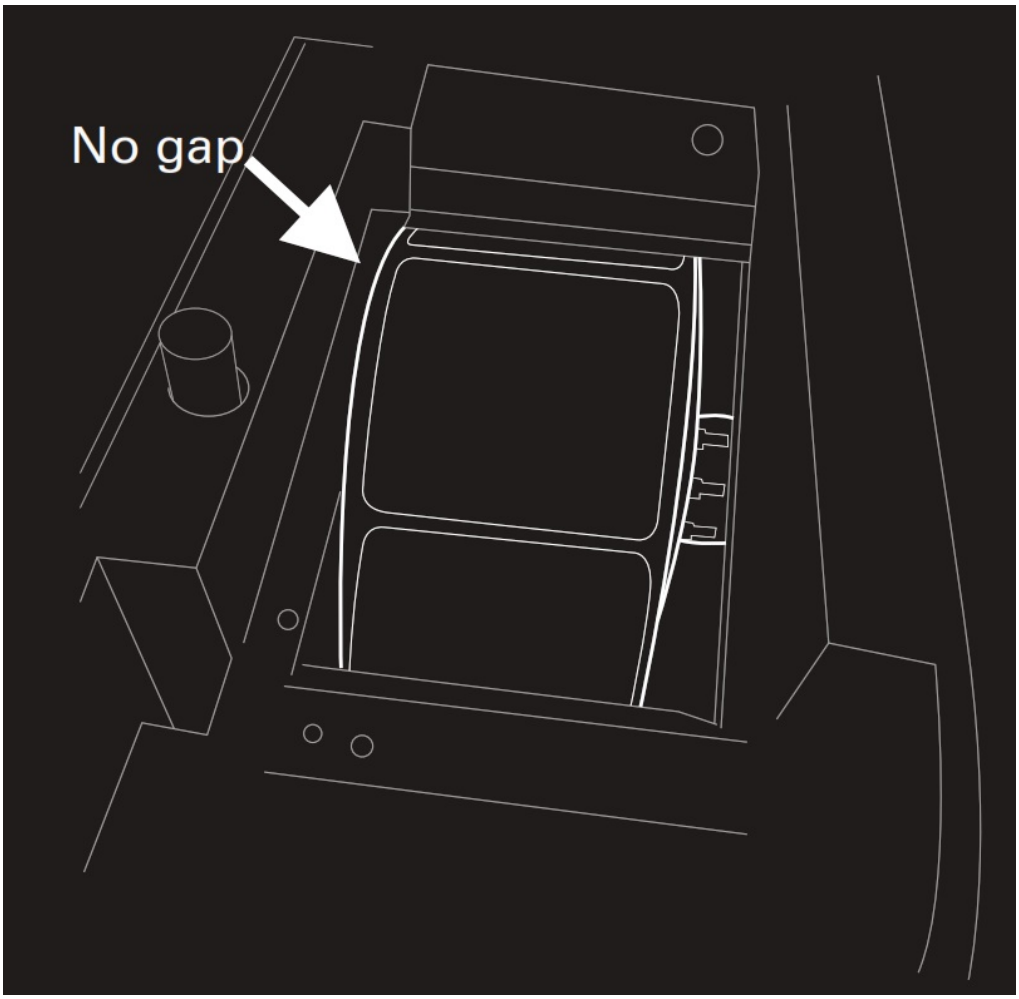

4. Feed the first label through the label feed guides, making sure the labels are aligned on the left side of the printer.

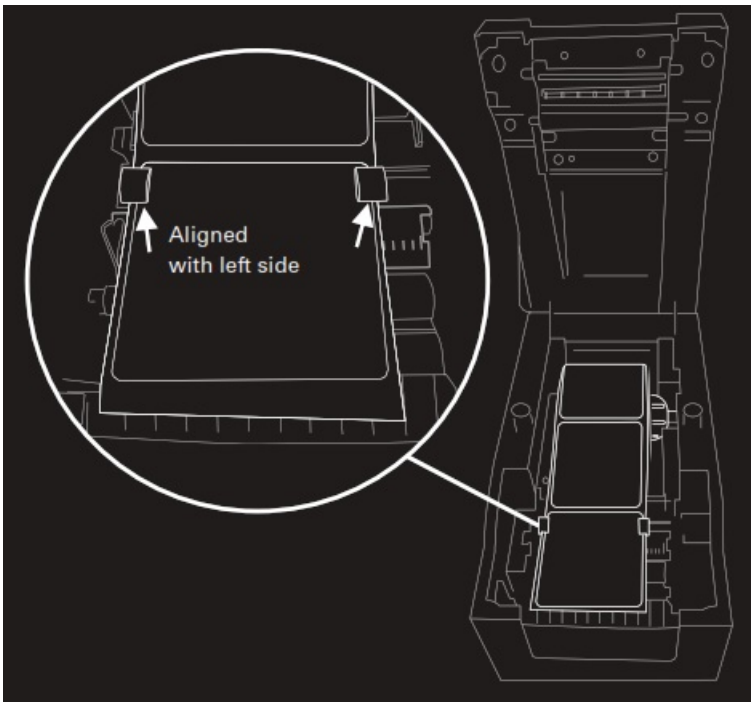

5. If the label is loose in the feed guides, ensure the label feed guides are adjusted to the width of the label by moving the right guide, keeping the left edge of the labels aligned with the left side of the printer.

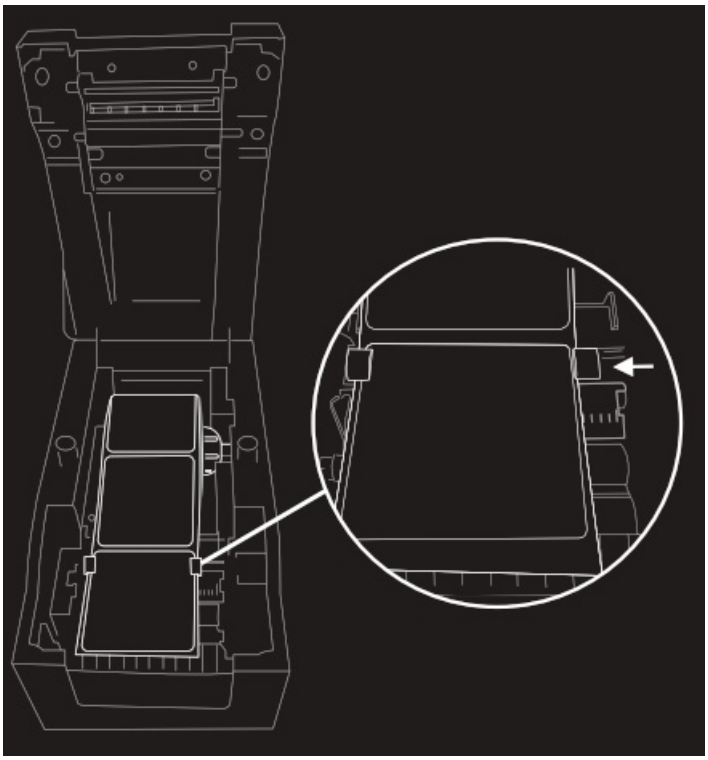

6. Feed the first label through so it is slightly sticking out of the printer. Then close, the plugin, and turn on your GoLabel.

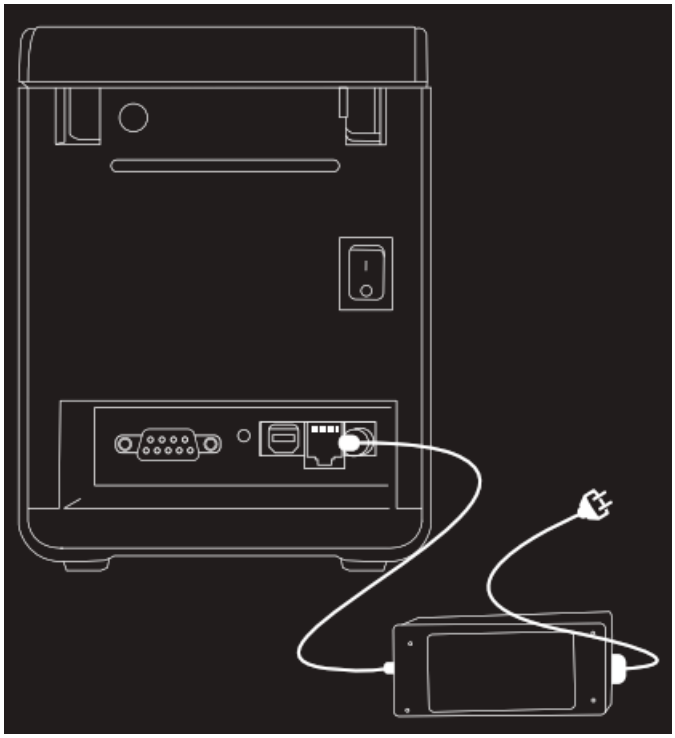

7. Download and install the GoOps or SubOps app on a compatible tablet.

GOOPS	SUBOPS
http://qrs.ly/fy65a8u	http://qrs.ly/pt65a8l

8. Enter your credentials, log into the app, and follow the on-screen Quick Start Guide to pair your GoLabel and set up the app.

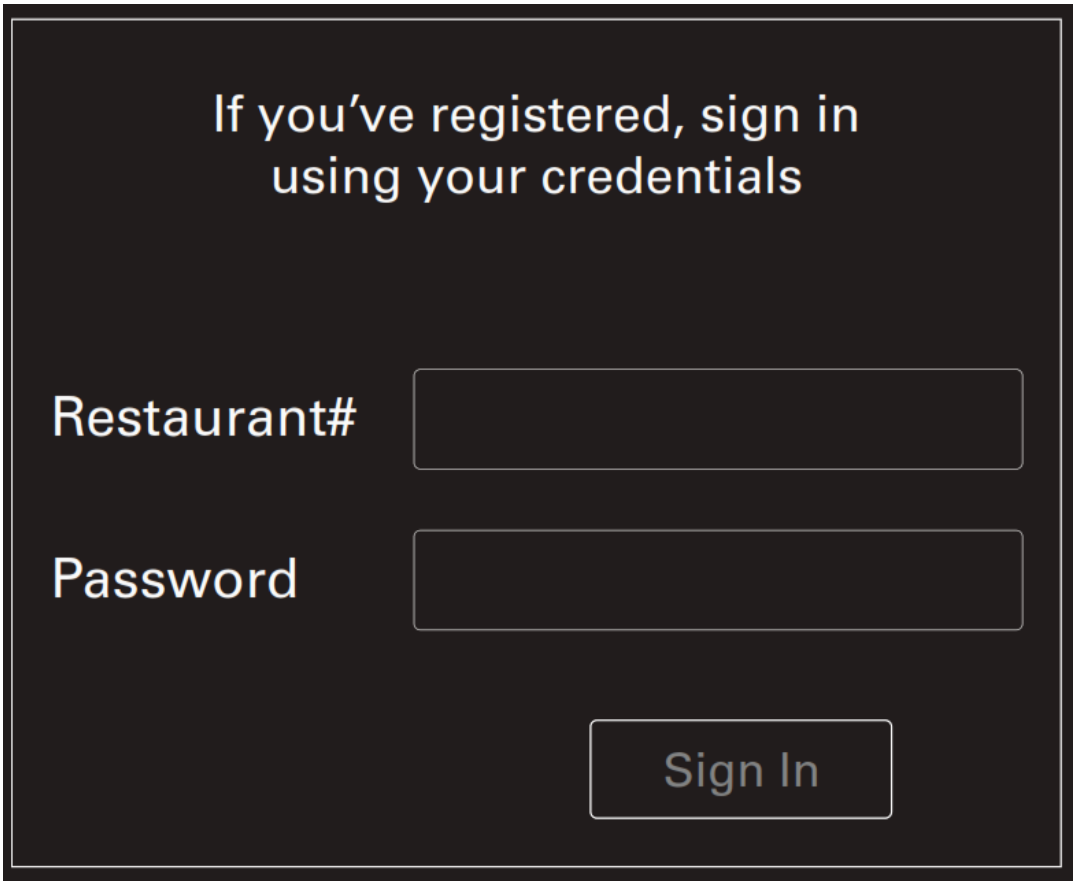

GETTING TO KNOW YOUR GOLABEL HARDWARE

1. Cover Release Button
2. Connection Indicator
3. Error Indicator
4. Pause Button
5. Feed Button
6. Power Button
7. Label Roll Bucket
8. Left Feed Guide

9. Right Feed Guide

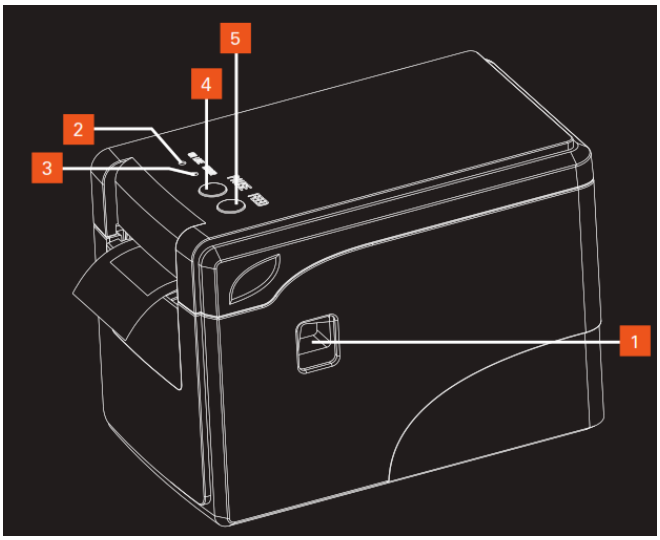

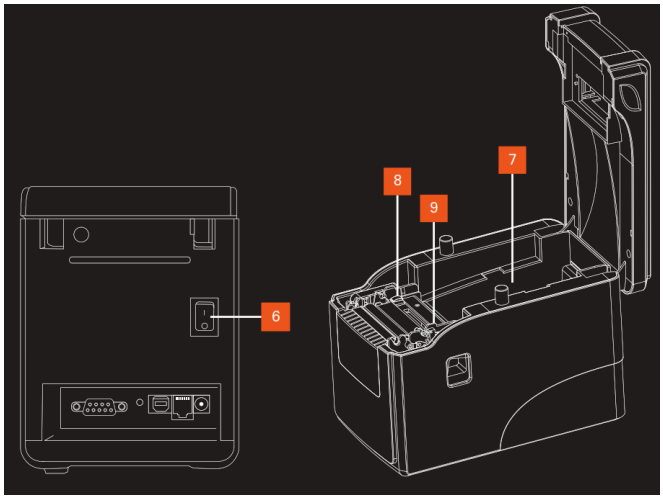

FCC Statement

This equipment has been tested and found to comply with the limits for a Class B digital device, pursuant to part 15 of the FCC Rules. These limits are designed to provide reasonable protection against harmful interference in a residential installation. This equipment generates, uses, and can radiate radio frequency energy and, if not installed and used in accordance with the instructions, may cause harmful interference to radio communications. However, there is no guarantee that interference will not occur in a particular installation. If this equipment does cause harmful interference to radio or television
reception, which can be determined by turning the equipment off and on, the user is encouraged to try to correct the interference by one or more of the following measures:

- Reorient or relocate the receiving antenna.
- Increase the separation between the equipment and receiver.
- Connect the equipment into an outlet on a circuit different from that to which the receiver is connected.
- Consult the dealer or an experienced radio/TV technician for help.

Caution: Any changes or modifications to this device not explicitly approved by the manufacturer could void your authority to operate this equipment.
This device complies with part 15 of the FCC Rules. Operation is subject to the following two conditions: (1) This device may not cause harmful interference, and (2) this device must accept any interference received, including interference that may cause undesired operation.
RF Exposure Information
This equipment complies with FCC radiation exposure limits set forth for an uncontrolled environment. This equipment should be installed and operated with a minimum distance of 20cm between the radiator and your body.

ISED Statement:

- English: This device complies with Industry Canada license-exempt RSS standard (s). Operation is subject to the following two conditions: (1) This device may not cause interference, and (2) This device must accept any interference, including interference that may cause undesired operation of the device.
The digital apparatus complies with Canadian CAN ICES-3 (B)/NMB-3(B).
This device meets the exemption from the routine evaluation limits in section 2.5 of RSS 102 and compliance with RSS 102 RF exposure, users can obtain Canadian information on RF exposure and compliance.
This equipment complies with Canada’s radiation exposure limits set forth for an uncontrolled environment.

This equipment should be installed and operated with a minimum distance of 20cm between the radiator & your body.

PRINTING LABELS

The number on the printer shows how many labels will be printed. After printing a label(s), the number will turn grey and reset to 1.

< Done ☰ | Prepping & Printing Labels | John Smith | Count

PRODUCTS	QUANTITY		CONTAINERS		HOW-TO	PRINT LABEL
Protein						
Cheese Pepper Jck Slcd	2	Pack (1 lb)	1	1/6 container		1
Cheese Swiss Nat Sl 32	2	Pack (1 lb)	1	1/6 container		1
Chs American White Trngl 400S	1	Pack (5 lbs)	2	1/6 container		2
Chs Jck/Ched Shred	1	Bag (2 lbs)	2	1/6 container		2
Chs Provolone Slc	2	Pack (1 lb)	1	1/6 container		2
Egg Patty Ylw 1 5 oz Fz	6	Pack (1 ct)	1	1/3 container		1
Egg Whi Patty 1 5 oz Fz	6	Pack (1 ct)	1	1/3 container		1
Toppings						
Glaze Teryaki		N/A		N/A		1
Mayo Light	1	Pouch (52 oz)	8	Bottles		

Changing the number in the containers or quantity box will make the icon green again, indicating the new number of labels to print.

This icon indicates the item does not need a printed label. Just tap to mark it as completed.

GO LABEL

HVIN: GL2120TH

Documents / Resources

	[GO LABEL GL2120TH Thermal Printer](#) [pdf] Instruction Manual GL2120TH, GU6-GL2120TH, GU6GL2120TH, GL2120TH Thermal Printer, Thermal Printer

Manuals+,