Honeywell

ScanPal™ EDA71 Display Dock

Model EDA71-DB

User Guide

Disclaimer

Honeywell International Inc. ("HII") reserves the right to make changes in specifications and other information contained in this document without prior notice, and the reader should in all cases consult HII to determine whether any such changes have been made. The information in this publication does not represent a commitment on the part of HII.

HII shall not be liable for technical or editorial errors or omissions contained herein; nor for incidental or consequential damages resulting from the furnishing, performance, or use of this material. HII disclaims all responsibility for the selection and use of software and/or hardware to achieve intended results.

This document contains proprietary information that is protected by copyright. All rights are reserved. No part of this document may be photocopied, reproduced, or translated into another language without the prior written consent of HII.

Copyright © 2020-2021 Honeywell International Inc. All rights reserved.

Web Address: www.honeywellaidc.com

Trademarks

Android is a trademark of Google LLC.

DisplayLink is a registered trademark of DisplayLink (UK) Limited.

Other product names or marks mentioned in this document may be trademarks or registered trademarks of other companies and are the property of their respective owners.

Patents

For patent information, refer to www.hsmpats.com.

TABLE OF CONTENTS

Customer Support v
Technical Assistance v
Product Service and Repair v
Limited Warranty v

Chapter 1 - About the Display Dock 1

About the ScanPal EDA71 Display Dock 1
Out of the Box 1
Features of the Dock 2
About the Dock Status LED 2
About the Dock Connectors 2
Connect to Power 2
Connect to Monitor 3
Connect to an Ethernet Network 3
Connect to an USB Device 3

Chapter 2 - Use the Display Dock 5

Check Software on Computer 5
Install DisplayLink Software 5
Download the APK 5
Install the Software 6
Insert EDA71 into the Dock 7

Chapter 3 - Configure the Display App 9

How to Configure the Display Dock Settings 9

Set Display Dock Settings 9
Set Monitor Settings 9
Set Peripheral Settings 10
Set Mode Settings 10

Appendix A - Specifications 11

Label Locations 11
Connected Devices and Specifications 11
Monitor Connections 11
Supported Devices 11
Non-Supported Devices 11
USB Devices 12
Supported Devices 12
Non-Supported Devices 12
Power Supply Specifications 12
Clean the Dock 12
Mount the Display Dock 12

Customer Support

Technical Assistance

To search our knowledge base for a solution or to log in to the Technical Support portal and report a problem, go to www.honeywellaidc.com/working-with-us/contact-technical-support.

For our latest contact information, see www.honeywellaidc.com/locations.

Product Service and Repair

Honeywell International Inc. provides service for all of its products through service centers throughout the world. To obtain warranty or non-warranty service, return your product to Honeywell (postage paid) with a copy of the dated purchase record. To learn more, go to www.honeywellaidc.com and select **Service & Repair** at the bottom of the page.

Limited Warranty

For warranty information, go to www.honeywellaidc.com and click **Resources** > **Product Warranty**.

CHAPTER

1 ABOUT THE DISPLAY DOCK

This chapter introduces the ScanPal™ EDA71 Display Dock. Use this chapter to learn about the basic dock features and how to connect to the dock.

Note: *For more information on the ScanPal EDA71 Enterprise Tablet, go to www.honeywellaidc.com.*

About the ScanPal EDA71 Display Dock

The Display Dock allows the EDA71 to become a personal computer. A monitor, keyboard, mouse, and audio can be connected through the dock via the USB ports. The dock also provides an Ethernet connection.

Out of the Box

Make sure that your shipping box contains these items:

- EDA71 Display Dock (EDA71-DB)
- Power adapter
- Power cord
- Regulatory Sheet

If any of these items are missing or appear damaged, contact Customer Support. Keep the original packaging in the event that you need to return the Display Dock for service or if you want to store the charger when not in use.

Caution: We recommend the use of Honeywell accessories and power adapters. Use of any non-Honeywell accessories or power adapters may cause damage not covered by the warranty.

Features of the Dock

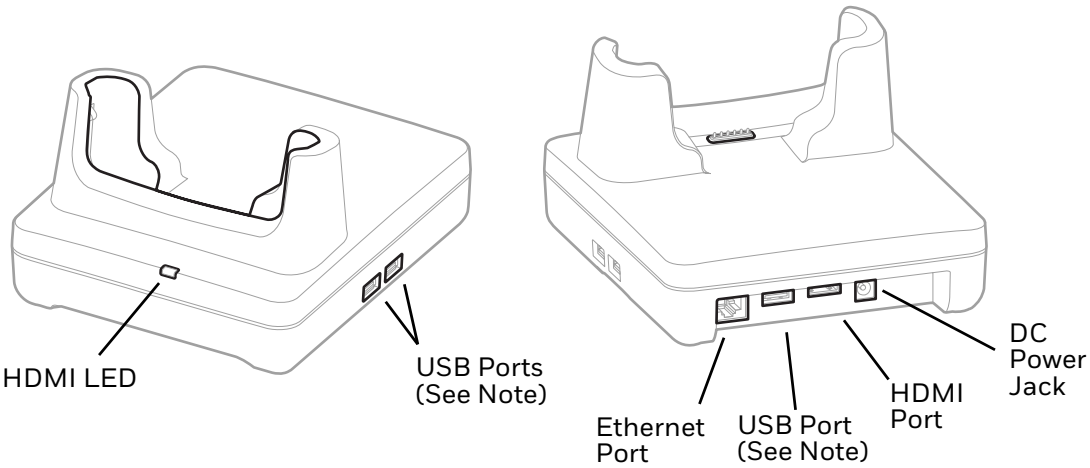

Note: *The dock supports USB direct connections only. The dock does not support USB hub connections, including keyboards with USB port(s).*

About the Dock Status LED

Status	Description
Constant Green	The dock is connected through HDMI.
Off	The dock is not connected or lost connection through HDMI.

About the Dock Connectors

Warning: Ensure all components are dry prior to mating terminals/ batteries with peripheral devices. Mating wet components may cause damage not covered by the warranty.

Connect to Power

1. Plug the power cord into the power supply.
2. Plug the power supply cable into the power jack on the back of the dock.
3. Plug the power cord into a standard wall outlet.

Connect to Monitor

Note: *See Monitor Connections for a list of approved connections.*

1. Plug the HDMI cable into the dock.
2. Plug the other end of the HDMI cable into the monitor.

Connect to an Ethernet Network

1. Plug the Ethernet cable into the dock.
2. Place the EDA71 tablet in the dock.

Note: *For advanced Ethernet settings, go to www.honeywellaidc.com for the ScanPal EDA71 Enterprise Tablet User Guide.*

Connect to an USB Device

Note: *See USB Devices for a list of approved USB devices.*

Note: *The dock supports USB direct connections only. The dock does not support USB hub connections, including keyboards with USB port(s).*

Plug the USB type A cable into a USB port on the dock.

CHAPTER

2 USE THE DISPLAY DOCK

Use this chapter to verify and install DispalyLink® software on the tablet and use the Display Dock.

Check Software on Computer

Before using the Display Dock, ensure your tablet is running the DisplayLink software.

- If your EDA71 tablet is powered by Android 8 or higher, the DisplayLink software has already been installed on the tablet as a Honeywell default.
- If your EDA71 tablet is powered by Android 7 or lower, you will need to download and install the DisplayLink software on the tablet.

Install DisplayLink Software

There are two ways to download the DisplayLink software to the tablet:

- Download the DisplayLink Presenter app from Google Play.
- Download the DisplayLink Presenter APK provided by Honeywell on T*echnical Support Downloads Portal*.

Download the APK

To download the DisplayLink Presenter APK:

1. Go to www.honeywellaidc.com.
2. Select **Resources** > **Software**.
3. Click on the *Technical Support Downloads Portal* link, https://hsmftp.honeywell.com.
4. Create an account if you have not already created one. You must have login to download the software.

5. Install the *Honeywell Download Manager* tool on your workstation (e.g. laptop or desktop computer) prior to trying to download any files.
6. Locate the software in file directory.
7. Select **Download** next to the software zip file.

Install the Software

Note: *The EDA71 tablet must have power for the entire length of the install process or it could become unstable. Do not attempt to remove the battery during the process.*

1. Swipe up from the bottom of the Home screen to access all apps.
2. Tap **Settings** > **Provisioning mode** under *Honeywell settings*.
3. Tap the toggle button to turn Provisioning mode **On**.
4. Connect the EDA71 to your workstation.
5. On the EDA71, swipe down from the top of the screen to see the notifications.
6. Tap the **Android System** notification twice, to open the options menu.
7. Select **File Transfer.**
8. Open the browser on your workstation.
9. Save the DisplayLink Presenter file (*.apk), version 2.3.0 or higher, in one of the following folders on the EDA71 tablet:
   - **Internal shared storage\honeywell\autoinstall**
     Files saved to this folder for installation, do not persist when a Full factory reset or Enterprise data reset is performed.
   - **IPSM card\honeywell\autoinstall**
     Files saved to this folder for installation, do not persist when a Full factory reset is performed. However, the software does persist if an Enterprise data reset is performed.
10. Swipe up from the bottom of the Home screen to access all apps.
11. Tap **AutoInstall Settings** and verify **AutoInstall** is enabled.
12. Tap **Packages Upgrade** from the AutoInstall Settings screen. The computer initiates a reboot and installs the software. When the install is finished, the lock screen appears.
13. Once installation is complete, turn Provisioning mode Off.

Insert EDA71 into the Dock

Ensure the tablet is fully seated into the dock.

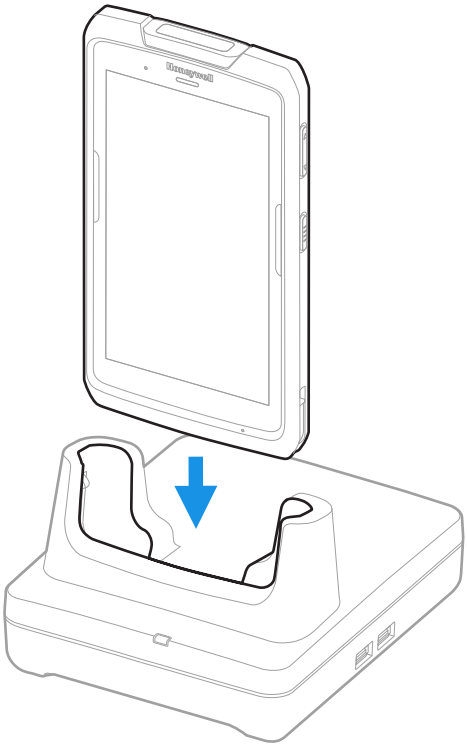

The first time you insert the tablet into the dock, prompts appear on the screen. Follow the prompts to:

- Set DisplayLink Presenter as the default app to open when the USB device is connected.
- Start capturing everything that is displayed on your screen.

Note: *Check the "Don't show again" box if you do not want the prompts to appear every time you insert the EDA71 into the dock.*

The tablet automatically changes to landscape and the resolution updates to the monitor settings.

CHAPTER

3 CONFIGURE THE DISPLAY APP

Use this chapter to learn how to configure the Display Dock settings through the ScanPal EDA71 Enterprise Tablet.

How to Configure the Display Dock Settings

You can configure the parameters on the computer for the Display Dock using the DisplayDockService app.

Set Display Dock Settings

The Display Dock Settings app is available from the all apps menu under Settings.

1. Swipe up from the bottom of the Home screen to access all apps.
2. Tap **DisplayDockService**.

Set Monitor Settings

1. Swipe up from the bottom of the Home screen to access all apps.
2. Tap **DisplayDockService**.
3. Choose one of the following options to set the view:
   - Tap **System portrait screen,** to have the computer stay in portrait view.
   - Tap **System landscape screen**, to have the computer stay in landscape view.
4. To set the system resolution, tap **Resolution** and choose one of the following options:
   - **1080 x 1920**
   - **1920 x 1080**
   - **720 x 1280**
   - **540 x 960**

5. To set the density, tap **Density** and chose one of the following options:
   - **160**
   - **240**
   - **320**
   - **400**
6. To set the how the tablet backlight responds when a display is connected, tap **Reduce backlight,** and then one of the following options:
   - Tap **Enable,** to have the tablet backlight automatically dim.
   - Tap **Disable,** for no adjustment.

Set Peripheral Settings

1. Swipe up from the bottom of the Home screen to access all apps.
2. Tap **DisplayDockService**.
3. To set the right mouse button to the back key, tap **Right mouse button** to toggle the feature on or off.
4. Tap **HDMI audio** to toggle between **Sound to terminal** or **Sound to external monitor**.

Set Mode Settings

1. Swipe up from the bottom of the Home screen to access all apps.
2. Tap **DisplayDockService**.
3. To set the external monitor mode:
   - Select **Primary Mode** to automatically adjust as configured in settings or
   - Select **Mirror mode** to match the terminals settings.

APPENDIX

A SPECIFICATIONS

Label Locations

Labels on the bottom of the dock contain information about the dock including, compliance marks, model number and serial number.

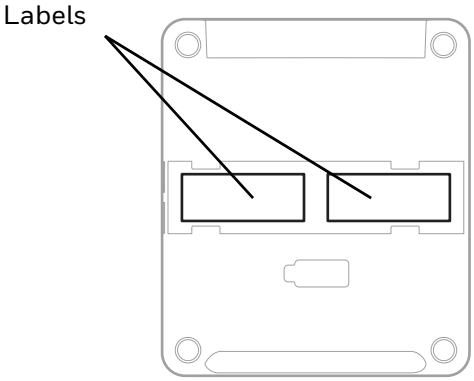

Connected Devices and Specifications

Monitor Connections

Supported Devices

- HDMI versions 1.4 and above
- VGA - supported through HDMI/VGA converter
- DVI - supported through HDMI/DVI converter

Non-Supported Devices

- HDMI splitter for two monitors
- Display Port

USB Devices

Supported Devices

- Standard three button mouse with scroll
- Standard QWERTY keyboard without HUB/USB type A ports on the keyboard
- USB headset/USB to 3.5 mm audio converter
- USB mass storage devices (thumb drives), not recommended for large transfers (over 1GB)

Non-Supported Devices

- USB Hubs
- USB devices with additional USB type A ports

Power Supply Specifications

Note: *Use only UL Listed power supply that has been qualified by Honeywell.*

Output Rating	12 VDC, 3A
Input Rating	100-240 VAC, 50/60 Hz
Operating Temperature	-10°C to 50°C (14°F to 122°F)
Max Terminal Input	5VDC, 2A

Clean the Dock

You may need to clean the dock to keep the dock in good working order. Clean the dock as often as needed for the environment in which you are using the dock with a dry soft cloth.

Mount the Display Dock

You can mount the dock on a flat, horizontal surface such as a desktop or workbench with an optional DIN rail.

Mounting hardware required:

- DIN rail
- 3/16-inch diameter x 5/8-inch long pan head screw
- 1/2-inch OD x 7/32-inch ID x 3/64-inch thick washer
- 3/16-inch diameter nut

1. Slide the DIN rail into the slot on the bottom of the dock.
2. Secure the DIN rail to the flat surface with the hardware.

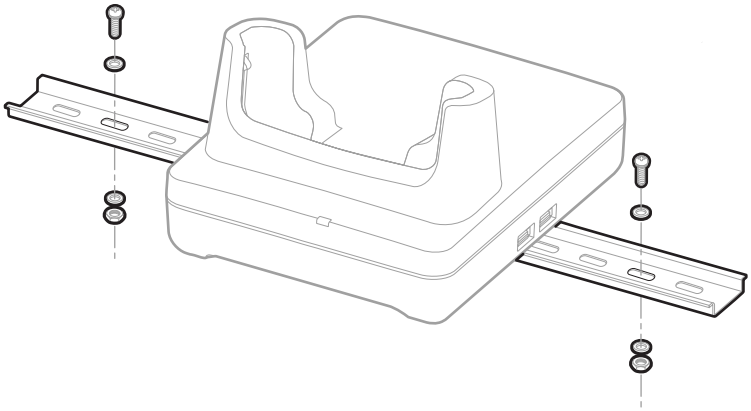

Honeywell
9680 Old Bailes Road
Fort Mill, SC 29707

www.honeywellaidc.com

EDA71-DB-EN-UG Rev B
01/21