Manuals+ — User Manuals Simplified.

CONRAD C96 Universal Blind Spot Detection System User Manual

Universal Blind Spot Detection System
User Manual
Model No.: C96

Thank you very much for purchasing our millimeter-wave blind spot detection system! This product is suitable for all passenger car models and please read this product manual carefully for proper installation and removal before using this product. We will be glad to provide you with better products and services!

Contents

1 List of items
2 Working principle
3 Product Characteristics
4 Product Specifications
5 Function Introduction:
6 Installation Diagram
7 Documents / Resources
7.1 References
8 Related Posts

List of items

Numbering	Item Name	Quantity	Physical Pictures

1	Main Control Box	1	
2	Millimeter-wave Sensor wit h plastic bracket (for winds hield installation)	1	
3	Buzzer	1	
4	LED Light	2	
5	Main Harness	1	
6	LED Light Extension Cable	2	
7	Sensor Extension Cable	1	
8	Sticker	1	
9	Cable Tie	10	

10	User Manual	1	
11	Metal Bracket(for Number plate installation)	1	

Working principle

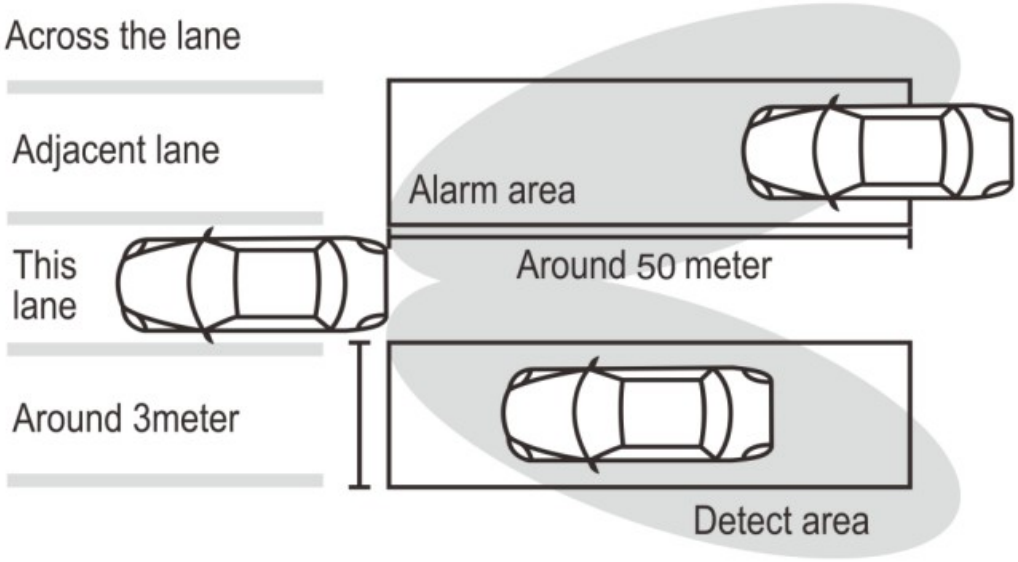

This product uses the latest 77GHz millimeter-wave radar technology. Antenna is 2 Transmit 4 Receive (2T4R),antenna horizontal angle is 120 degrees, the use of super-computing technology, data in high-speed driving can be quickly calculated, can simultaneously detect more than 100 targets, accurately detect the distance of vehicles in high-speed approach to your car via behind and the left and right side, keeping real-time detection on the rear view mirror field of view blind spot area, the use of advanced algorithm modeling to ensure that it will not detect the third lane. When a vehicle is in a hazardous blind spot, the system will alarm through the buzzer and LED light (called sound and light alarm), timely notify the driver to take the necessary measures to avoid accidents. The sensor does not give an early warning reaction to stationary objects and will only alert when the relative distance is reduced or larger. In the process of driving forward, there will be no roadside isolation zone, green belt etc. to make an alarm response.

Product Characteristics

3.1 The system consists of 1 radar sensor with plastic bracket, 1 main control box, 2 LED lights,1 buzzer, a set of wires, some 3M tapes and cable ties etc.
3.2 The radar frequency is 77GHz.
3.3 Wide voltage design,DC9~18V,can be widely used in cars, SUVs, MPVs, pick up trucks and so on.
3.4 With an advanced radar chip, the antenna has a 2 Transmit 4 Receive (2T4R) antenna with a horizontal angle of 120 degrees, and can detect and calculate more than 100 targets simultaneously with high-speed computing capabilities. Accurate ranging angles are achieved to ensure that the rear vehicle is fully forecasted, while the cars in the third road will not be tested.
3.5 The detection range is 3 x 50 meters.
3.6 With BSD (Blind Spot Detection), LCA (Lane Change Assist), RCTA (Rear Cross Traffic Alert), Active Overtaking Alarm(AOA), Same Speed
Alarm ,in total 5 functions.

3.7 Remind of the driver be cautious when change lanes via LED lights and buzzer alarms.
3.8 Power management IC design, low power consumption, long working time.
3.9 Waterproof design with IP67 grade.
3.10 Operating temperature is -20 to 70 degrees
3.11 Adjustable mounting bracket for all types of cars.

Product Specifications

4.1 Product size

Numbering	Item Name	Size
1	Main Control Box	67mm * 56.6mm*24mm
2	Sensor	28 x 28 x 23mm
3	Buzzer	52mm x40mmx25mm
4	LED Light	φ25.5 * 8.5mm

4.2Technical Parameters

Numbering	Project	Technical Parameters
1	Operating Voltage	DC 9-18V
2	Operating Current	180mA
3	Buzzer Alarm Decibels	80 100dB
4	Frequency	77Ghz
5	Maximum Detection Range	Trucks:0.3m to 50m Cars:0.3m to 50m Motorcycles:0.3m to 50m Pedestrians:0.3m to 10m
6	Probe Speed Range	1km/h 200km/h
7	Alarm Mode	Alarm Mode1:LED constantly on; Alarm Mode2:LED flashing +Buzzer beeping
8	Horizontal Angle	120°
9	Operating Temperature	-20℃ +70℃
10	Storage Temperature	-30℃ +80℃

Function Introduction:

After installation and adjustment, the product will have the following functions:
5.1 The system starts the self-checking function
After the car starts, the system starts the self- checking function, led flashes 2 times, the buzzer sounds, and then the system goes into standby operation.
5.2 Blind Spot Detection System (BSD).
After the car is started and in non-R mode, the system starts the BSD function:
The car is driving forward normally, without turning lights, when the rear side of the driveway has a target car at a higher speed than your car in the blind area, generated a first-level alarm, the corresponding side of the LED is always bright, until the target leaves the monitoring area, cancel the warning;
The car is driving forward normally, in the state of turning lights, when the target car in the rear lane of the side enters the blind area monitoring area at a higher speed than the vehicle, a secondary alarm is generated, and the LED on the corresponding side is always bright until the target leaves the monitoring area and the warning is cancelled

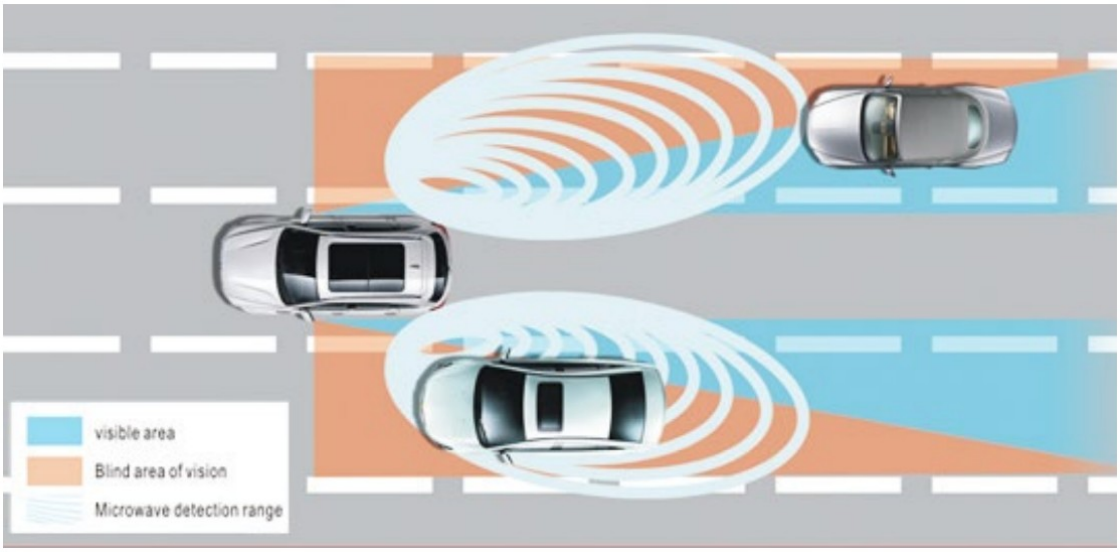

5.3 Lane Change Assist (LCA)
After the car is started and in non-R mode, the system starts the vehicle close to the LCA lane change assist system alert function:
The car is driving forward normally, without turning lights, when the rear side of the lane has a target car at a higher speed than the vehicle into the lane auxiliary monitoring area to produce a first-level alarm, the corresponding side of the LED is always bright, until the target leaves the monitoring area, cancel the warning;
The car is driving forward normally, playing the left turn light state, ready to change lane to the left, when the left rear lane has a target car at a higher speed than the vehicle into the lane auxiliary monitoring area to produce a secondary alarm, the corresponding side of the LED flashing, while the buzzer chirping alarm, until the target leaves the monitoring area, cancel the warning; When waiting for a red light or a short stop on the side of the road, the vehicle speed is 0km/H, if there is a car next to the speed of more than 5KM/H close to or more than, the system will produce a level of alarm, the corresponding side of the LED is always bright, the buzzer does not call, until the target leaves the monitoring area, cancel the warning;

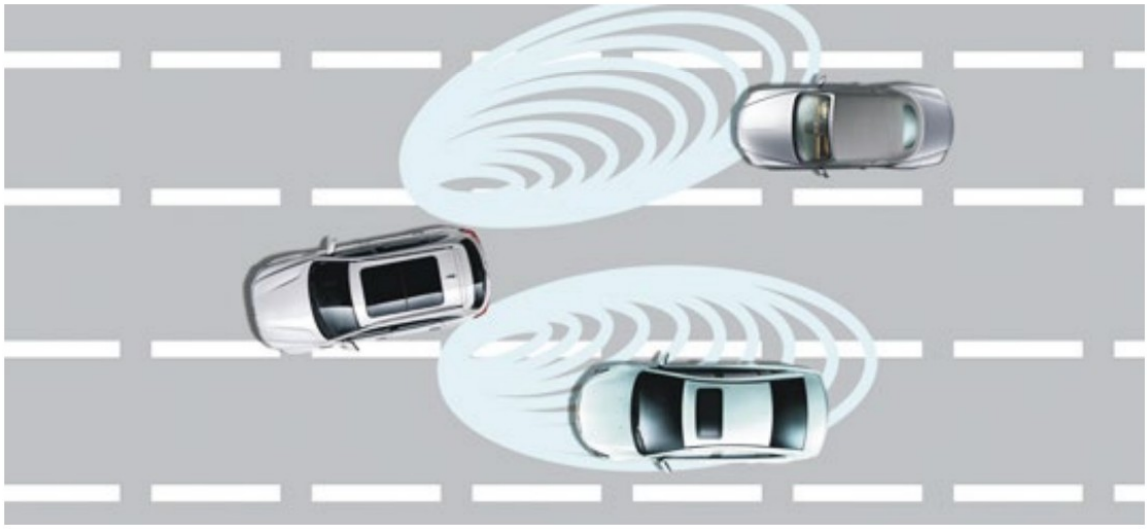

5.4 Rear Cross Traffic Alert (RCTA)

The car is stopped and in R-end, and the system activates the RCTA function: When the target car in a horizontal manner driving into the alarm range, the system began to alarm, LED flashing, buzzer sound, generated a warning, until the target left the alarm area, the warning canceled.

The target car enters from the left, the left LED flashes, the buzzer alerts, the target car enters from the right, the right LED flashes, the buzzer alerts.

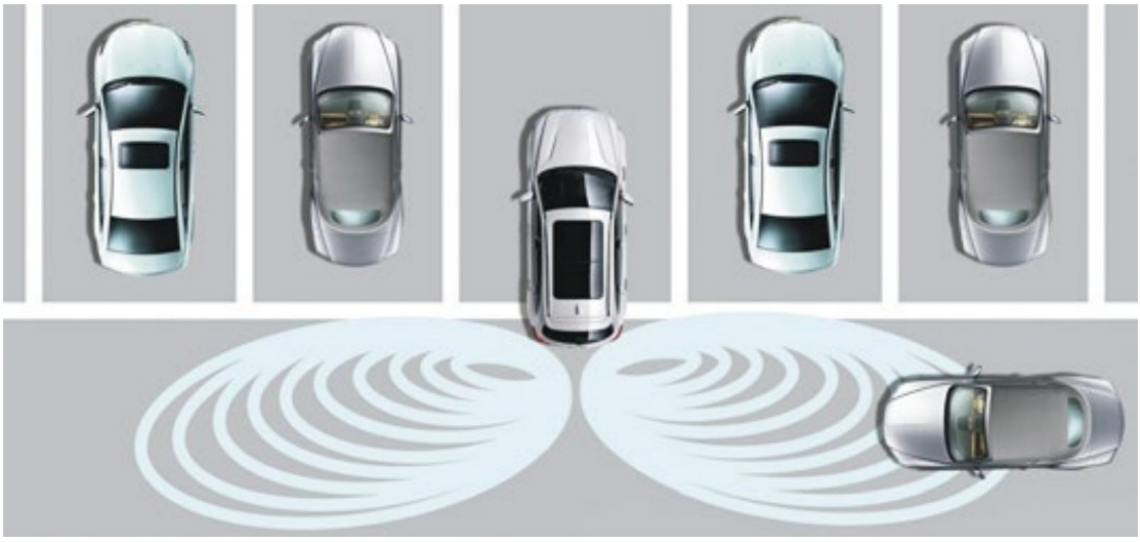

5.5 Active Overtaking Alert (AOA).

The system activates the overtaking alert function when the vehicle is in nonR mode and the vehicle is in motion:

When the vehicle speed is higher than the target car is in the overtaking, when the target car enters the alarm range, a first-level warning is generated, and the LED on the corresponding side is always bright until the target leaves the alarm area and cancels the warning.

When the vehicle speed is higher than the target car is in the overtaking, when the target enters the monitoring range and turns on the steering light on the corresponding side, a secondary warning is generated, the LED on the corresponding side flashes, the buzzer alarm is raised until the target leaves the alarm area and the warning is canceled.

5.6 Same Speed Alarm (Blind Spot Keeping).

The car is in front of the target car, but the target car has been in the blind area of the car, with two cars basically the same speed forward, the system starts the blind zone maintenance function, produces a level warning, the corresponding side of the LED is always bright, until the target leaves the alarm area, cancel the warning;

The car is in front of the target car, but the target car has been in the blind area of the car, to two cars basically the same speed forward, the system starts the blind zone maintenance function, if the turn light signal is turned on at this time, then produce a secondary warning, the corresponding side of the LED flashing, buzzer alarm, until the target leaves the alarm area, cancel the warning;

Installation Diagram

6.1 Product Installation Diagram

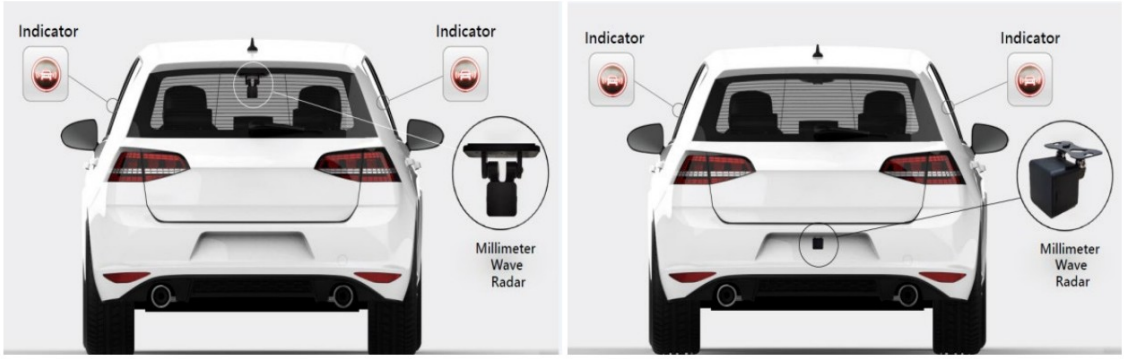

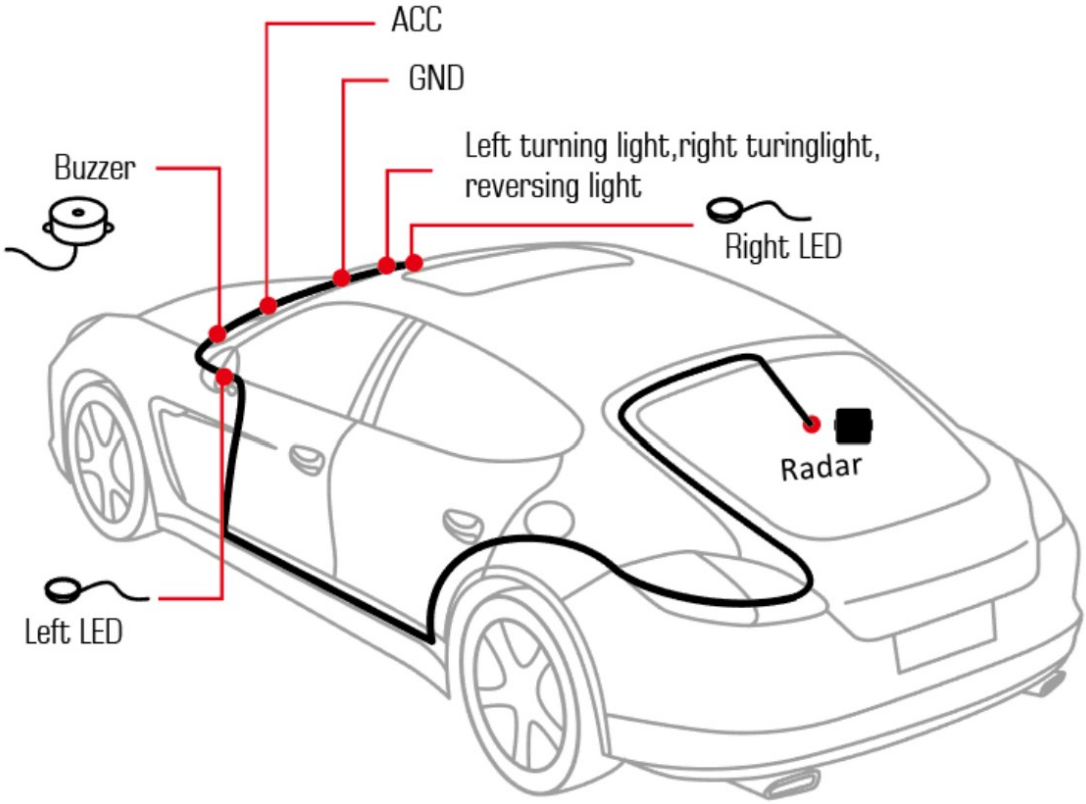

6 .2 Wiring Diagram

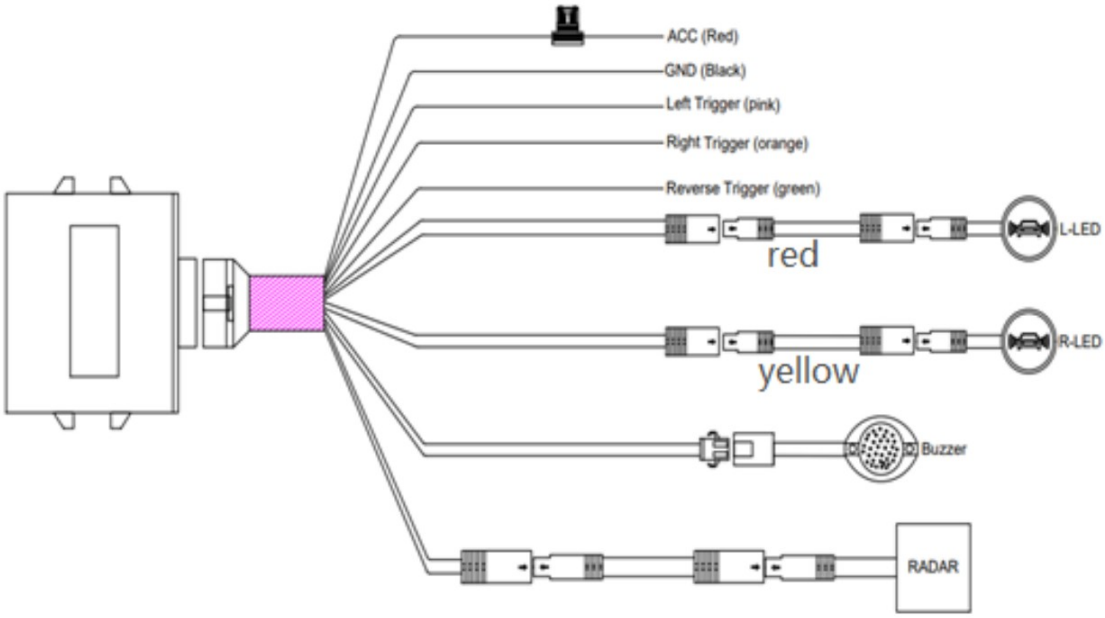

6 .3 Precautions for Installation Operations

6.3.1 Before installation, loosen the negative pole of the car battery.

6.3.2 Do not pull the harness hard when removing the connector, as this may damage the harness, and insert it into the connector until it is effectively fastened (with a fastening sound).

6.3.3 The arranged harness shall be secured to the harness of the car with a tie strap so that it does not droop, is free of anomalies, and the excess part of the harness strap terminal shall be removed.

6.3.4 Demolition and installation should be strictly in accordance with the relevant requirements of the Vehicle Service Manual, as far as possible to avoid damage to parts, if accidental damage, please replace the corresponding parts in a timely manner.

6.4 Microwave sensor placement requirements

6.4.1 Microwave sensors (signal transmitters) can only penetrate the plastic bumper housing.
6.4.2 There must be no metal interference in front of the microwave sensor (signal transmitter).
6.4.3 Do not install the microwave sensor (signal transmitter) in front of the fluorescent lamp

6.5 Sensor Installation Steps:

Note: Please ensure that the heat insulation film on the rear windshield does not technically contain metal components.
Please prepare a tape measure, a multimeter, and an alcohol pad/ clean rag before doing the following installation steps.

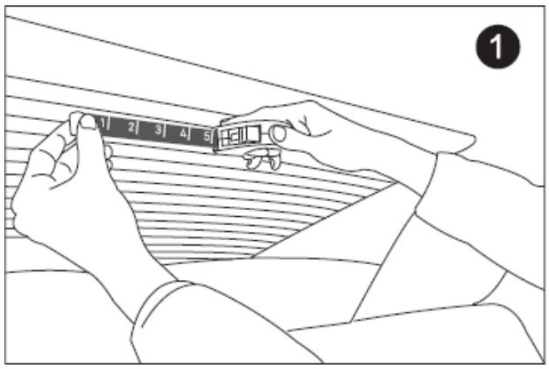

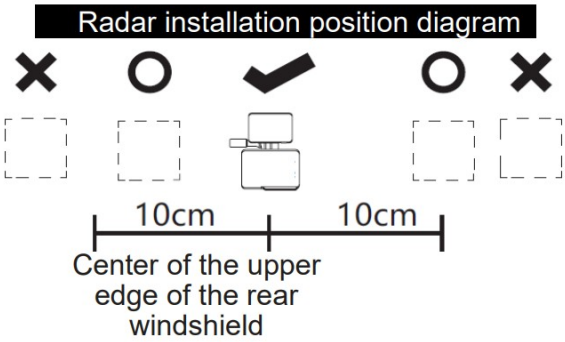

Find a position ±10cm at the center of the upper edge of the rear windshield with a tape measure, and wipe it with an alcohol pad/ clean rag.
Note 1: There must be no other objects, such as driving recorder, brake light and other devices within 5cm left and right of the sensor.
Note 2: If your car's third brake light is located at the top center of the car's rear windshield, it is recommended to install the radar at a position 2cm below it.

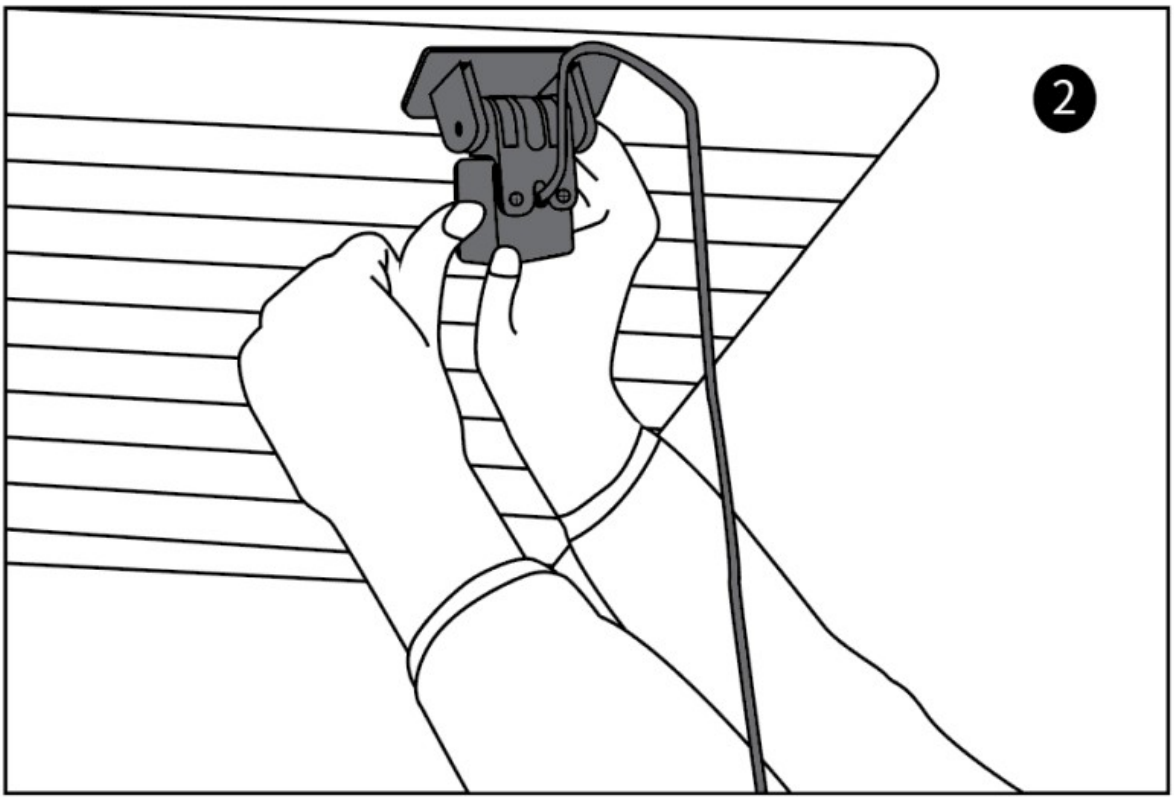

Tear off the tape of the bracket of the sensor, and attach the base bracket parallel to the ceiling. It is recommended to attach the device close to the ceiling or align along the defog line. Be careful not to attach it to the defog line. Or stick on the top side of the rear windshield, like the below picture shown.

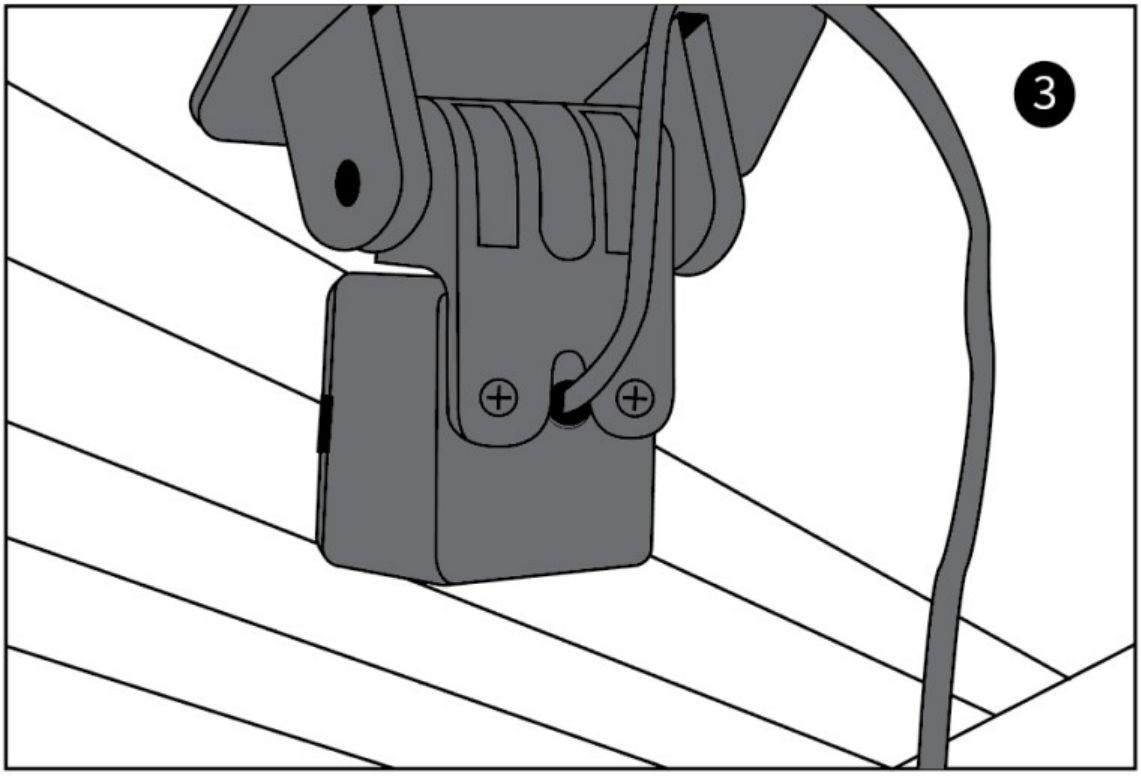

Flip down the leveler at the rear of the sensor and adjust the bracket until the bubble in the leveler is located within the center of the two vertical black lines, then tighten the knob.

⚠ **Note** After installation, please stand behind the car and check if the sensor is located on the center of the car and if the vertical angle is 90 degrees. If the sensor is biased to the left or right, it may result in a long detection distance on one side and a short detection distance on the other side.

12 Page Start

⚠

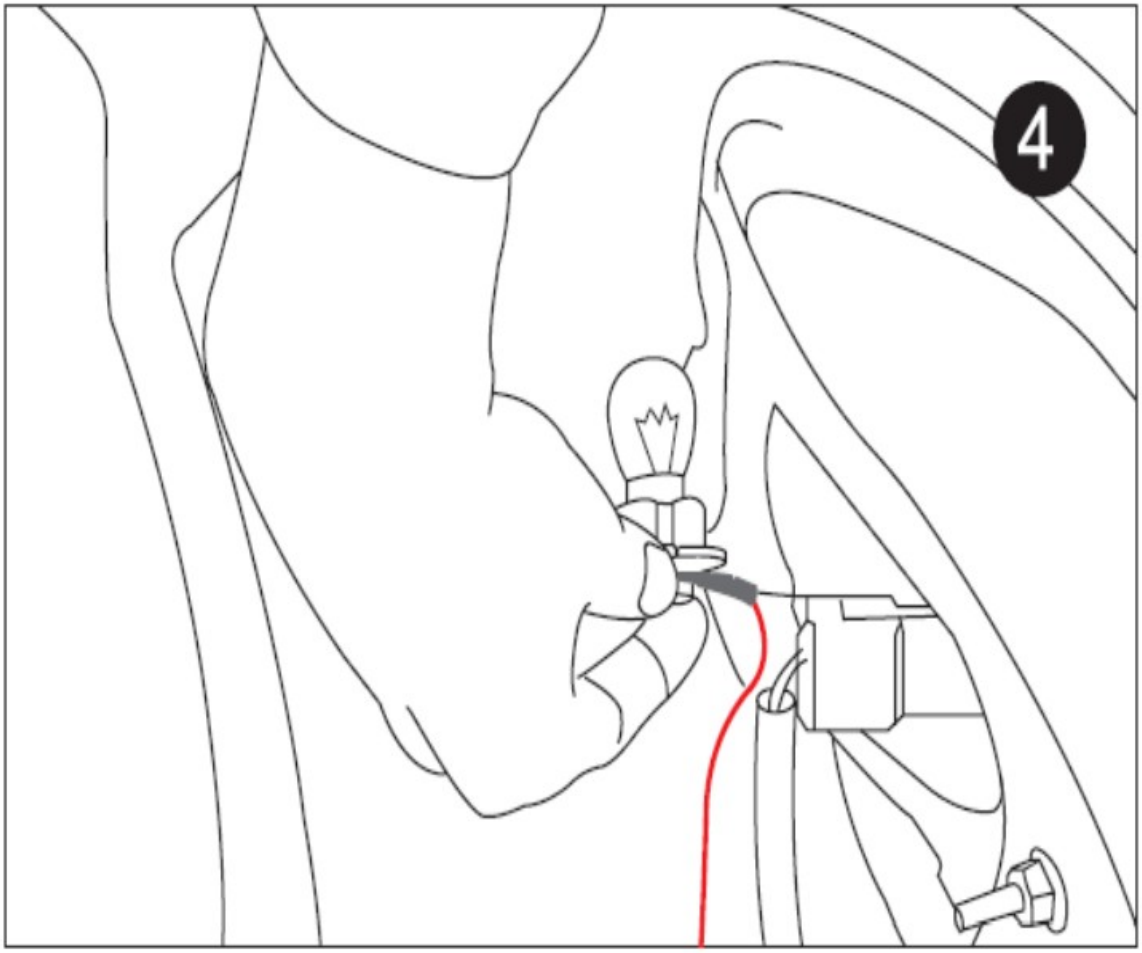
4

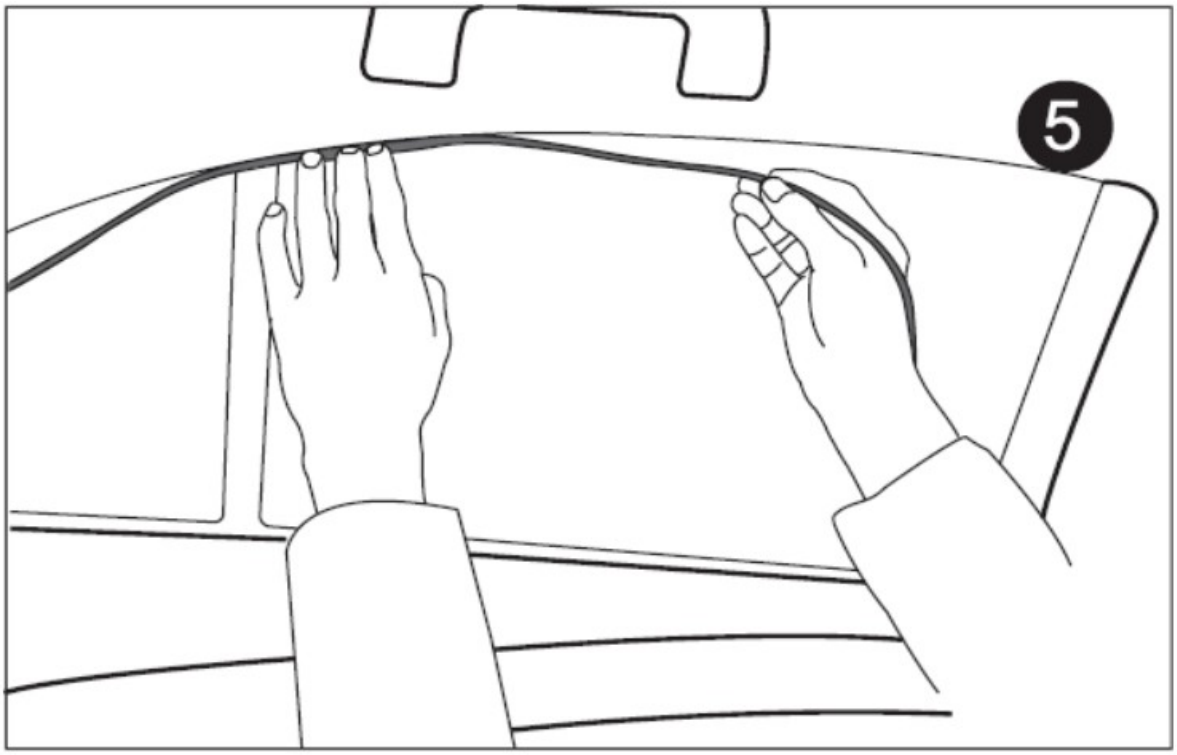
5

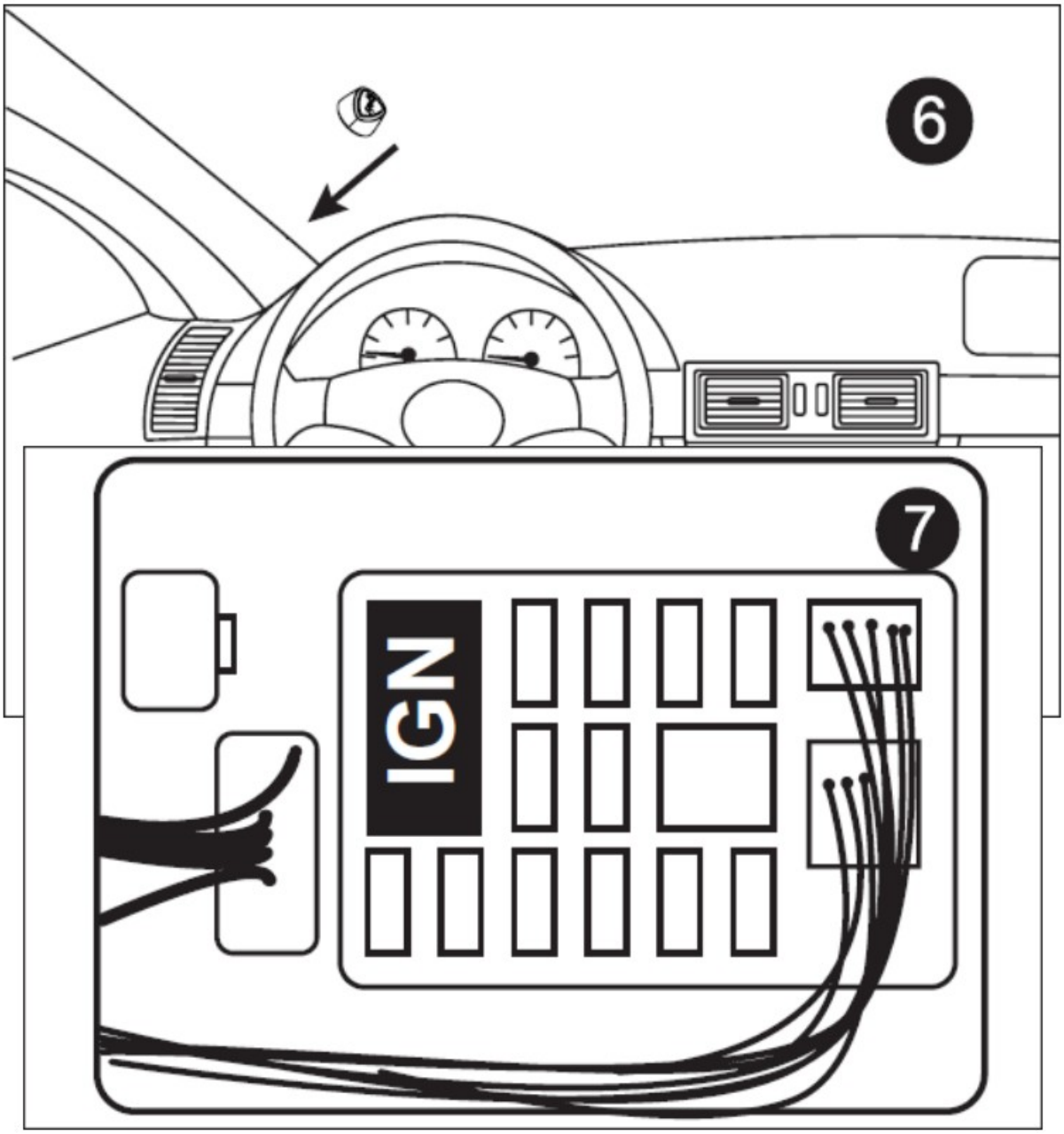
6
7
IGN

CONRAD

Documents / Resources

Universal Blind Spot Detection System

User Manual

Model No.: C96

Thank you very much for purchasing our millimeter wave blind spot detection system. This product is suitable for all passenger car models and please read this product manual carefully for proper installation and removal before using this product. We will be glad to provide you with better products and services!

1、List of items

Numbering	Item Name	Quantity	Physical Picture
1	Main Control Box	1	
2	Millimeter wave Sensor with plastic bracket (for windshield installation)	1	
3	Buzzer	1	
4	LED Light	2	

[CONRAD C96 Universal Blind Spot Detection System](#) [pdf] User Manual
C96, C96 Universal Blind Spot Detection System, Universal Blind Spot Detection System, Blind Spot Detection System, Spot Detection System, Detection System, System

References

- User Manual

Manuals+, Privacy Policy

This website is an independent publication and is neither affiliated with nor endorsed by any of the trademark owners. The "Bluetooth®" word mark and logos are registered trademarks owned by Bluetooth SIG, Inc. The "Wi-Fi®" word mark and logos are registered trademarks owned by the Wi-Fi Alliance. Any use of these marks on this website does not imply any affiliation with or endorsement.