Saved from manuals.plus.
Open the live page for links to other documents and user manuals.

Garvee dsfsfgsgfnjfmn

Garvee RV Steps: Heavy-Duty 2-Step with Handrails Instruction Manual

Introduction

Thank you for choosing the Garvee Heavy-Duty 2-Step RV Steps with Handrails. This product is designed to provide a stable and secure entry and exit solution for various applications, including RVs, campers, hot tubs, pools, and porches. Constructed from heavy-duty carbon steel with non-slip mats and reinforced handrails, these steps offer enhanced safety and accessibility for all users, including seniors, children, and those with mobility considerations. Please read this manual thoroughly before assembly and use to ensure proper installation and safe operation.



Image: A child and a dog demonstrating the safe use of the Garvee RV steps to enter a recreational vehicle.

Safety Information

- **Weight Capacity:** The Garvee RV Steps are designed to support a maximum weight of 400 lbs (approximately 181 kg). Do not exceed this weight limit.
- **Secure Placement:** Always ensure the steps are placed on a stable, level surface before use. Uneven ground can compromise stability.
- **Handrail Use:** Always use the handrails for support when ascending or descending the steps.
- **Non-Slip Mats:** The steps are equipped with non-slip mats. Keep these mats clean and free from debris, ice, or water to maintain maximum traction.
- **Regular Inspection:** Periodically inspect all screws, bolts, and structural components for tightness and signs of wear or damage. Tighten any loose fasteners immediately. Do not use the steps if any part is damaged or appears unstable.
- **Children and Pets:** Supervise children and pets when they are using or near the steps.
- **Weather Conditions:** Exercise caution when using the steps in wet, icy, or windy conditions.

Package Contents

Before beginning assembly, please verify that all components listed below are present and undamaged. If any parts are missing or damaged, please contact customer support.

- 2-Step Base Unit
- 2 Handrails
- Non-Slip Mats (pre-installed on steps)
- Assembly Hardware (screws, bolts, washers, nuts)
- Instruction Manual



Image: A fully assembled Garvee 2-step RV steps unit with handrails, showcasing the complete product.

Setup and Assembly

Assembly of the Garvee RV Steps is straightforward and typically takes about 30 minutes with one person. No special tools are required beyond standard household tools (e.g., a wrench or screwdriver for tightening screws).

1. **Step 1: Assemble the Step Base.** Connect the two step platforms and their supporting frames using the provided hardware. Ensure all connections are secure but do not fully tighten yet.
2. **Step 2: Secure the Step Base.** Once the step platforms are aligned, fully tighten all screws and bolts

connecting the step base components.

3. **Step 3: Attach Handrail Posts.** Insert the vertical posts for the handrails into the designated slots on the step base. Secure them with the appropriate hardware.
4. **Step 4: Install Handrails.** Attach the top handrail bars to the vertical posts. Ensure all handrail connections are firmly tightened to provide maximum stability.

After assembly, double-check all fasteners to ensure they are securely tightened. This is crucial for the stability and safety of the steps.

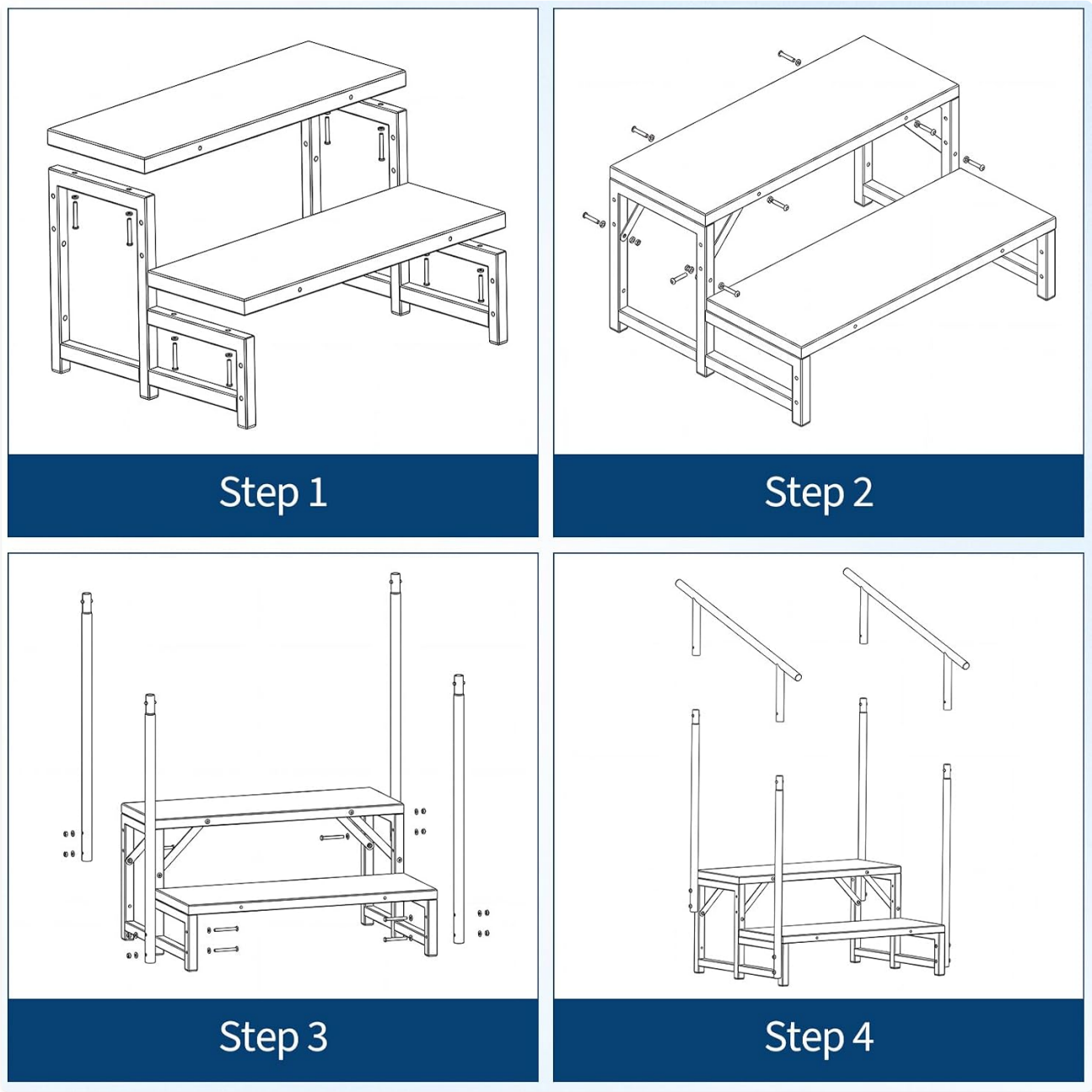

Image: A visual guide illustrating the four main steps for assembling the Garvee RV steps.

Operating Instructions

The Garvee RV Steps are designed for versatile use across various environments, offering enhanced accessibility and safety.

- **RV and Camper Access:** Position the steps firmly against your RV or camper entrance. The handrails provide crucial support for safe entry and exit.
- **Hot Tub and Pool Access:** Use the steps to safely enter and exit hot tubs or above-ground pools. Ensure the

steps are stable on the ground and not submerged.

- **Porch and Mobile Home Entry:** Ideal for providing a stable transition to elevated porches or mobile home entrances.
- **General Utility:** Can be used as a portable ladder for tasks such as loading/unloading from car trunks, reaching high shelves, or during home renovation activities like wall painting.

The ergonomic design and handrails make these steps particularly beneficial for individuals with knee injuries, mobility challenges, or balance concerns, as well as for children and pets.



Image: A collage demonstrating the multi-purpose utility of the Garvee steps in different settings, including commercial and home use.



Image: The Garvee steps positioned next to an inflatable pool, allowing children safe and easy access for play.



Image: The Garvee steps providing a convenient and safe entry point to a residential porch.

Maintenance

Proper maintenance will ensure the longevity and continued safe operation of your Garvee RV Steps.

- **Cleaning:** Wipe down the steps and handrails with a damp cloth and mild detergent as needed. Avoid abrasive cleaners that could damage the powder coating.
- **Non-Slip Mats:** Keep the non-slip mats clean. If they become excessively worn or damaged, they may need replacement to maintain traction.
- **Rust Prevention:** The steps feature an anti-rust powder coating. To maintain this protection, avoid scratching or chipping the coating. If damage occurs, touch up with rust-inhibiting paint.
- **Fastener Check:** Regularly check all screws and bolts for tightness. Vibrations during transport or heavy use can cause fasteners to loosen over time.
- **Storage:** When not in use for extended periods, store the steps in a dry, protected area to prevent exposure to harsh weather conditions.



Image: Detailed view of the Garvee steps, emphasizing the anti-slip mat, anti-rust powder coating, and the robust construction of the handrails and frame.

Troubleshooting

- **Steps feel wobbly after assembly:** Ensure all screws and bolts are fully tightened. Re-check each connection point.
- **Steps slide on certain surfaces:** Always place the steps on a stable, non-slippery surface. If using on very smooth surfaces, consider adding additional rubber feet or a non-slip mat underneath the base.
- **Handrails feel loose:** Tighten the screws securing the handrail posts to the step base and the handrail bars to the posts.
- **Rust spots appear:** Clean the area thoroughly, sand lightly if necessary, and apply a rust-inhibiting paint to prevent further corrosion.

If you encounter issues not covered here or require further assistance, please contact Garvee customer support.

Specifications

Feature	Specification
Brand	Garvee
Model Number	dsfsfgsgfnjfmn
Material	Heavy-gauge alloy steel with powder coating
Number of Steps	2
Item Weight	22.9 pounds (approx. 10.39 kg)
Weight Capacity	400 lbs (approx. 181 kg)
UPC	881206419052
Color	Straight Handrail (Black)
Overall Dimensions (Approx.)	29.13in (L) x 20.47in (W) x 43.89in (H)
Step Height (Bottom)	7.08in
Step Height (Top)	14.17in
Distance Between Steps	10.23in



Image: A detailed diagram illustrating the key dimensions of the Garvee RV steps, including height, width, and step spacing.

Warranty and Support

The Garvee RV Steps come with a**30-day manufacturer's warranty** from the date of purchase, covering defects in materials and workmanship under normal use. This warranty does not cover damage resulting from misuse, accidents, unauthorized modifications, or improper assembly.

For warranty claims, technical support, or any questions regarding your Garvee RV Steps, please contact Garvee customer service through the retailer's platform or the official Garvee website. Please have your purchase receipt and model number (dsfsfgsgfnjfmn) available when contacting support.

Ask a question about this manual

Ask about setup, troubleshooting, compatibility, parts, safety, or missing instructions. Manuals+ will review the question and use this page’s manual context to help answer it.

Name

Anonymous

Email

you@example.com

After a successful submission, we securely hash the supplied account or form email before sending it to Microsoft Advertising for conversion attribution. Privacy details.

Question

Example: How do I reset this device or fix this error?

Details

Model number, symptoms, what you tried, or the section of the manual you are using.

Submit question

Open the live page

https://manuals.plus/asin/B0H44FBD9G

More documents and user manuals: **https://manuals.plus/**