Saved from manuals.plus.
Open the live page for links to other documents and user manuals.

Garvee 439-UR42LFUHXZOBD-B-HI9o

Garvee 71-inch Double Dog Crate Furniture Instruction Manual

Model: 439-UR42LFUHXZOBD-B-HI9o

1. Introduction

Thank you for choosing the Garvee 71-inch Double Dog Crate Furniture. This versatile product serves as a comfortable indoor kennel for your pets, a functional TV stand, and a storage console. Designed with both pet comfort and home aesthetics in mind, it features a removable divider for flexible space configuration and integrated storage drawers.

This manual provides essential information for the safe assembly, operation, and maintenance of your new dog crate furniture. Please read it thoroughly before beginning assembly and retain it for future reference.



Image 1.1: The Garvee 71-inch Double Dog Crate Furniture, showcasing its 3-in-1 functionality as a dog cage, storage table, and TV stand.

2. Safety Information

To ensure safe use and prevent injury or damage, please adhere to the following safety guidelines:

- This product is designed for **indoor use only**. Do not use outdoors or in damp environments.
- Before purchasing, accurately measure your dog's length and height to ensure a comfortable and appropriate fit

within the crate. Allow at least 4 inches more than your dog's measured length and height for activity space.

- Keep all small parts and packaging materials away from children and pets during assembly to prevent choking hazards.
- Ensure all screws, bolts, and fasteners are tightened securely before use. Periodically check and re-tighten as necessary.
- Do not overload the top surface of the furniture. Refer to the specifications for weight capacity.
- Do not allow children to climb on or play inside the crate.
- Place the furniture on a flat, stable, and level surface to prevent tipping.

3. Setup and Assembly

Your Garvee dog crate furniture is designed for straightforward assembly. It may be shipped in two separate packages that could arrive at slightly different times. Please ensure you have received all packages and components before starting.

3.1 Package Contents

Refer to the included parts list and hardware pack for a complete inventory of all components. Verify that all parts are present and undamaged before proceeding.

3.2 Assembly Steps

1. Unpack all components and lay them out on a clean, soft surface to prevent scratches.
2. Identify each part using the provided assembly diagram.
3. Follow the step-by-step instructions in the separate assembly manual provided with your product. Use only the hardware supplied.
4. Ensure all connections are firm and secure. Do not overtighten screws.

PRODUCT SIZE

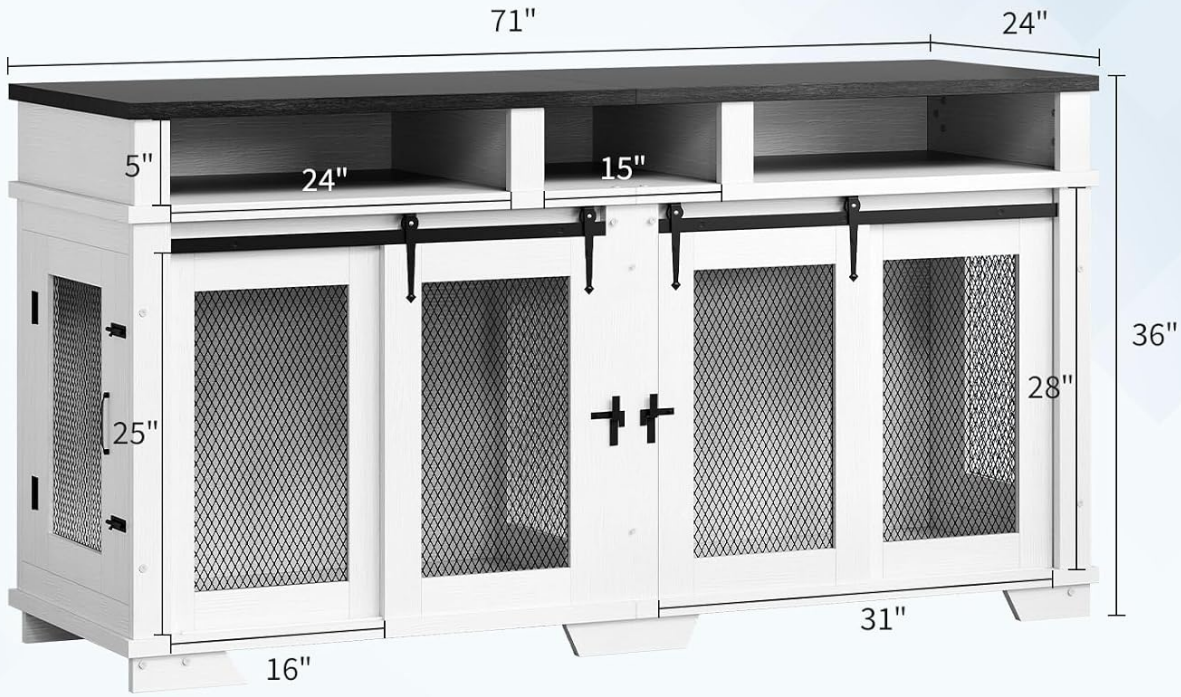

HOW TO MEASURE YOURDOGS?

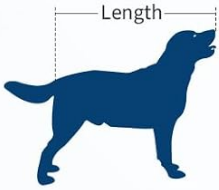

Step1:Length

Measure the length from nose to tail by keeping your dog in normal standing



Step2:Height

Measure the distance from dog's ears or head to its paws in normal sitting as the height

Warm Tips: Reserve 4" more than the measured length and height for the dogs' activity space

Image 3.1: Diagram illustrating the overall product dimensions (71"L x 24"W x 36"H) and a guide on how to accurately measure your dog's length and height for proper crate sizing.





Solid Tabletop

Convenient for Push & Pull





Low Noise & High Flexibility

Image 3.2: Detailed view of the sliding barn door mechanism and the reinforced base, highlighting the space-saving design and added stability.

4. Operating Instructions

4.1 Removable Divider

The crate includes a removable physical divider, allowing for flexible space configuration:

- **For two dogs:** Keep the divider in place to create two separate, private compartments for two medium or small dogs.
- **For one large dog:** Remove the divider to create a single, spacious area for one large dog.

To remove or install the divider, follow the specific instructions in your assembly manual. Ensure it is securely fastened when in use.

4.2 Sliding Barn Doors

The crate features sliding barn doors for easy access and secure closure. To open or close a door, gently slide it along its track. The doors are equipped with secure latches to prevent accidental opening by your pet.



Image 4.1: A golden retriever entering the crate through one of the dual-access sliding barn doors, demonstrating the ease of entry and exit.

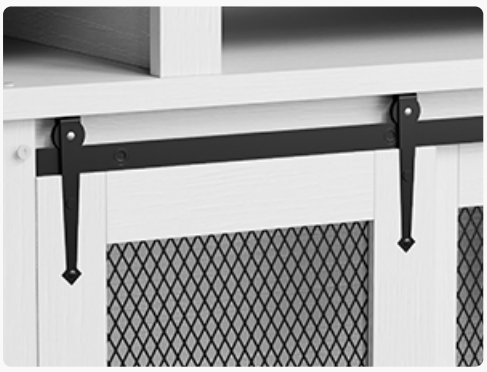

Image 4.2: A close-up view of the sliding barn door mechanism, highlighting the smooth operation and secure design.

4.3 Storage Drawers

The top section of the furniture includes practical sliding storage drawers. These are ideal for organizing pet supplies such as food, leashes, toys, and pee pads. Gently pull the drawers open and push them closed. Avoid forcing them.



Image 4.3: An overhead view of the crate's top surface, showing various pet supplies neatly organized in the integrated storage areas.

5. Maintenance

Regular maintenance will help prolong the life and appearance of your Garvee dog crate furniture.

- **Cleaning:** Wipe surfaces with a soft, damp cloth. Avoid harsh chemicals or abrasive cleaners, which can damage the finish. For stubborn stains, use a mild soap solution and dry immediately.
- **Hardware Check:** Periodically inspect all screws, bolts, and connections to ensure they remain tight. Re-tighten as needed to maintain structural integrity.
- **Metal Grids:** Clean the metal wire grids with a damp cloth. Ensure they are free from rust or damage.
- **Sliding Tracks:** Keep the sliding door tracks clean and free of debris to ensure smooth operation. A small amount of silicone lubricant can be applied if doors become stiff.



Image 5.1: A close-up detail of the tabletop surface, illustrating its smooth finish which is easy to clean and maintain.

6. Troubleshooting

If you encounter any issues with your Garvee dog crate furniture, please refer to the following common problems and solutions:

- **Doors are stiff or not sliding smoothly:**
  - Check the sliding tracks for any debris or obstructions. Clean thoroughly.
  - Ensure the furniture is placed on a level surface. Uneven surfaces can cause misalignment.
  - Apply a small amount of silicone-based lubricant to the tracks.
- **Divider does not fit or is loose:**
  - Re-check the assembly instructions for the divider installation. Ensure it is oriented correctly.
  - Verify that all fasteners securing the divider are tightened.
- **Furniture feels unstable or wobbly:**
  - Ensure all assembly screws and bolts are fully tightened.
  - Confirm the furniture is on a flat and level floor. Use furniture levelers if necessary.
- **Missing parts or damaged components:**
  - Contact Garvee customer support immediately with your purchase details and a description of the issue.

7. Specifications

Feature	Detail
Brand	Garvee
Model Number	439-UR42LFUHXZOBD-B-HI9o
Product Dimensions (L x W x H)	70.87" x 35.43" x 23.62"
Item Weight	149.8 Pounds
Material	High-density engineered wood, Heavy-duty metal frame
Color	White
Specific Uses	Indoor
Divider	Removable

Feature	Detail
Storage	Integrated sliding drawers



Image 7.1: Illustration of the heavy-duty construction, featuring chew-proof metal grids and thick engineered wood boards for durability and security.

8. Warranty Information

For detailed warranty information regarding your Garvee 71-inch Double Dog Crate Furniture, please refer to the manufacturer's official website or contact Garvee customer support directly. Warranty terms and conditions may vary.

9. Customer Support

If you have any questions, require assistance with assembly, or need to report missing/damaged parts, please contact Garvee customer support. Have your model number and purchase details ready for faster service.

You can visit the official Garvee Store for more information and support resources: Garvee Store on Amazon

© 2026 Garvee. All rights reserved.

Ask a question about this manual

Ask about setup, troubleshooting, compatibility, parts, safety, or missing instructions. Manuals+ will review the question and use this page's manual context to help answer it.

Name

Anonymous

Email

you@example.com

After a successful submission, we securely hash the supplied account or form email before sending it to Microsoft Advertising for conversion attribution. Privacy details.

Question

Example: How do I reset this device or fix this error?

Details

Model number, symptoms, what you tried, or the section of the manual you are using.

Submit question

Open the live page

https://manuals.plus/asin/B0GTVRQJX6

More documents and user manuals: **https://manuals.plus/**