Saved from manuals.plus.
Open the live page for links to other documents and user manuals.

Garvee hwqa-IKu8UyHUZyE-t1uMQCLJb0

Garvee Plow Scarifier Implement User Manual

Model: hwqa-IKu8UyHUZyE-t1uMQCLJb0

1. Product Overview

The Garvee Plow Scarifier Implement is a robust attachment designed for soil preparation in gardens and farmlands. It features 6 removable and height-adjustable scarifier shanks, providing a 48-inch working width. Constructed from premium carbon steel, this implement is compatible with CAT-0 and CAT-1 tractors, ATVs, and UTVs, facilitating efficient loosening and lifting of soil for subsequent planting.



Image: The Garvee Plow Scarifier Implement shown attached to a blue tractor, actively tilling soil in a field.

2. Safety Information

Always prioritize safety when operating agricultural equipment. Adhere to the following guidelines:

- Wear appropriate protective clothing, including gloves and safety glasses, to prevent injury.
- Be aware of all moving parts and ensure hands and feet are kept clear during operation.
- Verify that the implement is securely attached to the tractor or vehicle before commencing any work.
- Do not operate the equipment if you are fatigued or under the influence of drugs or alcohol.

- Always turn off the tractor and allow all moving parts to come to a complete stop before dismounting, making adjustments, or performing maintenance.
- Maintain a safe distance for bystanders from the operating area.

3. Setup and Assembly

The Garvee Plow Scarifier Implement is designed for straightforward attachment to CAT-0 and CAT-1 tractors, ATVs, or UTVs. Ensure all components are present and undamaged before assembly.

1. **Unpack Components:** Carefully remove all parts from the packaging and lay them out on a clean, flat surface.
2. **Attach Main Frame:** Secure the main frame of the scarifier to your vehicle's 3-point hitch system using appropriate pins and fasteners. Ensure a tight and stable connection.
3. **Install Scarifier Shanks:** Insert the 6 scarifier shanks into their designated slots on the main frame. Secure each shank with the provided pins and clips.
4. **Adjust Shank Height:** The shanks are height-adjustable. Use the adjustment mechanisms to set the desired working depth. Ensure all shanks are set to a uniform depth for even soil cultivation.
5. **Final Inspection:** Double-check all connections, pins, and adjustments to ensure they are secure before initial operation.



Image: Detailed views illustrating the adjustable components of the scarifier, highlighting how shanks can be positioned for different depths and angles.

4. Operating Instructions

The Garvee Plow Scarifier is designed to efficiently break up hard ground and prepare soil for planting. Follow these steps for optimal performance:

1. **Vehicle Preparation:** Ensure your CAT-0 or CAT-1 tractor, ATV, or UTV is in good working condition and capable of handling the implement's weight and resistance.
2. **Depth Setting:** Adjust the scarifier shanks to the desired cultivation depth. For initial soil preparation, a deeper setting may be required.

3. **Engage Implement:** Slowly lower the scarifier into the soil. Begin moving forward at a consistent, appropriate speed for your vehicle and soil conditions. Avoid excessive speed, which can damage the implement or lead to uneven tilling.
4. **Monitor Performance:** Observe the scarifier's operation. The wide path coverage (48 inches) is designed to reduce working time and provide a uniform loosening effect.
5. **Overlap Passes:** For thorough cultivation, slightly overlap each pass to ensure no areas are missed.
6. **Disengage:** When finished, slowly raise the implement from the ground before stopping or turning sharply.



Image: The scarifier implement in action, demonstrating its 48-inch working width as it prepares a wide strip of ground.

5. Maintenance

Regular maintenance ensures the longevity and optimal performance of your Garvee Plow Scarifier Implement.

- **Cleaning:** After each use, remove any accumulated soil, debris, or plant matter from the shanks and frame. A stiff brush or pressure washer can be used.
- **Inspection:** Periodically inspect all bolts, pins, and connections for tightness. Tighten any loose fasteners. Check shanks for wear, bending, or damage. Replace worn or damaged parts promptly.
- **Lubrication:** Apply a light coat of rust-preventative oil to any exposed metal parts, especially before long-term storage, to prevent corrosion.
- **Storage:** Store the implement in a dry, covered area to protect it from weather elements.

6. Troubleshooting

If you encounter issues during operation, consider the following common problems and solutions:

- **Uneven Tilling Depth:**
  Possible Cause: Shanks are not set to a uniform height or ground is uneven.
  Solution: Re-adjust shank heights to ensure consistency. Drive slower over very uneven terrain.
- **Implement Not Penetrating Soil:**
  Possible Cause: Shanks are set too shallow, or soil is extremely hard.
  Solution: Increase shank depth. For very hard soil, consider making multiple passes, gradually increasing depth, or pre-wetting the area if feasible.
- **Excessive Vibration or Noise:**
  Possible Cause: Loose connections or damaged shanks.
  Solution: Stop operation immediately. Inspect all bolts, pins, and shanks for looseness or damage. Tighten or replace as necessary.
- **Difficulty Attaching/Detaching:**
  Possible Cause: Misalignment or bent pins.
  Solution: Ensure the vehicle's hitch is properly aligned with the implement. Check pins for straightness and replace if bent.

7. Specifications

Key specifications for the Garvee Plow Scarifier Implement:

Feature	Detail
Brand	Garvee
Model Number	hwqa-IKu8UyHUZyE-t1uMQCLJb0
Product Dimensions (D x W x H)	49.41" x 19.49" x 8.46"
Working Width	48 inches
Material	Carbon Steel
Item Weight	116.62 Pounds
Compatibility	CAT-0 & CAT-1 ATV/UTV
Number of Shanks	6

Operation Mode	Hydraulic (via tractor's 3-point hitch)

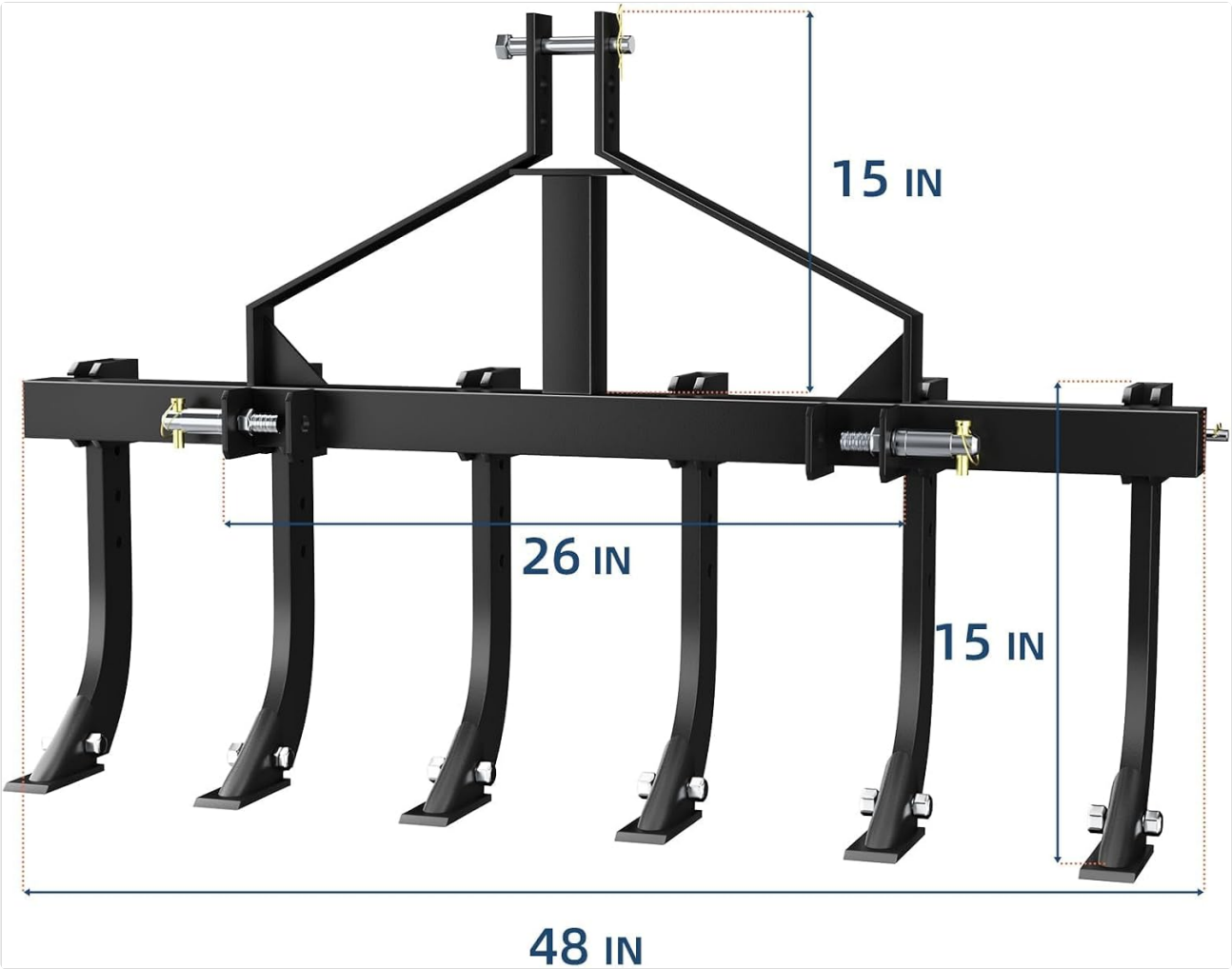

Image: A technical drawing illustrating the key dimensions of the scarifier implement, including its overall length, width, and shank height.

8. Warranty and Support

For product support, technical assistance, or inquiries regarding your Garvee Plow Scarifier Implement, please refer to the retailer's customer service channels. This product is subject to the retailer's return policy, which typically allows for returns within 30 days of purchase. Please retain your proof of purchase for any warranty or support claims.

© 2024 Garvee. All rights reserved.

Ask a question about this manual

Ask about setup, troubleshooting, compatibility, parts, safety, or missing instructions. Manuals+ will review the question and use this page's manual context to help answer it.

Name

Anonymous

Email

you@example.com

After a successful submission, we securely hash the supplied account or form email before sending it to Microsoft Advertising for conversion attribution. Privacy details.

Question

Example: How do I reset this device or fix this error?

Details

Model number, symptoms, what you tried, or the section of the manual you are using.

Submit question

Open the live page

https://manuals.plus/asin/B0G4PBQ7RH

More documents and user manuals: **https://manuals.plus/**