Saved from manuals.plus.
Open the live page for links to other documents and user manuals.

NARVI NANTES 50cm

NARVI NANTES 50cm Ceiling Fan User Manual

Model: NANTES 50cm

1. Product Overview

The NARVI NANTES 50cm Ceiling Fan is designed to provide efficient air circulation and adjustable lighting for your living space. It features a quiet and energy-efficient DC motor, integrated LED lighting with adjustable color temperature, and convenient remote control operation. The fan also includes a winter/summer function for year-round comfort and retractable transparent blades for a sleek, modern aesthetic.

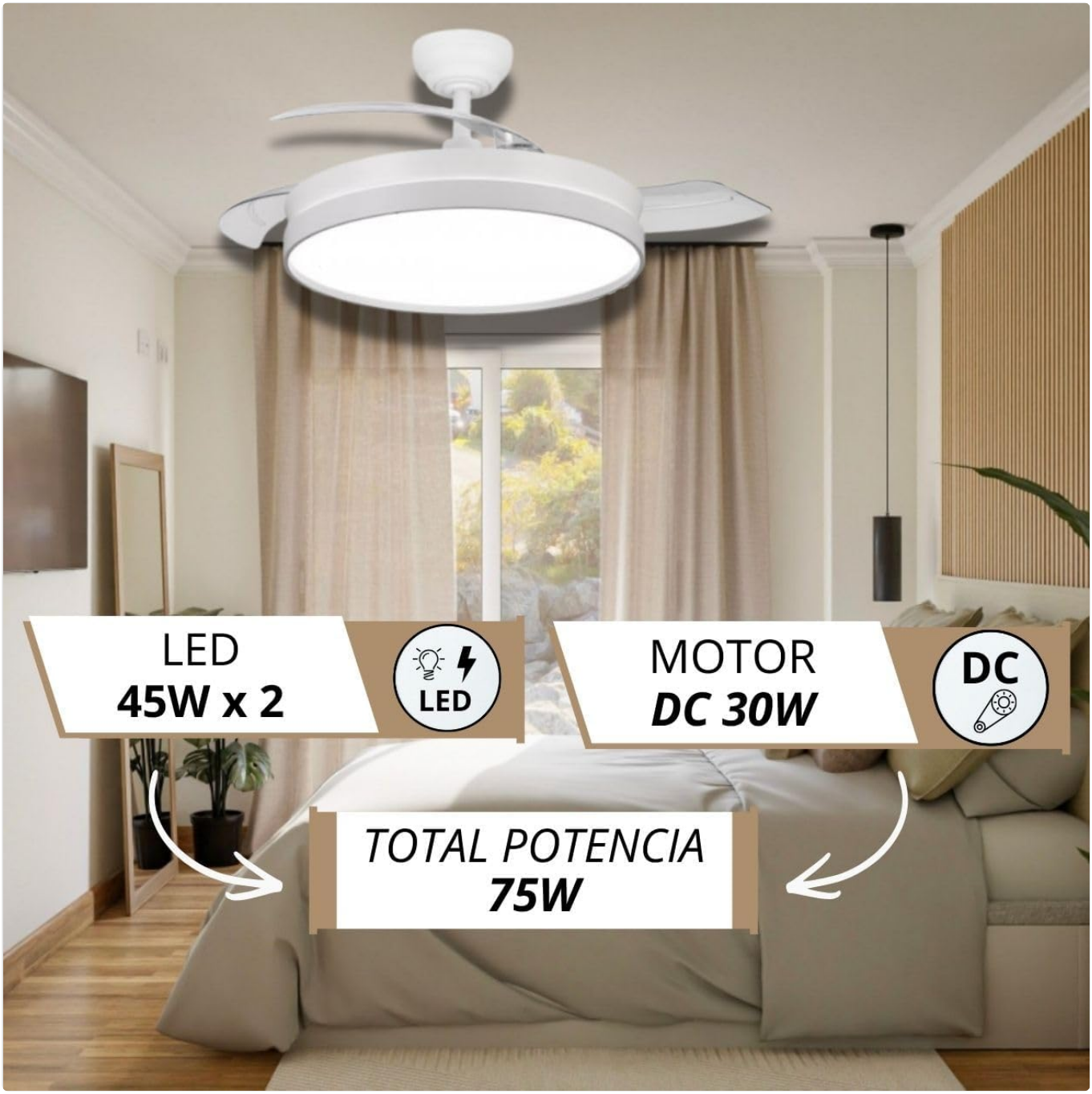

Image 1.1: The NARVI NANTES 50cm Ceiling Fan, showcasing its design with blades extended in a room setting.

2. Safety Instructions

Please read all safety instructions carefully before installation and use. Failure to follow these instructions may result in electric shock, fire, or personal injury.

- Ensure the main power supply is disconnected before installation, maintenance, or cleaning.
- Installation must be performed by a qualified electrician in accordance with local electrical codes.
- The mounting structure must be capable of supporting the weight of the fan (approximately 5.9 kg).
- Do not insert objects into the fan blades while the fan is operating.
- Keep children and pets away from the fan during operation.
- Do not use the fan in damp or wet locations.
- Use only the remote control provided with the fan.
- Regularly check all connections and mounting hardware for tightness.

3. Package Contents

Verify that all components are present and undamaged before proceeding with installation.

- Ceiling Fan Unit (with integrated LED light and retractable blades)
- Remote Control
- Mounting Bracket
- Downrods (10cm and 20cm options)
- Hardware Pack (screws, wire nuts, washers)
- User Manual

4. Installation Guide

Follow these steps for proper installation. Professional installation is recommended.

4.1. Preparation

1. Turn off power at the circuit breaker.
2. Ensure the mounting location can support the fan's weight and allows for at least 2.3 meters (7.5 feet) clearance from the floor to the blades.

4.2. Mounting the Bracket

3. Secure the mounting bracket to the ceiling junction box using the provided screws. Ensure it is firmly attached.

4.3. Assembling the Fan

4. Attach the chosen downrod (10cm or 20cm) to the fan motor assembly.
5. Carefully lift the fan assembly and hang it from the mounting bracket.

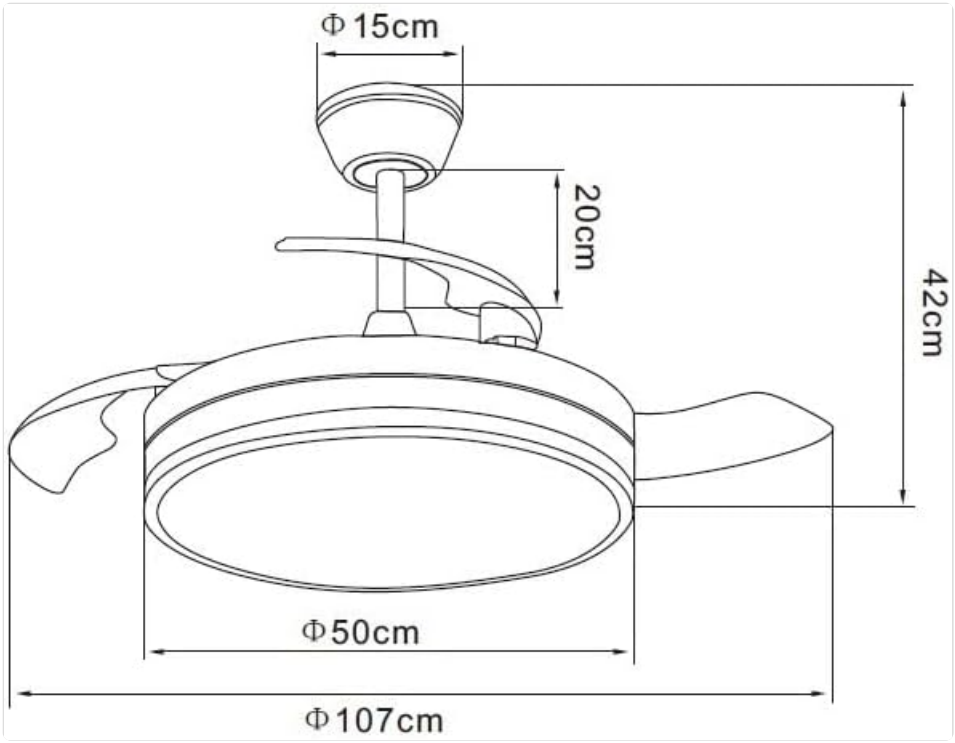

Image 4.1: Dimensional diagram of the fan, illustrating the 50cm diameter and height options with different downrods.

4.4. Electrical Connection

6. Connect the fan's electrical wires to the household wiring according to the wiring diagram in the full manual. Ensure all

connections are secure with wire nuts.

7. Place the remote control receiver inside the canopy.

4.5. Final Assembly

8. Secure the canopy to the mounting bracket, covering the wiring.
9. Ensure all screws are tightened and the fan is stable.
10. Restore power at the circuit breaker.

5. Operating Instructions

The NARVI NANTES ceiling fan is operated using the included remote control.

5.1. Remote Control Functions



Image 5.1: The remote control for operating the fan and light functions.

- **Power On/Off:** Press the power button to turn the fan and light on or off.
- **Fan Speed:** Use the speed buttons (1-6) to adjust the fan's rotation speed. The fan offers up to 6 speeds.
- **Light On/Off:** Press the light button to turn the LED light on or off independently.
- **Light Color Temperature:** Cycle through 3 different color temperatures (warm white, neutral white, cool white) by pressing the light color button.
- **Light Dimming:** Adjust the brightness of the LED light by holding down the light dimming buttons.
- **Timer Function:** Set the fan to turn off automatically after 2, 4, or 8 hours using the timer buttons.
- **Winter/Summer Mode:** Press the mode button to switch between summer mode (downward airflow for cooling) and winter mode (upward airflow for heat distribution).
- **Memory Function:** The fan remembers your last light and speed settings when turned off and on again.



Image 5.2: Key operational features including memory, timer, speeds, and retractable blades.



Image 5.3: Visual representation of the fan's winter and summer modes for optimal air circulation.

6. Maintenance

Regular maintenance ensures optimal performance and longevity of your ceiling fan.

- **Cleaning:** Turn off power before cleaning. Use a soft, damp cloth to wipe down the fan housing and blades. Do not use

abrasive cleaners or solvents.

- **Blade Inspection:** Periodically check the fan blades for any cracks or damage.
- **Tightness Check:** Ensure all screws and connections are tight at least twice a year. Loose connections can cause noise or malfunction.
- **Light Source:** The LED light source is integrated and not user-replaceable. Contact customer support if the light malfunctions.

7. Troubleshooting

Refer to the table below for common issues and their solutions.

Problem	Possible Cause	Solution
Fan does not start	No power; Loose wiring; Remote control battery dead.	Check circuit breaker; Verify wiring connections; Replace remote control battery.
Light does not work	No power; Loose wiring; LED module failure.	Check circuit breaker; Verify wiring connections; Contact customer support.
Fan makes excessive noise	Loose mounting screws; Unbalanced blades; Motor issue.	Tighten all mounting screws; Ensure blades are properly installed; Contact customer support.
Remote control not working	Dead battery; Remote not paired; Obstruction.	Replace battery; Refer to pairing instructions (if applicable); Ensure clear line of sight to receiver.

8. Technical Specifications

Brand	NARVI
Model	NANTES 50cm
Color	Nantes (White)
Product Dimensions	107cm (diameter with blades extended) x 37cm (height with 10cm downrod)
Product Weight	5.9 kg
Motor Type	DC Motor
Motor Power	≤ 30 Watts
LED Light Power	45 Watts
Light Color Temperature	Adjustable (3000K-6500K)
Number of Blades	3 (Transparent, Retractable)
Fan Speeds	6
Special Features	Remote Control, Adjustable Height (via downrods), Winter/Summer Function, Memory Function, Timer (2H-4H-8H)
Recommended Room Size	13-20 m²
Protection Rating	IP20
Power Source	Corded Electric
Mounting Type	Ceiling Mount



Image 8.1: Key technical features and compatibility information.

9. Warranty and Customer Support

NARVI products are manufactured to high-quality standards. This product comes with a standard manufacturer's warranty. For specific warranty details, please refer to the warranty card included in your package or contact NARVI customer support.
If you encounter any issues or have questions regarding your NARVI NANTES ceiling fan, please contact our customer support team.

- **Online Support:** Visit the official NARVI website for FAQs and support resources.
- **Email Support:** Refer to your product packaging or warranty card for contact email.
- **Phone Support:** Refer to your product packaging or warranty card for contact number.

Ask a question about this manual

Ask about setup, troubleshooting, compatibility, parts, safety, or missing instructions. Manuals+ will review the

question and use this page's manual context to help answer it.

Name

Anonymous

Email

you@example.com

After a successful submission, we securely hash the supplied account or form email before sending it to Microsoft Advertising for conversion attribution. Privacy details.

Question

Example: How do I reset this device or fix this error?

Details

Model number, symptoms, what you tried, or the section of the manual you are using.

Submit question

Open the live page

https://manuals.plus/asin/B0FQR4K4ND

More documents and user manuals: **https://manuals.plus/**