Saved from manuals.plus.
Open the live page for links to other documents and user manuals.

Garvee WHXAL-PHO_0XYKXH95JYIQX6U

Garvee Non-Electric Round Bidet Toilet Seat User Manual

Model: WHXAL-PHO_0XYKXH95JYIQX6U | Brand: Garvee

1. Introduction

Thank you for choosing the Garvee Non-Electric Round Bidet Toilet Seat. This manual provides essential information for the safe and efficient installation, operation, and maintenance of your new bidet seat. Designed for personal hygiene and comfort, this bidet features dual self-cleaning nozzles, adjustable spray pressure and position, and a slow-close lid for convenience.

Key features include:

- **Self-Sanitizing Dual Nozzles:** Enhanced cleanliness with nozzles that automatically rinse before and after each use.
- **Adjustable Water Pressure:** Customize your cleansing experience with easily adjustable spray strength.
- **Precise Nozzle Positioning:** Simple control system for targeted cleaning.
- **Non-Electric Operation:** Functions solely on water pressure, requiring no electricity or complex wiring.
- **Soft-Close Lid Feature:** Prevents loud slams and accidental damage with a quiet-close design.

2. Safety Information

- Read all instructions carefully before installation and use.
- Ensure all connections are tight to prevent leaks. Do not overtighten.
- Use only cold water supply for this non-electric bidet.
- Do not use abrasive cleaners or harsh chemicals on the bidet seat.
- If you are unsure about any installation steps, consult a qualified plumber.

3. Package Contents

Verify that all components are present before beginning installation:

- Garvee Non-Electric Round Bidet Toilet Seat
- T-Adapter for water connection
- Flexible Water Hose
- Mounting Bolts and Washers
- Mounting Panel



Figure 3.1: The complete package contents are displayed, showing the bidet toilet seat, the T-adapter for water connection, the flexible water hose, and all necessary installation bolts and washers.

4. Product Dimensions

Ensure your toilet is compatible with the bidet seat dimensions. This model is designed for round toilets.

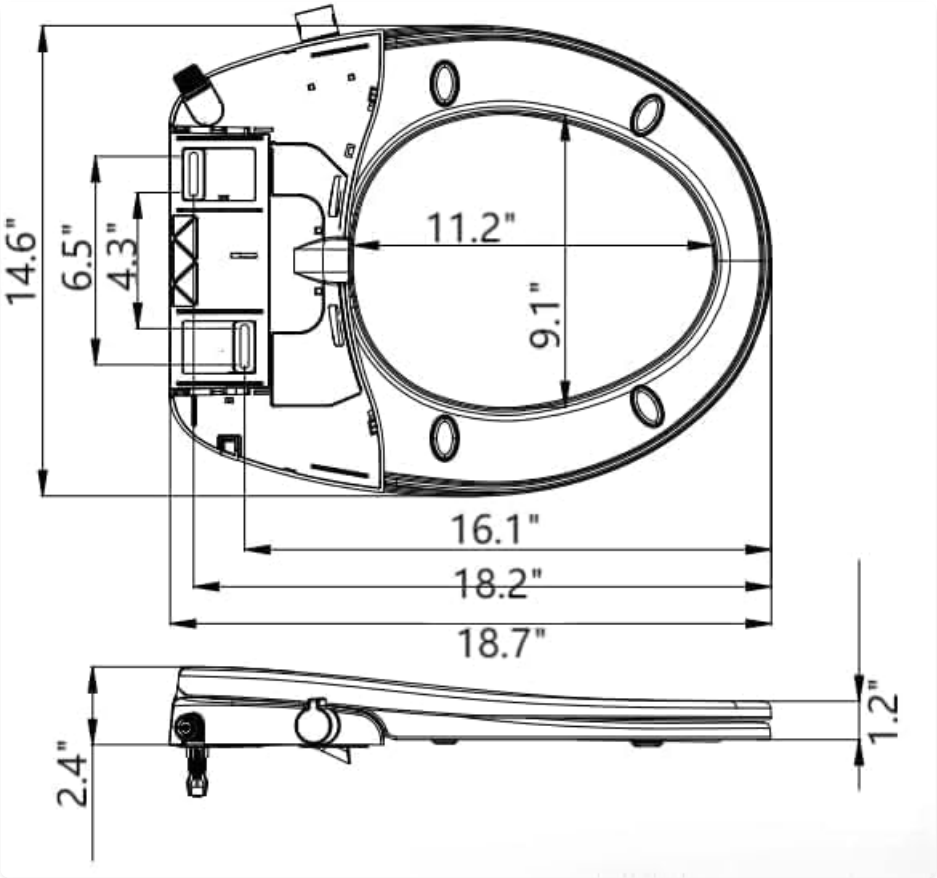

Figure 4.1: This diagram illustrates the key dimensions of the bidet toilet seat, including length, width, and height, to ensure proper fit with your toilet.

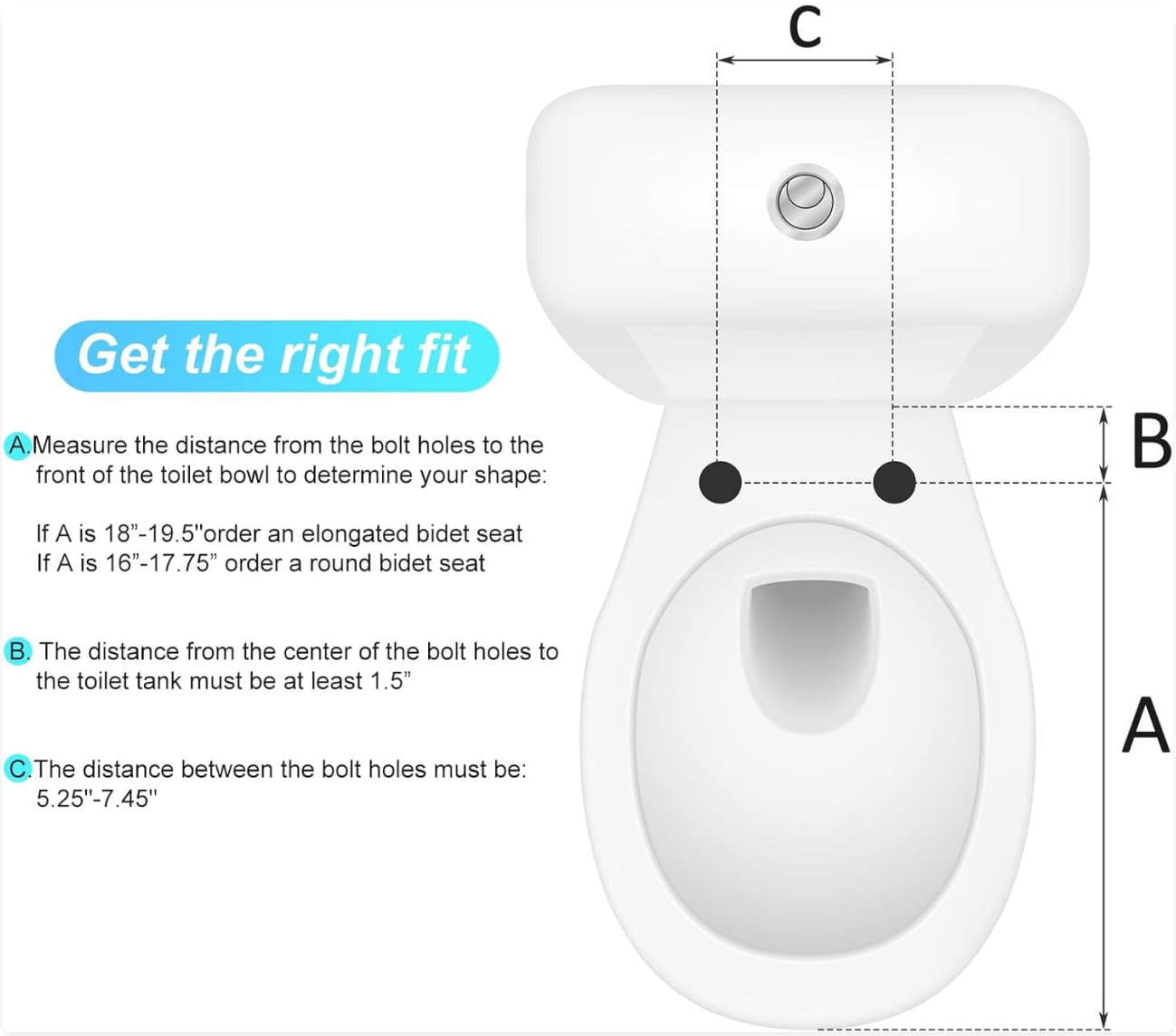

Figure 4.2: This guide provides instructions on how to measure your toilet to determine if it is round or elongated and to ensure the bidet seat will fit correctly. Measure distance from bolt holes to front (A), distance from bolt holes to tank (B), and distance between bolt holes (C).

5. Installation

This bidet seat is designed for easy, non-electric installation. Follow these steps carefully.

5.1 Pre-Installation Checks

1. Turn off the water supply to your toilet at the shutoff valve.
2. Flush the toilet to empty the tank.
3. Remove your existing toilet seat by unscrewing the bolts.

5.2 Installing the Bidet Seat

1. Place the mounting panel over the toilet's fixing holes.
2. Insert the included toilet bolts and metal washers into the fixing holes.
3. From beneath the toilet, add washers and nuts, then tighten to secure the mounting panel. Do not fully tighten yet for adjustment.
4. Slide the bidet toilet seat onto the mounting panel until it locks into place. Adjust the seat's position for optimal fit, then fully tighten the bolts.

5.3 Connecting the Water Supply

1. Unscrew the existing supply hose from the toilet tank inlet.
2. Place the washer into the T-adapter.
3. Attach the T-adapter to the toilet tank inlet.
4. Connect the original hose to the bottom of the T-adapter.
5. Connect the included bidet hose from the T-adapter to the bidet seat's water inlet.
6. Slowly turn the main water supply back on and check for leaks.

▶ **Watch video online**
Clirass Bidet Toilet Seat Easy Installation & Features Guide

Video 5.1: This video provides a comprehensive guide to the easy installation and features of a bidet toilet seat, demonstrating each step clearly.

▶ **Watch video online**
How To Install ANNWA Non-Electric Elongated Bidet Seat

Video 5.2: This video demonstrates the step-by-step installation process for a non-electric bidet seat, covering all necessary connections and adjustments.

6. Operating Instructions

Your Garvee bidet seat is simple to operate using the side control knob.



Figure 6.1: A detailed view of the bidet's control panel, indicating the cold water inlet, the main control knob for adjusting spray pressure and selecting wash modes (buttock washing and women washing).

6.1 Selecting Wash Mode and Adjusting Pressure

1. Sit on the bidet seat. The nozzles will not activate unless pressure is applied to the seat.
2. Rotate the control knob to select your desired wash mode:
    - Turn towards 'Buttock Washing' for a rear wash.
    - Turn towards 'Women Washing' for a feminine wash.
3. Continue rotating the knob in the selected direction to increase water pressure. Rotate back towards the center to decrease pressure or turn off.

▶ **Watch video online**
How To Use ANNWA Toilet Seat Front & Rear Wash Function

Video 6.2: This video demonstrates how to use the front and rear wash functions of the bidet toilet seat, showing the nozzle extension and water spray for each mode.

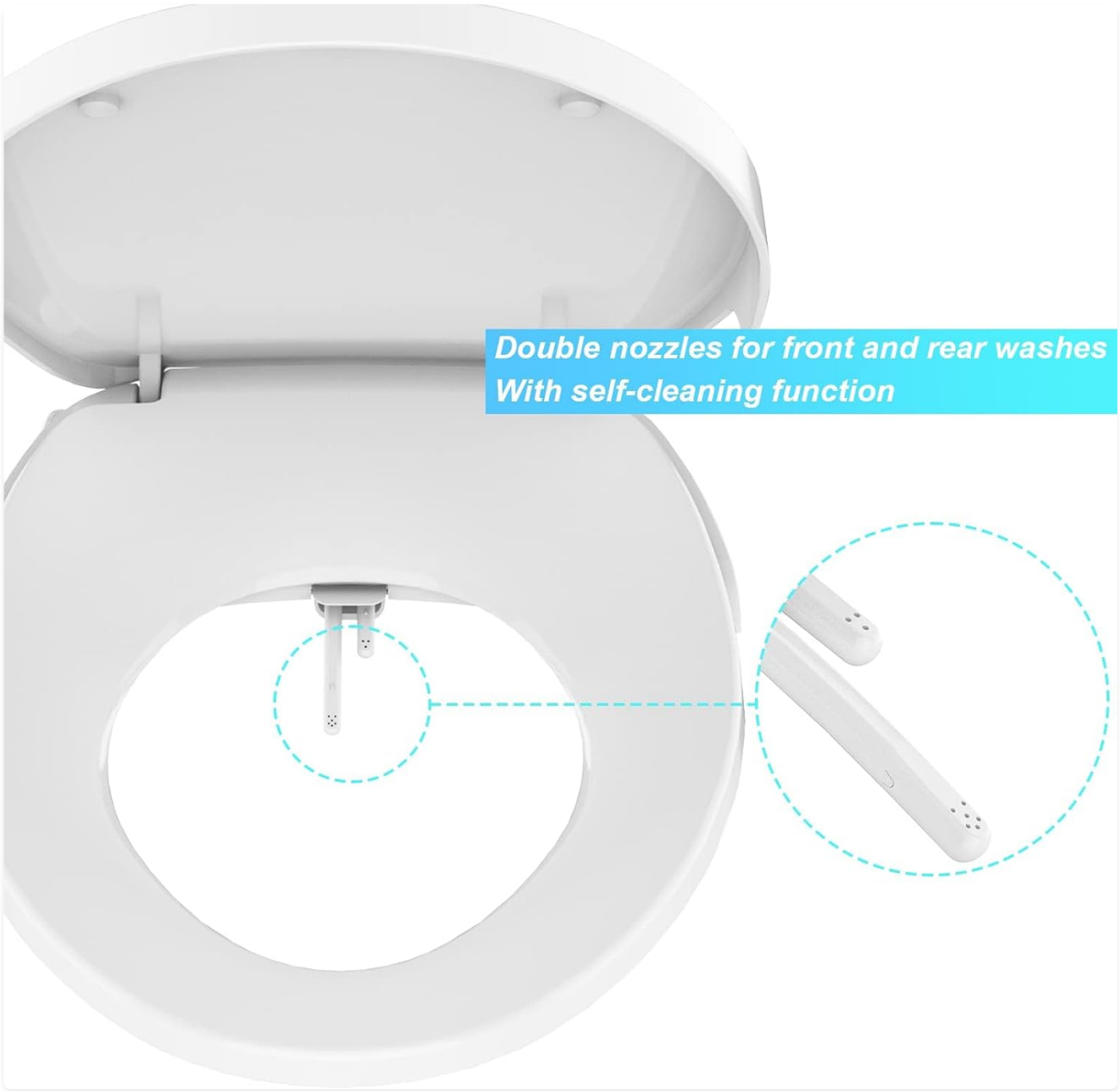

Figure 6.3: This image details the dual nozzle system, designed for both front and rear washing, featuring an automatic self-cleaning function for enhanced hygiene.

7. Maintenance

7.1 Nozzle Self-Cleaning

The dual nozzles automatically rinse themselves before and after each use to maintain hygiene. No manual cleaning of the nozzles is typically required for daily use.

7.2 General Cleaning

- Wipe the bidet seat and exterior surfaces with a soft, damp cloth and mild soap.
- Avoid using harsh detergents, abrasive cleaners, or chemical sprays, as these can damage the finish.
- For thorough cleaning, the bidet seat can be easily detached from the mounting plate by pressing the release button on the side.

8. Troubleshooting

- **No Water Spray:** Ensure the water supply valve is fully open and the T-adapter is correctly installed. Check that the

control knob is turned sufficiently to activate the spray.

- **Weak Water Pressure:** Verify the water supply valve is fully open. If the flow is still weak, check for any kinks in the water hose.
- **Leaks:** Tighten all connections by hand first, then use a wrench if necessary, being careful not to overtighten. Ensure all washers are properly seated.
- **Seat Not Secure:** Ensure the mounting bolts are fully tightened and the bidet seat is properly slid onto the mounting panel until it clicks.

9. Specifications

Feature	Detail
Brand	Garvee
Model Number	WHXAL-PHO_0XYKXH95JYIQX6U
Size	Round
Color	White Manual Bidet
Power Source	Hand-powered (Water Pressure)
Product Dimensions	46.99 x 36.83 x 7.62 cm
Item Weight	2.88 kg
Included Components	Bidet Seat, T-Adapter, Water Hose, Mounting Hardware
Country of Origin	China

10. Warranty and Support

For warranty information or technical support, please refer to the product packaging or contact Garvee customer service. Keep your purchase receipt for warranty claims.

Ask a question about this manual

Ask about setup, troubleshooting, compatibility, parts, safety, or missing instructions. Manuals+ will review the question and use this page's manual context to help answer it.

Name

Anonymous

Email

you@example.com

After a successful submission, we securely hash the supplied account or form email before sending it to Microsoft Advertising for conversion attribution. Privacy details.

Question

Example: How do I reset this device or fix this error?

Details

Model number, symptoms, what you tried, or the section of the manual you are using.

Submit question

Open the live page

https://manuals.plus/asin/B0FMY8TQW7

More documents and user manuals: **https://manuals.plus/**