Saved from manuals.plus.
Open the live page for links to other documents and user manuals.

Garvee 5 Ton Hydraulic Car Ramps (Model: NUXpCccw-8JtjSlUXvxHvA28)

Garvee 5 Ton Hydraulic Car Ramps Instruction Manual

Model: NUXpCccw-8JtjSlUXvxHvA28

Introduction

Thank you for choosing Garvee 5 Ton Hydraulic Car Ramps. These heavy-duty steel ramps are designed to provide a safe and elevated platform for various vehicle maintenance tasks, including oil changes, tire rotations, and undercarriage inspections. Featuring a low-profile design and adjustable hydraulic lift, they offer versatility and ease of use for both home garages and professional settings. Please read this manual thoroughly before operation to ensure safe and efficient use of your new car ramps.

Safety Information

WARNING: Failure to follow these safety instructions may result in serious injury or property damage.

- Always operate the ramps on a firm, level surface. Avoid soft ground, inclines, or uneven terrain.
- Ensure the vehicle's parking brake is engaged and the transmission is in park (automatic) or a low gear (manual) before driving onto the ramps.
- Center the vehicle's tires squarely on the ramps. Do not exceed the maximum load capacity of 11,050 LBS (5 tons per ramp).
- Once the vehicle is positioned, always insert the safety pins into the designated holes to secure the ramps at the desired height. Never work under a vehicle supported only by the hydraulic jack without the safety pins engaged.
- Do not attempt to lift a vehicle that exceeds the ramp's dimensions or weight capacity.
- Keep hands and feet clear of moving parts during lifting and lowering operations.
- Wear appropriate personal protective equipment (PPE), such as safety glasses and gloves.
- Never modify the ramps or hydraulic components. Use only genuine Garvee replacement parts.
- Before lowering the vehicle, ensure the area beneath is clear of personnel and tools.

Package Contents

Verify that all items are present and undamaged upon unpacking.

PACKAGE CONTENT

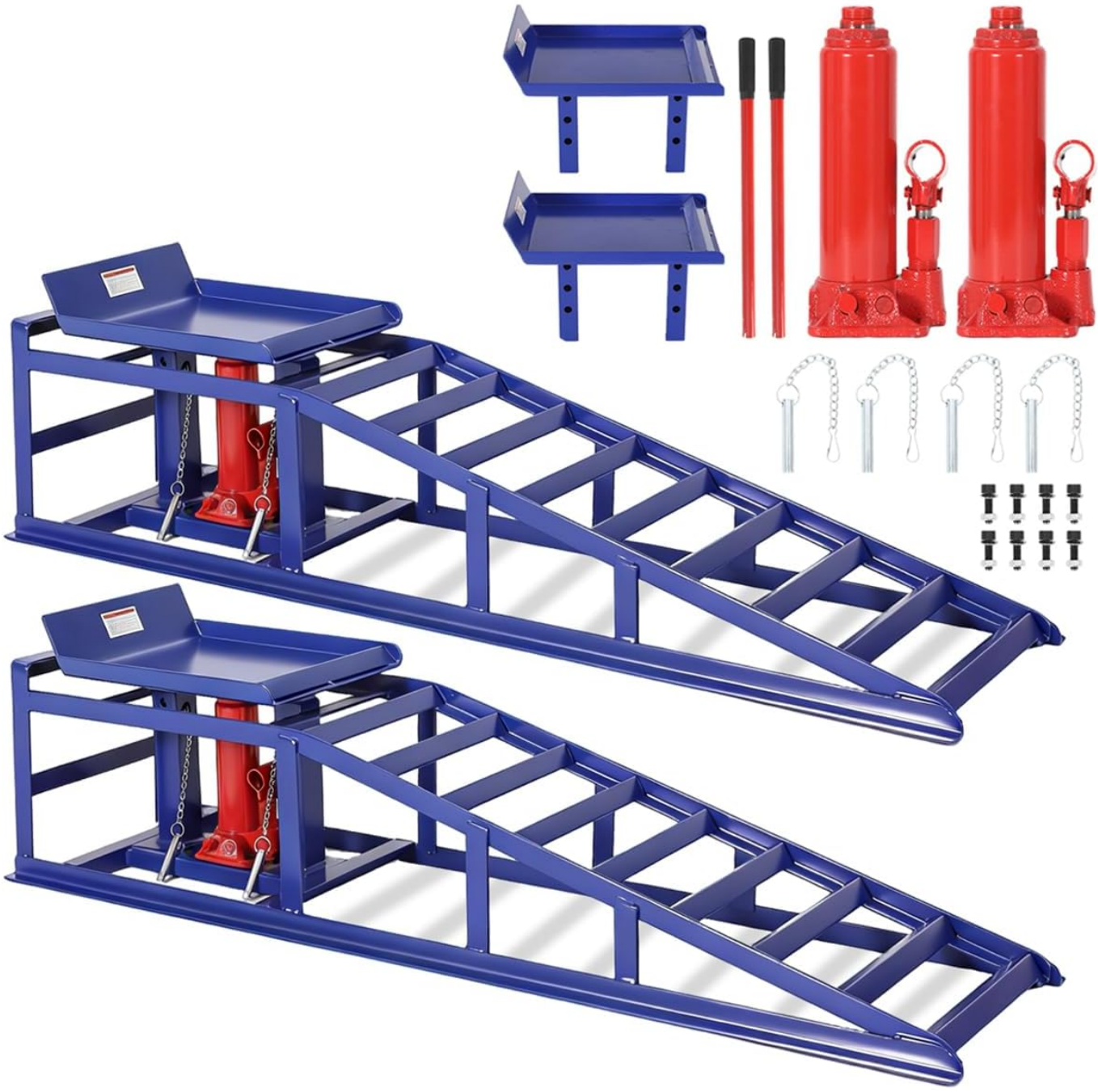

Image: Contents of the Garvee Hydraulic Car Ramps package, typically including two hydraulic ramps, two operating handles, and safety pins.

- 2 x Garvee Hydraulic Car Ramps
- 2 x Operating Handles
- 4 x Safety Pins (with chains)
- 1 x User Manual

SPECIFICATIONS

Detailed technical specifications for your Garvee Hydraulic Car Ramps.

PRODUCT SIZE

Max Lifting Height: 13.34 in
Min Lifting Height: 9.4 in
Max Bottom Length: 45 in
Max Bottom Width: 12.6 in
Platform Length: 12.59 in
Platform Width: 8.74 in
Net Weight: 87.84 lbs

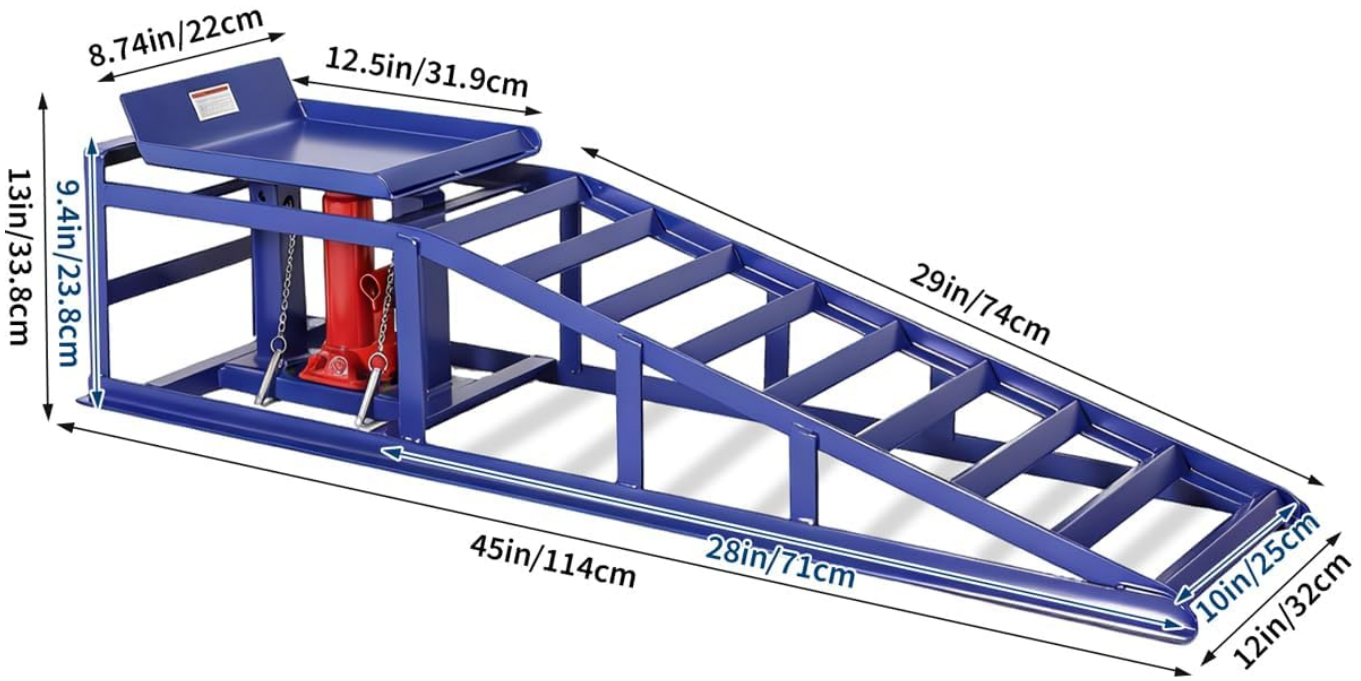

Image: Diagram illustrating the dimensions and key specifications of a single Garvee Hydraulic Car Ramp.

Feature	Specification
Brand	Garvee
Model Number	NUXpCccw-8JtjSlUXvxHvA28
Material	Alloy Steel
Color	Blue
Load Capacity	5 Ton (11,050 LBS) per ramp
Adjustable Lifting Height	9.4 in - 13.34 in

Product Dimensions (L x W x H)	47.24" x 17.32" x 12.99"
Net Weight	86.9 Pounds
Foldable	No

Setup

Before using the Garvee Hydraulic Car Ramps, ensure proper setup for safety and stability.

1. **Choose a Location:** Select a firm, level, non-slippery surface for operation. Avoid gravel, dirt, or sloped areas.
2. **Position Ramps:** Place the ramps directly in front of the vehicle's tires that you intend to lift. Ensure they are aligned straight with the tires.
3. **Prepare Vehicle:** Engage the vehicle's parking brake. For automatic transmissions, place the gear selector in 'Park'. For manual transmissions, place it in a low gear.
4. **Initial Height Adjustment:** The ramps are designed with a low-profile incline for easy drive-on. The hydraulic jack is initially in its lowest position.

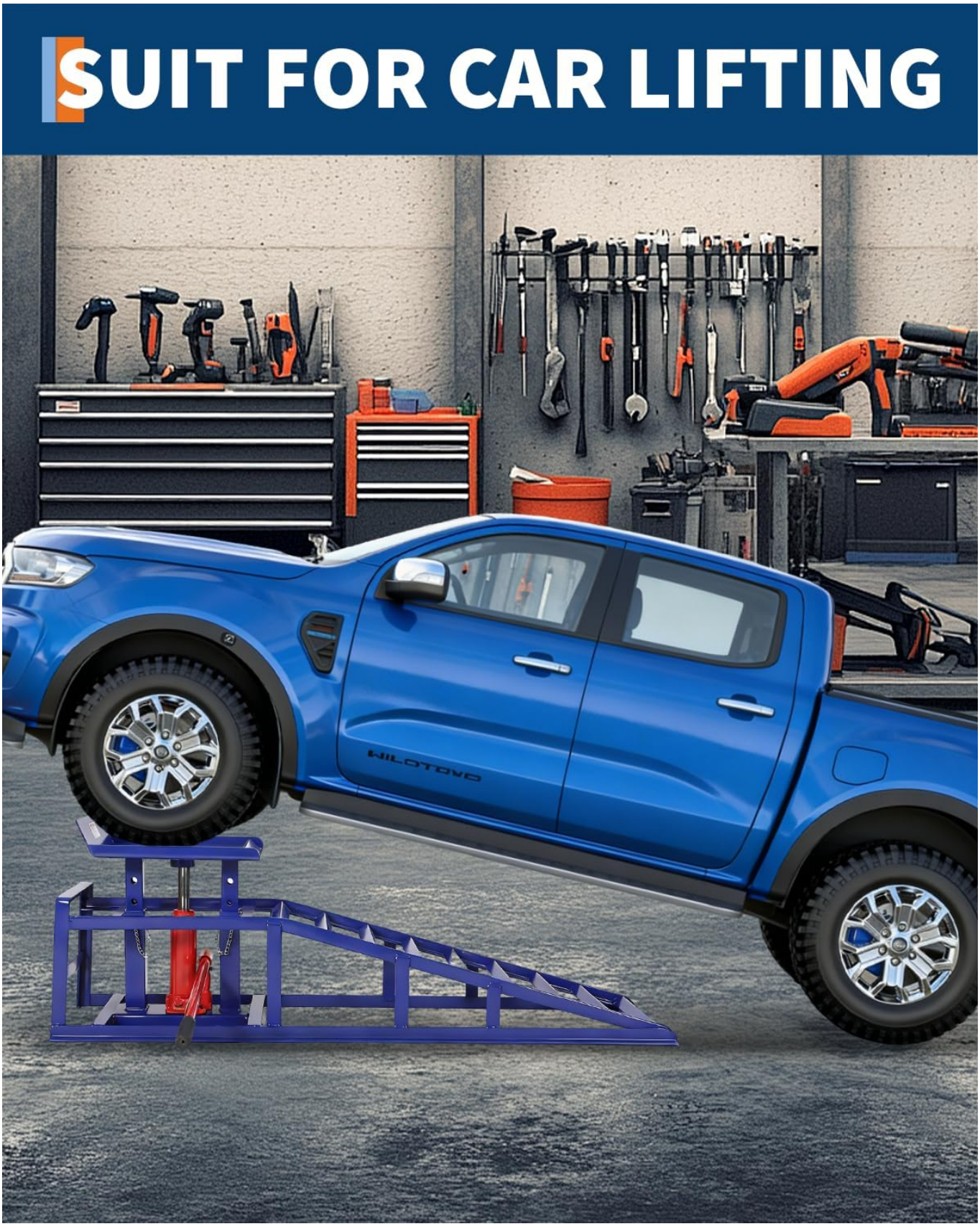

Image: A vehicle with its front wheels driven onto the Garvee Hydraulic Car Ramps, ready for lifting.

Operating Instructions

Follow these steps to safely lift and lower your vehicle using the Garvee Hydraulic Car Ramps.

1. **Drive Onto Ramps:** Slowly and carefully drive the vehicle onto the ramps until the tires are fully seated on the flat platform at the top. Ensure the vehicle is centered and not overshooting the ramps.
2. **Engage Parking Brake:** Double-check that the parking brake is firmly engaged.

3. **Insert Operating Handle:** Insert the operating handle into the hydraulic pump's socket.
4. **Lift Vehicle:** Pump the handle up and down to raise the hydraulic jack. The platform will lift, elevating the vehicle. Continue pumping until the desired working height is reached, or the maximum height of 13.34 inches.
5. **Secure with Safety Pins:** Once the desired height is achieved, immediately insert the safety pins through the corresponding holes in the ramp's frame and the hydraulic jack's support structure. Ensure the pins pass completely through both sides and are securely fastened. This locks the ramp at height and prevents accidental lowering.
6. **Perform Work:** With the vehicle securely supported by the safety pins, you can now safely perform maintenance tasks.
7. **Prepare for Lowering:** Before lowering, ensure all tools and personnel are clear from under and around the vehicle.
8. **Remove Safety Pins:** Carefully remove the safety pins from both ramps.
9. **Lower Vehicle:** Insert the operating handle into the release valve (usually a small knob or screw near the base of the hydraulic jack). Slowly turn the handle counter-clockwise to gradually release the hydraulic pressure, allowing the vehicle to descend smoothly. Do not open the valve too quickly, as this can cause a rapid and unsafe descent.
10. **Drive Off Ramps:** Once the vehicle is fully lowered and resting on the ground, slowly and carefully drive it off the ramps.



Image: A close-up view of the hydraulic jack mechanism on the Garvee Car Ramp, showing the adjustable height feature and the operating handle.

PRODUCT DETAILS

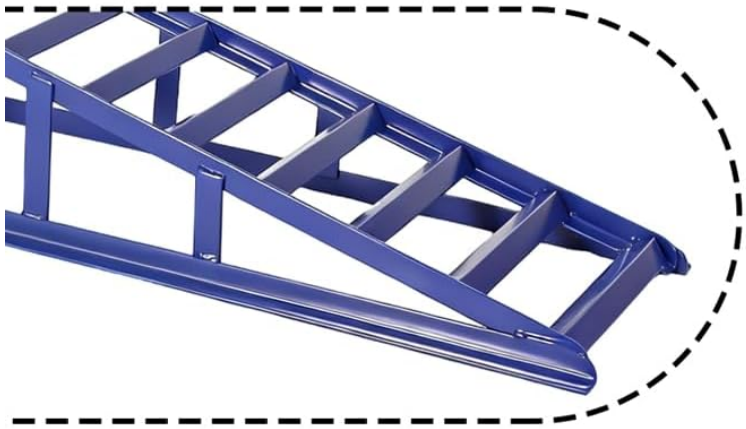

Sturdy Frame

It adopts thickened steel skeleton and mechanical support to ensures stable and safe performance

5 Ton Hydraulic Jack

The height can be adjusted according to different models, Convenient for lifting and supporting lower clearance





Safety lock pins

secure the ramp once lifted and should be removed before lowering

Image: Detailed view highlighting the sturdy frame, 5-ton hydraulic jack, and safety lock pins of the Garvee Car Ramp.

Maintenance

Regular maintenance ensures the longevity and safe operation of your Garvee Hydraulic Car Ramps.

- **Inspection:** Before each use, inspect the ramps for any signs of damage, cracks, bends, or excessive wear. Check the hydraulic cylinders for leaks. Do not use damaged ramps.
- **Cleaning:** Keep the ramps clean and free of dirt, grease, and debris. A rust-proof coating is applied, but regular cleaning helps maintain it.
- **Lubrication:** Periodically lubricate the moving parts of the hydraulic jack with a suitable hydraulic oil or grease to ensure smooth operation.
- **Storage:** Store the ramps in a dry, protected area when not in use to prevent rust and damage.
- **Hydraulic Fluid:** Check the hydraulic fluid level periodically. If low, refill with high-quality hydraulic jack oil

according to the manufacturer's recommendations (refer to the hydraulic jack's specific instructions if provided separately).

Troubleshooting

Refer to this section for common issues and their solutions.

Problem	Possible Cause	Solution
Ramp does not lift or lifts slowly.	Low hydraulic fluid, air in the system, or release valve not fully closed.	Check hydraulic fluid level and refill if necessary. Bleed air from the system (refer to hydraulic jack instructions). Ensure release valve is fully tightened before pumping.
Ramp lowers unexpectedly.	Release valve not fully closed, internal hydraulic leak, or safety pins not engaged.	Ensure release valve is fully closed. **Immediately engage safety pins after lifting.** If issue persists, discontinue use and contact customer support.
Vehicle slips on ramp.	Ramp surface is wet/oily, or vehicle not centered.	Ensure ramp surface is clean and dry. Drive onto ramps slowly and ensure tires are perfectly centered.

Warranty and Support

Specific warranty details for Garvee products are typically provided at the point of purchase or on the official Garvee website. For customer support, technical assistance, or warranty claims, please refer to the contact information provided with your purchase or visit the Garvee official store page.
Garvee Direct: Seller Information

© 2026 Garvee. All rights reserved.
This manual is for informational purposes only. Garvee is not responsible for any damage or injury resulting from improper use of this product.

Ask a question about this manual

Ask about setup, troubleshooting, compatibility, parts, safety, or missing instructions. Manuals+ will review the question and use this page's manual context to help answer it.

Name

Anonymous

Email

you@example.com

After a successful submission, we securely hash the supplied account or form email before sending it to Microsoft Advertising for conversion attribution. Privacy details.

Question

Example: How do I reset this device or fix this error?

Details

Model number, symptoms, what you tried, or the section of the manual you are using.

Submit question

Open the live page

https://manuals.plus/asin/B0FL6KBRCH

More documents and user manuals: **https://manuals.plus/**