Saved from manuals.plus.
Open the live page for links to other documents and user manuals.

VEVOR DBF18QT

VEVOR DBF18QT Outdoor Propane Deep Fryer Instruction Manual

Model: DBF18QT

Introduction Safety Information Package Contents Setup & Assembly Operating Instructions Maintenance Troubleshooting Specifications Warranty & Support

1. Introduction

Thank you for choosing the VEVOR DBF18QT Outdoor Propane Deep Fryer. This manual provides essential information for the safe and efficient operation, assembly, and maintenance of your new deep fryer. Please read all instructions carefully before use and retain this manual for future reference.
This dual-tank propane deep fryer is designed for outdoor use, offering a large capacity for frying various foods such as fish, wings, and fries. Its portable design with wheels and powerful burners make it suitable for family meals, camping, parties, and other outdoor gatherings.

2. Safety Information

WARNING: Failure to follow these instructions could result in fire, explosion, or burn hazards, which could cause property damage, personal injury, or death.

- **FOR OUTDOOR USE ONLY:** Never operate this appliance indoors or in an enclosed area. Ensure adequate ventilation.
- **PROPANE GAS ONLY:** Use only propane gas with the provided CSA certified pressure regulator and hose. Do not use any other fuel.
- **LEAK CHECK:** Always perform a leak check on all gas connections before each use. Use a soapy water solution; never use an open flame to check for leaks.
- **STABLE SURFACE:** Place the fryer on a stable, level, non-combustible surface. Keep it away from combustible materials, structures, and vegetation.
- **OIL SAFETY:** Do not overfill the oil tanks. Always observe the maximum fill line. Never leave hot oil unattended. Keep children and pets away from the fryer during operation.
- **FIRE EXTINGUISHER:** Keep a fire extinguisher (Class K for cooking oil fires) readily available.
- **PROTECTIVE GEAR:** Wear appropriate protective gear, such as heat-resistant gloves and eye protection, when operating the fryer.
- **WIND PROTECTION:** The fryer includes a wind shield for stable temperature control. However, avoid operating in excessively windy conditions.
- **COOL DOWN:** Allow the fryer and oil to cool completely before cleaning or moving.

3. Package Contents

Verify that all components are present and undamaged before assembly.

- 1 x Outdoor Fryer Main Unit (with frame and burners)
- 2 x 18QT Aluminum Oil Tanks
- 3 x Frying Baskets (2 small, 1 large)
- 2 x Thermometers
- 1 x CSA Certified Pressure Regulator with Hose
- Wheeled Cart Components (legs, wheels, propane tank holder)
- Assembly Hardware (bolts, wing nuts, etc.)



Image: All components of the VEVOR DBF18QT Outdoor Propane Deep Fryer, including the main unit, tanks, baskets, and thermometers.

4. Setup & Assembly

Follow these steps to assemble your deep fryer:

1. **Attach Legs and Wheels:** Securely attach the four legs to the main fryer unit using the provided hardware. Ensure the legs with wheels are positioned correctly for mobility. The legs can be removed for compact storage by loosening the wing nuts.
2. **Install Propane Tank Holder:** Assemble and attach the propane tank holder to the bottom frame of the fryer.
3. **Place Oil Tanks:** Carefully place the two 18QT aluminum oil tanks into their designated slots on the top of the fryer unit.
4. **Connect Regulator and Hoses:** Connect the CSA certified pressure regulator to your propane tank. Then, connect the hoses from the regulator to the gas inlets on the fryer burners. Ensure all connections are tight.
5. **Perform Leak Check:** Before first use and after any tank or hose connection, perform a leak check. Apply a soapy water solution to all gas connections. If bubbles appear, there is a leak. Tighten connections or replace parts as necessary. Do not operate if a leak is detected.
6. **Insert Baskets and Thermometers:** Place the frying baskets into the oil tanks. Insert the thermometers into the designated clips on the tanks to monitor oil temperature.

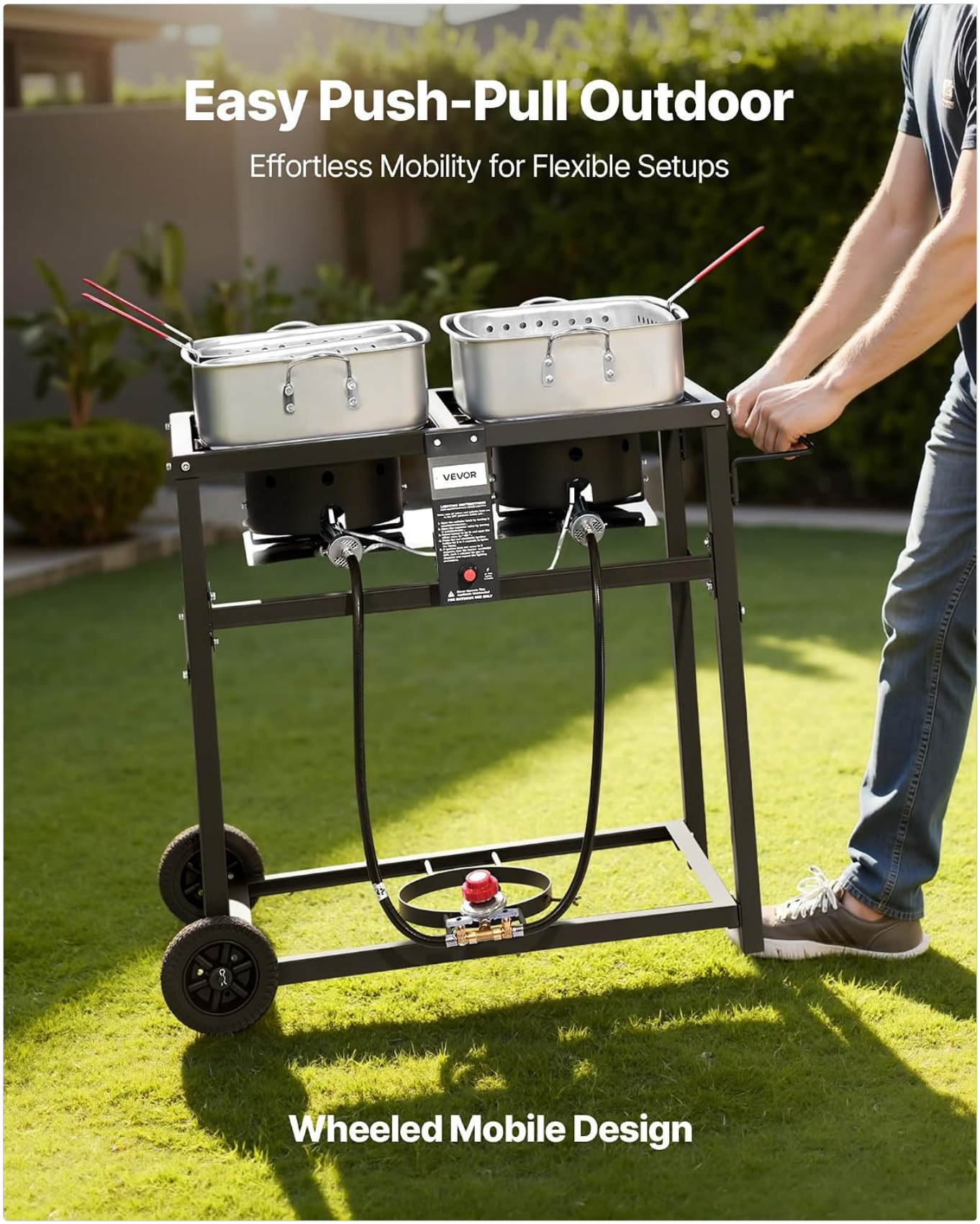

Image: The VEVOR DBF18QT deep fryer featuring its wheeled design for effortless outdoor mobility.



Image: The fryer set up with one large and two small baskets, demonstrating its multi-basket convenience.

5. Operating Instructions

5.1 Pre-Operation Checklist

- Ensure the fryer is on a stable, level surface outdoors, away from any combustible materials.
- Confirm all gas connections are tight and leak-free.
- Ensure the propane tank valve is closed before connecting.

- Fill each oil tank with cooking oil, ensuring the oil level is between the MIN and MAX fill lines. Do not overfill.

5.2 Ignition Procedure

1. Ensure both burner control knobs are in the OFF position.
2. Open the propane cylinder knob by turning it counterclockwise.
3. Open the regulator valve by turning it anticlockwise.
4. To ignite a burner, push and turn the corresponding burner control knob to the 'ON' position.
5. Immediately press and hold the red electronic ignition button for 3 to 5 seconds to ignite the flame. An AAA battery (not included) is required for the electronic ignition.
6. If the burner does not ignite within 5 seconds, turn the burner control knob to OFF, wait 5 minutes for gas to disperse, and repeat the lighting procedure.
7. Adjust the flame to achieve the desired oil temperature, monitoring with the integrated thermometer.

Convenient & Quick Ignition

One-Touch Design, Start Cooking Easily

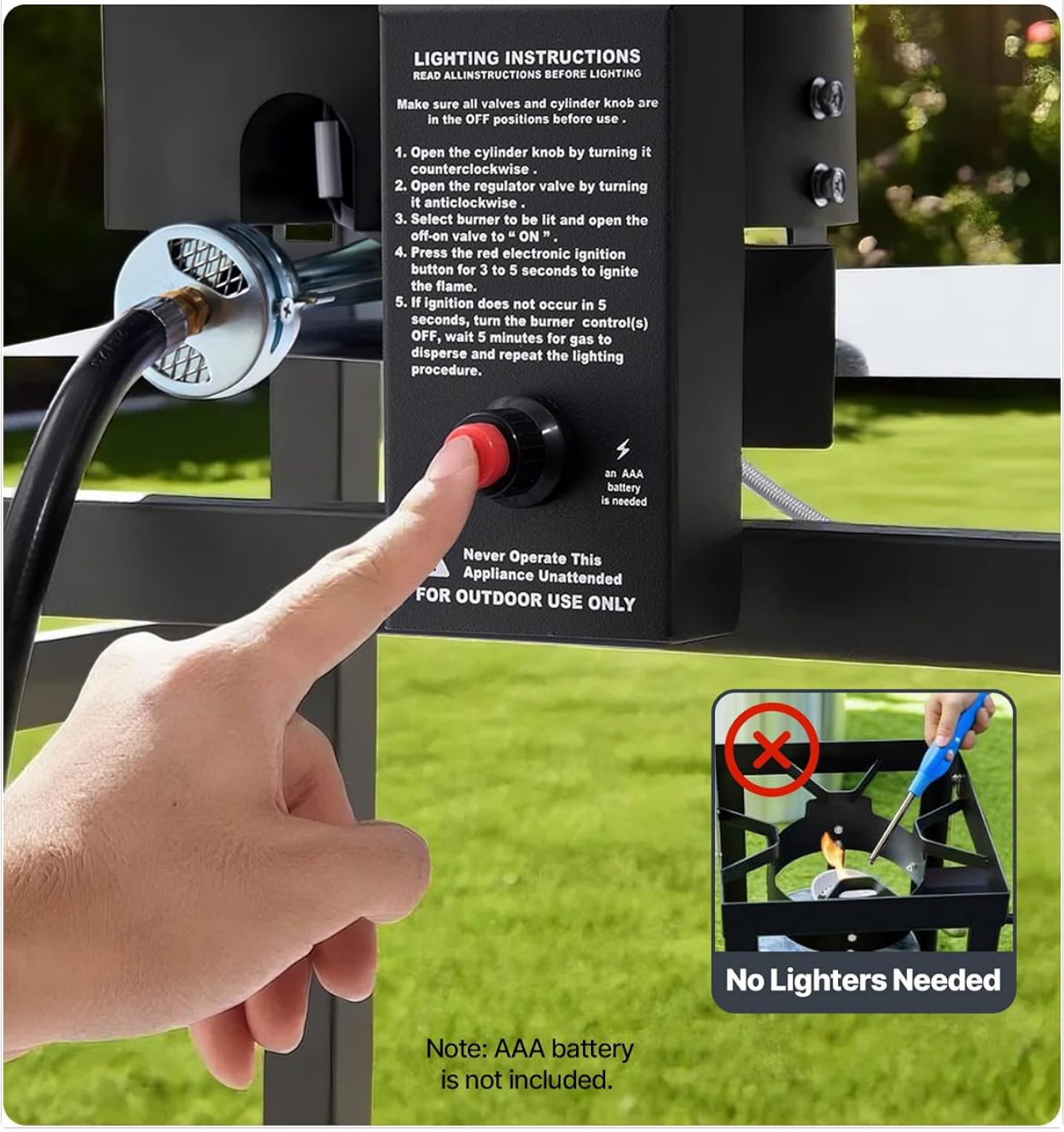

Image: Close-up of the electronic ignition button and lighting instructions on the fryer unit.



Image: View of a high-performance burner with a stable flame, indicating 40,000 BTU output.

5.3 Frying Food

- Once the oil reaches the desired temperature (typically 350-375°F or 175-190°C for most fried foods), carefully place food into the frying baskets. Do not overload baskets.
- Slowly lower the baskets into the hot oil.
- Fry until food is golden brown and cooked through.
- Carefully lift the baskets and hook them onto the integrated draining rod to allow excess oil to drip back into the tank.

- Remove food from baskets and place on a paper towel-lined tray to further drain.



Image: The dual-tank fryer in operation, simultaneously frying french fries and chicken wings.

5.4 Shut Down Procedure

1. Turn all burner control knobs to the OFF position.
2. Close the propane cylinder valve.
3. Allow the fryer and oil to cool completely before attempting to clean or move the unit.

6. Maintenance

6.1 Cleaning

- **Oil Disposal:** Once the oil has cooled, carefully drain it from the tanks. Dispose of used cooking oil responsibly according to local regulations.
- **Tank Cleaning:** Remove the aluminum tanks. Wash them with warm, soapy water and a non-abrasive sponge. Rinse thoroughly and dry completely to prevent rust.
- **Basket Cleaning:** Clean the frying baskets with warm, soapy water. Ensure all food debris is removed. Rinse and dry.
- **Exterior Cleaning:** Wipe down the exterior of the fryer unit with a damp cloth. Avoid using harsh chemicals or abrasive cleaners that could damage the finish.

6.2 Storage

- Ensure the fryer is completely clean and dry before storing.
- Store the fryer in a cool, dry place, protected from weather elements.
- Disconnect and store the propane tank separately in a well-ventilated area, away from ignition sources.

7. Troubleshooting

If you encounter issues with your deep fryer, refer to the following common troubleshooting tips:

- **Burner Not Igniting:**
  - Check if the propane tank is open and has sufficient fuel.
  - Ensure all gas connections are tight and there are no leaks.
  - Verify the AAA battery for the electronic ignition is correctly installed and not depleted.
  - Ensure the burner control knob is fully pushed in and turned to the 'ON' position before pressing the ignition button.
- **Low Flame/Insufficient Heat:**
  - Check propane tank level.
  - Ensure the regulator and tank valve are fully open.
  - Inspect burner ports for any blockages and clean if necessary.
- **Oil Not Heating Evenly:**
  - Ensure the fryer is on a level surface.
  - Avoid overloading the baskets, which can drop oil temperature significantly.
  - Allow sufficient time for oil to reheat between batches.

For persistent issues not covered here, please contact VEVOR customer support.

8. Specifications

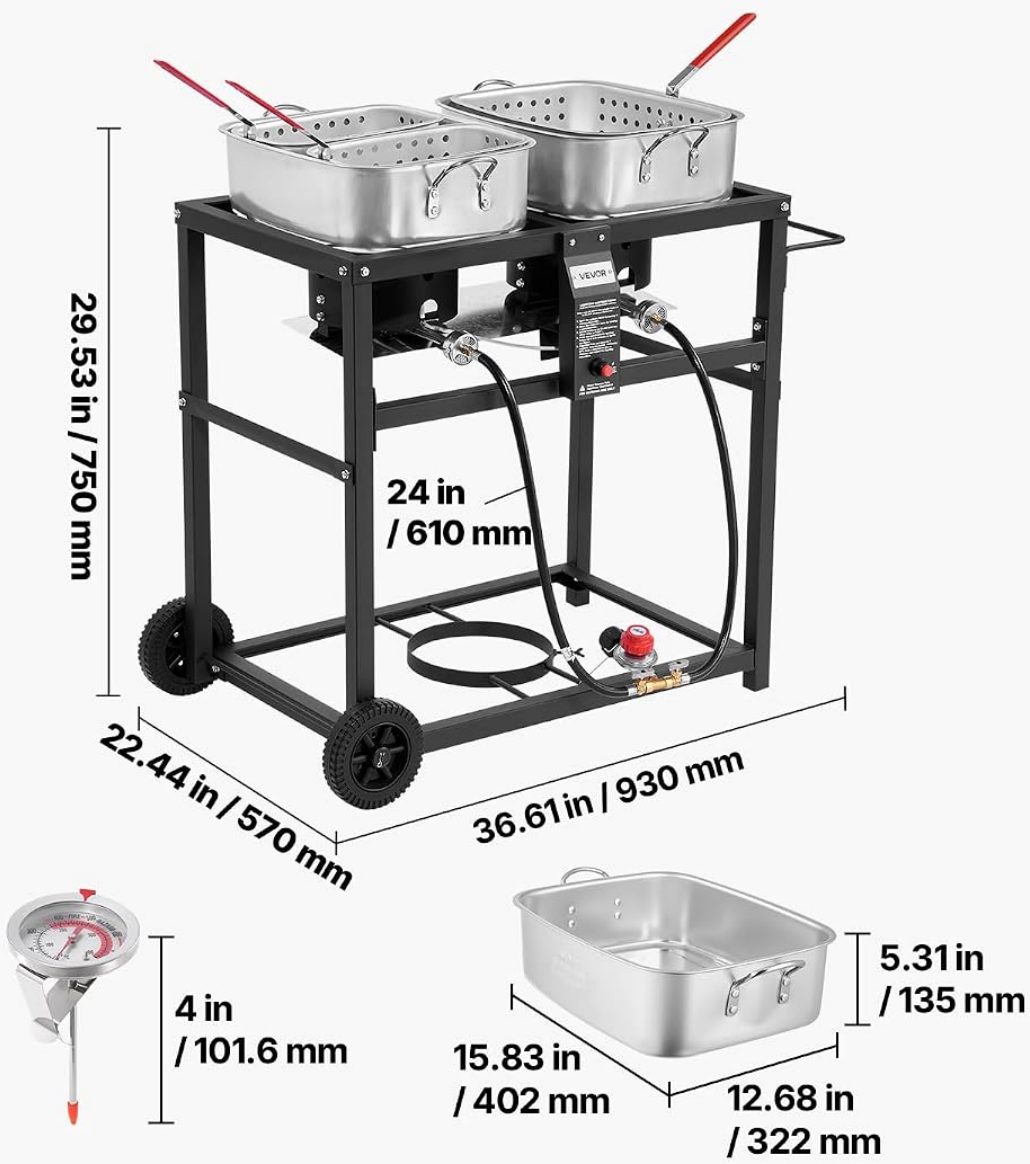

Item Model Number: **DBF18QT**

Color: **Black**

Number of Burners: **2**

Tank Capacity: **36QT / 34L (total)**

Product Weight: **38.58 lb / 17.5 kg**

Fuel Type: **Propane**

Main Materials: **Aluminum**

Number of Fry Baskets: **3**

Burner Heat Output:

40,000 BTU/HOUR Each

Image: Detailed diagram showing the dimensions and key specifications of the VEVOR DBF18QT deep fryer.

Feature	Specification
Model Number	DBF18QT
Brand	VEVOR
Material	Stainless Steel (tanks), Black Steel (frame)

Feature	Specification
Color	Black
Product Dimensions (D x W x H)	36.6" x 22.4" x 29.5" (930mm x 570mm x 750mm)
Item Weight	38.58 lbs (17.5 kg)
Oil Capacity	36 Quarts Total (2 x 18 Quarts / 2 x 17L)
Number of Burners	2
Burner Heat Output	40,000 BTU/Hour Each
Fuel Type	Propane
Included Baskets	3 (2 small, 1 large)
Ignition Type	Electronic Ignition (requires 1x AAA battery, not included)
Certifications	CSA Certified Pressure Regulator

9. Warranty & Support

VEVOR products are designed for durability and performance. For specific warranty information, including terms and conditions, please refer to the warranty card included with your product or visit the official VEVOR website. If you require technical assistance, replacement parts, or have any questions regarding your VEVOR DBF18QT Outdoor Propane Deep Fryer, please contact VEVOR customer support through their official channels.

© 2026 VEVOR. All rights reserved.

Ask a question about this manual

Ask about setup, troubleshooting, compatibility, parts, safety, or missing instructions. Manuals+ will review the question and use this page's manual context to help answer it.

Name

Anonymous

Email

you@example.com

After a successful submission, we securely hash the supplied account or form email before sending it to Microsoft Advertising for conversion attribution. Privacy details.

Question

Example: How do I reset this device or fix this error?

Details

Model number, symptoms, what you tried, or the section of the manual you are using.

Submit question

Open the live page

https://manuals.plus/asin/B0FJ1NPXB1

More documents and user manuals: **https://manuals.plus/**