Saved from manuals.plus.
Open the live page for links to other documents and user manuals.

Garvee PHO_16MBBOHFB79

Garvee 5-Drawer Dresser Instruction Manual

Model: PHO_16MBBOHFB79

Introduction Setup Operating Maintenance Troubleshooting Specifications Support

1. Introduction

Thank you for choosing the Garvee 5-Drawer Dresser. This manual provides essential information for the safe assembly, proper use, and maintenance of your new furniture. Please read all instructions carefully before beginning assembly and retain this manual for future reference.

Safety Information

- Always follow assembly instructions precisely.
- Ensure all hardware is securely tightened before use.
- Install the anti-tipping device as instructed to prevent accidents, especially in households with children or pets.
- Do not overload drawers or the top surface beyond specified weight capacities.
- Keep small parts and packaging materials away from children during assembly.

2. Setup and Assembly

The Garvee 5-Drawer Dresser requires assembly. All necessary hardware and step-by-step instructions are included in the package. Please ensure you have adequate space and the required tools (typically a screwdriver) before starting.

Assembly Steps Overview

1. Unpack all components and verify against the parts list provided in your assembly guide.
2. Assemble the main frame of the dresser according to the detailed diagrams.
3. Construct each drawer, ensuring smooth operation of the metal slides.

4. Install the legs onto the base of the dresser.
5. **Crucially, install the anti-tipping device to secure the dresser to a wall.**

Anti-Tipping Device Installation

To ensure stability and prevent accidental tipping, it is mandatory to install the included anti-tipping device. This device secures the dresser to a wall, significantly reducing the risk of injury.



This image provides a visual guide for installing the anti-tipping device. It shows the wall anchor hardware, a correct installation example where the dresser is secured to the wall, and an incorrect example where the dresser is unstable and prone to tipping.

Follow the specific instructions provided with the anti-tipping hardware. Typically, this involves attaching a bracket to the back of the dresser and another to the wall, then connecting them with a strap or cable. Ensure the wall anchor is suitable for your wall material.

3. Operating Instructions

The Garvee 5-Drawer Dresser is designed for organizing clothing, accessories, and other personal items. Its five spacious drawers operate on smooth metal slides for easy access.

Drawer Usage

- Pull the metal handles gently to open drawers.
- Push firmly to close drawers completely.
- Avoid forcing drawers open or closed if they encounter resistance. Check for obstructions.



This image shows the Garvee 5-Drawer Dresser with all five drawers pulled open, illustrating the generous storage capacity available for organizing various items.



This image provides close-up views of key features: a gold-colored metal handle on a fluted drawer front, smooth metal slides for drawer operation, the wall-attach device for anti-tipping safety, and the white legs with gold-tipped metal feet.

Weight Capacity

- The maximum weight capacity for the entire dresser top is**100 lbs**.
- Each individual drawer has a maximum weight capacity of**22 lbs**.
- Distribute weight evenly to maintain stability and prevent damage.

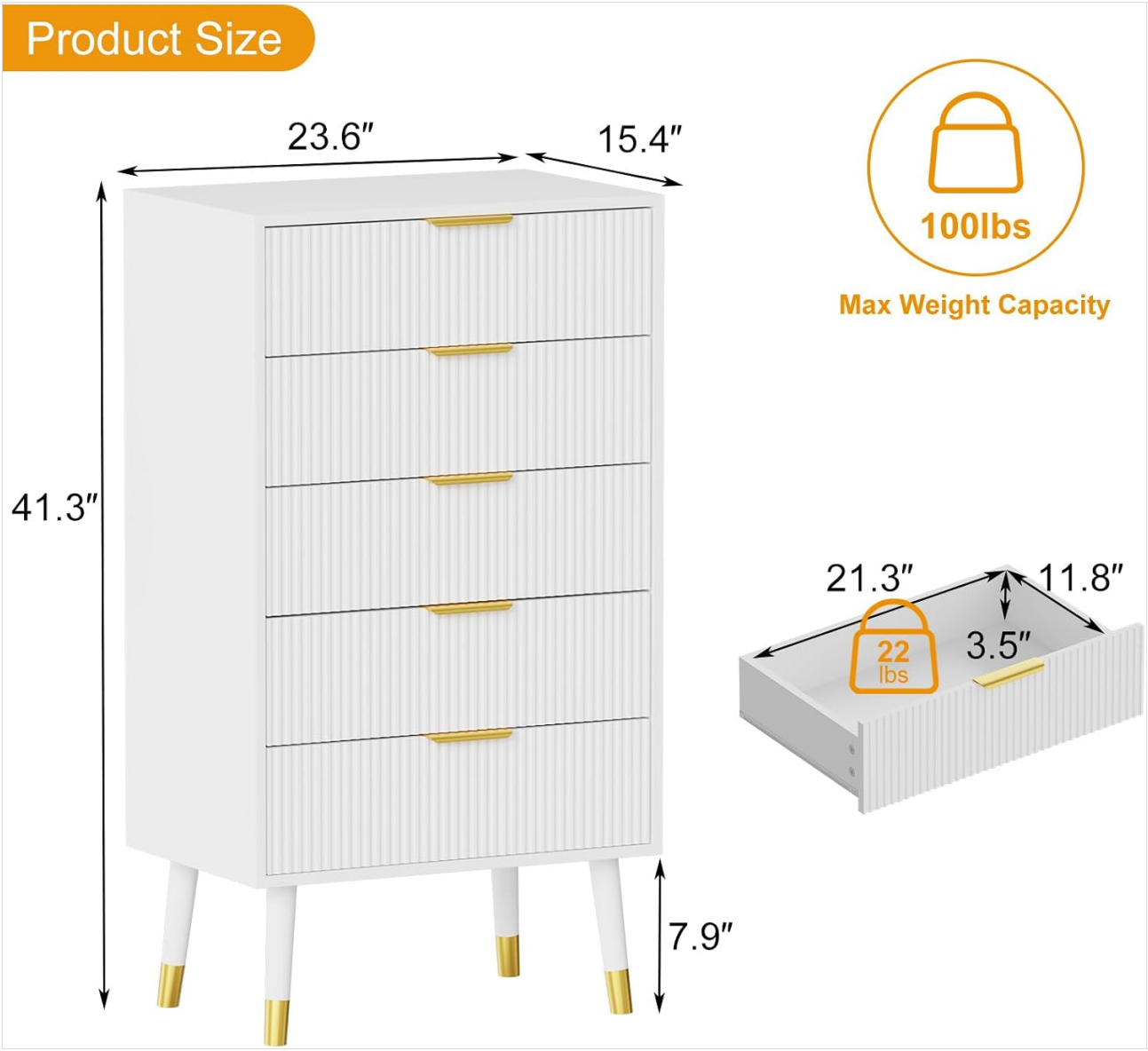

This image illustrates the overall dimensions of the Garvee 5-Drawer Dresser: 23.6 inches wide, 15.4 inches deep, and 41.3 inches high. The legs are 7.9 inches high. It also shows a maximum weight capacity of 100 lbs for the entire unit and 22 lbs per drawer.

4. Maintenance and Care

Proper care will extend the life and appearance of your Garvee 5-Drawer Dresser. The dresser features a scratch-resistant and waterproof surface for easy cleaning.

Cleaning Instructions

- Wipe surfaces with a soft, damp cloth.
- Avoid using harsh chemicals, abrasive cleaners, or polishes, as these can damage the finish.
- Promptly clean up spills to prevent staining.

General Care

- Periodically check all screws and fasteners to ensure they remain tight. Retighten if necessary.
- Avoid placing hot items directly on the surface; use coasters or protective pads.
- Keep the dresser away from direct sunlight and extreme temperature changes to prevent material warping or discoloration.

5. Troubleshooting

If you encounter any issues with your Garvee 5-Drawer Dresser, please refer to the following common solutions before contacting customer support.

Common Issues and Solutions

- **Drawers do not slide smoothly:** Check that the metal slides are correctly aligned and free of obstructions. Ensure all screws securing the slides are tight.
- **Dresser feels wobbly:** Verify that all assembly screws are fully tightened. Ensure the dresser is placed on a level surface. Confirm the anti-tipping device is securely installed.
- **Missing parts:** Double-check all packaging materials. If parts are genuinely missing, contact customer service with your model number and a description of the missing components.
- **Damage during assembly:** If a component is damaged during assembly, stop and contact customer service for assistance.

6. Specifications

Feature	Detail
Brand	Garvee
Model Name	Drawer Dresser
Model Number	PHO_16MBBOHFB79
Product Dimensions (Overall)	23.6"D x 15.4"W x 41.3"H
Color	White
Room Type	Bedroom (Versatile for other rooms)
Assembly Required	Yes
Item Weight	63.5 Pounds
Material	Engineered Wood
Finish Type	Painted
Number of Drawers	5
Max Top Weight Capacity	100 lbs
Max Drawer Weight Capacity	22 lbs per drawer
UPC	199414355094

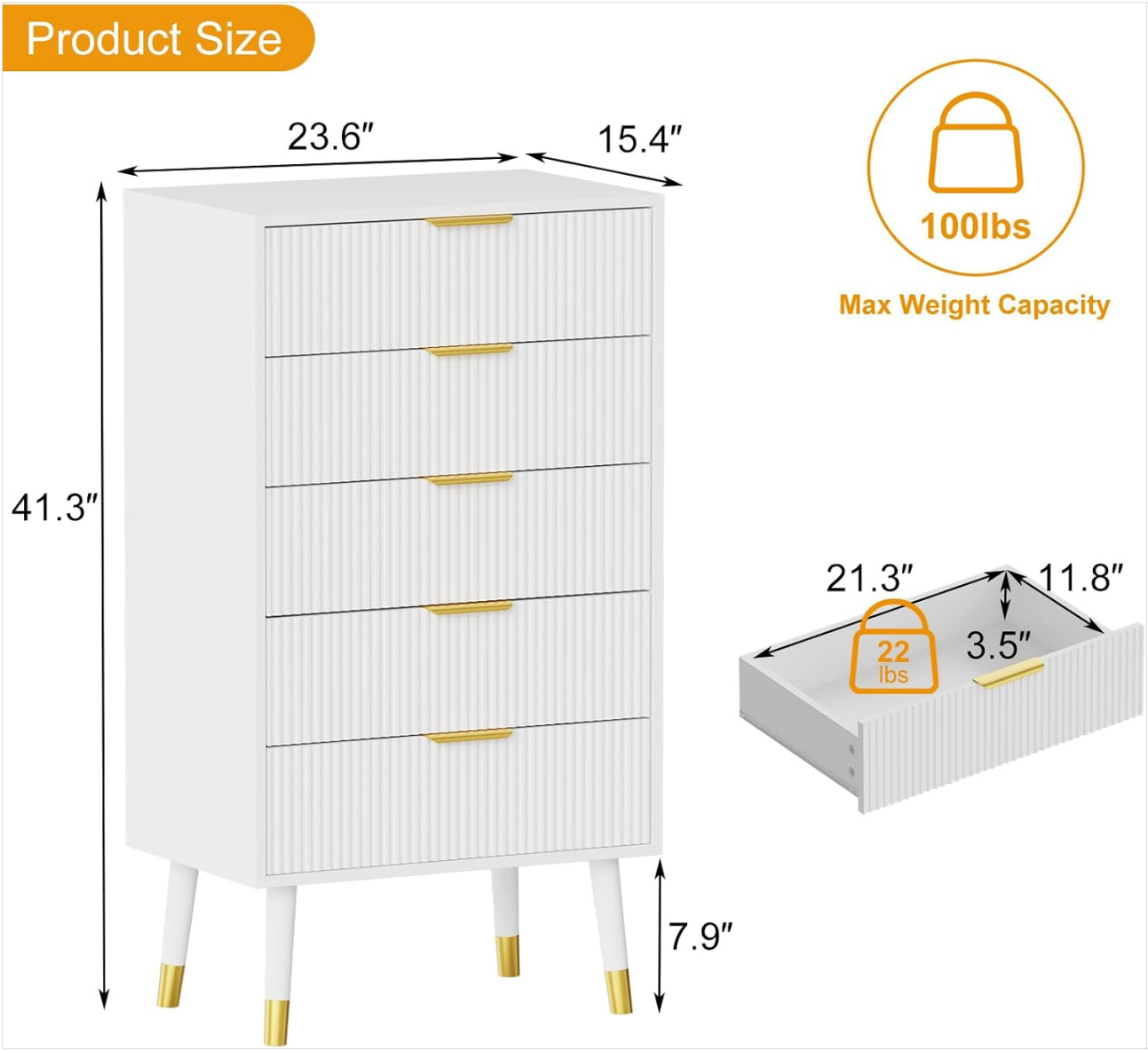

This image illustrates the overall dimensions of the Garvee 5-Drawer Dresser: 23.6 inches wide, 15.4 inches deep, and 41.3 inches high. The legs are 7.9 inches high. It also shows a maximum weight capacity of 100 lbs for the entire unit and 22 lbs per drawer.

7. Customer Support

For any questions, concerns, or assistance with your Garvee 5-Drawer Dresser, please do not hesitate to contact our dedicated customer service team. We are committed to providing support and aim to respond to all inquiries within 24 hours.

Contact Information

- Please refer to the contact details provided in your product packaging or purchase documentation.
- When contacting support, please have your model number (PHO_16MBBOHFB79) and a detailed description of your issue ready.

Warranty Information

Specific warranty details are typically included with your purchase documentation. Please refer to those materials for information regarding coverage and terms.

© 2025 Garvee. All rights reserved.

Ask a question about this manual

Ask about setup, troubleshooting, compatibility, parts, safety, or missing instructions. Manuals+ will review the question and use this page's manual context to help answer it.

Name

Anonymous

Email

you@example.com

After a successful submission, we securely hash the supplied account or form email before sending it to Microsoft Advertising for conversion attribution. Privacy details.

Question

Example: How do I reset this device or fix this error?

Details

Model number, symptoms, what you tried, or the section of the manual you are using.

Submit question

Open the live page

https://manuals.plus/asin/B0FFLQRQZ3

More documents and user manuals: **https://manuals.plus/**