Saved from manuals.plus.
Open the live page for links to other documents and user manuals.

WHYFONE WF9113-B

WHYFONE WF9113-B Full Motion TV Wall Mount

Instruction Manual

1. Introduction

This manual provides detailed instructions for the safe and proper installation and operation of your WHYFONE WF9113-B Full Motion TV Wall Mount. Please read all instructions carefully before installation to ensure safety and optimal performance. This mount is designed for televisions and monitors ranging from 13 to 50 inches, with a maximum weight capacity of 35 kg (77 lbs). Its robust alloy steel construction and T-shape design ensure durability and secure support.

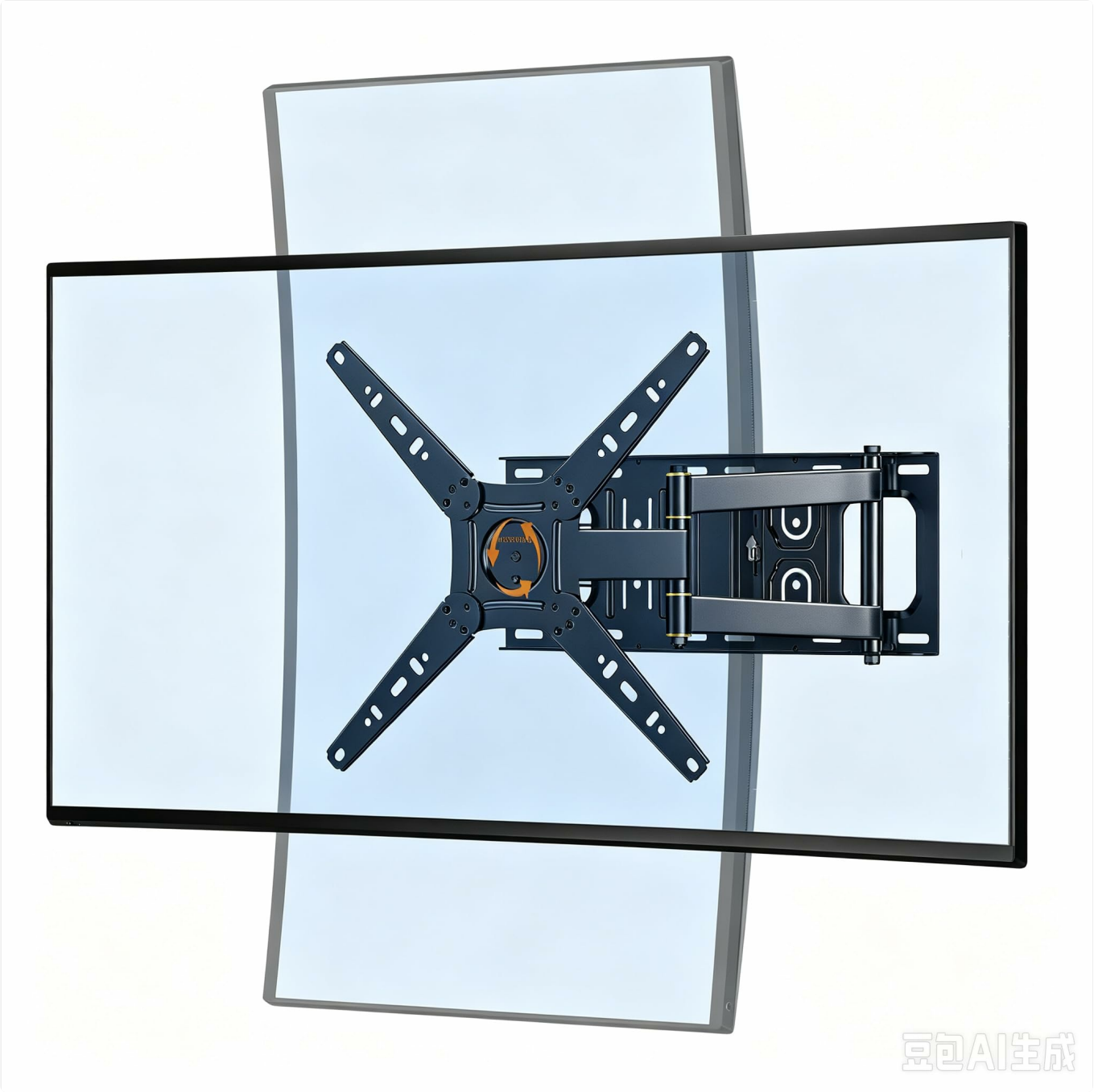

Image 1.1: WHYFONE WF9113-B TV Wall Mount in use, demonstrating its full motion capabilities.

2. Safety Information

WARNING: Failure to read and follow these instructions may result in serious personal injury, property damage, or voiding your warranty. If you do not understand these instructions or have doubts about the safety of the installation, please contact customer support or a qualified installer.

- Do not mount on drywall alone. This mount requires installation into solid concrete, wood studs, or brick walls.
- Ensure the wall structure can safely support the combined weight of the mount and your television.
- Do not exceed the maximum weight capacity of 35 kg (77 lbs).
- Use only the provided mounting hardware. If any parts are missing or damaged, contact customer support.
- Always have at least two people for installation to prevent injury or damage.
- Keep children and pets away during installation.



Image 2.1: Wall compatibility and safety warning regarding drywall installation.

3. Package Contents

Verify that all components are present and undamaged before proceeding with installation. The package typically includes:

- TV Wall Mount Assembly (Main Arm and Wall Plate)

- TV Bracket Adapters
- Mounting Hardware Kit (various screws, anchors, washers for TV and wall)
- Bubble Level
- Cable Ties
- Instruction Manual (this document)



Image 3.1: Typical package contents for the WHYFONE TV Wall Mount.

4. Specifications

Feature	Detail
Model Number	WF9113-B
Brand	WHYFONE
Compatible TV Sizes	13 - 50 inches
Maximum Load Capacity	35 kg (77 lbs)
VESA Compatibility	75x75mm to 300x300mm
Material	Alloy Steel
Color	Black
Extension from Wall	80mm (retracted) to 655mm (extended)
Tilt Angle	+5° to -12°
Swivel Angle	+/- 90° (depending on TV size)
Rotation	+/- 90° (for landscape to portrait orientation)
Compatible Wall Types	Solid Concrete, 16" Wood Stud, Brick Wall

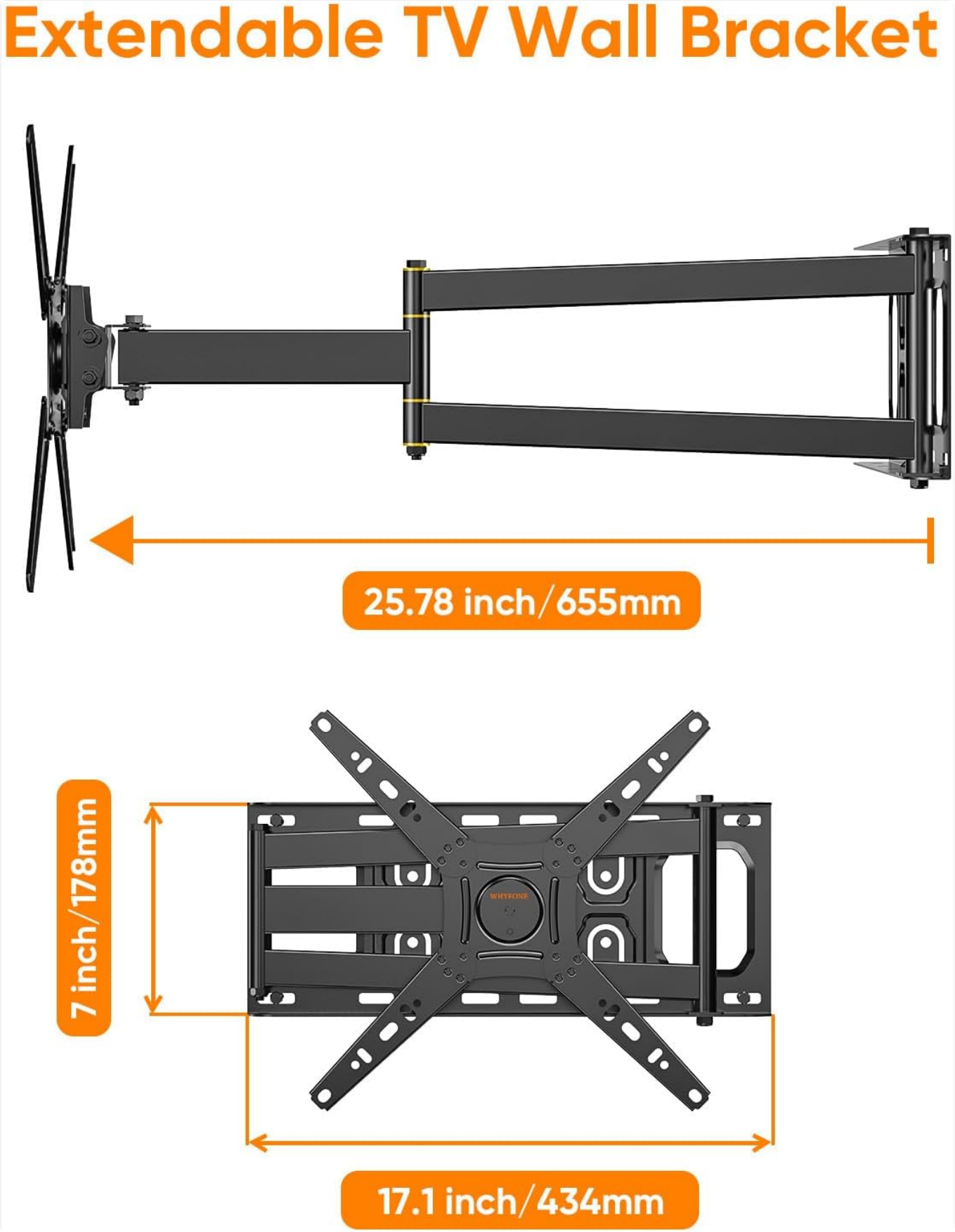

Image 4.1: Detailed dimensions of the WHYFONE WF9113-B TV Wall Mount.

5. Installation Guide

Before you begin, ensure you have all necessary tools (e.g., drill, stud finder, screwdriver, measuring tape) and that you have read the safety information.

5.1. Attaching TV Brackets to Your TV

1. Carefully place your TV face-down on a soft, clean surface to prevent screen damage.
2. Identify the VESA mounting holes on the back of your TV.
3. Select the appropriate screws, washers, and spacers from the hardware kit that fit your TV's VESA pattern.
4. Attach the TV brackets to the back of your TV using the selected hardware. Ensure the brackets are centered and securely fastened. Do not overtighten.



Image 5.1: Attaching the TV brackets to the television.

5.2. Mounting the Wall Plate

1. Determine the desired height for your TV. Mark the center of where the TV will be mounted.
2. Use a stud finder to locate wood studs if mounting on a wood stud wall. For concrete or brick, ensure the location is suitable.
3. Position the wall plate at the marked location and use the included bubble level to ensure it is perfectly horizontal. Mark the drill holes.
4. Drill pilot holes at the marked locations. The drill bit size will vary depending on your wall type (refer to the hardware kit instructions).
5. Insert wall anchors (if required for your wall type).
6. Secure the wall plate to the wall using the appropriate lag bolts and washers. Tighten firmly, but do not overtighten.



Image 5.2: Securing the wall plate to the wall, ensuring level installation.

5.3. Hanging the TV

1. With assistance, carefully lift the TV with the attached brackets and hook them onto the wall plate's arms.
2. Ensure the TV is securely seated on the mount.
3. Engage any safety locking mechanisms on the TV brackets to prevent accidental dislodging.



Image 5.3: Hanging the TV onto the installed wall mount.

6. Operation and Adjustments

The WHYFONE WF9113-B mount offers extensive flexibility for optimal viewing angles.

- **Extension/Retraction:** Gently pull or push the TV to extend it up to 655mm from the wall or retract it to 80mm.
- **Swivel:** The mount allows for a +/- 90° swivel to the left or right, depending on your TV size and wall clearance.
- **Tilt:** Adjust the vertical viewing angle by tilting the TV +5° upwards or -12° downwards to reduce glare. Loosen the tilt knobs, adjust, and then re-tighten.
- **Rotation:** This mount features a 180° rotation capability, allowing you to switch your TV between landscape and portrait orientations. Gently rotate the TV as needed.
- **Level Adjustment:** The mount offers +/- 90° level adjustment for fine-tuning the horizontal alignment after installation.

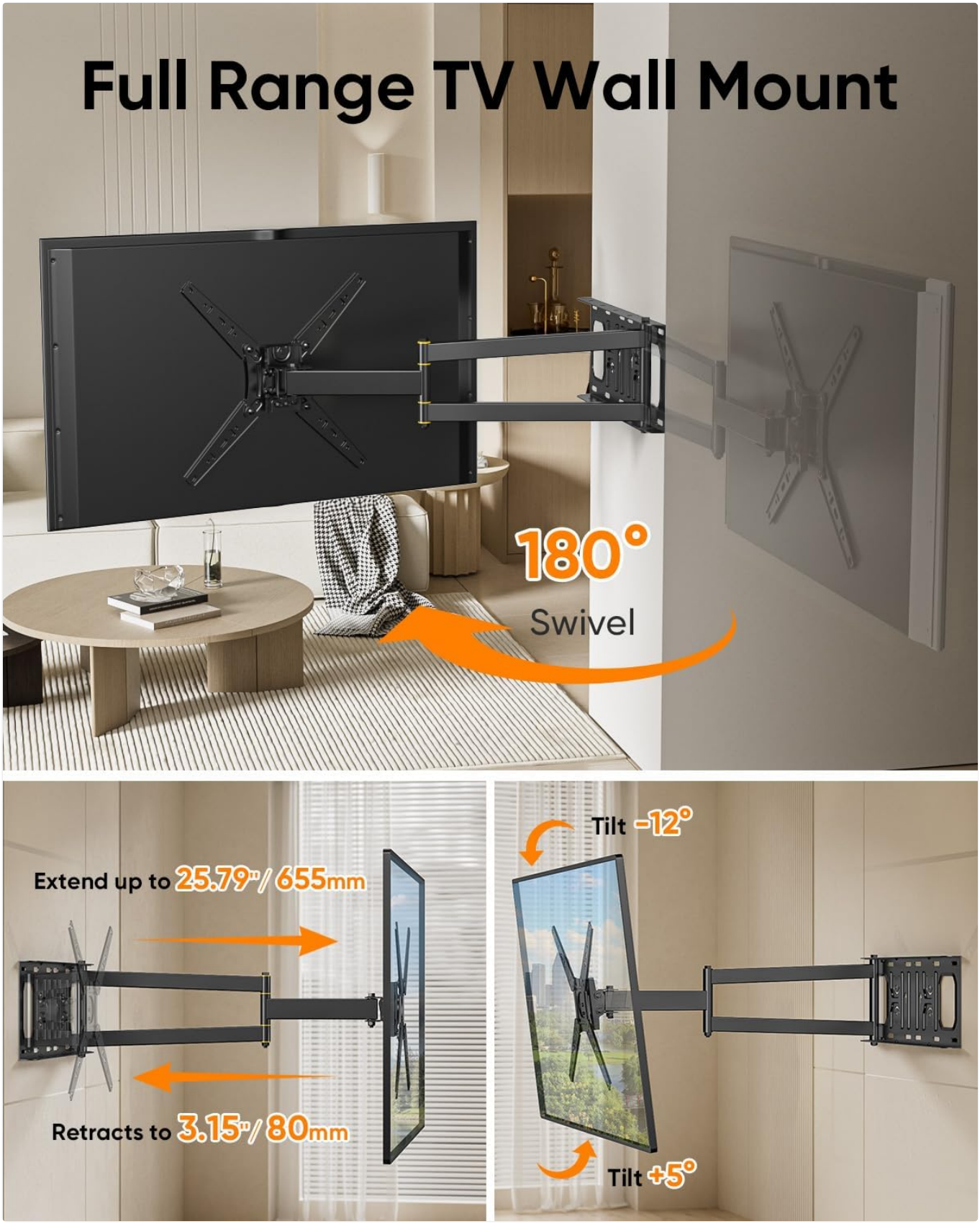

Image 6.1: Demonstrating the full motion capabilities: swivel, tilt, and extension.



Image 6.2: The 180-degree rotation feature for landscape or portrait viewing.

7. Maintenance

Regular maintenance ensures the longevity and safe operation of your TV wall mount.

- Periodically check all screws and connections to ensure they remain tight. Re-tighten if necessary.
- Clean the mount with a soft, dry cloth. Avoid abrasive cleaners or solvents.

- Inspect the mount for any signs of wear, damage, or corrosion. If any issues are found, discontinue use and contact customer support.
- Use the included cable ties to manage cables, preventing strain and entanglement.

8. Troubleshooting

Problem	Possible Cause	Solution
TV is not level	Wall plate or TV brackets are not level.	Use the built-in level adjustment feature to fine-tune the TV's horizontal position. If the wall plate is significantly off, you may need to re-mount it.
Mount feels unstable	Screws are loose, incorrect wall type, or overloaded.	Check all mounting screws for tightness. Ensure the mount is installed on a compatible wall type (solid concrete, wood stud, or brick). Verify your TV's weight does not exceed 35 kg (77 lbs).
Difficulty adjusting tilt/swivel	Adjustment knobs/bolts are too tight.	Loosen the relevant adjustment knobs or bolts slightly, make the adjustment, then re-tighten to secure the position.
Missing parts	Packaging error.	Do not proceed with installation. Contact WHYFONE customer support immediately for replacement parts.

9. Warranty and Support

WHYFONE is committed to providing high-quality products and excellent customer service. We stand behind our products.

- For any questions, concerns, or assistance with your product, please do not hesitate to contact WHYFONE customer support.
- Refer to your purchase documentation for specific warranty details.

Thank you for choosing WHYFONE.

Ask a question about this manual

Ask about setup, troubleshooting, compatibility, parts, safety, or missing instructions. Manuals+ will review the question and use this page's manual context to help answer it.

Name

Anonymous

Email

you@example.com

After a successful submission, we securely hash the supplied account or form email before sending it to Microsoft Advertising for conversion attribution. Privacy details.

Question

Example: How do I reset this device or fix this error?

Details

Model number, symptoms, what you tried, or the section of the manual you are using.

Submit question

Open the live page

https://manuals.plus/asin/B0F9NBCMKW

More documents and user manuals: **https://manuals.plus/**