Saved from manuals.plus.
Open the live page for links to other documents and user manuals.

GODIYMODULES Mod-DPDT12v-001

GODIYMODULES DC Motor Reverse Polarity Module Instruction Manual

Model: Mod-DPDT12v-001

1. Introduction

This manual provides detailed instructions for the GODIYMODULES DC Motor Reverse Polarity Module. This module is designed to control the forward and reverse rotation of a DC motor with adjustable delay times, utilizing a DPDT (Double Pole Double Throw) delay relay. It is suitable for various applications requiring timed motor direction control.

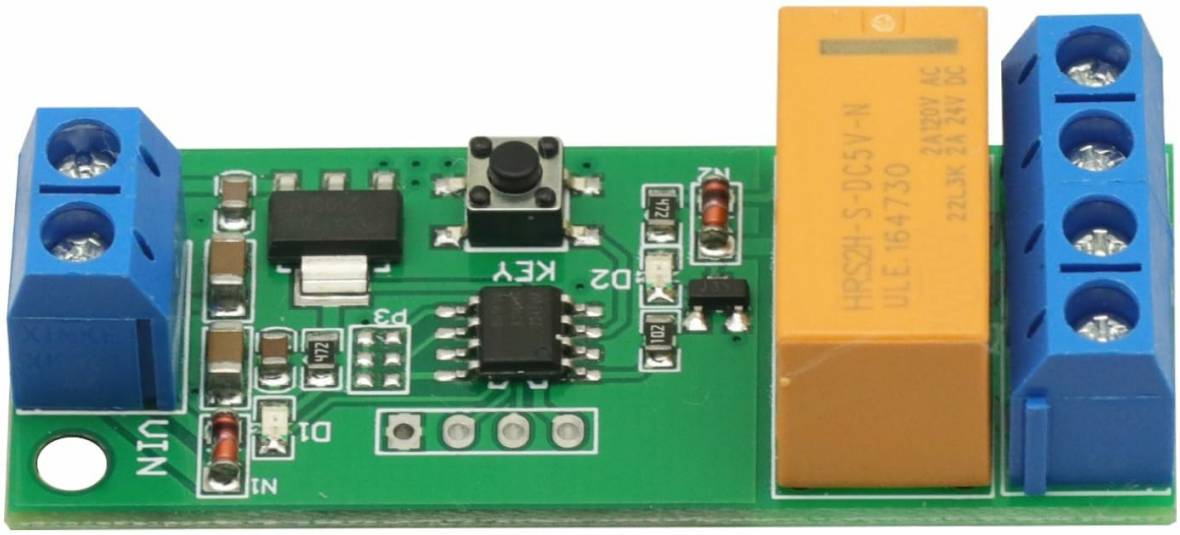

Image 1: Top view of the DC Motor Reverse Polarity Module, showing the relay, control button, and terminal blocks.

2. Features

- Adjustable time delay for both forward and reverse motor operation.
- Wide operating voltage range: DC 5V to 12V.
- High load capacity: Supports DC 1-48V or AC 85-265V with a maximum current of 2A.
- Precise timing adjustment from 0.1 seconds up to 5000 seconds per direction.
- Extended delay capability up to 40,000 seconds using the 'Time multiple selection' setting.
- Compact design for easy integration.

3. Specifications

Parameter	Value
Operating Voltage	DC 5-12V (5V, 6V, 9V, 12V)

Parameter	Value
Operating Current (5V)	Forward: 4mA, Reverse: 36mA
Operating Current (12V)	Forward: 6mA, Reverse: 44mA
Load Voltage	DC 1-48V or AC 85-265V
Load Current	Maximum 2A
Forward Max Time (T1)	5000 seconds (0.1 second step)
Reverse Max Time (T2)	5000 seconds (0.1 second step)
Maximum Delay (with multiplier)	Up to 40,000 seconds
Dimensions	54 x 22 x 15 mm (2.12 x 0.87 x 0.59 inches)
Weight	Approximately 15g
Mounting Type	PCB Mount

4. Setup and Wiring

Proper wiring is crucial for the correct operation of the module. Refer to the diagram below for connection details.

1. **Power Supply Connection:** Connect the positive terminal of your DC 5-12V power supply to the **VIN** terminal on the module. Connect the negative terminal of the power supply to the **GND** terminal.
2. **Motor Power Supply Connection:** Connect the positive terminal of the motor's power supply (DC 1-48V or AC 85-265V) to the **P+** terminal. Connect the negative terminal of the motor's power supply to the **P-** terminal.
3. **Motor Connection:** Connect one end of your DC motor to the **M+** terminal and the other end to the **M-** terminal.

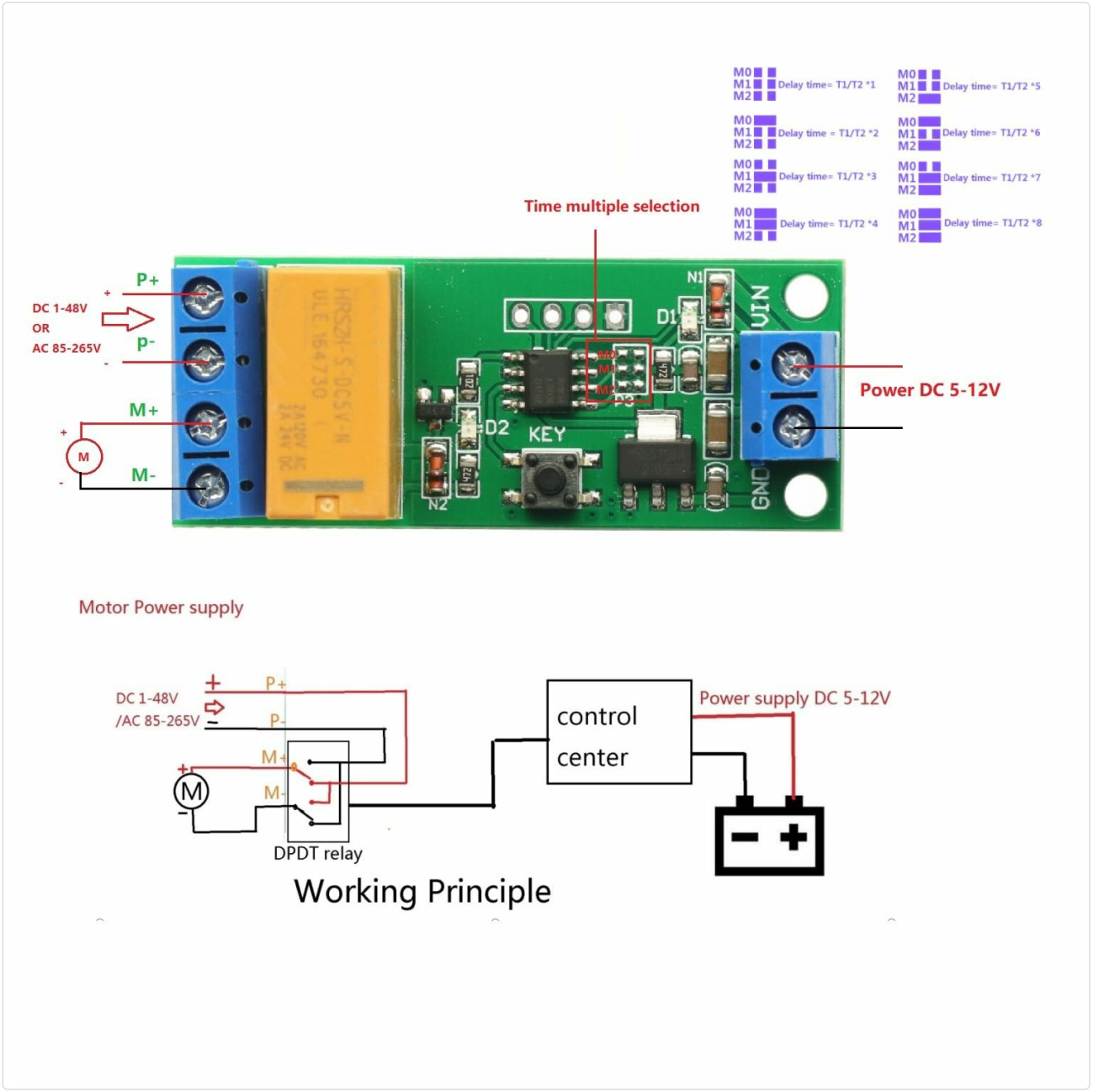

Image 2: Wiring diagram illustrating connections for the module's power, motor power, and the DC motor.

5. Operating Instructions

The module operates in a continuous forward-reverse cycle based on the set delay times. The 'KEY' button is used for setting these times.

5.1 Basic Operation Cycle

1. After power is applied, the module flashes 3 times, then turns off.
2. The **M+** terminal outputs positive, and **M-** outputs negative, causing the motor to rotate in the forward direction.
3. After a delay time **T1** (forward delay time), the module turns on.
4. The **M+** terminal outputs negative, and **M-** outputs positive, causing the motor to rotate in the reverse direction.
5. After a delay time **T2** (reverse delay time), the module turns off.
6. The cycle repeats from step 2.

5.2 Setting Delay Times (T1 and T2)

Follow these steps to set the forward (T1) and reverse (T2) delay times using the 'KEY' button:

1. **Enter Setup Mode:** After powering on, the module will be in 'work mode'. Press and hold the 'KEY' button for 2 seconds. The module will turn on, indicating entry into 'setup mode'.
2. **Set Forward Time (T1):**
    - While in 'setup mode' (module on), the current state is 'forward setup mode'.
    - Continuously trigger the 'KEY' button twice. The module will turn off, entering 'Standby timer mode'.
    - In 'Standby timer mode', trigger the 'KEY' button once to start timing (enter 'Timing Mode'). The module will flash, indicating it is timing.
    - Trigger the 'KEY' button again to stop the clock (exit 'Timing Mode'). The duration of the flashing time is now set as the forward time (T1).
3. **Set Reverse Time (T2):**
    - After setting T1, press and hold the 'KEY' button for 2 seconds. The module will turn on, entering 'Reverse setup mode'.
    - Continuously trigger the 'KEY' button twice. The module will turn off, entering 'Standby timer mode'.
    - In 'Standby timer mode', trigger the 'KEY' button once to start timing (enter 'Timing Mode'). The module will flash, indicating it is timing.
    - Trigger the 'KEY' button again to stop the clock (exit 'Timing Mode'). The duration of the flashing time is now set as the reverse time (T2).
4. **Exit Setup Mode:** Once both T1 and T2 are set, re-power the module to return to 'work mode' with the new timing parameters.

Note: The default adjustable range for T1 and T2 is 0.1 to 5000 seconds. By utilizing the 'Time multiple selection' setting (refer to Image 2 for visual indicators M0-M2), the maximum delay can be extended up to 40,000 seconds. Consult the module's silkscreen or specific product documentation for details on configuring the time multiplier jumpers.

6. Working Principle

The module operates based on a DPDT relay that switches the polarity of the voltage supplied to the motor. This allows for controlled forward and reverse motion. The internal microcontroller manages the timing for each direction (T1 for forward, T2 for reverse) and triggers the relay accordingly.

When the module is in the forward state, the motor receives power with a specific polarity. After the programmed T1 delay, the microcontroller activates the relay to switch the output polarity, causing the motor to reverse direction. This reverse state lasts for the programmed T2 delay, after which the relay switches back, and the cycle repeats. This continuous switching provides an automated, timed bidirectional control for DC motors.

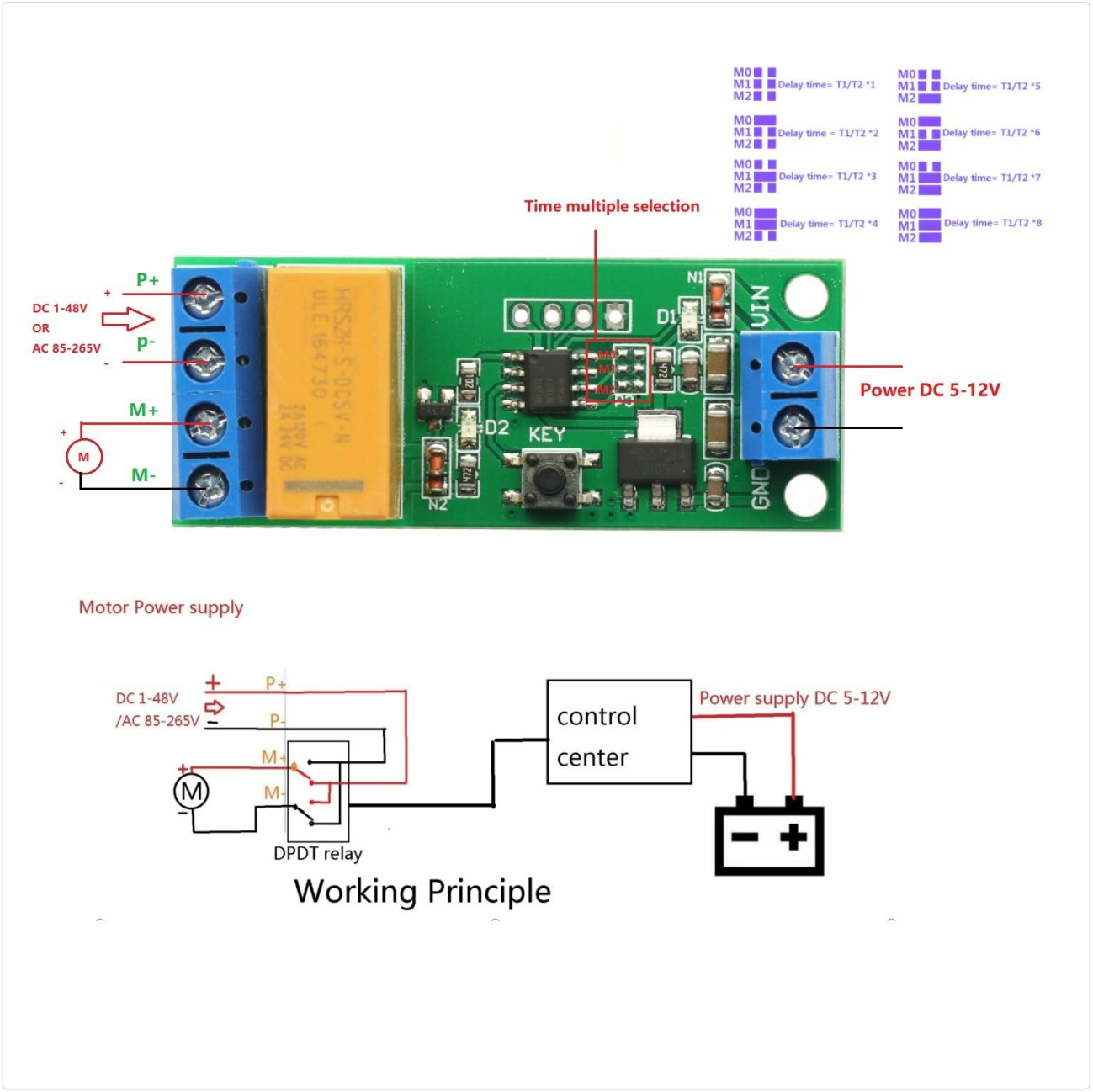

Image 3: Diagram illustrating the working principle, showing the DPDT relay controlling motor direction based on power supply and control signals.

7. Maintenance

This module is designed for reliable operation with minimal maintenance. To ensure longevity and proper function:

- Keep the module clean and free from dust and debris.
- Avoid exposing the module to excessive moisture or extreme temperatures.
- Ensure all connections are secure and free from corrosion.
- Do not exceed the specified operating voltage and current limits.

8. Troubleshooting

If the module does not function as expected, consider the following:

- **No Power/Module Not Responding:** Verify that the VIN and GND connections are correct and that the power supply is providing the specified DC 5-12V.

- **Motor Not Rotating:** Check the motor's power supply (P+ and P- connections) and ensure the motor itself is functional. Confirm M+ and M- connections to the motor are secure.
- **Incorrect Timing:** Re-enter the setup mode and carefully follow the steps to set T1 and T2. Ensure the 'KEY' button presses are distinct and timed correctly during the setup process.
- **Motor Rotates in Only One Direction:** Check all wiring, especially the M+ and M- connections to the motor, and ensure the DPDT relay is functioning. Re-verify T1 and T2 settings.
- **Overheating:** Ensure the load current does not exceed the maximum 2A. Reduce the load if necessary.

9. Warranty and Support

Specific warranty information for the GODIYMODULES DC Motor Reverse Polarity Module is not provided in this document. For warranty claims, technical support, or further assistance, please refer to the product's purchase documentation or contact your retailer.

Ask a question about this manual

Ask about setup, troubleshooting, compatibility, parts, safety, or missing instructions. Manuals+ will review the question and use this page's manual context to help answer it.

Name

Anonymous

Email

you@example.com

After a successful submission, we securely hash the supplied account or form email before sending it to Microsoft Advertising for conversion attribution. Privacy details.

Question

Example: How do I reset this device or fix this error?

Details

Model number, symptoms, what you tried, or the section of the manual you are using.

Submit question

Open the live page

https://manuals.plus/asin/B0F3BZY6WG

More documents and user manuals: **https://manuals.plus/**