Manuals+
Q & A | Deep Search | Upload

RADIOMASTER MT12

RADIOMASTER MT12 Surface Radio Controller Instruction Manual

Model: MT12 (4in1 with R85C Receiver)

1. Introduction and Overview

The RADIOMASTER MT12 is an advanced open-source surface radio controller, designed for a wide range of RC surface models including cars, trucks, and boats. It is officially supported by EdgeTX, ExpressLRS, and the Multi-module project, offering extensive customizability and versatile operation.

This manual provides essential information for setting up, operating, and maintaining your MT12 controller to ensure optimal performance and longevity.

2. Product Features

- **Internal RF Modules:** Available with built-in ExpressLRS or 4in1 Multi-Protocol (MPM) RF modules.
- **Processor:** Features a powerful STM32F407VGT6 with 1MB Flash.
- **Operating System:** Preinstalled with EdgeTX firmware for advanced mixing and programmability.
- **Charging:** QC3.0 fast charging supporting 2.0A MAX via USB-C.
- **Ergonomics:** Compact design with excellent ergonomics for comfortable handling.
- **Battery Compartment:** Oversized compartment supports 2 x 18650 cells or a 2S 7.4V 5000mAh battery pack (batteries not included).
- **Module Bay:** Standard Nano module compartment compatible with RadioMaster Ranger Nano Module, RadioMaster RM 4in1 module, and TBS Crossfire Nano module.
- **Antenna:** Rotatable antenna for optimized signal.
- **Customization:** Customizable base switches or 4-way joystick included.
- **Control Channels:** 16 channels as standard, expandable to 32 channels (4in1 only, requires additional 4in1 RF module and compatible receivers).
- **Display:** 128x64 Monochrome LCD for clear information display.

- **Sensors:** Hall-effect wheel and trigger sensors for precise control.

3. Package Contents

- 1 x MT12 Surface Radio (4in1 Version)
- 1 x R85C Receiver
- 1 x Dual Switch Expansion module
- 1 x 4 Way Joystick Expansion module
- 1 x Nano Adapter
- 1 x USB-C Cable
- 1 x Leather Lanyard
- 1 x Custom RadioMaster signature carry case
- 1 x 18650 Battery Tray
- 1 x Screen Protector
- 1 x Stickers
- 1 x Manual

Figure 3.1: Complete package contents of the Radiomaster MT12 Surface Radio Controller.

This image displays the MT12 Surface Radio Controller along with its accessories, including the R85C receiver, dual switch and 4-way joystick expansion modules, Nano adapter, USB-C cable, leather lanyard, custom carry case, 18650 battery tray, screen protector, stickers, and the instruction manual.

4. Product Overview

4.1 Controller Components

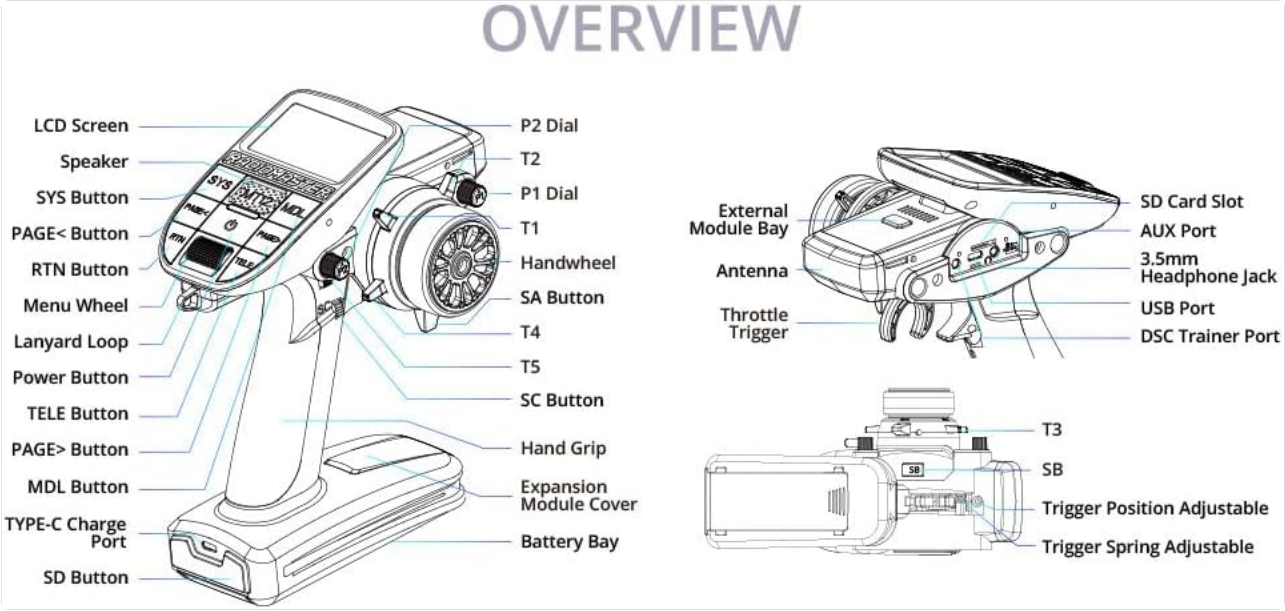

Figure 4.1: Detailed diagram of the MT12 controller with all major components labeled.

This diagram illustrates the various parts of the MT12 controller, including the LCD screen, speaker, buttons (SYS, PAGE<, RTN, Power, PAGE>, MDL, TELE, SD), P1/P2 dials, T1/T2/T3/T4/T5 switches, SA/SB/SC buttons, handwheel, hand grip, lanyard loop, TYPE-C charge port, SD button, external module bay, antenna, throttle trigger, USB port, AUX port, 3.5mm headphone jack, DSC trainer port, trigger position adjustment, and trigger spring adjustment.

Figure 4.2: Front-left perspective view of the MT12 controller.

This image provides a clear view of the front and left side of the MT12 controller, showcasing the screen, main control buttons, and the steering wheel.

Figure 4.3: Right-side view of the MT12 controller.

This image highlights the right side of the MT12 controller, focusing on the steering wheel, throttle trigger, and accessible switches.

Figure 4.4: Rear view of the MT12 controller.

The rear view of the MT12 controller shows the battery compartment cover and the USB-C charging port at the base.

Figure 4.5: Close-up of the adjustable throttle trigger.

This close-up image details the throttle trigger mechanism, including the screws for adjusting its position and spring tension.

Figure 4.6: Close-up of the LCD screen and control buttons.

This image provides a detailed view of the MT12's monochrome LCD screen and the surrounding control buttons, which are used for menu navigation and settings adjustments.

4.2 Physical Dimensions

Figure 4.7: Dimensional drawing of the MT12 controller.

The diagram shows the physical dimensions of the MT12 Surface Radio Controller: 177.8mm (height) x 118.4mm (width) x 207.8mm (depth).

5. Specifications

5.1 MT12 Surface Radio

- **Physical Dimensions:** 177.8 x 118.4 x 207.8 mm
- **Weight:** 480 grams
- **Operating Frequency:** 2.400GHz-2.480GHz
- **Internal RF Options:** 4-in-1 multi-protocol / ELRS 2.4GHz
- **Supported Protocols:** Module dependent
- **Operational Current:** 160mA for 4in1 / 320mA for ELRS
- **Operational Voltage:** DC 6.6-8.4V
- **Operating System:** EdgeTX
- **Control Channels:** 16 standard, expandable to 32 (4in1 only)
- **Display:** 128x64 Monochrome LCD
- **Battery:** 2 x 18650 cells or a 2S 7.4V 5000mAh battery pack (not included)
- **Charging:** Built-in USB-C Charging
- **Firmware Upgrade:** Via USB or SD card
- **Wheel and Trigger Sensor:** Hall-effect
- **Module Bay:** Nano size (RadioMaster Ranger Nano Module / RadioMaster RM 4in1 module / TBS Crossfire Nano module)

5.2 R85C Receiver (Included with 4in1 version)

- **Power Supply:** DC 4.5 - 8.4V
- **Frequency Range:** 2400-2483.5Mhz
- **Support Protocol:** D8/D16/SFHSS
- **Output Channel:** 5CH PWM
- **Antenna Type:** High-sensitivity 2.4G antenna
- **Telemetry Power:** 100mW / 20dBm
- **Weight:** 5.7 grams
- **Dimensions:** 31.0 x 18.5 x 13.0 mm

6. Setup

6.1 Battery Installation

The MT12 controller uses 2 x 18650 cells or a 2S 7.4V 5000mAh battery pack. Ensure correct polarity when inserting batteries into the provided tray or connecting a LiPo pack.

6.2 Binding the Receiver

To establish communication between the MT12 controller and the R85C receiver, a binding process is required. Refer to the detailed steps in the included manual for your specific receiver type (R85C or ER3C-i).

For receivers with built-in gyro functionality, ensure the gyro is activated and configured correctly after binding. The sensitivity of the gyro can often be adjusted via a potentiometer on the receiver or through the controller's menu.

Video 6.1: Demonstrates the process of setting up the gyro function on an RC receiver, including binding and phase correction. This video uses a Radiolink R6FG/R7FG/R4FGM receiver, which has similar gyro functionality to the MT12's included receivers.

This video illustrates how to activate and configure the gyro function on a compatible receiver. It covers switching the receiver to gyro mode, checking the gyro phase, and adjusting sensitivity. While the video features a Radiolink receiver, the principles for gyro setup are generally applicable to the MT12's R85C or ER3C-i receivers.

7. Operating

7.1 Basic Controls and Adjustments

The MT12 controller features a standardized button layout for intuitive operation. The LCD screen provides real-time information and access to various settings. Use the navigation buttons and dials to adjust parameters such as steering trim, throttle trim, dual rates, and exponential curves.

Video 7.1: Overview of the GoolRC Flysky Noble NB4+ transmitter, demonstrating its features and menu navigation. This video provides a general understanding of advanced RC controller functionalities that may be similar to the EdgeTX system on the MT12.

This video showcases the features and menu system of a similar advanced RC transmitter. It highlights aspects like internal battery design, USB-C interface, trainer mode support, and customizable UI. While not the MT12, it offers insights into the capabilities and user experience of modern RC controllers.

Video 7.2: A promotional video for the Xiangtat Radiomaster MT12 Surface Radio Controller, highlighting its key features and design. This video provides a visual overview of the product's physical attributes and some of its core functionalities.

This video provides a visual demonstration of the MT12 Surface Radio Controller, showcasing its design, button layout, and key features like the EdgeTX operating system, internal RF modules, Hall sensors, and customizable inputs. It offers a good visual reference for the controller's capabilities.

7.2 Advanced Settings (EdgeTX)

The EdgeTX firmware allows for advanced programming, including:

- **Model Memory:** Store up to 30 different model configurations.
- **Dual Rates (D/R):** Adjust the maximum travel of steering and throttle channels.
- **Exponential (EXP):** Fine-tune the sensitivity around the center stick position for smoother control.
- **ABS Braking:** Program an Anti-lock Braking System to prevent wheel lock-up during hard braking, improving control.
- **Channel Reversing:** Reverse the direction of any channel to match your servo setup.
- **End Points (EPA):** Set the maximum travel limits for each servo.
- **Telemetry:** Monitor battery voltage, signal strength (RSSI), and other data from compatible receivers.

Video 7.3: A detailed review of the Flysky FS-G11P transmitter, showcasing its design, features, and menu options. This video provides a comprehensive look at the functionalities and user interface of a modern RC controller, which can be helpful for understanding the MT12's capabilities.

This video offers an in-depth look at the features and menu system of the Flysky FS-G11P transmitter. It covers aspects like design, controls, battery installation, and menu navigation for various settings such as reversing channels, adjusting end points, and setting up ABS braking. While a different brand, the demonstrated functionalities are common in advanced RC controllers like the MT12.

8. Maintenance

- **Cleaning:** Regularly clean the controller with a soft, dry cloth. Avoid using harsh chemicals or solvents.
- **Storage:** Store the controller in a cool, dry place away from direct sunlight and extreme temperatures. Remove batteries if storing for extended periods.
- **Firmware Updates:** Periodically check the RADIOMASTER website for firmware updates to ensure optimal performance and access to new features. Updates can be performed via USB or SD card.
- **Battery Care:** Follow proper charging and discharge procedures for your chosen battery type (18650 cells or LiPo pack) to maximize battery life and safety.

9. Troubleshooting

- **No Power:** Check battery installation and charge level. Ensure the power switch is in the ON position.
- **No Signal/Binding Issues:** Re-perform the binding procedure. Ensure the receiver is powered on and within range. Check for interference.
- **Incorrect Servo Movement:** Verify channel reversing and end point settings in the EdgeTX menu. Check servo connections.
- **Gyro Malfunction:** Ensure the gyro is correctly enabled and its phase is set according to the car's movement. Adjust gyro sensitivity as needed.
- **Controller Unresponsive:** Attempt a factory reset if persistent issues occur (refer to the full manual for factory reset procedures).

10. Warranty and Support

Please refer to the instruction manual before use for detailed warranty information and support contacts. For technical assistance or warranty claims, contact RADIOMASTER customer support or your authorized dealer.